Table of Contents

Body Systems **0-1**
- Fixed and Moveable Windows 0-2
- Horns and Pedestrian Alerts 0-9
- Lighting 0-12
- Mirrors 0-46
- Trailering Systems 0-52
- Vehicle Access 0-66
- Wipers and Washers 0-84

Brakes **1-1**
- Antilock Brake System 1-2
- Disc Brakes 1-11
- Hydraulic Brakes 1-14

Diagnostic Overview, Starting Point, and Programming **2-1**
- Programming and Setup 2-4
- Vehicle Diagnostic Information 2-74

Driver Information and Entertainment **3-1**
- Cellular, Entertainment, and Navigation 3-2
- Displays and Gauges 3-36
- Image Display Cameras 3-44
- Secondary and Configurable Customer Controls 3-52

Engine/Propulsion **4-1**
- Starting, Charging, and Low Voltage Energy Storage 4-2

HVAC **5-1**
- HVAC - Automatic 5-2

Power and Signal Distribution **6-1**
- Data Communications 6-2
- Electrical Component and Inline Harness Connector End Views 6-36
- Electrical Component Locator and Harness Routing Views 6-744
- Power Outlets 6-810
- Wiring Systems and Power Management 6-820

Safety and Security **7-1**
- Driver Assistance Systems 7-3
- Driver Monitoring and Occupant Detection 7-38
- Immobilizer 7-43
- Parking Assistance Systems 7-47
- Remote Functions 7-57
- Seat Belts 7-69
- Supplemental Restraints 7-74
- Theft Deterrent 7-83

Seats **8-1**
- Power Seats 8-2
- Seat Heating and Cooling 8-20

Steering **9-1**
- Power Steering 9-2
- Steering Wheel and Column 9-5

Transmission **10-1**
- Automatic Transmission - 10L80 10-2
- Electronic Transmission Range Select 10-8
- Transfer Case - MP 3015 10-11
- Transfer Case - MP 3025 10-25

Index **11-1**

Section 0

Body Systems

Fixed and Moveable Windows **0-2**
Schematic and Routing Diagrams **0-2**
Moveable Window Schematics 0-3
Defogger Schematics 0-6
Description and Operation **0-7**
Power Windows Description and Operation 0-7
Rear Window Defogger Description and Operation 0-7
Horns and Pedestrian Alerts **0-9**
Schematic and Routing Diagrams **0-9**
Horn Schematics 0-10
Description and Operation **0-11**
Horns System Description and Operation 0-11
Lighting **0-12**
Schematic and Routing Diagrams **0-12**
Headlights/Daytime Running Lights (DRL) Schematics 0-13
Fog Lights Schematics 0-16
Exterior Lights Schematics 0-17
Interior Lights Schematics 0-28
Interior Lights Dimming Schematics 0-34
Description and Operation **0-40**
Exterior Lighting Systems Description and Operation 0-40
Interior Lighting Systems Description and Operation 0-44
Mirrors **0-46**
Schematic and Routing Diagrams **0-46**
Inside Rearview Mirror Schematics 0-47
Outside Rearview Mirror Schematics 0-48
Description and Operation **0-51**
Outside Mirror Description and Operation 0-51
Trailering Systems **0-52**
Schematic and Routing Diagrams **0-52**
Trailering Systems Schematics 0-53
Description and Operation **0-58**
Trailering Description and Operation 0-58
Vehicle Access **0-66**
Schematic and Routing Diagrams **0-66**
Door Lock/Indicator Schematics 0-67
Release Systems Schematics 0-72
Hood Latch Schematics 0-75
Liftgate Schematics 0-76
Description and Operation **0-78**
Door Ajar Indicator Description and Operation 0-78
Fuel Fill Door Description and Operation 0-78
Hood Ajar Indicator Description and Operation 0-78
Liftgate Ajar Indicator Description and Operation 0-79
Liftgate Ajar Indicator Description and Operation 0-79
Liftgate Description and Operation 0-79
Liftgate Description and Operation 0-80
Power Door Locks Description and Operation 0-82
Wipers and Washers **0-84**
Schematic and Routing Diagrams **0-84**
Wiper/Washer Schematics 0-85
Description and Operation **0-89**
Wiper/Washer System Description and Operation 0-89

Body Systems

Fixed and Moveable Windows

Schematic and Routing Diagrams

6613267

Moveable Window Schematics (Driver)

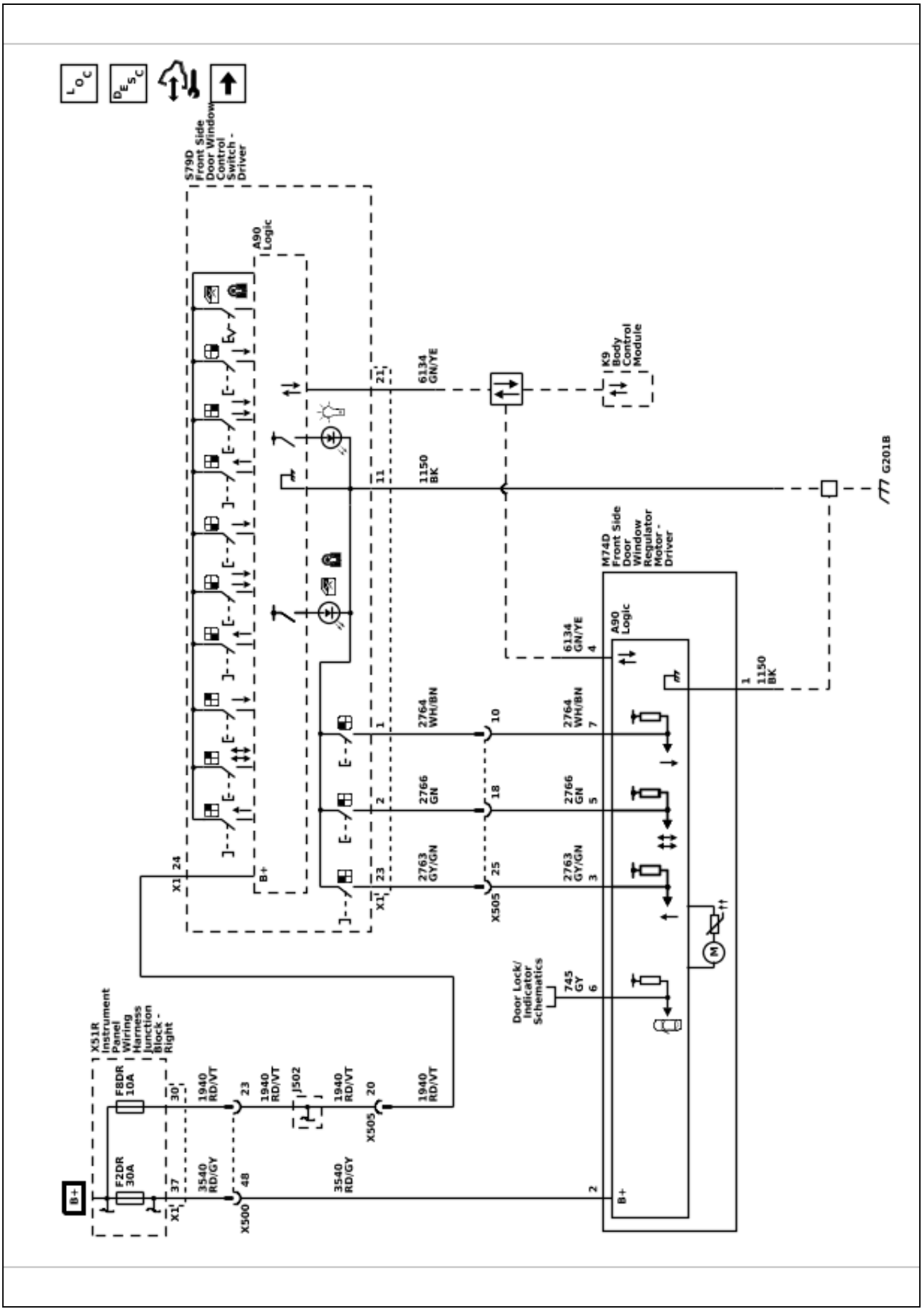

6613268

Moveable Window Schematics (Passenger)

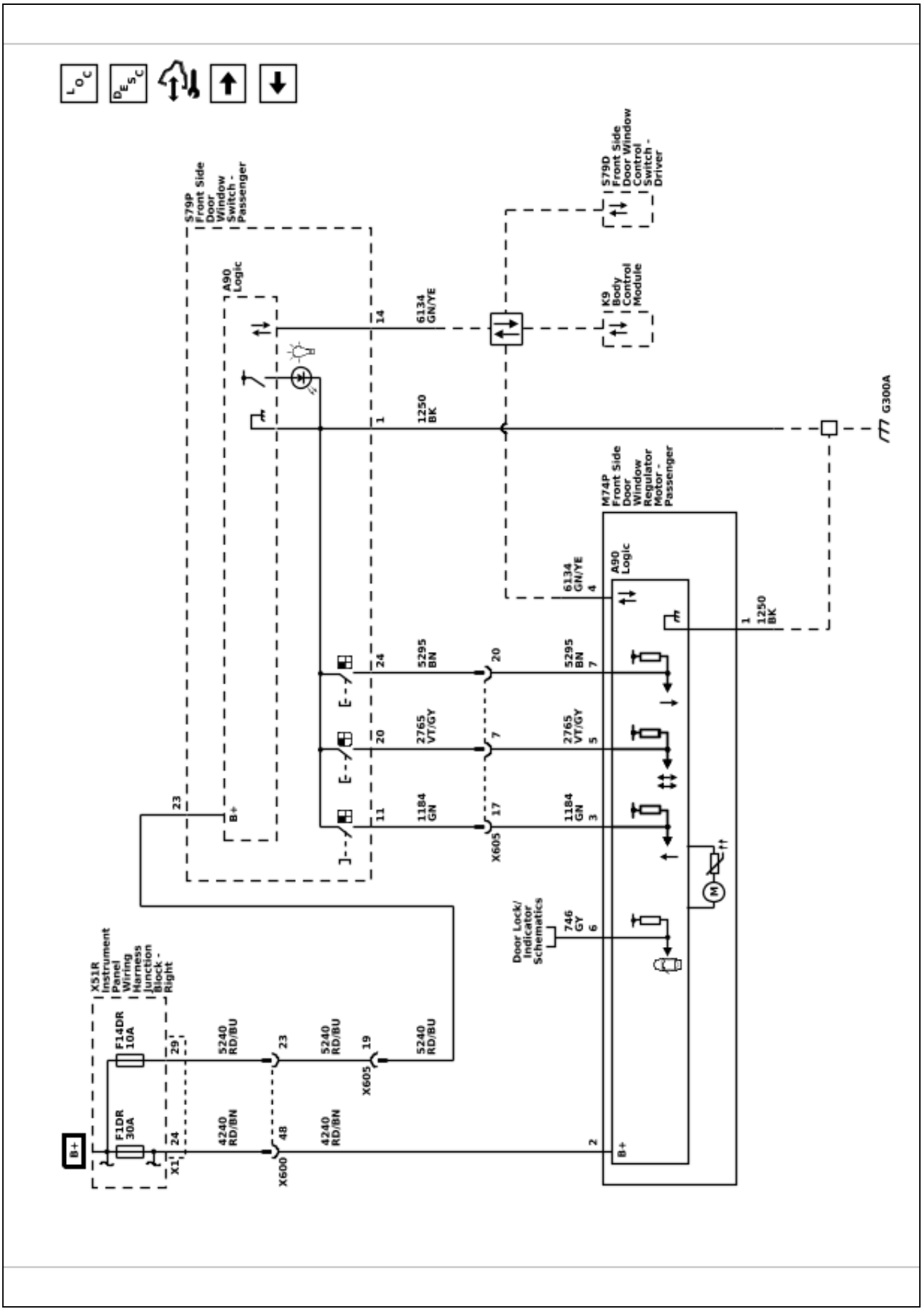

6613269

Moveable Window Schematics (Rear Windows)

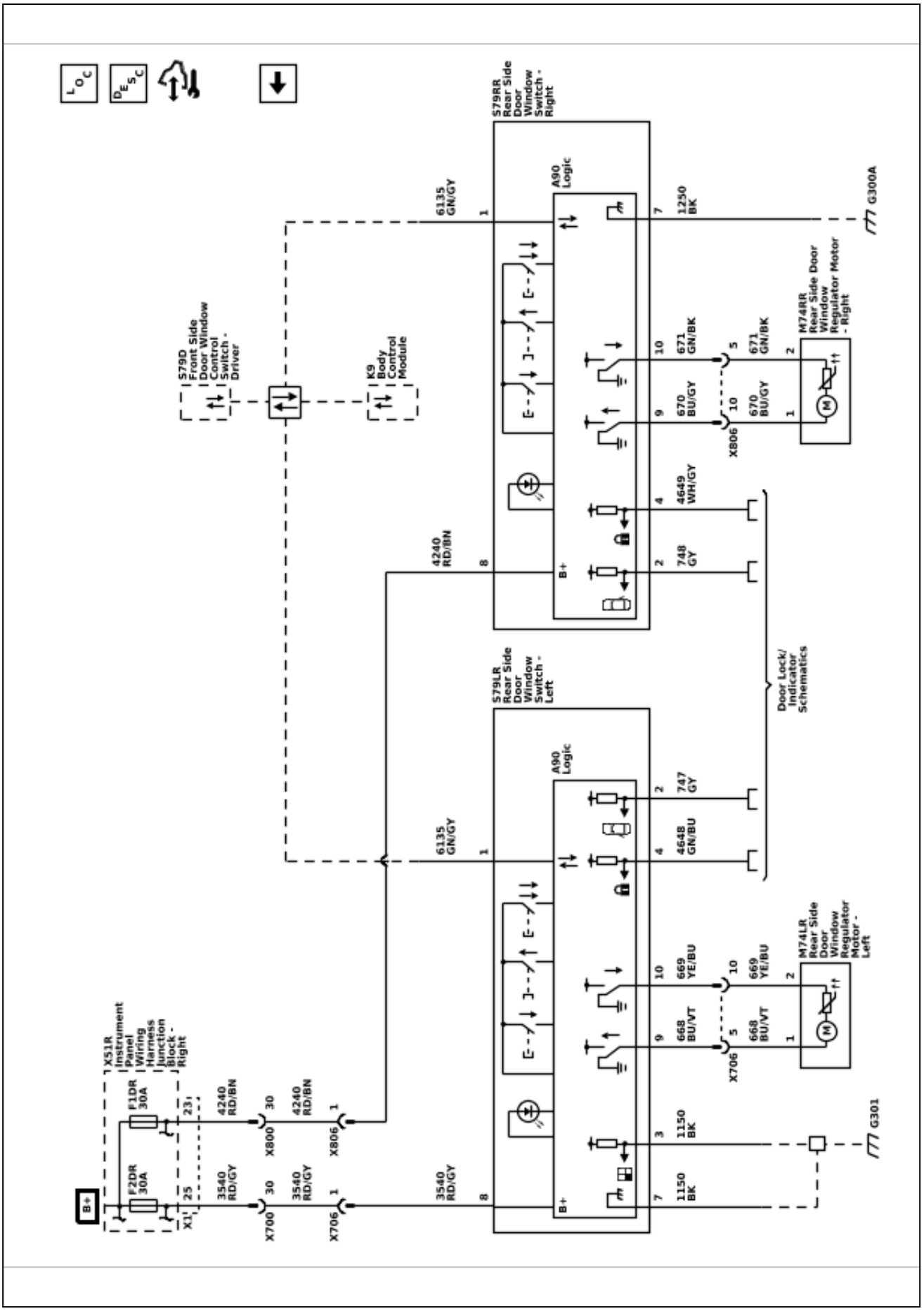

Defogger Schematics (Defogger)

6613270

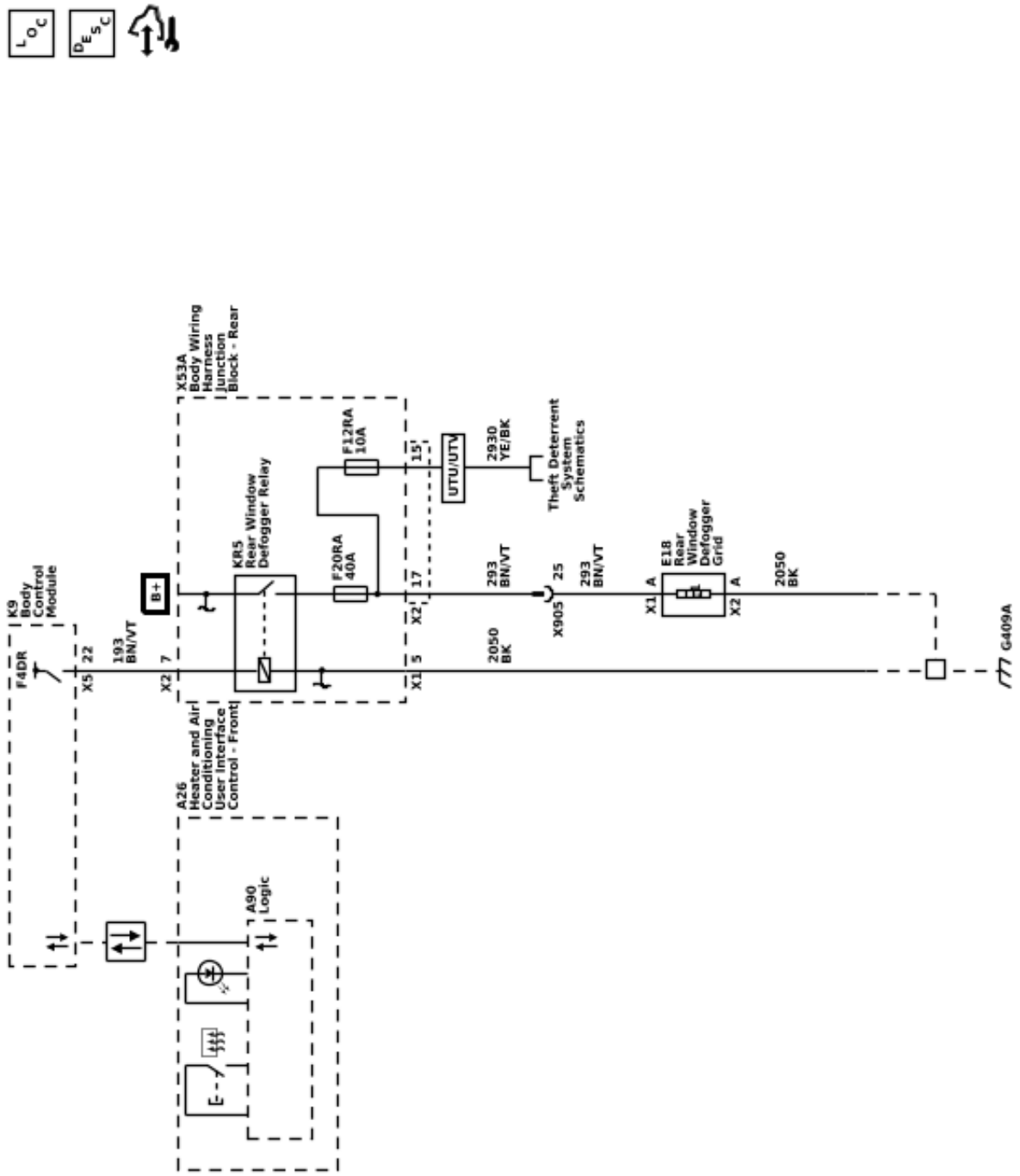

Description and Operation

Power Windows Description and Operation

Power Windows System Components

The power window system consists of the following components:

- Driver front side door window control switch
- Passenger front side door window control switch
- Left rear side door window switch
- Right rear side door window switch
- Window motors in each of the doors
- Body control module (BCM)

Driver and Passenger Express Up and Express Down Power Window Motors

The driver and passenger doors contain a smart window motor that will detect excessive resistance while performing the express up function and automatically reverse direction to prevent injury to any occupants that may become trapped between the closing window and the door frame. The automatic reverse safety feature can be overridden by pulling and holding the window switch.

The logic circuits within the window motor monitor the up, down and express signal circuits which are normally equal to B+ voltage. When a switch is used on the front side door window control switch, the contacts close causing a voltage drop within the appropriate signal circuit. The window motor will detect the voltage drop and will command the window to move in the direction requested.

The driver front side door window control switch communicates to the BCM by a serial data circuit. When the driver wishes to control the passenger window, the driver will use the appropriate switch on the driver front side door window control switch. When this switch is used, a serial data message is sent to the BCM requesting the passenger window motor command, the BCM will then send a serial data message to the passenger window motor which will then move in the direction requested.

Left Rear, Right Rear Express Down Window Motors

For the left rear and right rear doors, when their window switch is pressed in the down position, battery positive voltage is applied to their respective window motor control circuit and ground to the other window motor control circuit causing that window to open. When the individual window switch is pulled in the up position, voltage and ground is applied to the window motor in the opposite direction causing that window to close. The return path to ground is supplied through the inactive control circuit being normally grounded through the window switch.

Each rear side door window switch communicates to the BCM by a serial data circuit. When the driver wishes to control the left rear or right rear window, the driver will use the appropriate switch on the driver front side door window control switch. When this switch is used, a serial data message is sent to the BCM requesting a window motor command, the BCM will then send a serial data message to the appropriate rear side door window switch which will then command that window to move in the direction requested.

Lockout Switch Feature

The driver front side door window control switch contains a window lockout switch, when the driver presses the window lockout switch, a serial data message is sent to the BCM which will send a disable command to the rear side door window switches, deactivating them. The rear windows will still function normally from the switches on the driver front side door window control switch.

Rear Window Defogger Description and Operation

Rear Window Defogger System Components

The rear window defogger system consists of the following components:

- Body Control Module
- Front Heater and Air Conditioning User Interface Control
- Rear Body Wiring Harness Junction Block (Contains PCB Rear Defogger Relay
- Rear Defogger Grid
- 40A Fuse

Rear Window Defogger Operation

The rear defog control system utilizes a single zone backlight design, driven with a single relay configuration. A switch for the customer to control the system is provided within the front heater and air conditioning user interface control. Also included in the front heater and air conditioning user interface control is an indicator to inform the customer with the current state of the system. The system is only operational when engine is running or during remote start.

Pressing the heated rear window switch causes the front heater and air conditioning user interface control to send a serial data message to the body control module requesting rear window defog operation. The body control module upon receipt of the serial data message will provide voltage to the coil side of the rear defogger relay, this will energize the relay causing the relay switch contacts to close allowing B+ voltage to flow through the rear defogger grid control circuit to the rear defogger grid.

When the rear heated rear window switch is pressed and the engine is running, the rear window defogger grid will activate and will turn off automatically depending upon the vehicle speed (refer to owner's manual for rear window defogger operation cycles)

Horns and Pedestrian Alerts

Schematic and Routing Diagrams

Horn Schematics (Horn)

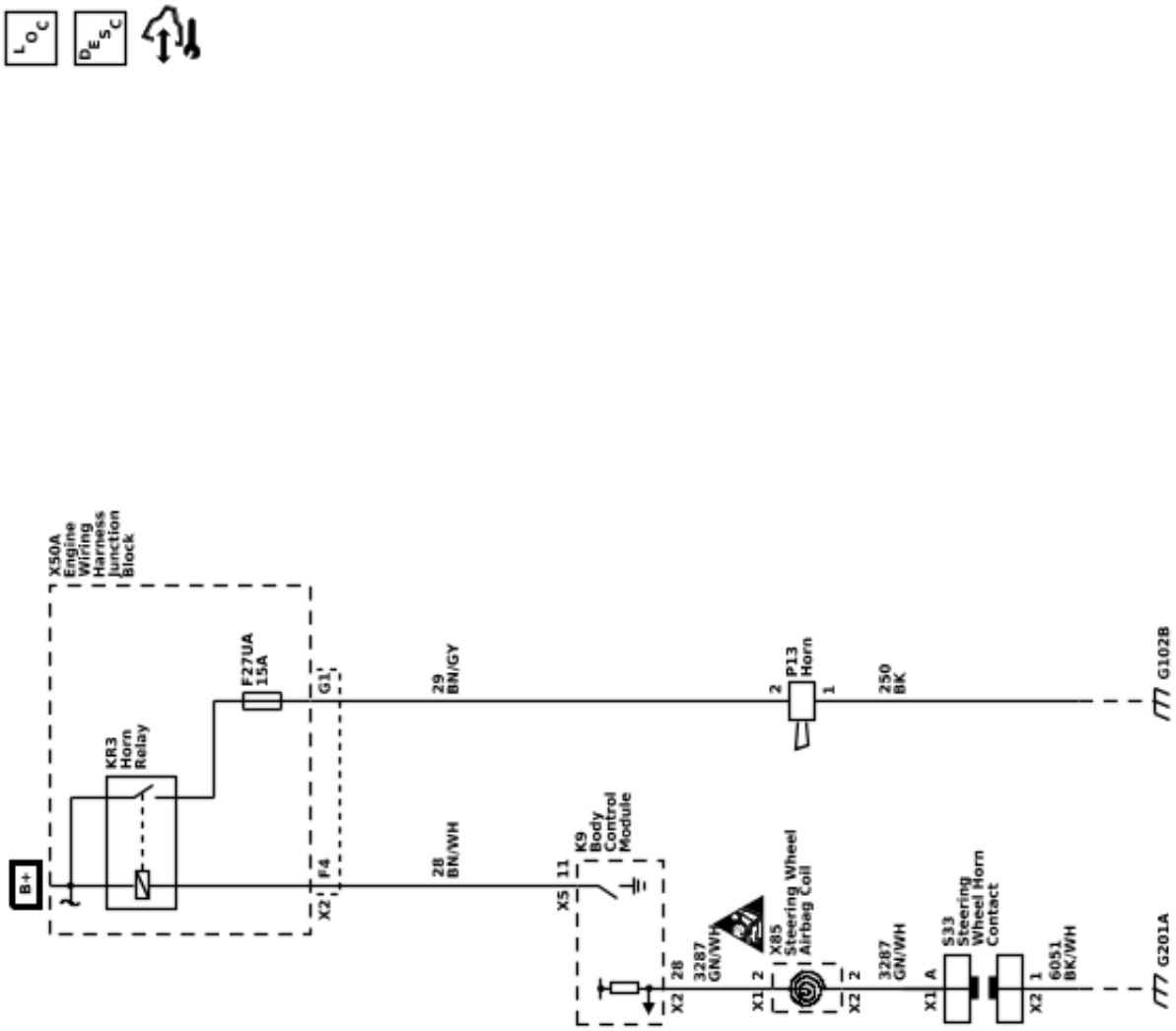

6613271

Description and Operation

Horns System Description and Operation

System Description

The horn system consists of the following components:

- HORN fuse
- Engine wiring harness junction block (contains horn PCB relay)
- Steering wheel horn contact
- Steering wheel airbag coil
- Horn
- Body control module (BCM)

System Operation

The vehicle horn system is activated under the following conditions:

- When the horn switch is depressed
- The BCM commands the horns ON under any of the following conditions:
  - When the content theft deterrent system detects a vehicle intrusion.
  - When the panic button is depressed on the remote control door lock transmitter—For further information refer to *Keyless Entry System Description and Operation 7-64*.
  - When the keyless entry system is used to lock the vehicle, a horn chirp may sound to notify the driver that the vehicle has been locked. The notification feature may be enabled or disabled through personalization. For further information refer to *Keyless Entry System Description and Operation 7-64*.
  - When the OnStar® system is used to sound the horns if equipped—For further information, refer to *OnStar Description and Operation 3-21*.

Circuit Operation

Battery positive voltage is applied at all times to the horn relay coil and the horn relay switch. Pressing either of the horn switches applies ground to the horn relay control circuit. The BCM may also apply ground to the horn relay control circuit as described above. When the horn relay control circuit is grounded, the horn relay is energized and battery positive voltage is applied to the horns through the horn control circuit. The horns sound as long as ground is applied to the horn relay control circuit.

Lighting

Schematic and Routing Diagrams

6613272

Headlights/Daytime Running Lights (DRL) Schematics (Controls and Indicators)

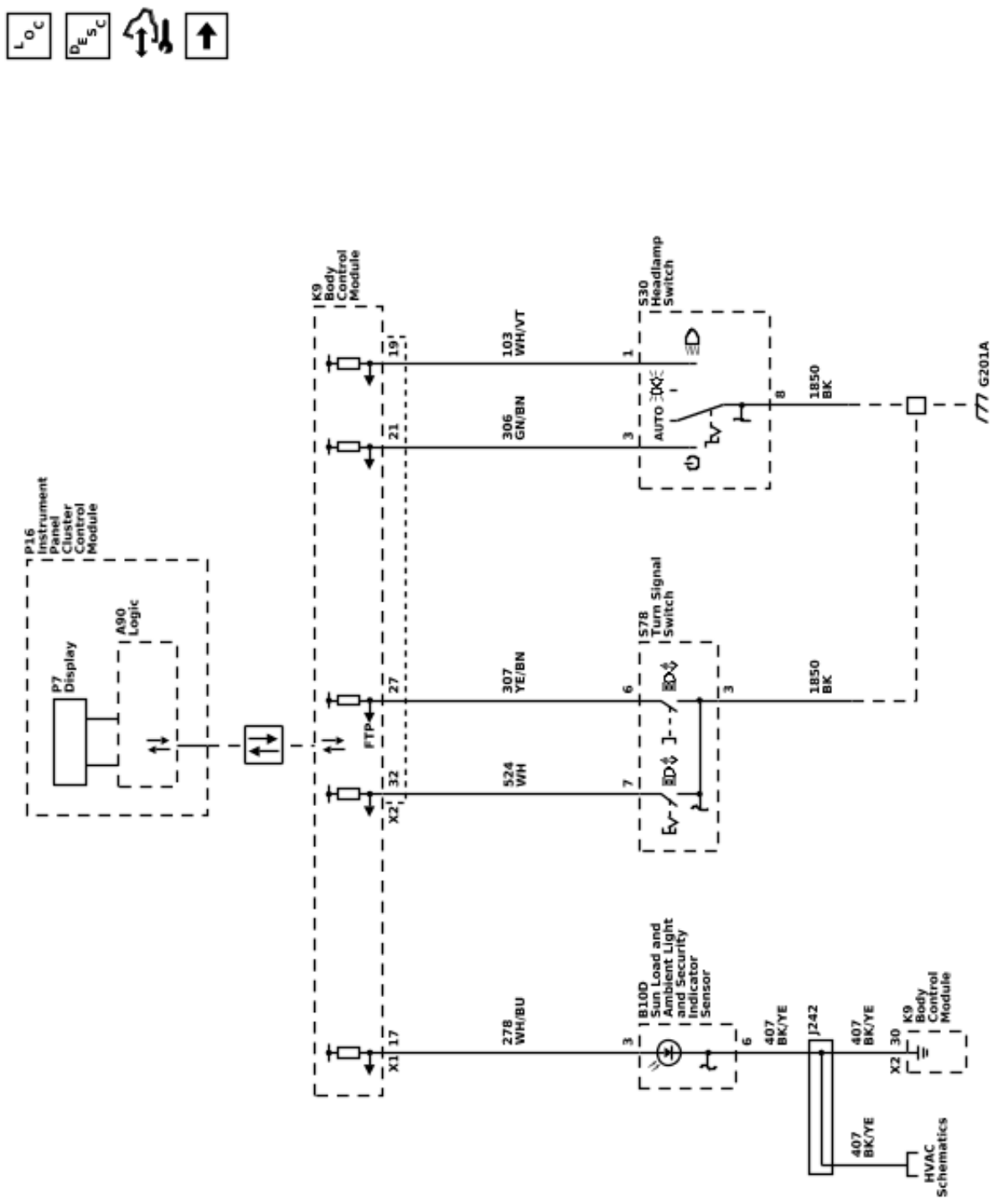

Headlights/Daytime Running Lights (DRL) Schematics (Headlamps and Daytime Running Lamps - Left)

6613273

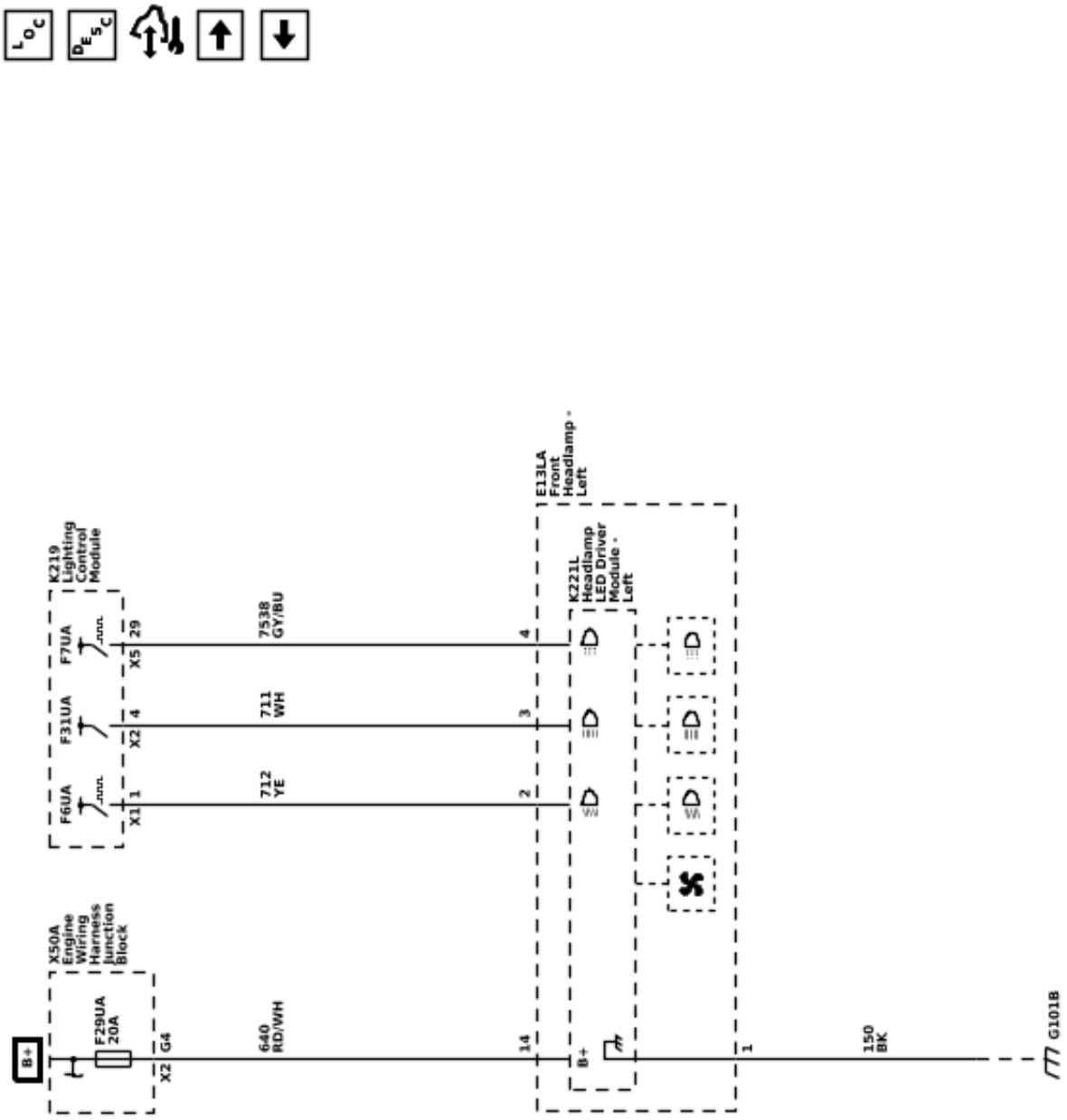

Headlights/Daytime Running Lights (DRL) Schematics (Headlamps and Daytime Running Lamps - Right)

6613274

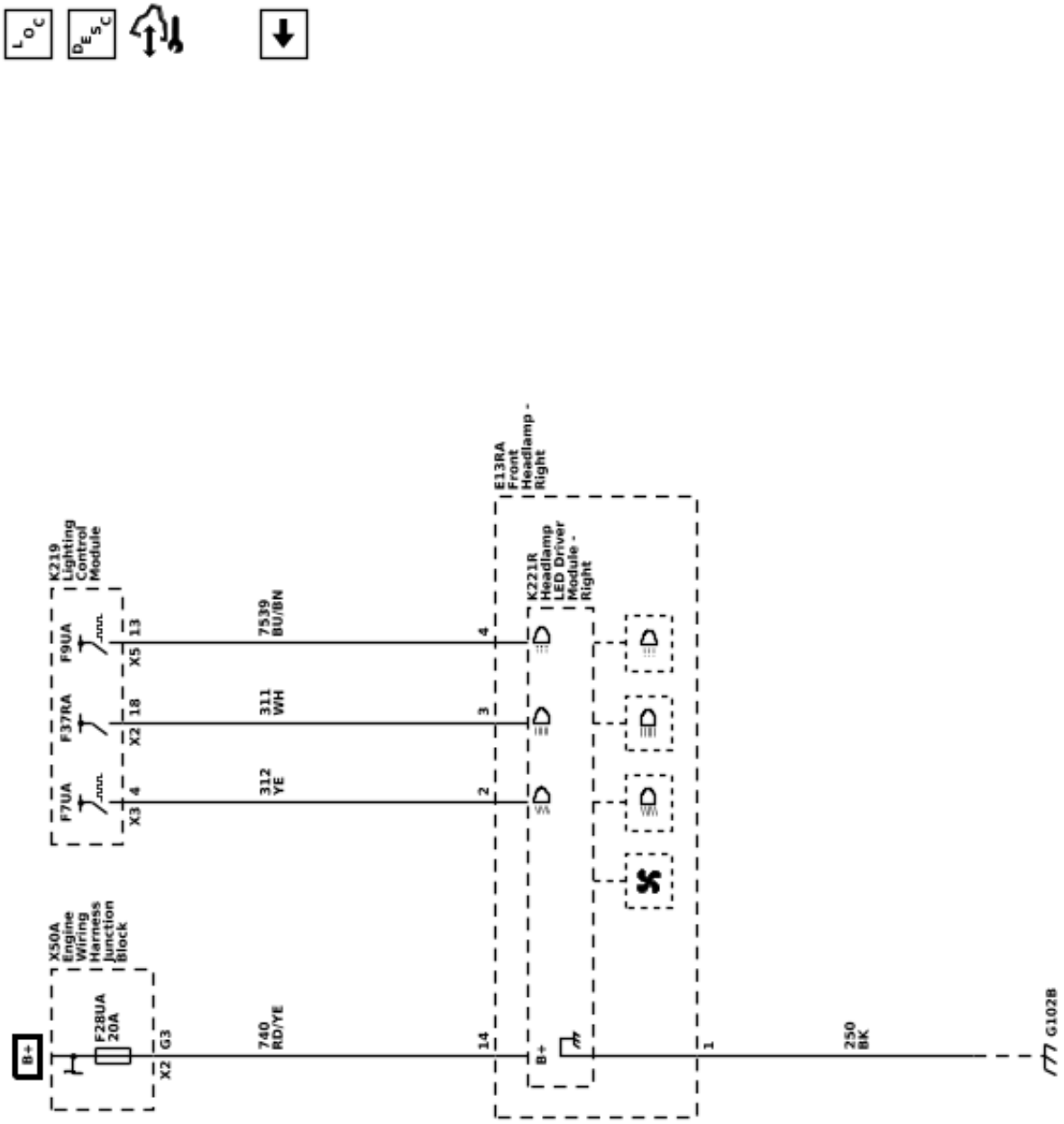

Fog Lights Schematics (Fog Lamps (T40))

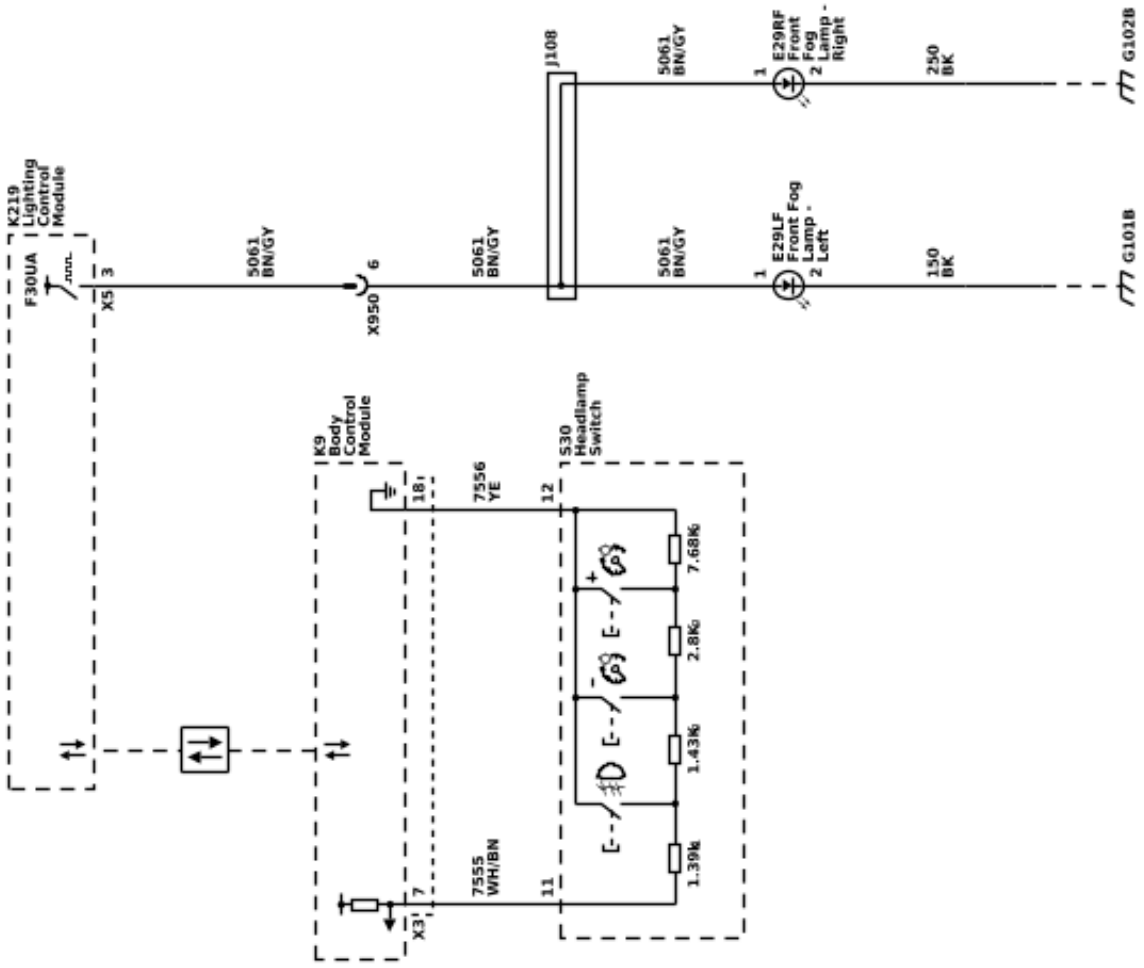

6613275

6613278

Exterior Lights Schematics (Controls and Indicators)

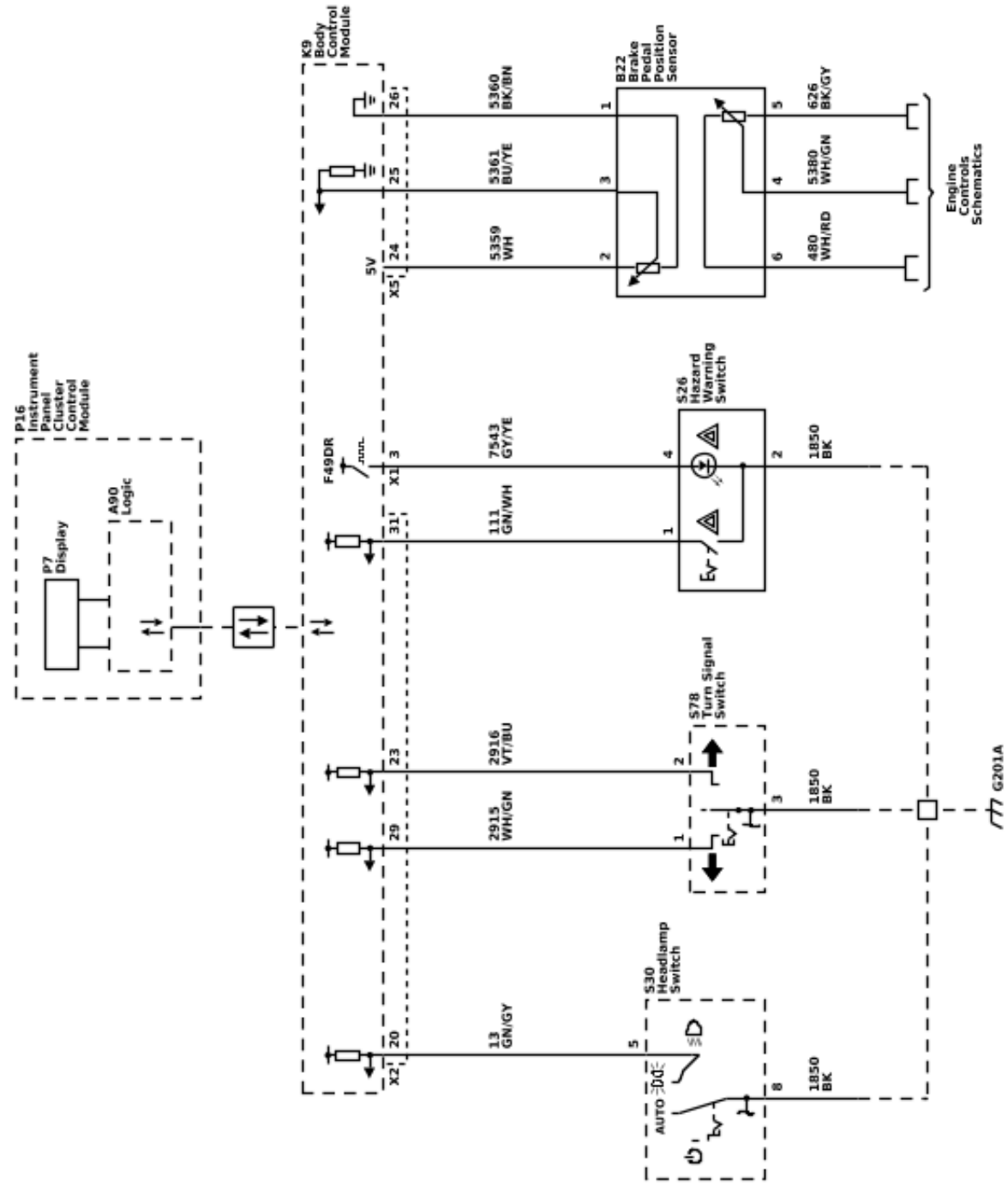

6613280

Exterior Lights Schematics (Front Left Lights)

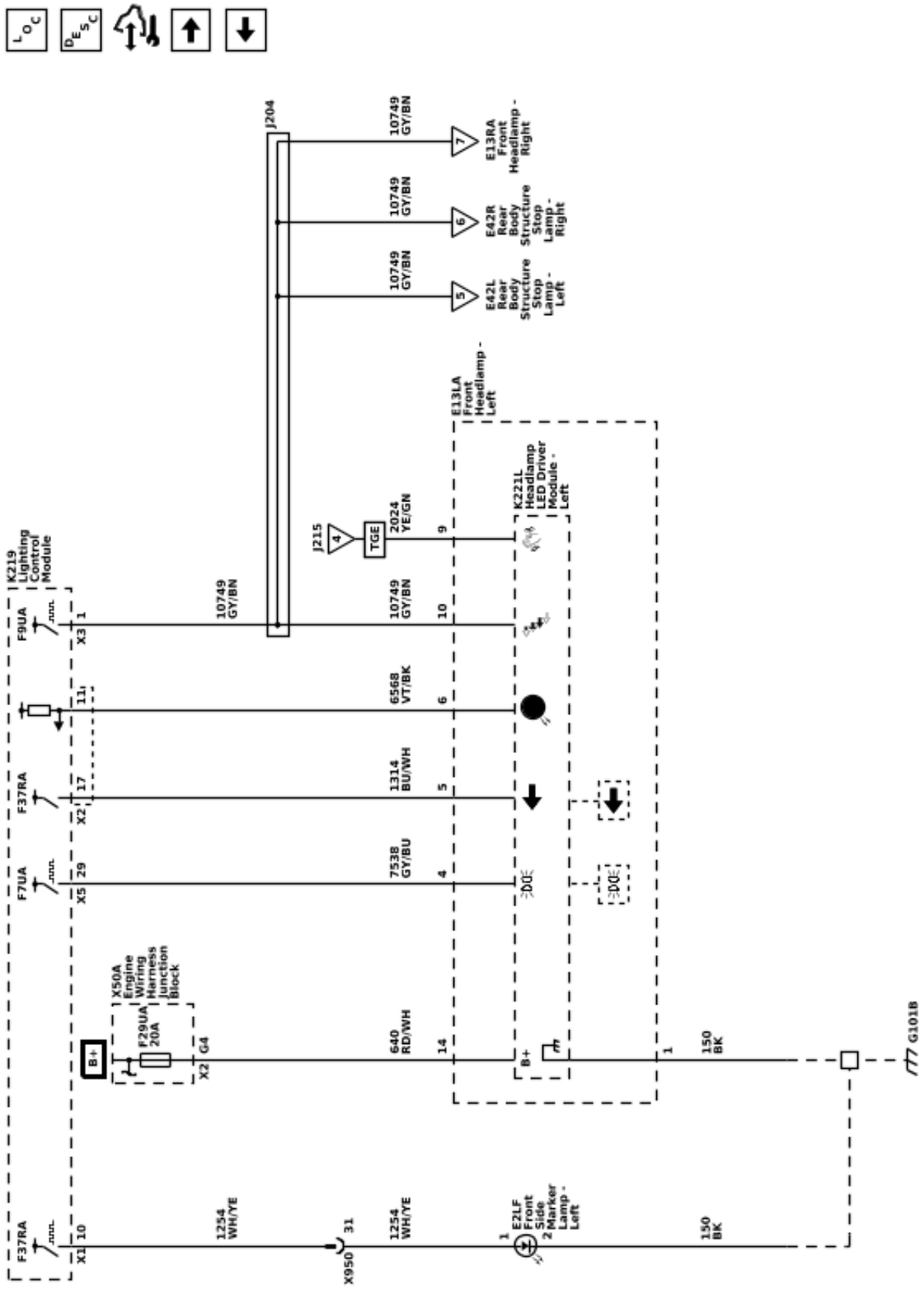

Exterior Lights Schematics (Front Right Lights)

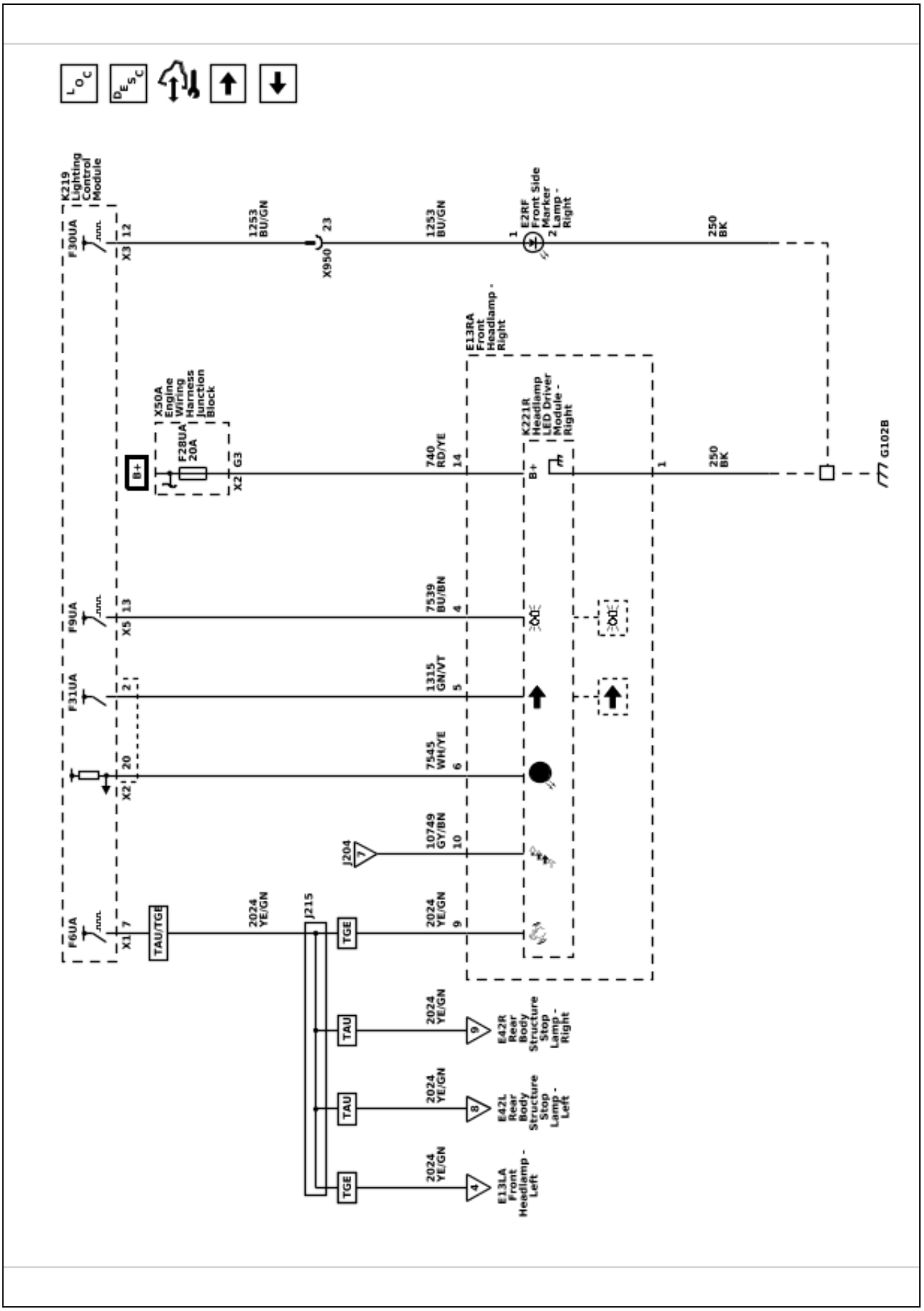

Exterior Lights Schematics (Outside Rearview Mirror Lamps (DW6 / DXR))

6613282

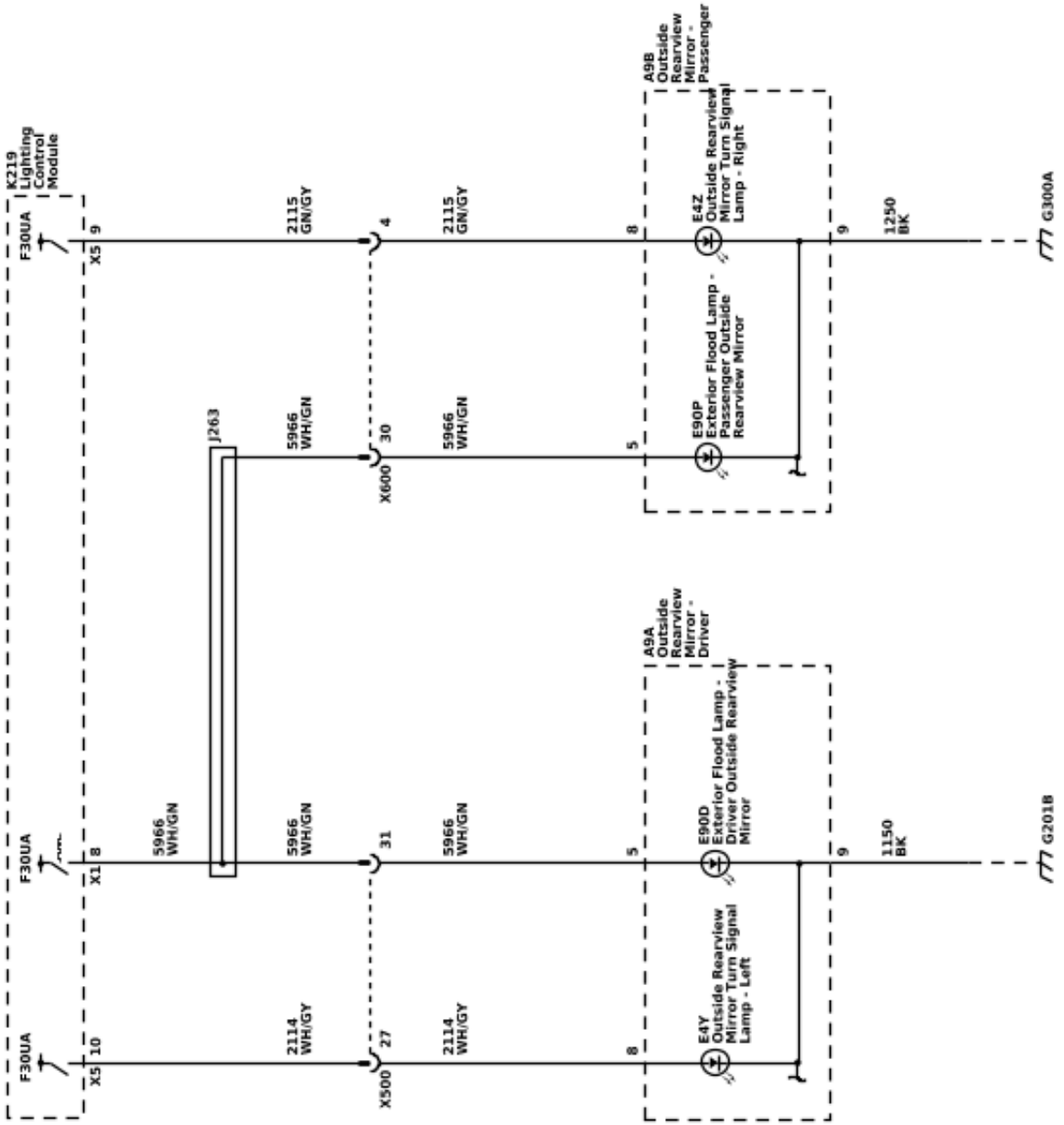

6613286

Exterior Lights Schematics (Running Board Lamps (B3L))

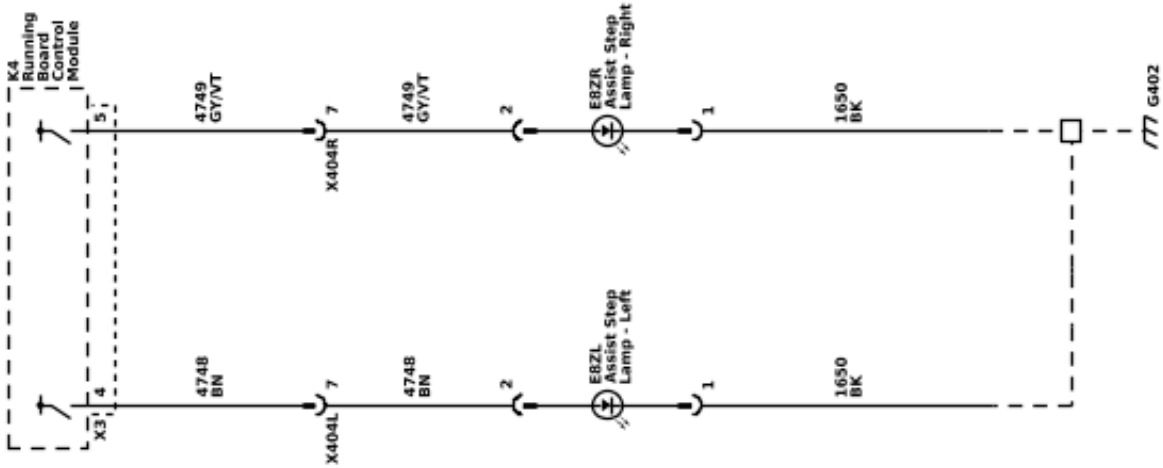

6613284

Exterior Lights Schematics (Rear Left - Stop, Tail, and Turn Lights)

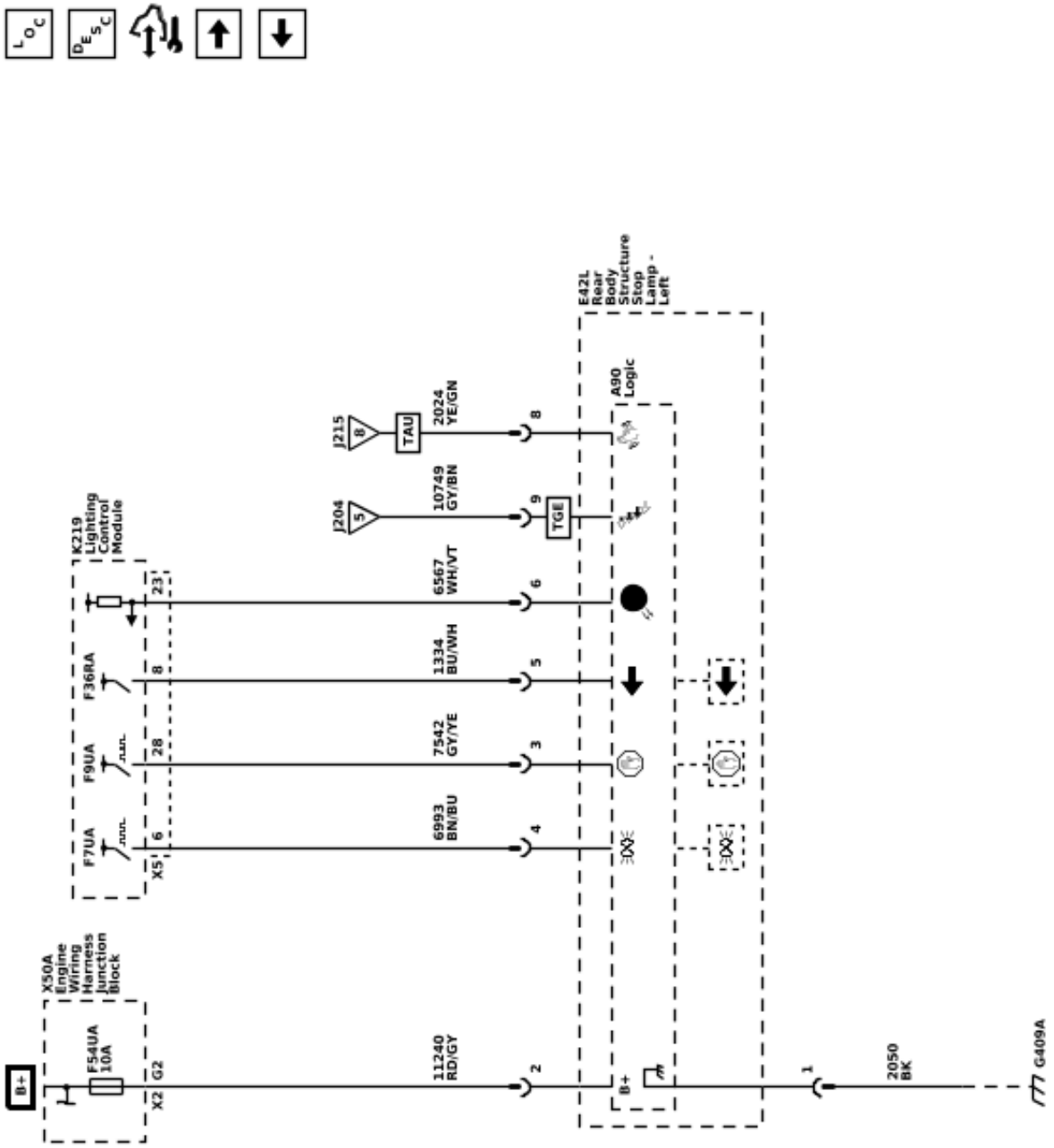

Exterior Lights Schematics (Rear Right - Stop, Tail, and Turn Lights)

6613279

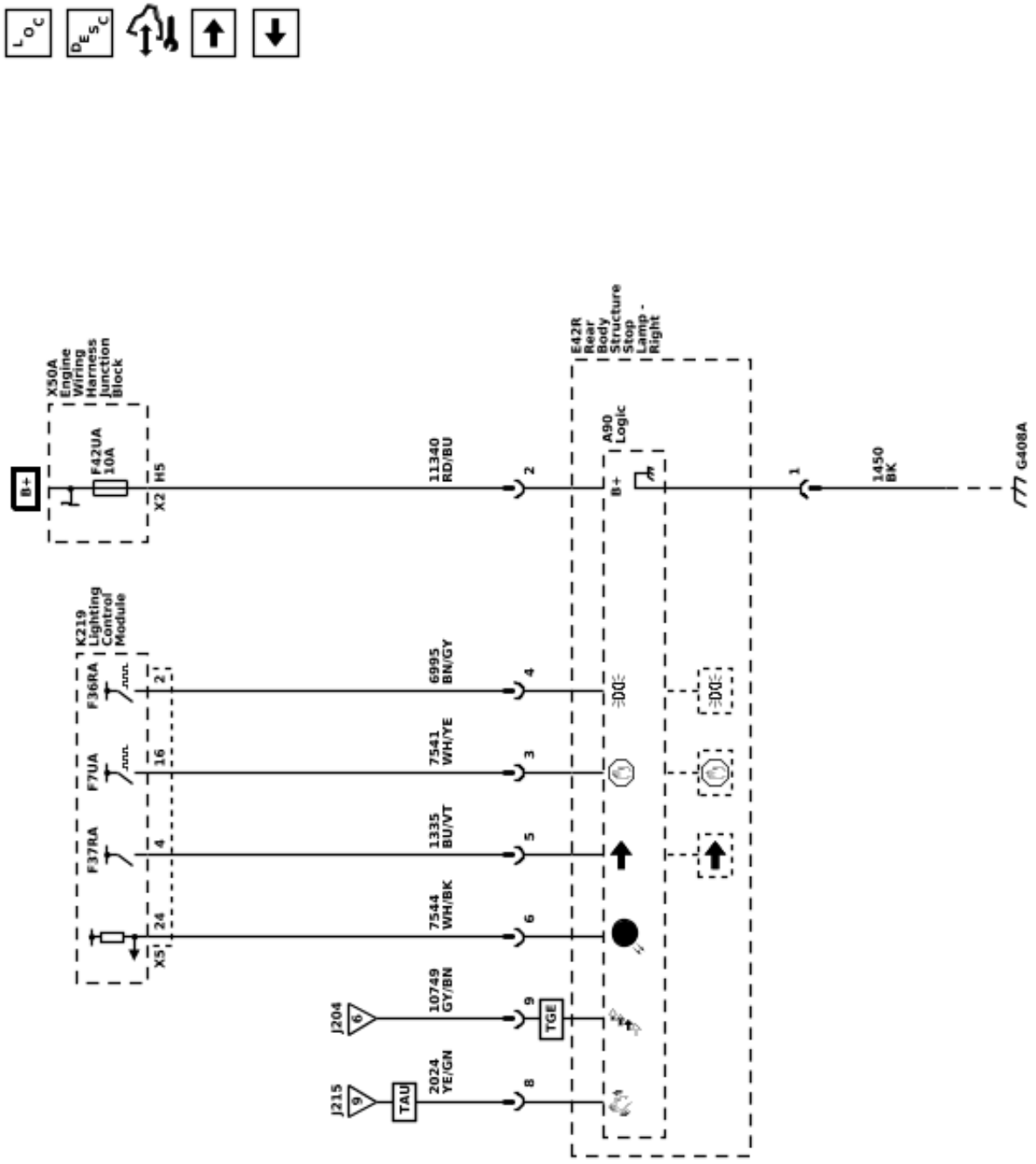

Exterior Lights Schematics (Back Up Lamps)

6613285

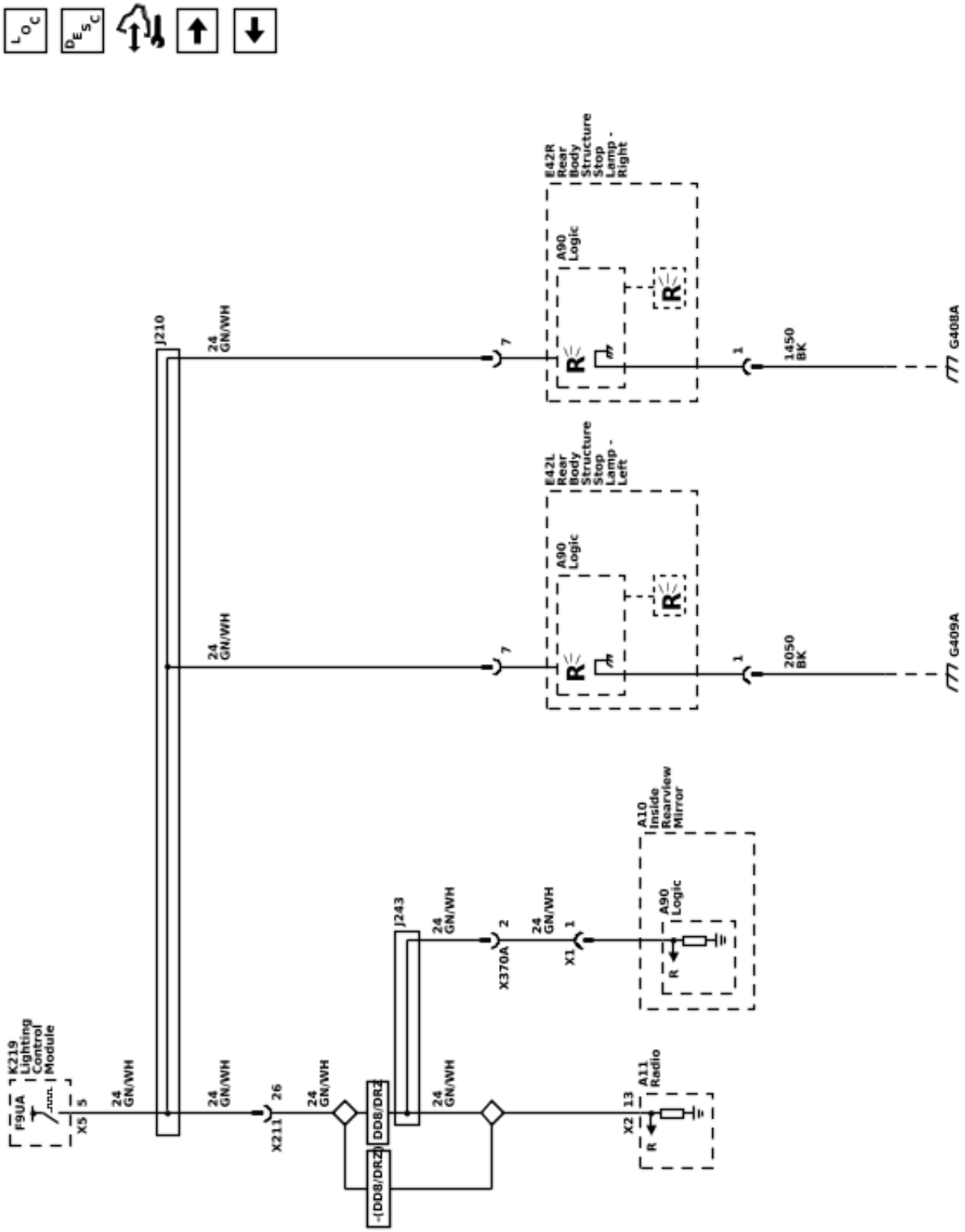

Exterior Lights Schematics (License and High Mount Stop Lights)

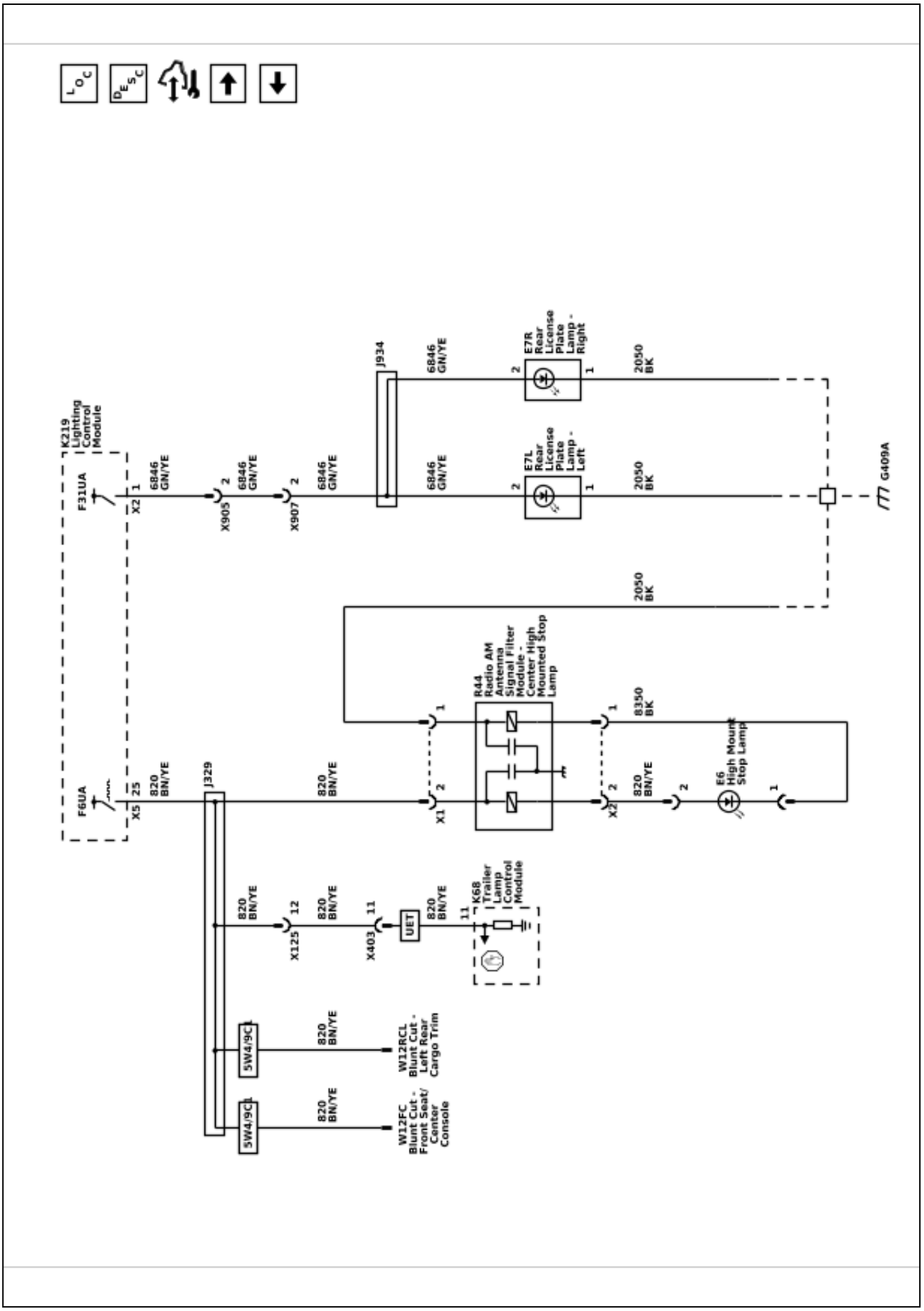

6613283

6613276

Exterior Lights Schematics (Lighting Control Module Power, Ground, and Serial Data)

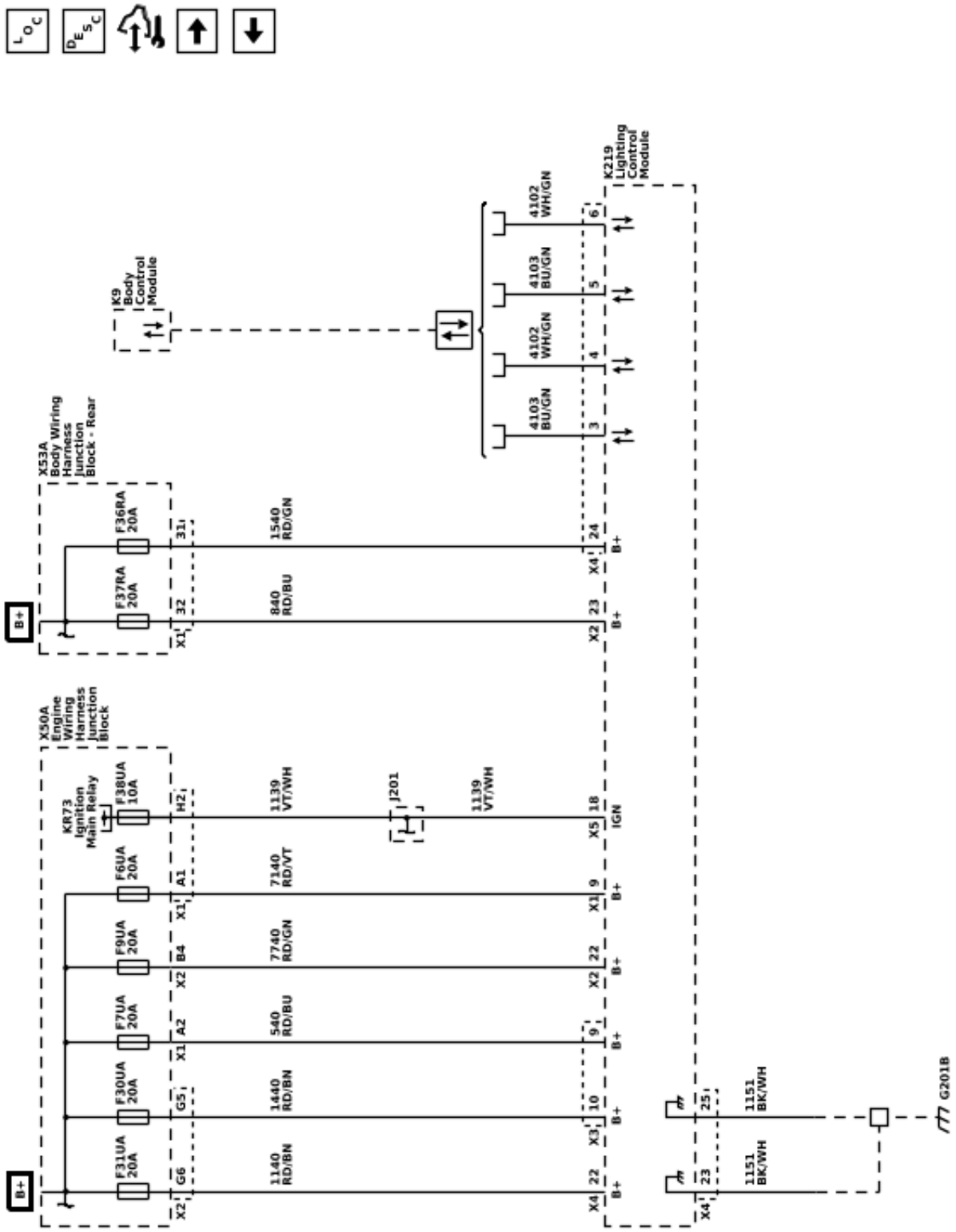

Exterior Lights Schematics (Lighting Control Module Subsystem References)

6613277

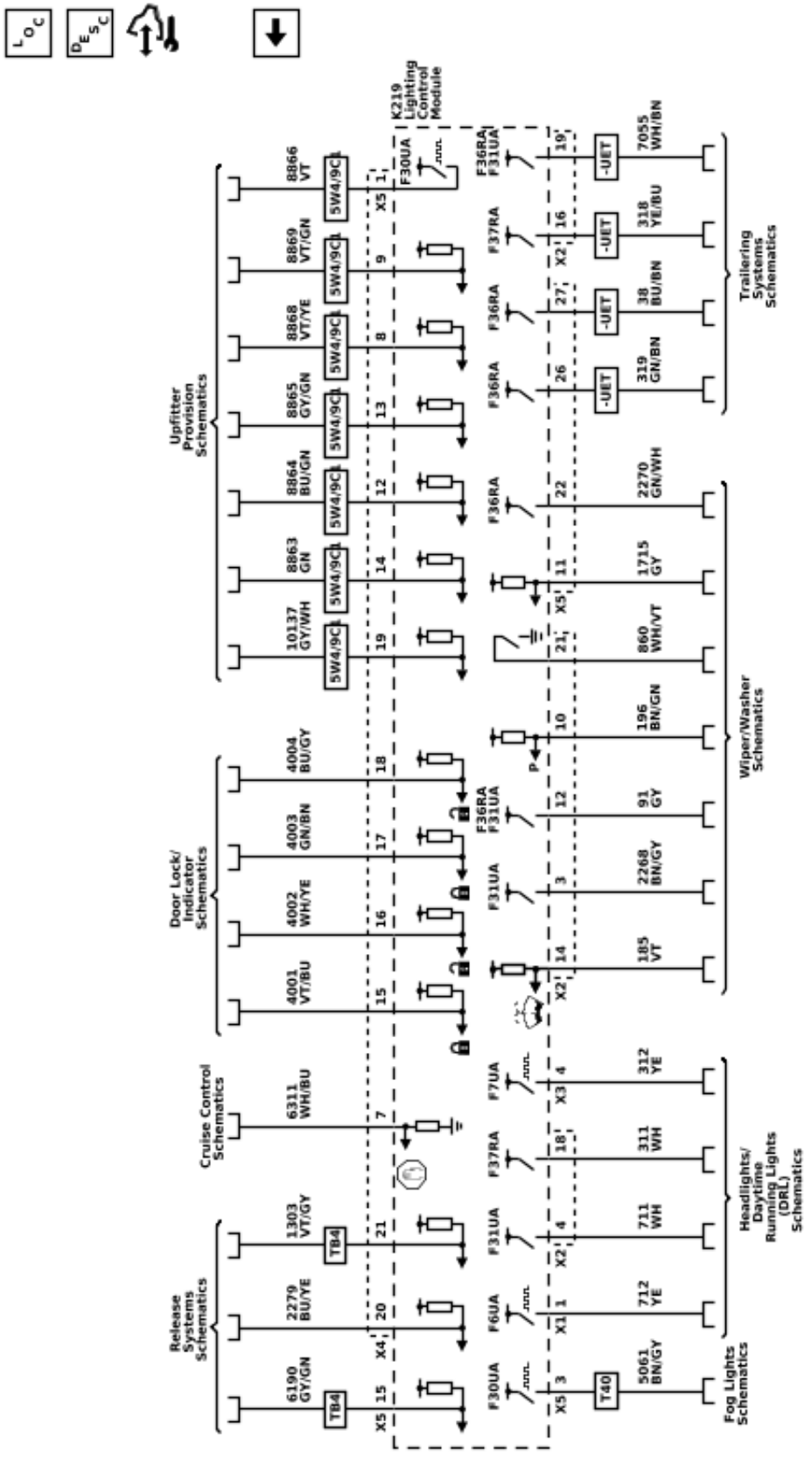

6613288

Interior Lights Schematics (Roof Console, and Roof Reading/Courtesy Lamps (C3U))

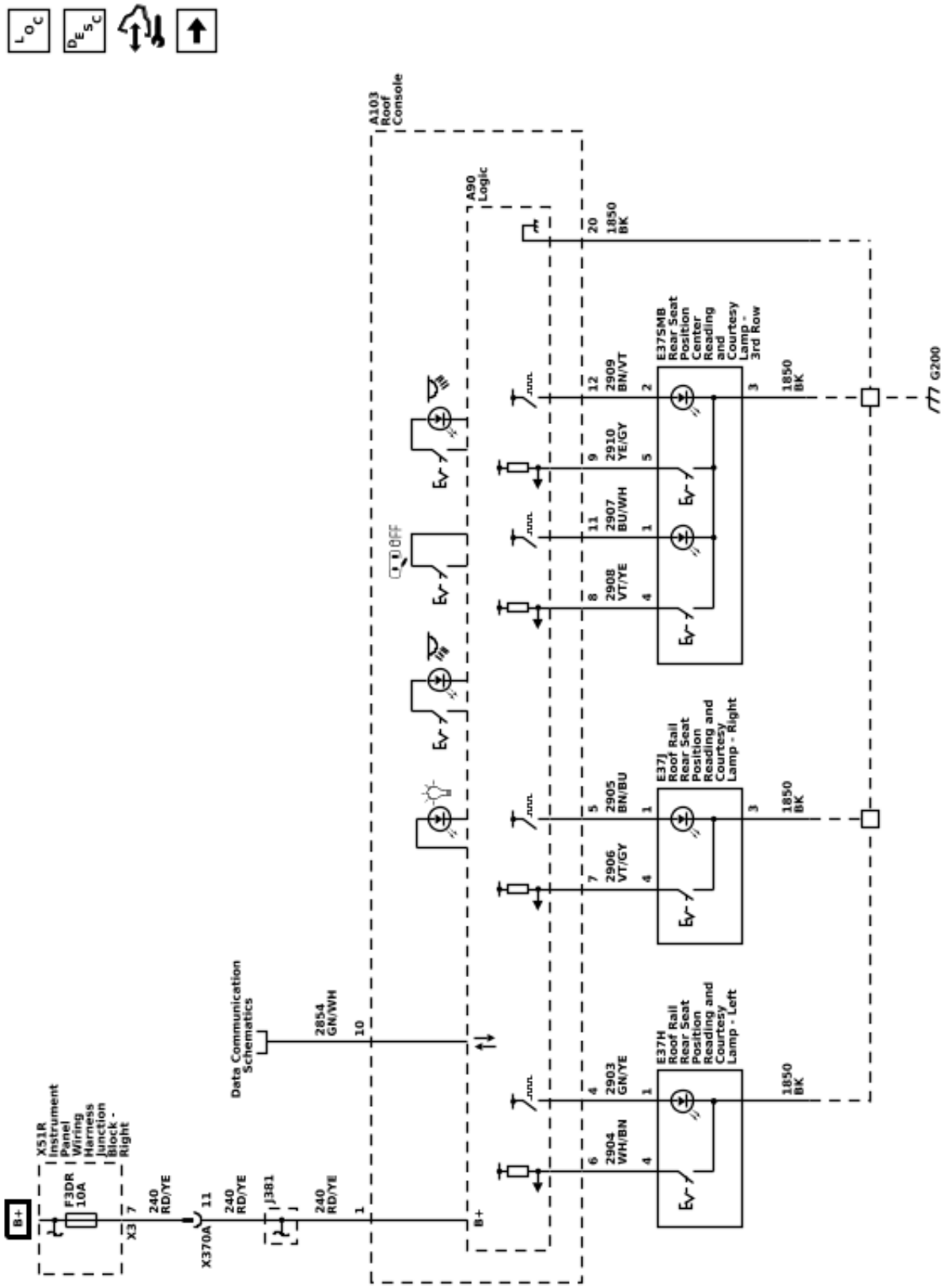

6613289

Interior Lights Schematics (Roof Console, and Roof Reading/Courtesy Lamps (- C3U))

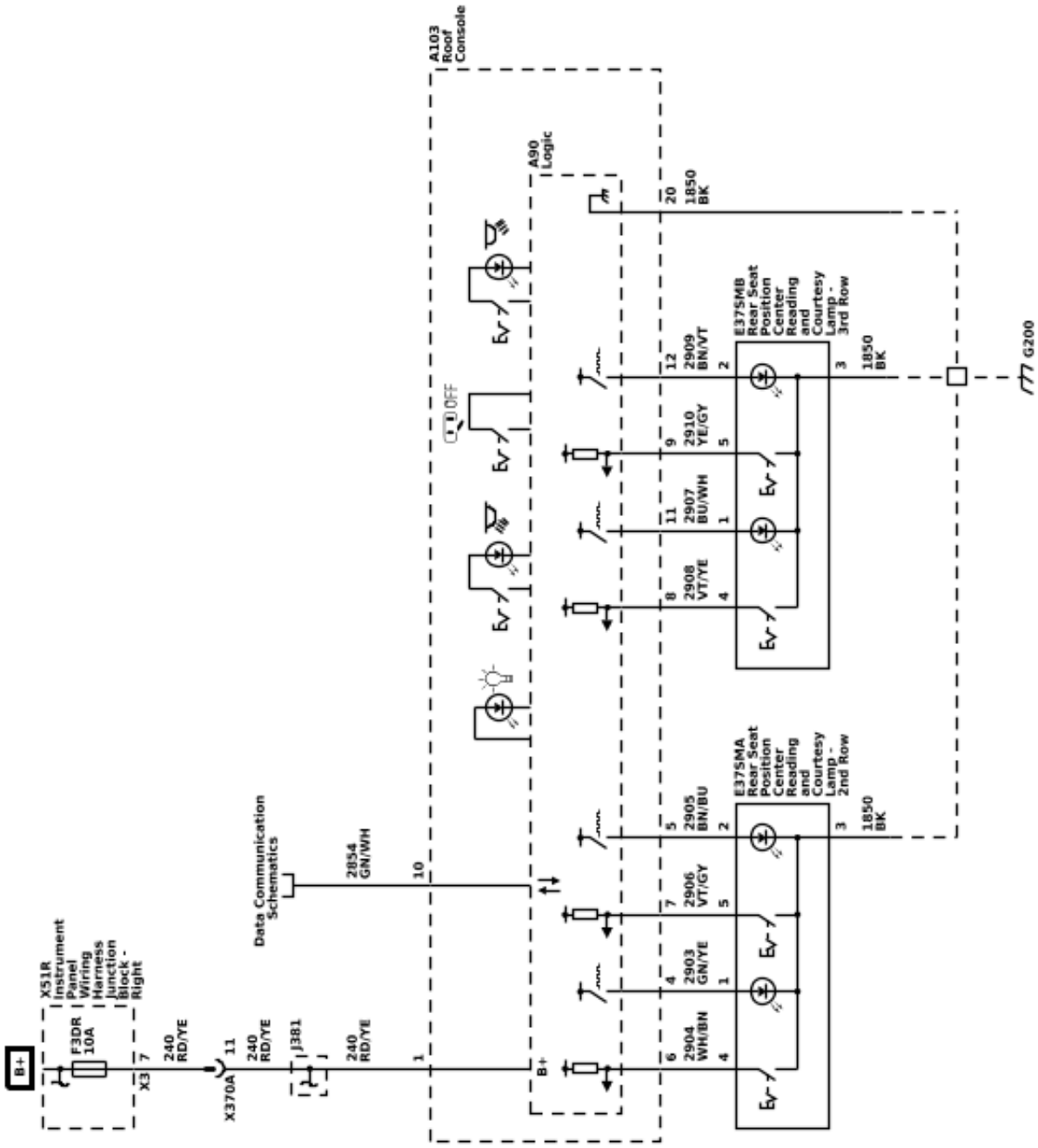

Interior Lights Schematics (Sunshades, Floor Console Compartment, and Cargo Lamps)

6613287

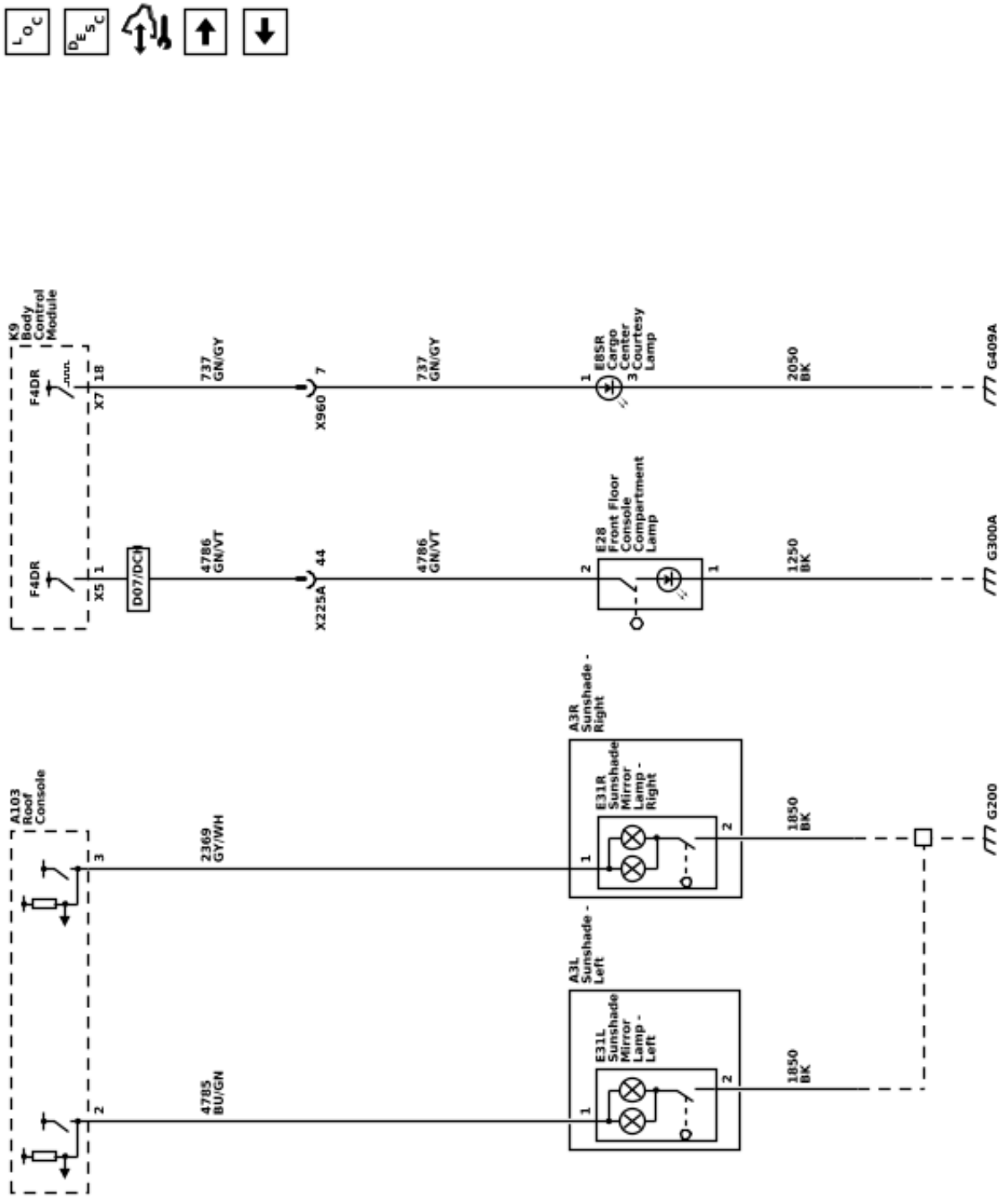

6613290

Interior Lights Schematics (Floor Courtesy Lamps)

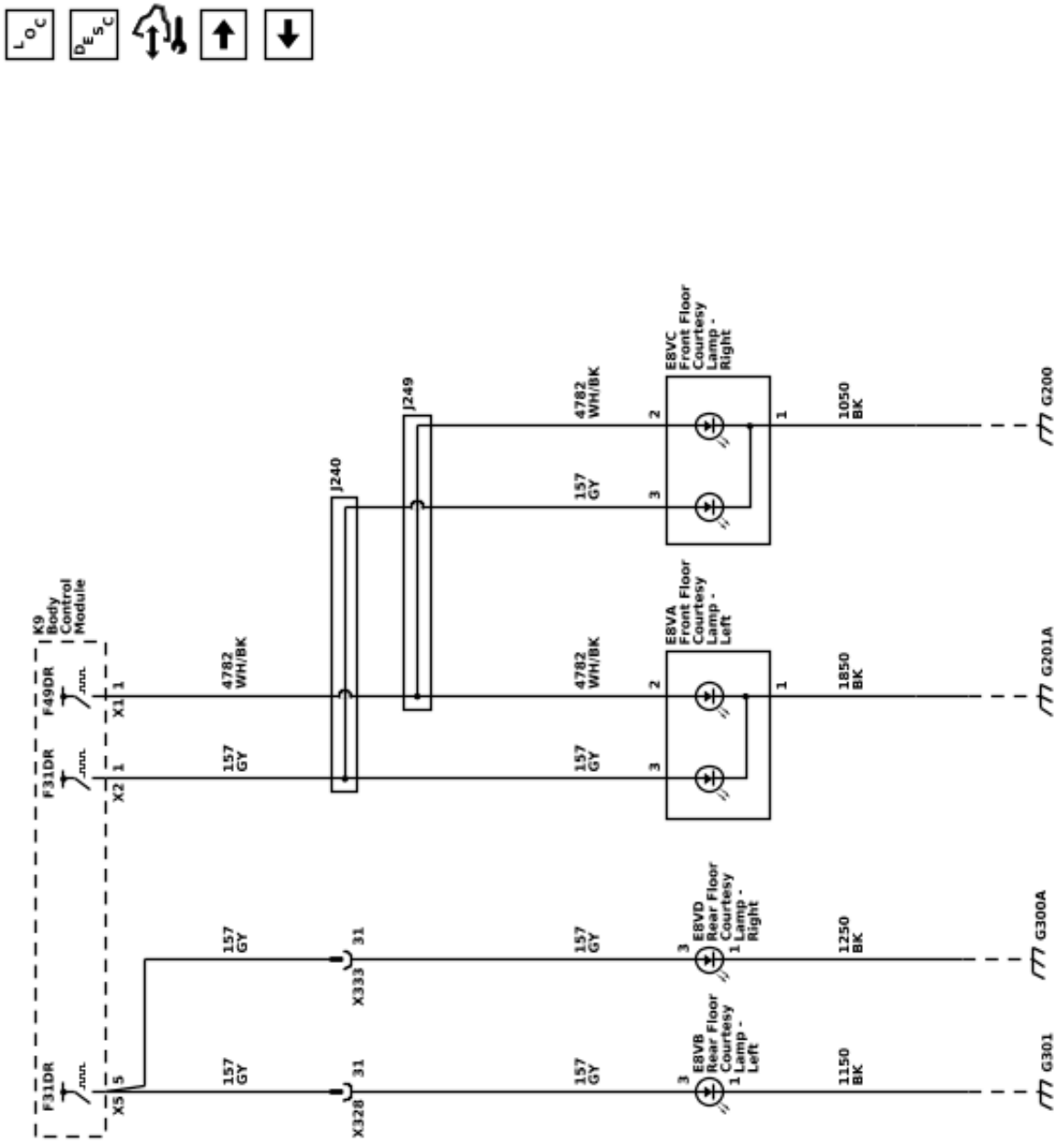

Interior Lights Schematics (Door Illumination Lamps)

6613291

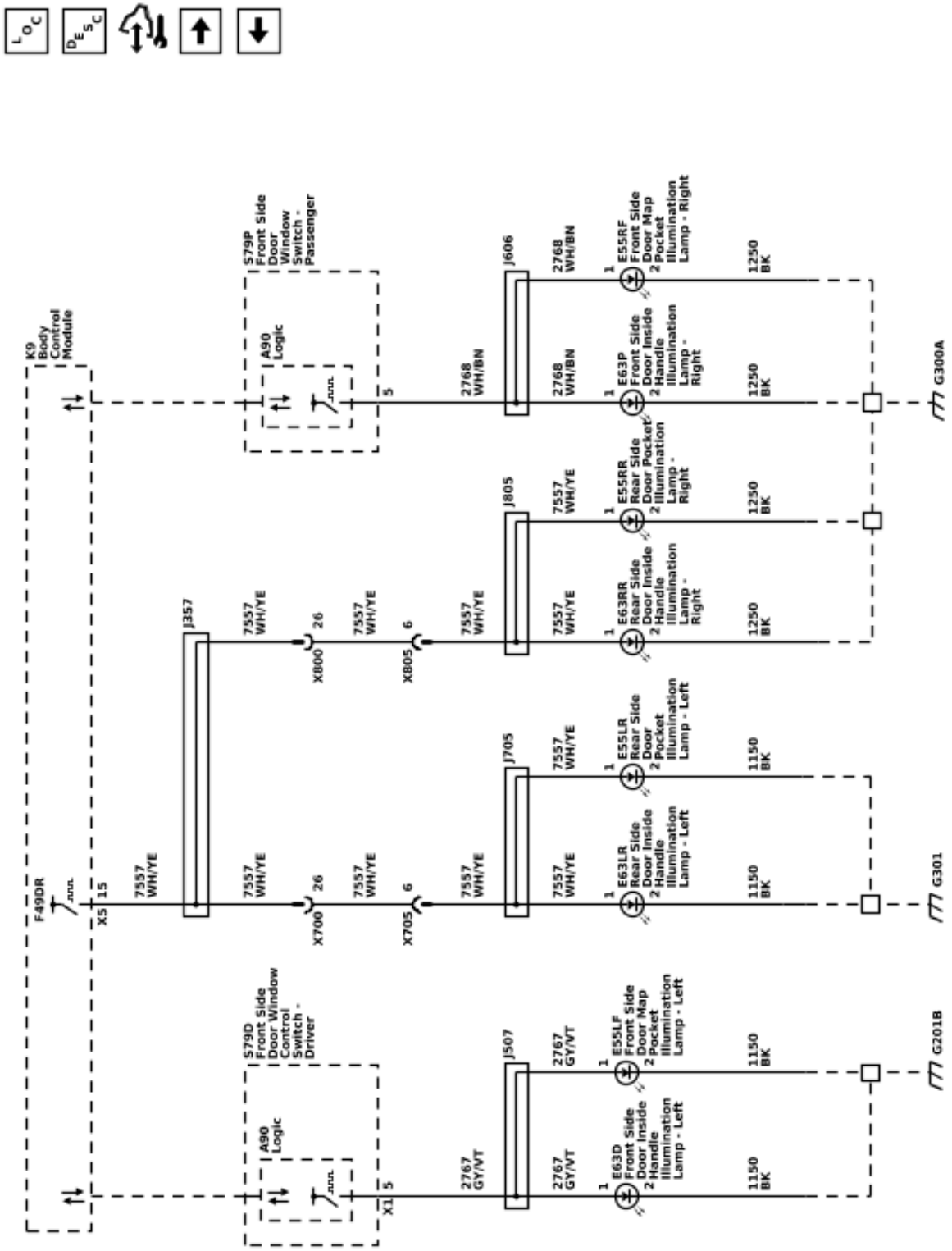

6767004

Interior Lights Schematics (Accessory - Door Sill Plate Lamps)

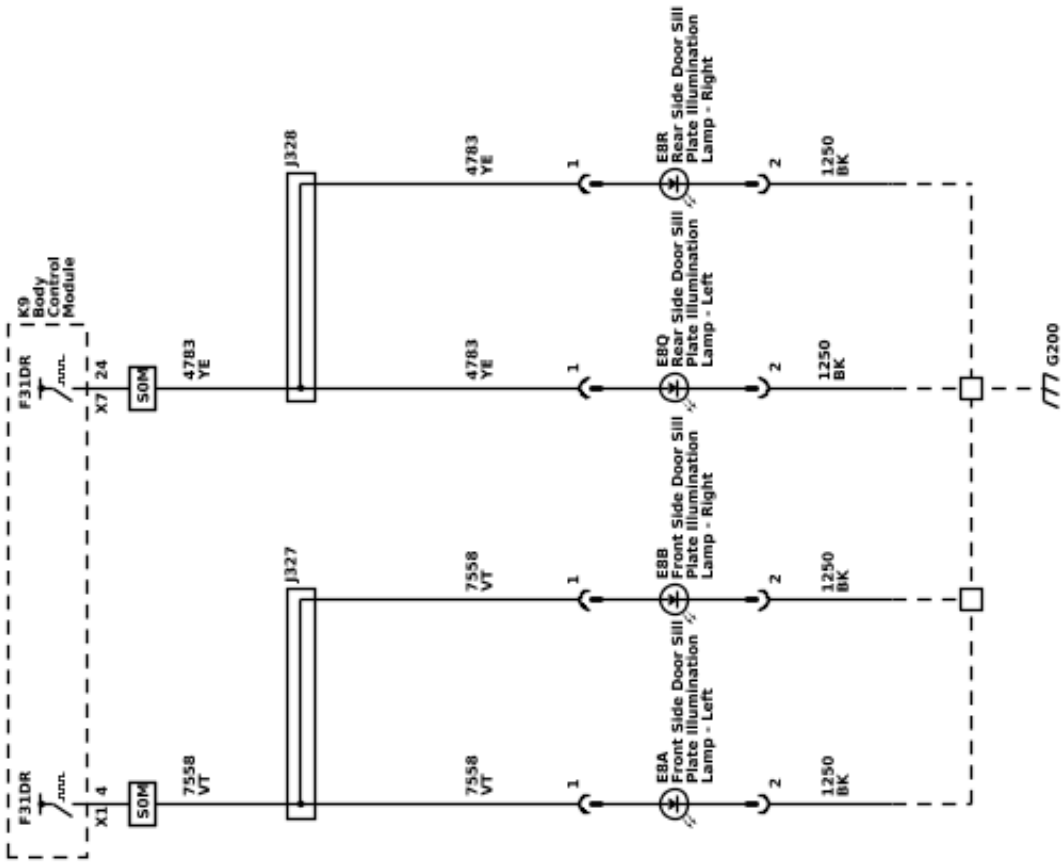

6613293

Interior Lights Dimming Schematics (Controls and Liftgate Dimming)

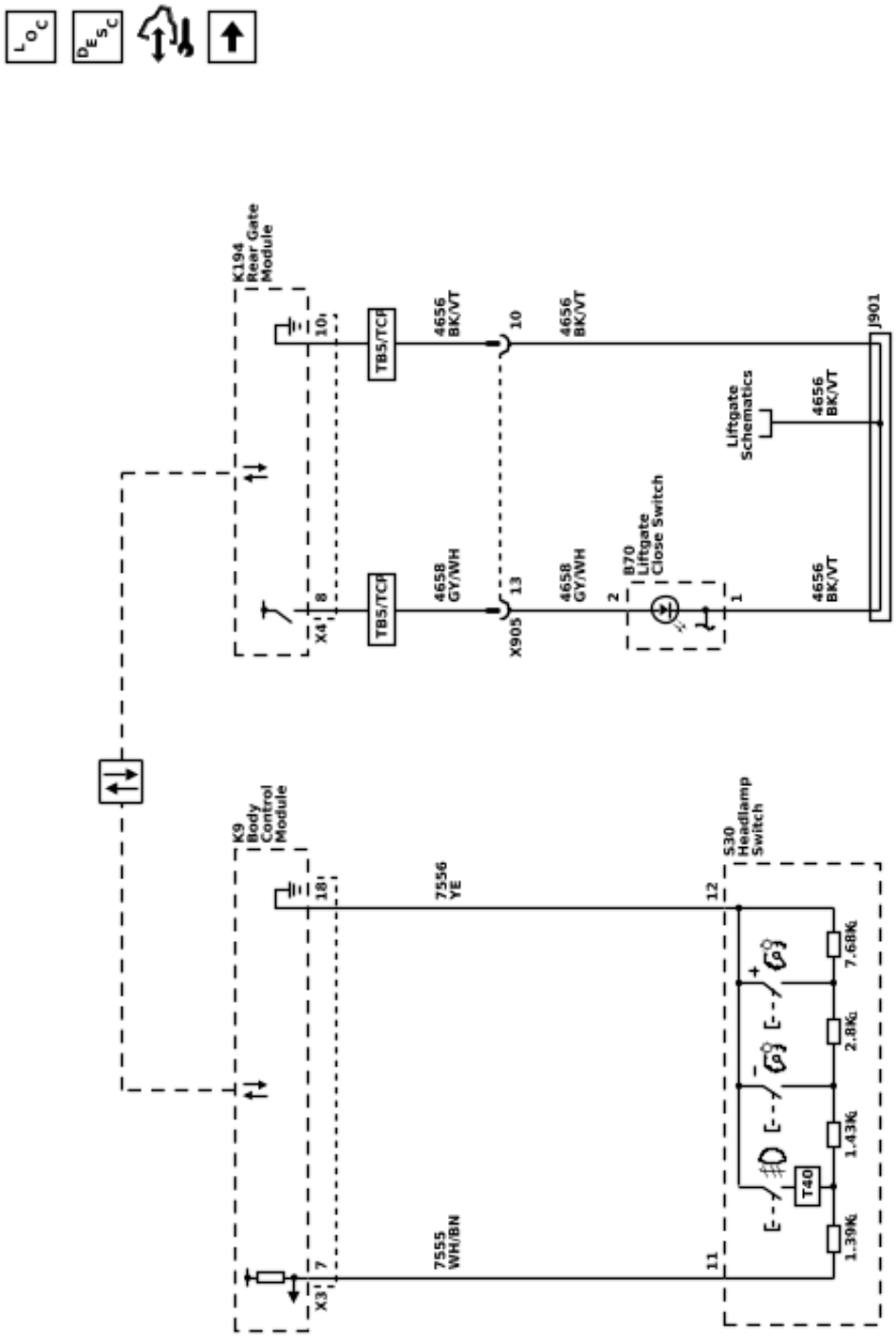

Interior Lights Dimming Schematics (Steering Wheel and Front Door Dimming)

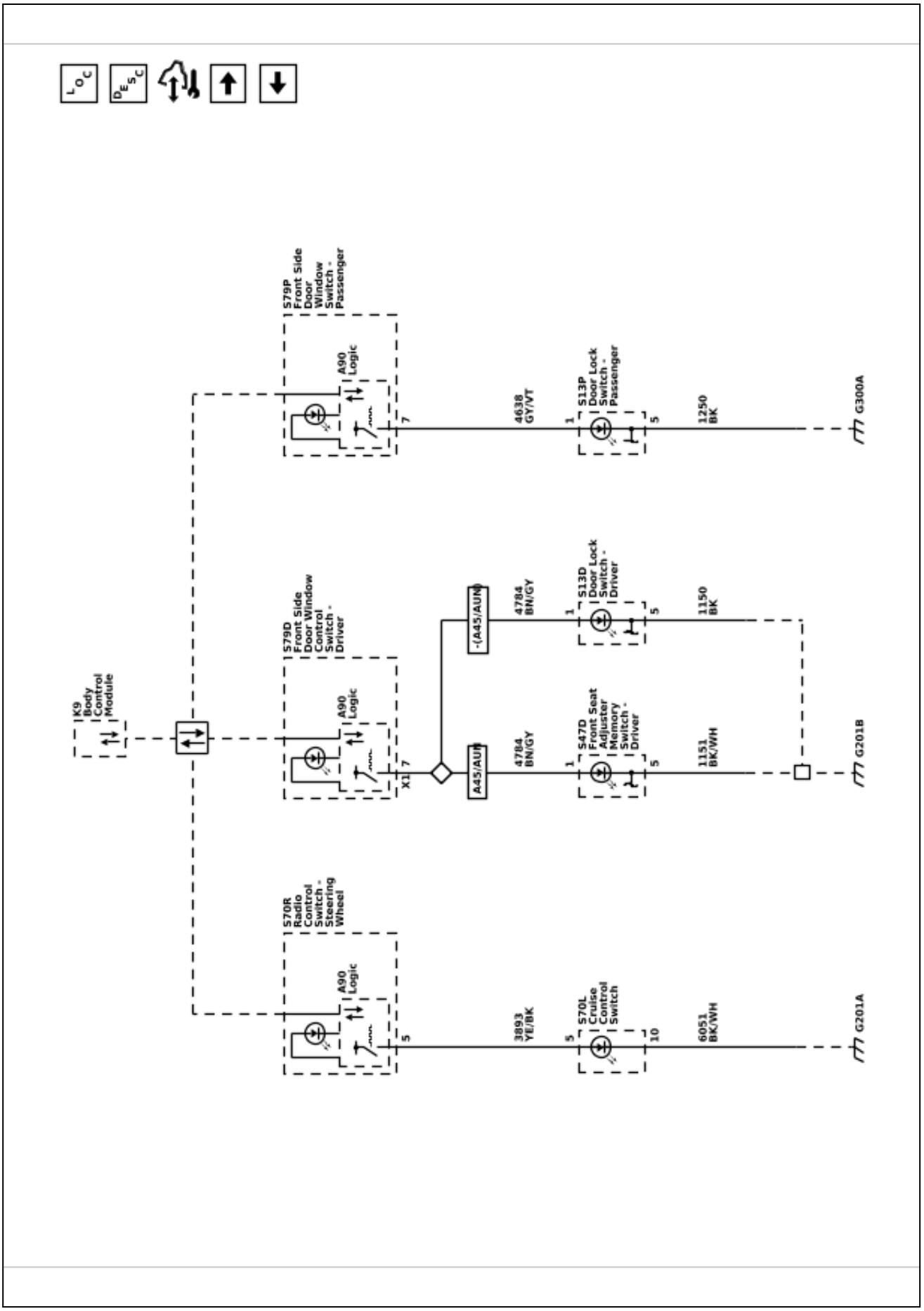

6613294

Interior Lights Dimming Schematics (Rear Doors, Seats, and Trim Dimming)

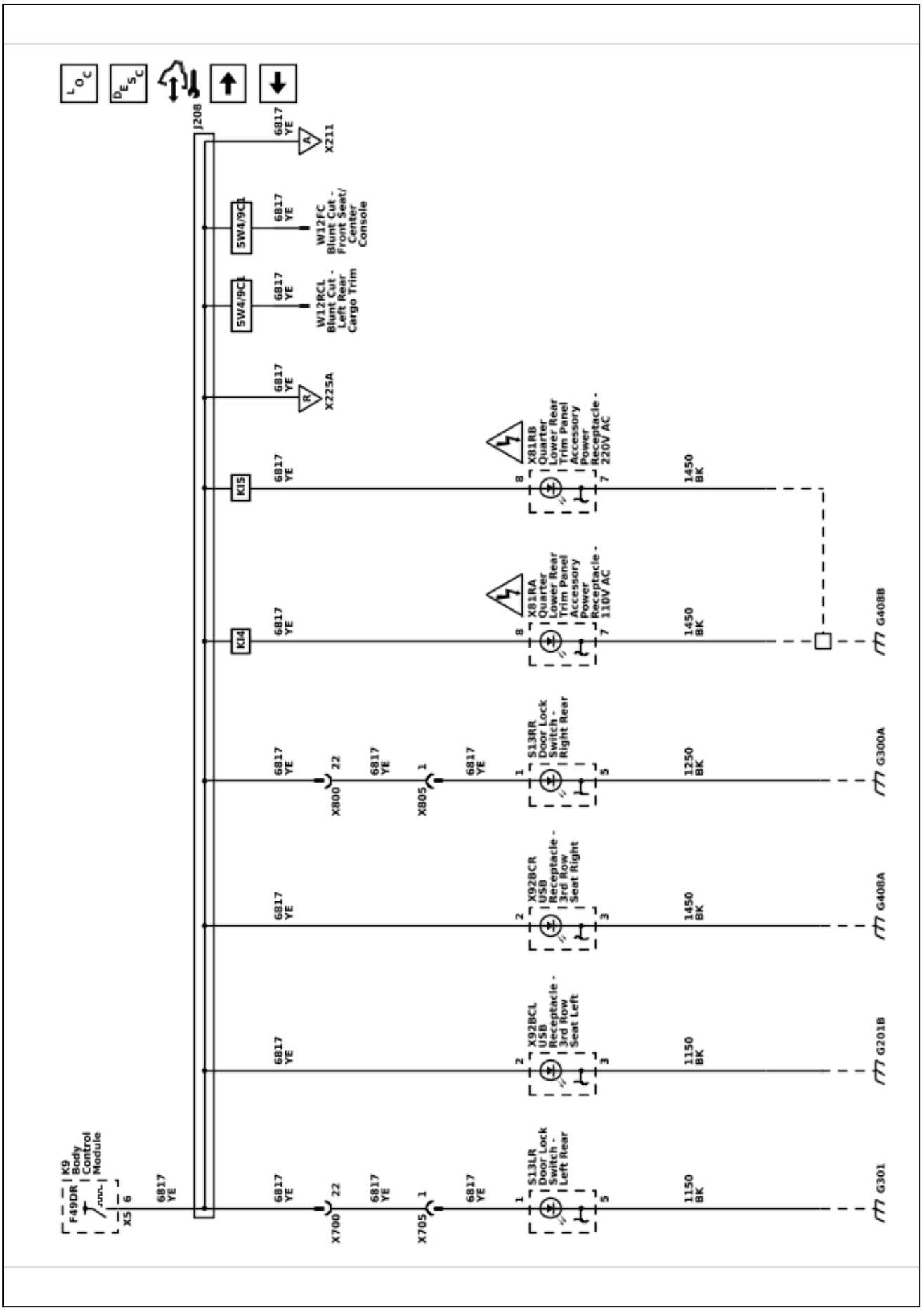

Interior Lights Dimming Schematics (Floor Console Dimming)

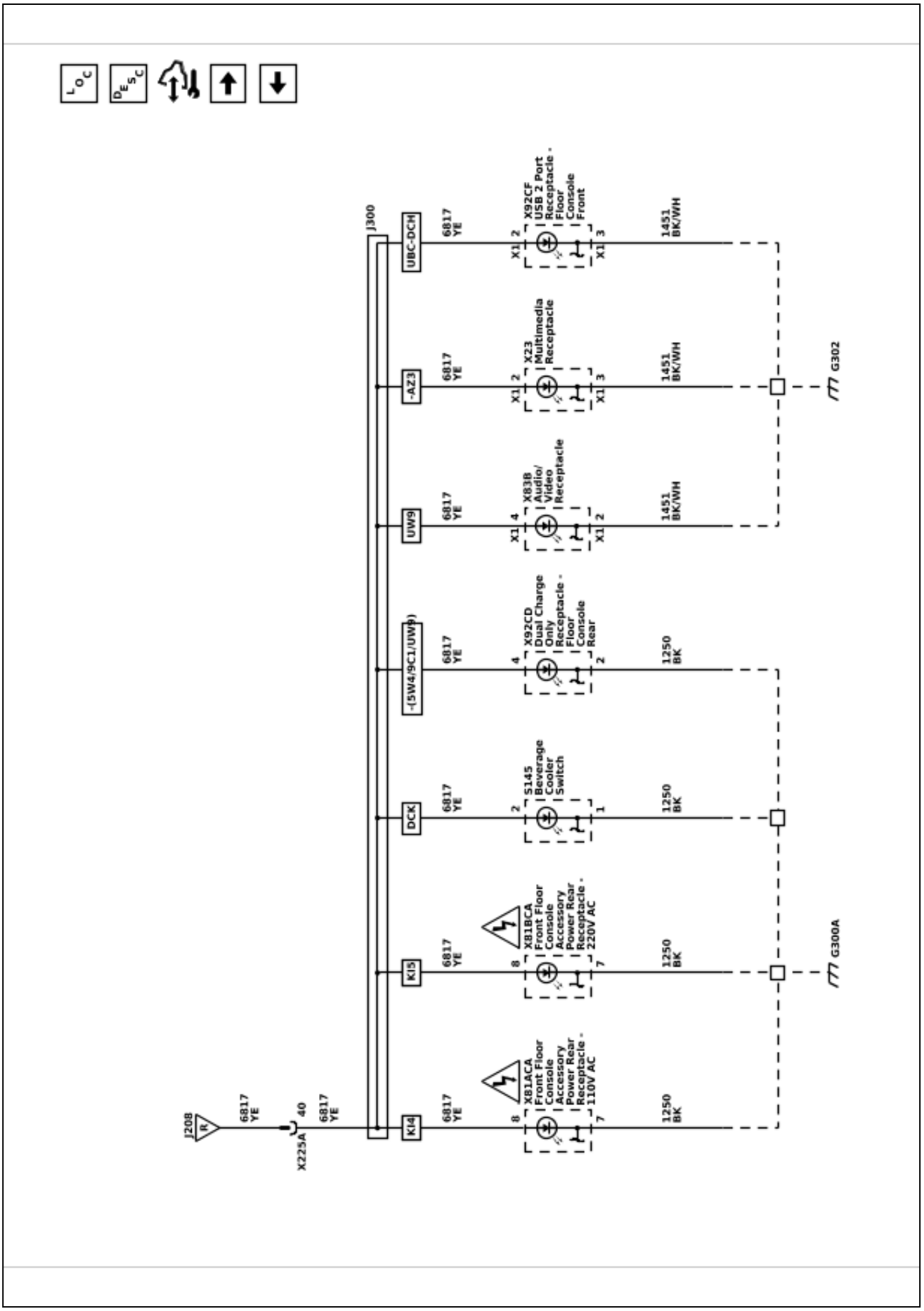

6613297

Interior Lights Dimming Schematics (Instrument Panel Dimming)

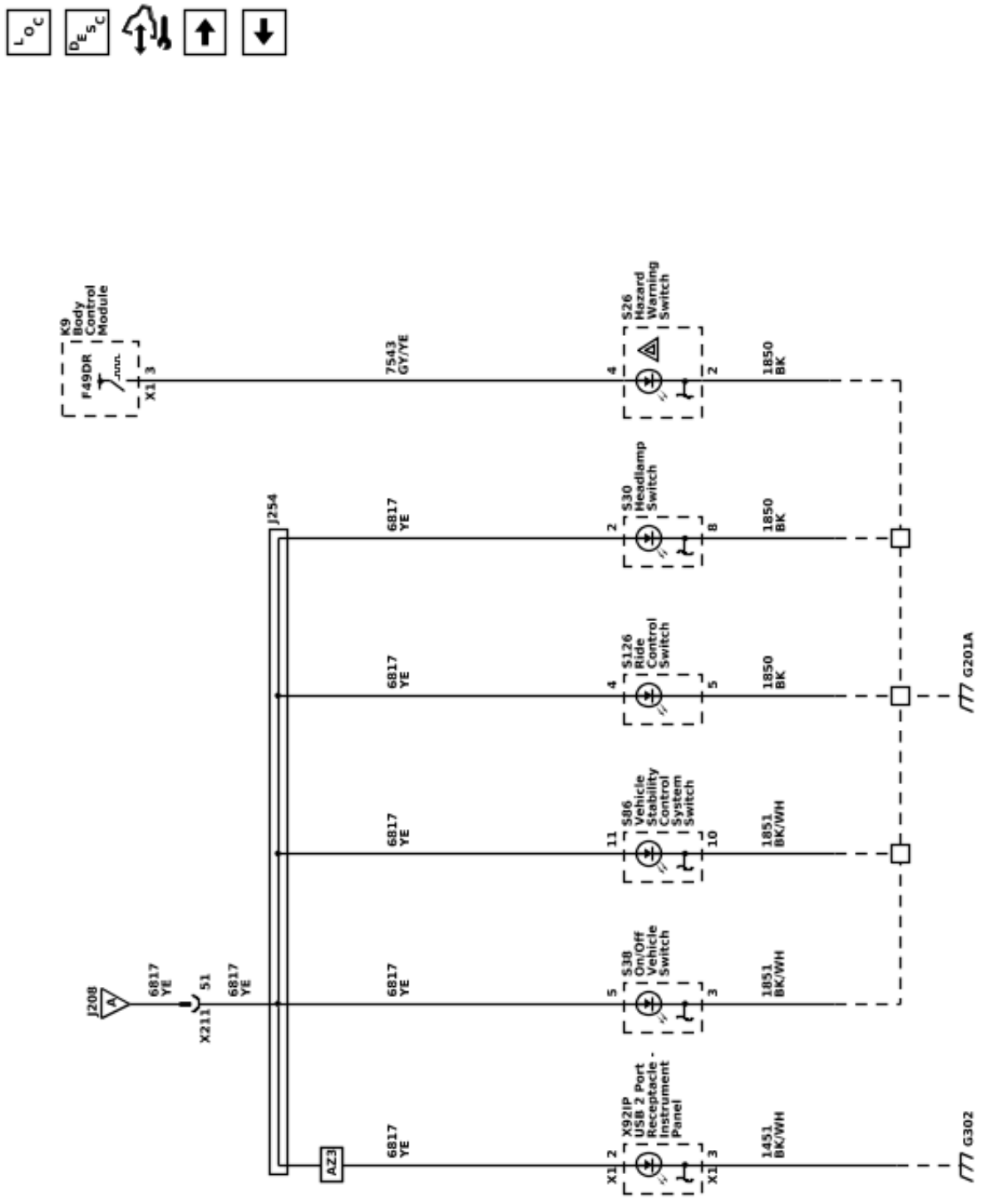

Interior Lights Dimming Schematics (Serial Data Dimming)

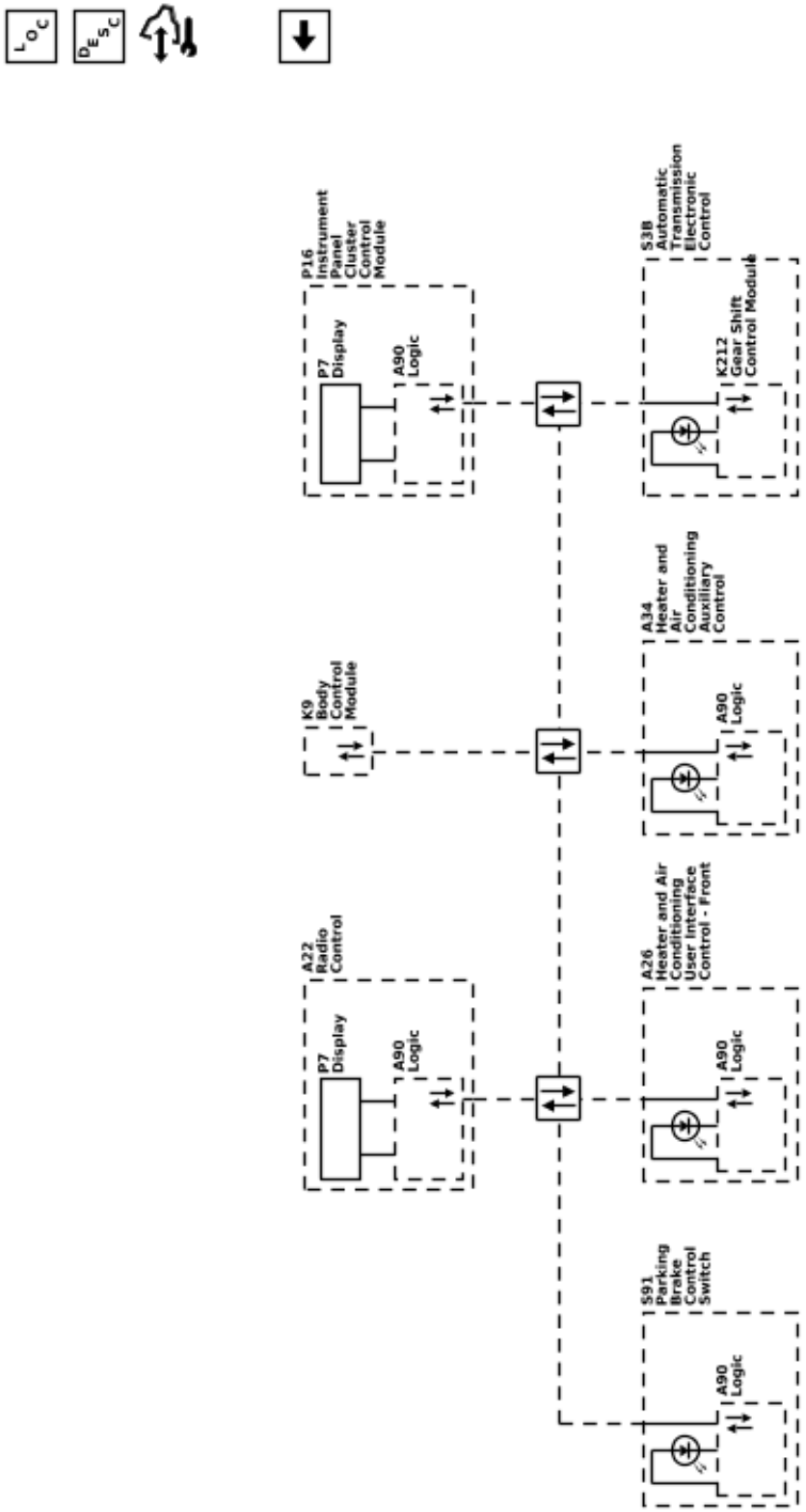

6613572

Description and Operation

Exterior Lighting Systems Description and Operation

The exterior lighting system consist of the following lamps:

- Backup lamps
- Daytime running lamps (DRL)
- Exterior courtesy lamps
- Hazard warning lamps
- Headlamps
- Park, tail, license, and marker lamps
- {T40} Front fog lamps
- {B3L} Running board lamps
- Stop lamps
- Turn signal lamps
- Trailer lighting, refer to *Trailering Description and Operation 0-58* for more information.

Low Beam Headlamps

The headlamps may be turned ON in 3 different ways:

- When the headlamp switch is placed in the ON position, for normal operation
- When the headlamp switch is placed in the AUTO position, for automatic lamp control during low ambient light conditions
- When the headlamp switch is placed in the AUTO position, with the windshield wipers ON in daylight conditions, after a 6 second delay

The K9 Body Control Module (BCM) monitors three signal circuits from the S30 Headlamp Switch. When the headlamp switch is in the AUTO position, the three signal circuits are unaffected (open) and the BCM relies on the B10D Sun Load and Ambient Light and Security Indicator Sensor input to determine if headlamps are required or if daytime running lamps will be activated based on outside lighting conditions. When the headlamp switch is placed in the headlamp OFF position, the headlamp switch headlamps OFF signal circuit is grounded, indicating to the BCM that the exterior lamps should be turned OFF. With the headlamp switch in the PARK LAMPS position, the headlamp switch park lamps ON signal circuit is grounded, indicating that the park lamps have been requested. When the headlamp switch is in the HEADLAMP position, both the headlamp switch park lamps ON signal circuit and the headlamps ON signal circuit are grounded. The BCM responds to these inputs by sending a serial data message to the K219 Lighting Control Module. The Lighting Control Module responds by applying pulse width modulated (PWM) voltage to both headlamp low beam control circuits, illuminating the low beam headlamps. When the Lighting Control Module commands the low beam headlamps ON, the operator will notice the interior backlighting for the instrument cluster and the various other switches dim to the level of brightness selected by the instrument panel dimmer switch.

High Beam Headlamps

The high beam and flash to pass (FTP) functions are contained within the S78 Turn Signal Switch. The K9 Body Control Module (BCM) provides the turn signal/multifunction switch with two signal circuits, the high beam signal circuit and the FTP signal circuit. When the low beam headlamps are ON, and the turn signal/multifunction switch is placed in either the high beam position or FTP position, ground is applied to the BCM through the high beam/FTP signal circuit. The BCM responds to the high beam request by sending a serial data message to the K219 Lighting Control Module. The Lighting Control Module responds by applying pulse width modulated (PWM) voltage to both headlamp high beam control circuits, illuminating the high beam headlamps. The status of the high beam lamps is shown by a blue indicator located on the instrument cluster. When high beams are commanded on, the indicator will be illuminated continuously. If the driver turns the high beams off, the indicator will also turn off.

Animation Lighting

Animation lighting illuminates in the front and rear lamps of the vehicle anytime the vehicle is unlocked or upon approach with key fob (if equipped with approach detection) during dark ambient light conditions. Animation lighting is commanded on with a pulse width modulated (PWM) signal voltage from the K219 Lighting Control Module through signal circuit 2024.

Flash to Pass

When the S78 Turn Signal Switch is momentarily placed in the flash to pass position, ground is applied to the turn signal/multifunction switch. The turn signal/multifunction switch applies ground to the K9 Body Control Module (BCM) through the flash to pass switch signal circuit. The BCM responds to the flash to pass request by sending a serial data message to the K219 Lighting Control Module. The Lighting Control Module responds by applying pulse width modulated (PWM) voltage to both headlamp high beam control circuits, illuminating the high beam headlamps. This causes the high beam headlamps to illuminate at full brightness until the turn signal/multifunction switch is returned to the at rest position.

Automatic Headlamp Control

The K9 Body Control Module (BCM) monitors three signal circuits from the S30 Headlamp Switch. When the headlamp switch is in the AUTO position, the three signal circuits are unaffected (open) and the BCM relies on the B10D Sun Load and Ambient Light and Security Indicator Sensor input to determine if headlamps are required or if daytime running lamps will be activated based on outside lighting conditions. During automatic lamp control, the headlamps will be off during daylight conditions but will turn on when the ambient light sensor detects low ambient light conditions. The ambient light sensor is a light sensitive transistor that varies the voltage signal to the BCM. The BCM provides a 5 volt reference signal and a low reference ground to the ambient light sensor. During low light conditions the BCM will request the low beam headlamps ON by sending a serial data message to the K219 Lighting Control Module. The Lighting Control Module responds by applying pulse width modulated (PWM) voltage to both headlamp low beam control circuits, illuminating the low beam headlamps.

Automatic High Beam Assist (TQ5)

The automatic high beam assist (IntelliBeam) system operates the high beam headlamps ON and OFF automatically when the system is activated and certain conditions are met. The IntelliBeam system consists of a front camera module that detects light and is able to identify approaching vehicles on an even, straight road at a distance of greater than 0.4 km (0.25 mi). The front camera module analyzes light color, intensity, and movement. The IntelliBeam system will turn OFF the high beam headlamps when approaching vehicle headlamps or preceding vehicle taillights are detected by the front camera module. On vehicles equipped with Side Blind Zone Alert, IntelliBeam will proactively turn OFF the high beam headlamps when a vehicle is passing on the left or right side. IntelliBeam can be deactivated when the headlamp dimmer switch is moved from the neutral position to the high beam or flash to pass positions. IntelliBeam can be reactivated by operating the high beam select switch from the neutral position to the high beam position twice within 2 seconds.

IntelliBeam System Activation

- Vehicle ON
- Headlamp switch placed in the AUTO or ON position
- Outside lighting conditions must be dark
- Vehicle speed greater than 25 mph (40 km/h)

IntelliBeam System Operation

The following are conditions that the IntelliBeam system will turn the high beam headlamps off during operation:

- The system detects approaching traffic headlamps
- The system detects preceding traffic tail lamps
- The system detects a vehicle passing to the right or left (SBZA equipped only)
- Ambient light level too high due to towns or twilight situations
- The vehicle’s speed drops below 13 mph (22 km/h)
- Delay

Note: IntelliBeam may not operate properly if any of the following conditions exist:

- Approaching and preceding vehicles lamps are undetectable due to dirt, snow, road spray, smoke, fog, or any other airborne conditions.
- The front camera module and/or side object sensor module(s) is covered with ice, dirt, snow, haze, or is obstructed.
- The vehicle is being driven on winding or hilly road conditions which would make any on coming

vehicle headlamps undetectable by the IntelliBeam.

IntelliBeam System Deactivation

- Manually operating the headlamp switch from neutral to high beam position
- IntelliBeam is deactivated automatically when the front fog lamps are turned ON

IntelliBeam System Indicator

The status of the IntelliBeam system is shown by a green indicator located on the instrument panel cluster. When IntelliBeam is active, the indicator will be illuminated continuously. If the operator deactivates the IntelliBeam system, the indicator will turn off.

Daytime Running Lamps

The daytime running lamps (DRL) will illuminate continuously when the following conditions are met:

- Engine running
- The headlamp switch is in the AUTO position
- Ambient light conditions are daytime conditions

The B10D Sun Load and Ambient Light and Security Indicator Sensor is used to monitor outside lighting conditions. The ambient light sensor provides a voltage signal that will vary between 0.2 and 4.9 volts depending on outside lighting conditions. The K9 Body Control Module (BCM) provides a 5 volt reference signal and a low reference ground to the ambient light sensor. The BCM monitors the ambient light sensor signal circuit to determine if outside lighting conditions are correct for either daytime running lamps (DRL) or automatic lamp control when the headlamp switch is in the AUTO position. In daylight conditions the BCM will send a serial data message to the K219 Lighting Control Module to command the DRLs ON, the Lighting Control Module responds by applying pulse width modulated (PWM) voltage to both DRL control circuits, illuminating the DRLs. During low light conditions the Lighting Control Module will command the low beam headlamps ON.

Hazard Lamps

The hazard flashers may be activated in any power mode. The S26 Hazard Warning Switch signal circuit is momentarily grounded when the hazard switch is pressed. The K9 Body Control Module (BCM) responds to the hazard switch signal input by sending a serial data message to the K219 Lighting Control Module. The Lighting Control Module responds by supplying battery voltage to all turn signal lamps in an ON and OFF duty cycle. When the hazard switch is activated, the BCM also sends a serial data message to the instrument cluster requesting both turn signal indicators to be cycled ON and OFF.

Park, Tail, and License Lamps

When the S30 Headlamp Switch is placed in the HEAD or PARK position, ground is applied to the park lamp switch ON signal circuit to the K9 Body Control Module (BCM). The BCM responds to the park lamp switch signal input by sending a serial data message to the K219 Lighting Control Module. The Lighting Control Module responds by applying battery voltage to the park lamps, tail lamps, and license lamps control circuits illuminating the park, tail, and license lamps.

{T40} Front Fog Lamps

The S30 Headlamp Switch is used to control the fog lights when equipped. The K9 Body Control Module (BCM) provides a 5V signal circuit and low reference circuit to the headlamp switch for backlight dimming and fog light controls. When a dimming/fog light button is pressed, the signal circuit becomes grounded through the appropriate resistor internal to the headlight switch and voltage from the BCM will decrease accordingly. The BCM interprets the signal and responds by sending a serial data message to the K219 Lighting Control Module. The lighting control module responds by applying pulse width modulated (PWM) voltage to the appropriate fog light(s).

{B3L} Running Board Lamps

When equipped (B3L), the running board assist step lamps become illuminated anytime unlock is pressed on the keyless entry transmitter or any door is opened during low ambient light conditions as part of the approach lighting system. The K9 Body Control Module responds to the unlock request or door opening during low ambient light conditions by sending a serial data message to the K4 Running Board Control Module to command the running board assist step lamps on. The running board control module responds by applying voltage to the running board assist step lamp control circuits illuminating the running board assist step lamp LEDs.

Stop Lamps

The B22 Brake Pedal Position Sensor is used to sense the action of the driver application of the brake pedal. The K9 Body Control Module (BCM) provides the brake pedal position sensor with low reference, signal, and 5 volt reference circuits. When the variable signal reaches a voltage threshold indicating the brakes have been applied, the BCM will respond by sending a serial data message to the K219 Lighting Control Module requesting the stop lamps to be turned ON. The Lighting Control Module responds by applying battery voltage to the left and right stop lamp control circuits as well as the center high mounted stop lamp control circuit illuminating the left and right stop lamps and the center high mounted stop lamp. If serial data communication is lost between the BCM and the Lighting Control Module, the Lighting Control Module will receive a serial data message from the Electronic Brake Control Module indicating that the brakes have been applied. If serial data communication is lost between all three modules, the Lighting Control Module also receives a hard wired voltage signal from the BCM to signal the brake lamps ON.

Turn Signal Lamps

Turn Signals

The K9 Body Control Module (BCM) provides the S78 Turn Signal Switch with left and right turn signal switch signal circuits. Ground is applied at all times to the turn signal/multifunction switch. The turn signal lamps may only be activated with the ignition switch in the ON or START positions. When the turn signal/multifunction switch is placed in either the turn right or turn left position, ground is applied to the BCM through either the right turn or left turn signal switch signal circuit. The BCM responds to the turn signal switch input by sending a serial data message to the K219 Lighting Control Module. The Lighting Control Module responds by applying a pulsating voltage to the turn signal lamps through there respective control circuits. When a turn signal request is received by the BCM, a serial data message is also sent to the instrument cluster requesting the respective turn signal indicator be pulsed ON and OFF.

Turn Signal Outage Detection

Vehicles with LED turn signals require additional turn signal outage detection circuits that provide turn signal feedback to the K219 Lighting Control Module. The Lighting Control Module uses the feedback information to send a serial data message to the instrument cluster to alert the driver anytime a turn signal fault is detected. If a fault is detected on a turn signal circuit or a turn signal feedback circuit, the turn signals will flash in a rapid manner to alert the driver of the fault.

Turn Signal Animation

When the K219 Lighting Control Module receives a serial data message from the K9 Body Control Module (BCM) that the turn signals are being commanded on, the lighting control module responds by applying voltage to the sequential turn lamp enable signal circuit 10749. With voltage applied to the sequential turn lamp enable signal circuit, the front and rear lamps respond by applying an animation effect to the turn signal lamp within the lamp assembly. A fault on the sequential turn lamp enable signal will inhibit the animation effect, however normal turn signal operation will still take place.

Backup Lamps

With the engine running and the transmission in the reverse position, the transmission control module (TCM) sends a serial data message to the multiple control modules. The message indicates that the gear selector is in the reverse position. The K9 Body Control Module (BCM) responds to the reverse position message by sending a serial data message to the K219 Lighting Control Module to request the backup lamps on. The Lighting Control Module responds by applying battery voltage to the backup lamps control circuit(s) illuminating the backup lamps. The applied voltage is also sent to the A11 Radio and A10 Inside Rearview Mirror for rearview camera purposes. Once the driver moves the gear selector out of the reverse position, a serial data message is sent by the TCM that the transmission is no longer in the reverse position. The BCM responds to the reverse position message by sending a serial data message to the Lighting Control Module to request the backup lamps off. The Lighting Control Module responds by removing battery voltage from the backup lamp circuits. The engine must be running for the backup lamps to operate.

Exterior Courtesy Lamps

The body control module (BCM) supplies battery voltage to each exterior door handle LED backlighting circuit, the LED lighting located under each outside rearview mirror for approach lighting, and both running board step courtesy lamps when equipped. When the keyless entry transmitter is operated to either the lock or unlock functions the LED lighting located under each outside rearview mirror, exterior door handles, and both running board steps are commanded ON for approach lighting.

Battery Run Down Protection/Inadvertent Power

To provide battery run down protection, the exterior lamps will be deactivated automatically under certain conditions. The K9 Body Control Module (BCM) monitors the state of the S30 Headlamp Switch. If the headlamp switch is in the park or headlamp position when the ignition switch is ON and then the ignition switch is placed in the OFF position, the BCM initiates a 10 minute timer. At the end of the 10 minutes, the BCM will send a serial data message to the K219 Lighting Control Module to deactivate the exterior lamps to prevent total battery discharge. This feature will be cancelled if any power mode other than OFF becomes active.

The BCM will disable battery run down protection if any of the following conditions exist:

- The park or headlamp switch is changed from the ON to OFF position, and back to the ON position during battery run down protection.
- The BCM determined that the park or headlamp switch was not active when the ignition was turned OFF.

Interior Lighting Systems Description and Operation

Interior Lamps

The interior lighting system consist of two groups. This first group includes lamps that are not be dimmed.

- Dome/reading lamps
- Door Sill Plate Lamps (B7G/S0M)
- Instrument panel compartment lamp
- Instrument panel courtesy lamps
- Overhead console accent lamp
- Rear compartment courtesy lamp
- Sunshade mirror lamps

Dome Lamps

The dome lamps are controlled by door ajar inputs to the K9 Body Control Module (BCM). When any door is opened, the door ajar switch contacts close and the BCM receives a door-open input. The BCM illuminates the dome lamp when any door is opened or a door lock/unlock request is activated with the key fob. After all doors have been closed, the dome lamp will remain illuminated approximately 3 seconds after the last door closes. In the event that the dome lamp were to remain illuminated for more than 10 minutes with the ignition switch in the OFF position, the BCM will deactivate the dome lamp control circuit to prevent total battery discharge. The dome lamps will turn OFF using the theater dimming feature when controlled by the BCM.

Door Sill Plate Lamps (B7G/S0M)

The K9 Body Control Module (BCM) detects anytime an exterior door is opened. The BCM responds by applying voltage to the door sill illumination lamp control circuits illuminating the door sill lamps anytime a door is opened as part of entry lighting.

Keyless Entry Interior Illumination

When the operator uses the keyless entry transmitter in order to unlock the doors, the K9 Body Control Module (BCM) receives a door-unlock signal. The BCM must receive inputs from various systems that indicate that the ignition switch is OFF, the courtesy lamp switch is OFF, and all doors are closed before the BCM will activate the interior lamps. After all doors have been closed, the courtesy lamps will turn OFF immediately if the ignition switch is turned to the ON position, the door locks are LOCKED, or approximately 20 seconds after the last door closes. The BCM will turn off the courtesy lamps through the theater dimming feature. The BCM keeps the courtesy lamps on for 40 seconds after an alarm event is completed.

Instrument Panel Compartment Lamp

The inadvertent power supply voltage circuit from the K9 Body Control Module (BCM) provides battery voltage to the instrument panel compartment (glove box) lamp. When the instrument panel compartment is opened, the instrument panel compartment lamp switch contacts close providing a path to ground and the instrument panel compartment lamp illuminates. If the operator inadvertently leaves the instrument panel compartment door open with the instrument panel compartment lamp ON, the BCM will turn all interior lamps OFF after 10 minutes has passed to prevent total battery discharge.

Reading Lamps

The inadvertent power supply voltage circuit from the K9 Body Control Module (BCM) provides battery positive voltage to each reading lamp. When a reading lamp switch is activated, the switch contacts close providing a path to ground and the reading lamp illuminates. If the operator inadvertently leaves a reading lamp ON, the BCM will turn all interior lamps OFF after 10 minutes has passed to prevent total battery discharge.

Rear Compartment Courtesy Lamps

When the rear compartment is opened, the rear compartment lid latch opens providing a rear compartment open input signal to the K9 Body Control Module (BCM). The BCM responds by applying battery voltage to the rear compartment courtesy lamp control circuit illuminating the rear compartment courtesy lamps. If the operator inadvertently leaves the rear compartment lid open, the BCM will turn all interior lamps OFF after 10 minutes has passed to prevent total battery discharge.

Sunshade Mirror Lamp
The inadvertent power supply voltage circuit from the K9 Body Control Module (BCM) provides battery voltage to the passenger side sunshade mirror lamp. When the sunshade mirror cover is opened, a switch closes providing ground and the sunshade lamp illuminates. If the operator inadvertently leaves the sunshade mirror cover open with the lamp ON, the BCM will turn all interior lamps OFF after 10 minutes has passed to prevent total battery discharge.

Interior Lamps Dimming

The second group includes lamps which may be dimmed. This group may use a combination of light emitting diodes (LED), incandescent lamps, and pulse width modulation (PWM) voltage illumination.

- Audio/Video Input Adapter
- Door lock switch – driver
- Door lock switch – passenger
- Door handle switch – driver interior
- Door handle switch – passenger interior
- Hazard switch
- Hood/liftgate release switch
- HVAC control head assembly
- Ignition mode switch
- Instrument panel dimmer switch
- Multifunction switch – center console
- Multifunction switch – instrument panel
- Outside rearview mirror switch
- Park brake switch
- Radio
- Rear compartment lid unlatch switch
- Seat memory switch – driver
- Seat memory switch – passenger
- Steering wheel controls switch – left
- Steering wheel controls switch – radio presets
- Steering wheel controls switch – radio volume
- Window switch – driver
- Window switch – passenger

With the headlamp switch in the PARK or HEAD position, the park lamp switch signal circuit provides an input to the K9 Body Control Module (BCM). The BCM responds by applying voltage to the backlight dimming control circuits illuminating all components with interior backlighting. All interior backlighting turns on at the dimming level set by the dimmer buttons within the headlamp switch. The headlamp switch is used to increase and decrease the brightness of the interior backlighting components. The BCM provides a signal circuit and a low reference circuit to the headlamp switch for backlight dimming. When a dimming button is pressed, the signal circuit becomes grounded through the appropriate resistor internal to the headlight switch and voltage from the BCM will decrease accordingly. The BCM interprets the signal and responds in two ways. The BCM applies a pulse width modulated (PWM) voltage through the LED dimming control circuits illuminating the interior backlighting to the requested level of brightness. The BCM also sends a serial data message to the appropriate control modules requesting all dimming components to be illuminated to the same level of brightness.

Battery Rundown Protection/Inadvertent Power

The K9 Body Control Module (BCM) inadvertent power supply voltage circuit provides battery voltage to all of the interior courtesy lamps. In the event that any of these lamps were to remain illuminated for a period of more than 10 minutes with the ignition switch in the OFF position, the BCM will deactivate the inadvertent power supply voltage circuit to prevent total battery discharge. If the ignition switch is turned to any position other than OFF, or if a lamp switch is activated during this 10 minute period, the timer resets for another 10 minutes.

Mirrors

Schematic and Routing Diagrams

6613298

Inside Rearview Mirror Schematics (Inside Rearview Mirror (DD8 / DRZ))

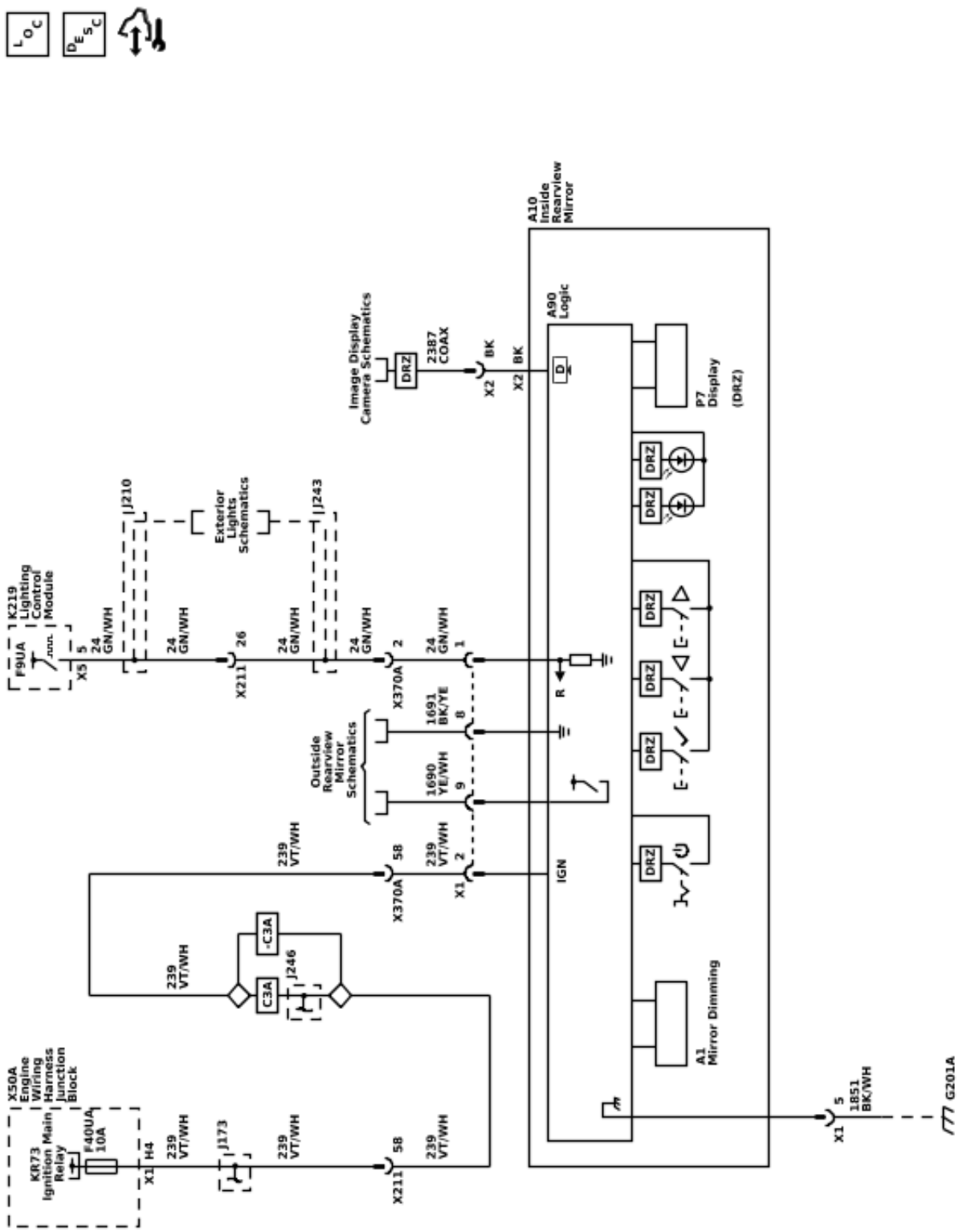

6613299

Outside Rearview Mirror Schematics (Controls, Driver Position, and Folding)

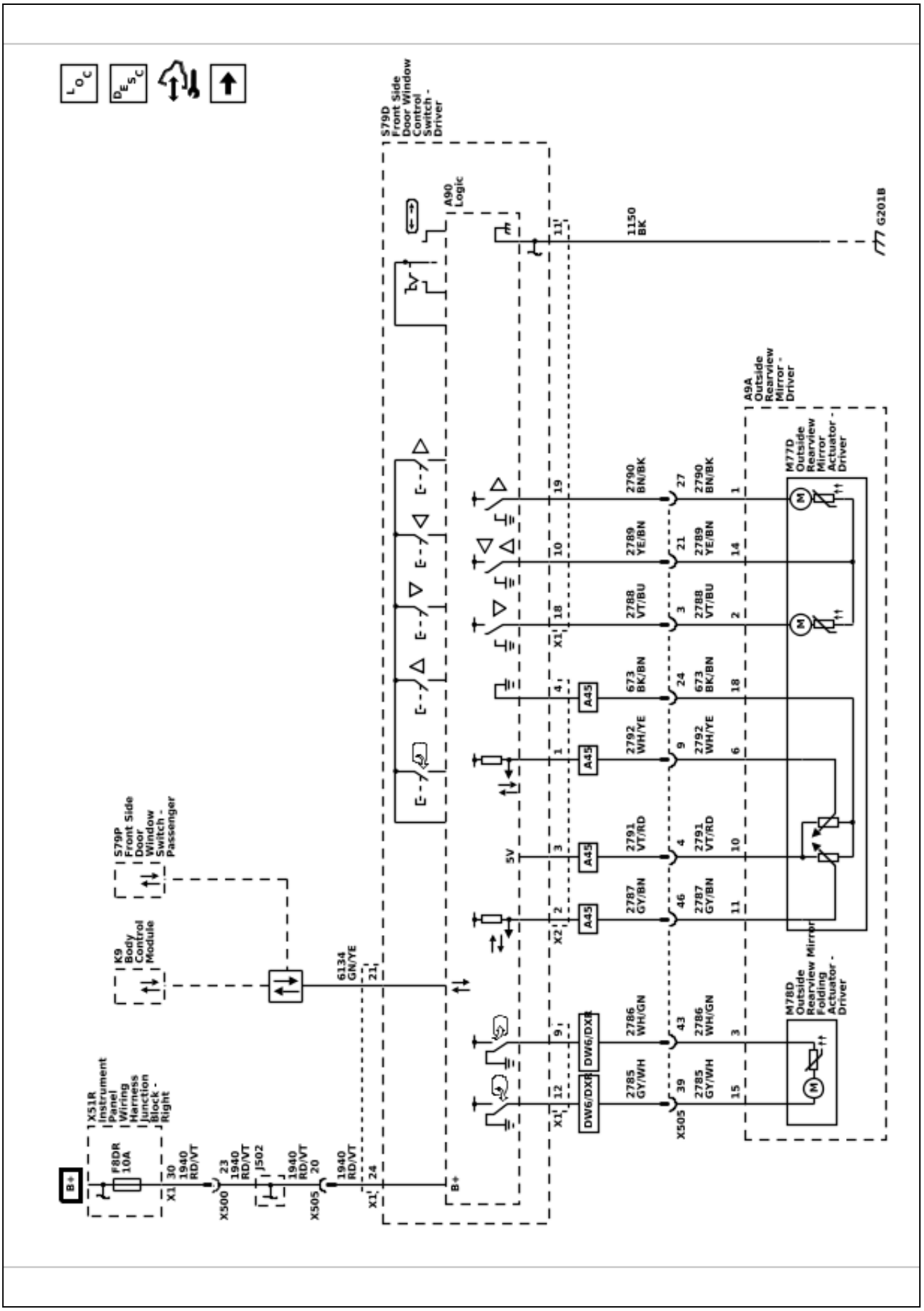

6613300

Outside Rearview Mirror Schematics (Passenger Position and Folding)

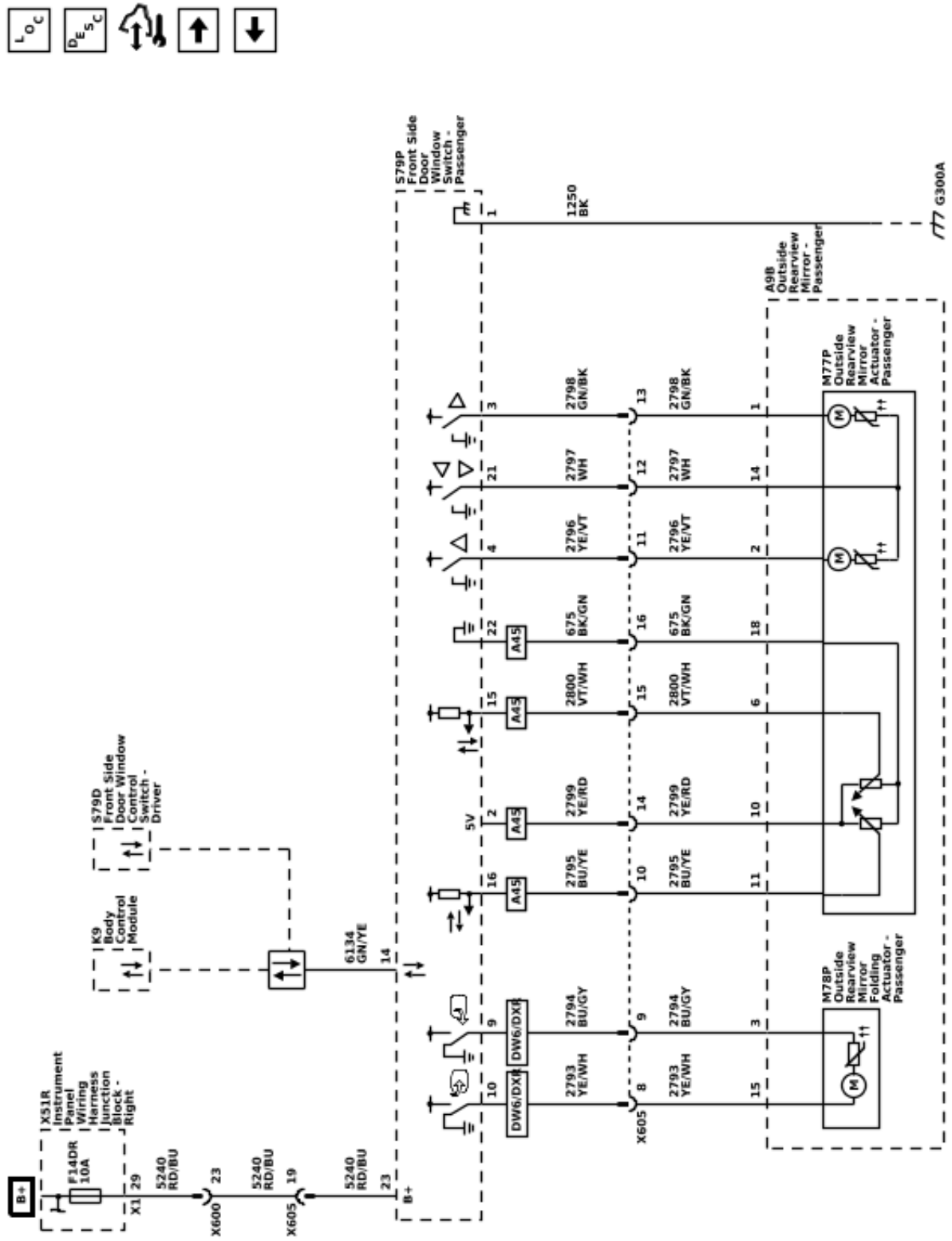

6613301

Outside Rearview Mirror Schematics (Dimming and Heating)

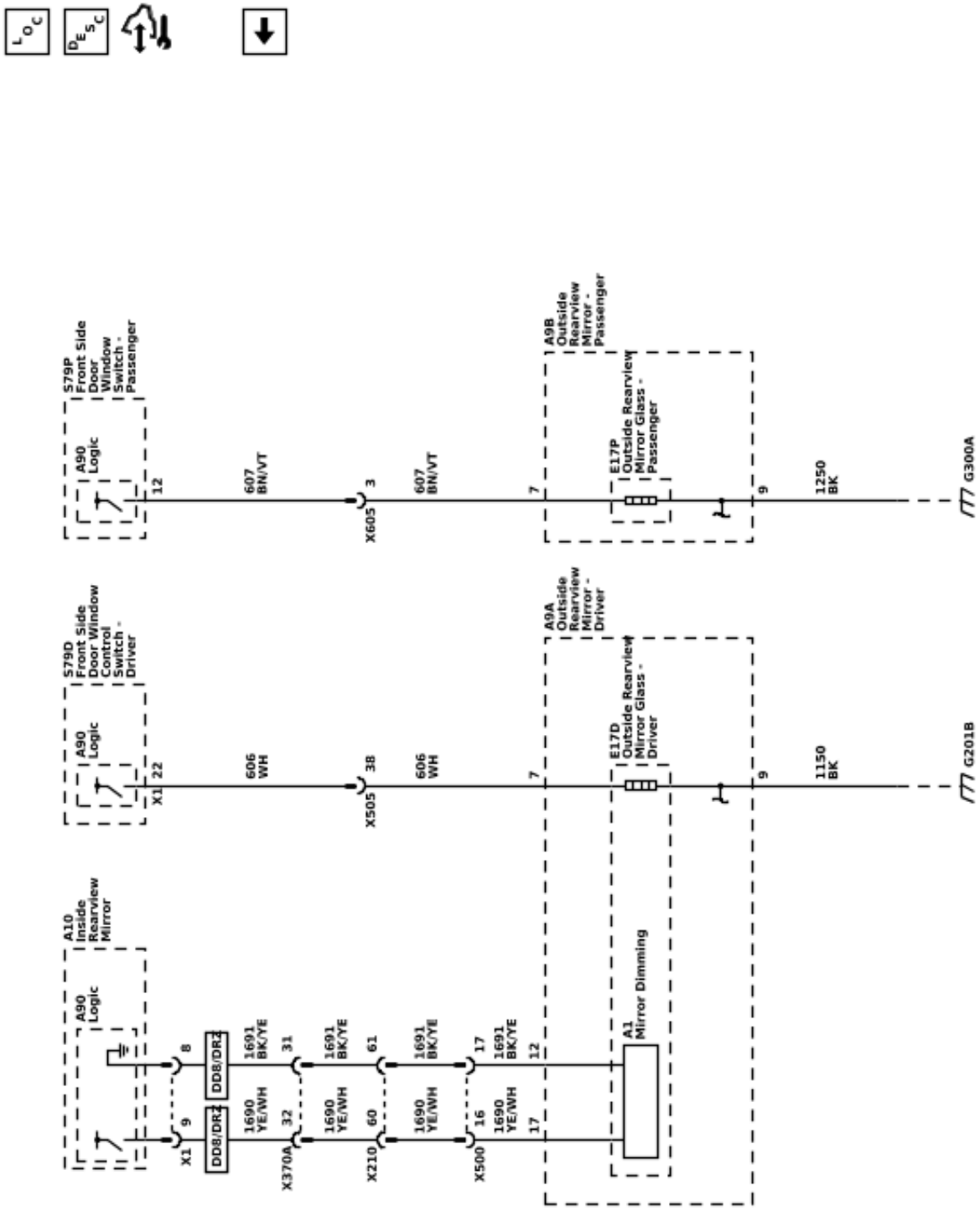

Description and Operation

Outside Mirror Description and Operation

Power Mirror System Components

The power mirror system consists of the following components:

- Body Control Module
- Driver Seat Adjuster Memory Module
- Outside Mirror Switch
- Passenger Window Switch
- Left Outside Rearview Mirror
- Right Outside Rearview Mirror

Power Mirror System Controls

The outside rearview mirror switch is part of the S79D Driver Front Side Door Window Control Switch and uses serial data to control the passenger mirror through the S79P Passenger Front Side Door Window Control Switch. Each S79 Side Door Window Control Switch has it own 12V, ground and data communications circuit along with mirror directional control and mirror fold circuits.

Driver Mirror Controls

The S79D Driver Front Side Door Window Control Switch has internal connections for the driver mirror. When the mirror position switch is active the driver mirror is commanded to move through bi-directional motor control circuits. The motor control circuits are floating while in an inactive state and the switches will apply power and ground to the control circuits as necessary to move the mirror in the commanded direction.

Passenger Mirror Controls

The S79D Driver Front Side Door Window Control Switch uses serial data circuits to communicate the active states for the passenger mirror switch to the S79P Passenger Front Side Door Window Control Switch. The S79P Passenger Front Side Door Window Control Switch has internal connections for the passenger mirror. When the mirror position switch is active the passenger mirror is commanded to move through bi-directional motor control circuits. The motor control circuits are floating while in an inactive state and the switches will apply power and ground to the control circuits as necessary to move the mirror in the commanded direction.

Mirror Position

Mirror position is determined by both horizontal and vertical position sensors in each of the power mirrors. Each S79 Front Side Door Window Control Switch supplies a 5 V reference, low reference, and horizontal and vertical position signal circuits to these sensors. The signal circuits are referenced from 5 V by the S79 Front Side Door Window Control Switch and the signal circuit voltage levels represent the mirror positions. The mirror positions are stored in each S79 Front Side Door Window Control Switch for memory mirror operation. When the memory seat module receives a memory recall command, the memory seat control module will send the go to position to the S79 Front Side Door Window Control Switch. The S79 Front Side Door Window Control Switches will then drive the appropriate mirror motors to the commanded position sensor settings.

Mirror Select

The S79D Driver Front Side Door Window Control Switch has internal connections for the mirror select switch. When the mirror select switch is active the S79 Front Side Door Window Control Switch will either control the driver mirror or send a serial data message to control the passenger mirror.

Folding Mirrors

The S79D Driver Front Side Door Window Control Switch sends the mirror fold/unfold inputs to the K9 Body Control Module (BCM) through serial data. When the BCM receives a fold/unfold signal it will send a fold/unfold command to the S79 Driver Front Side Door Window Control Switch which will send a serial data message to the S79P Passenger Front Side Door Window Control Switch. The outside mirrors will fold or unfold depending on their current state. The BCM will also send a serial data message to unfold the mirrors when the vehicle reaches 20 km/h (12 mph) unless equipped with camper/trailer mirrors. The S79 Front Side Door Window Control Switches control the fold/unfold motors through bi-directional control circuits

Heated Mirrors

The heated mirrors are controlled through each S79 Front Side Door Window Control Switch. When the vehicle is running and the HVAC control module receives a rear window defog request from the radio/HVAC controls, the HVAC control module will send a serial data message to the S79D Driver Front Side Door Window Control Switch and S79P Passenger Front Side Door Window Control Switch. Each S79 Front Side Door Window Control Switch provide B+ voltage to the driver and passenger outside rearview mirror heating elements.

Trailering Systems

Schematic and Routing Diagrams

Trailering Systems Schematics (Trailer Lamp Control Module and Trailer Connector Pins: A, B, D, E, F, G (UET))

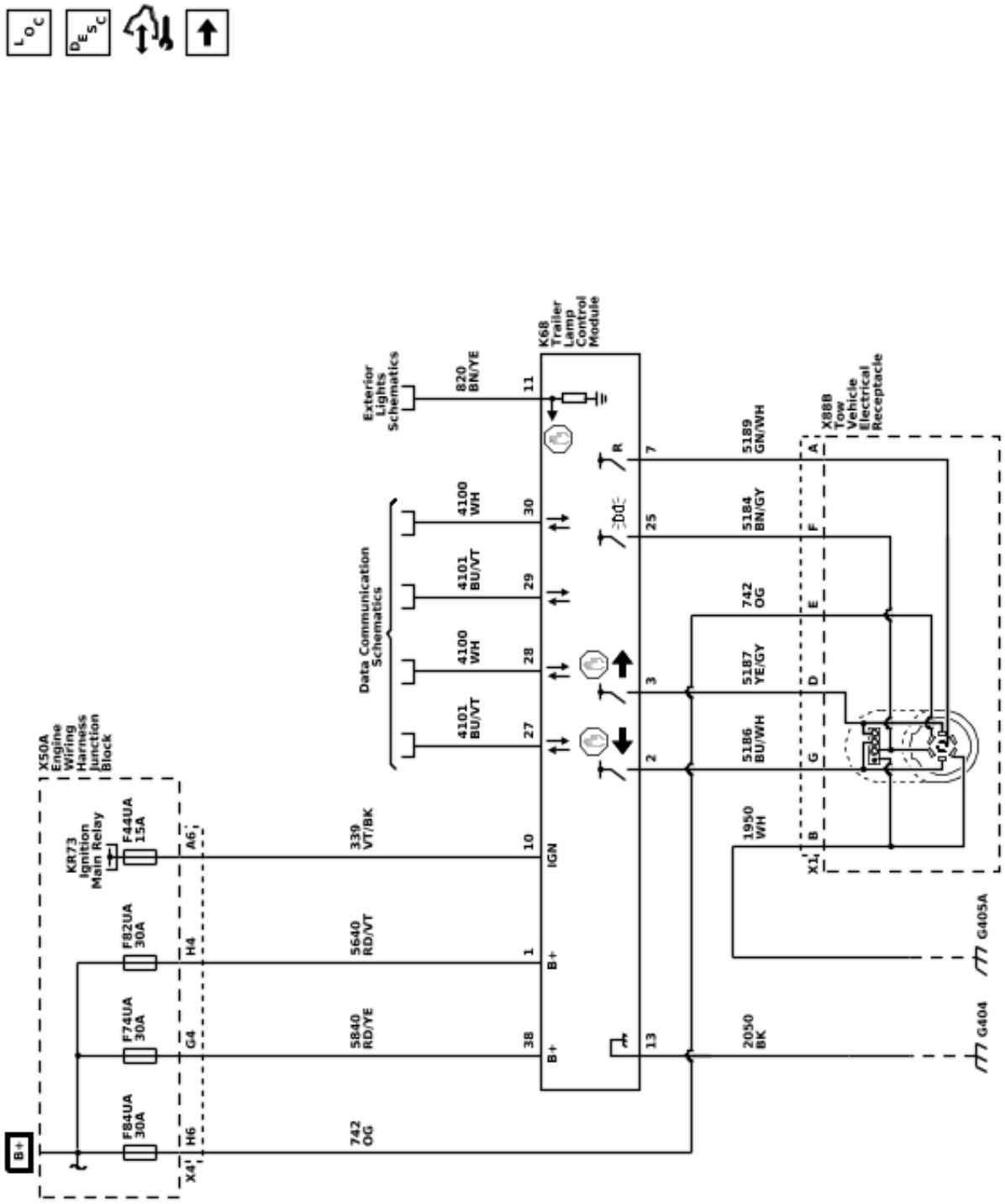

Trailering Systems Schematics (Trailer Connector Pins: A, B, D, E, F, G (- UET))

6613303

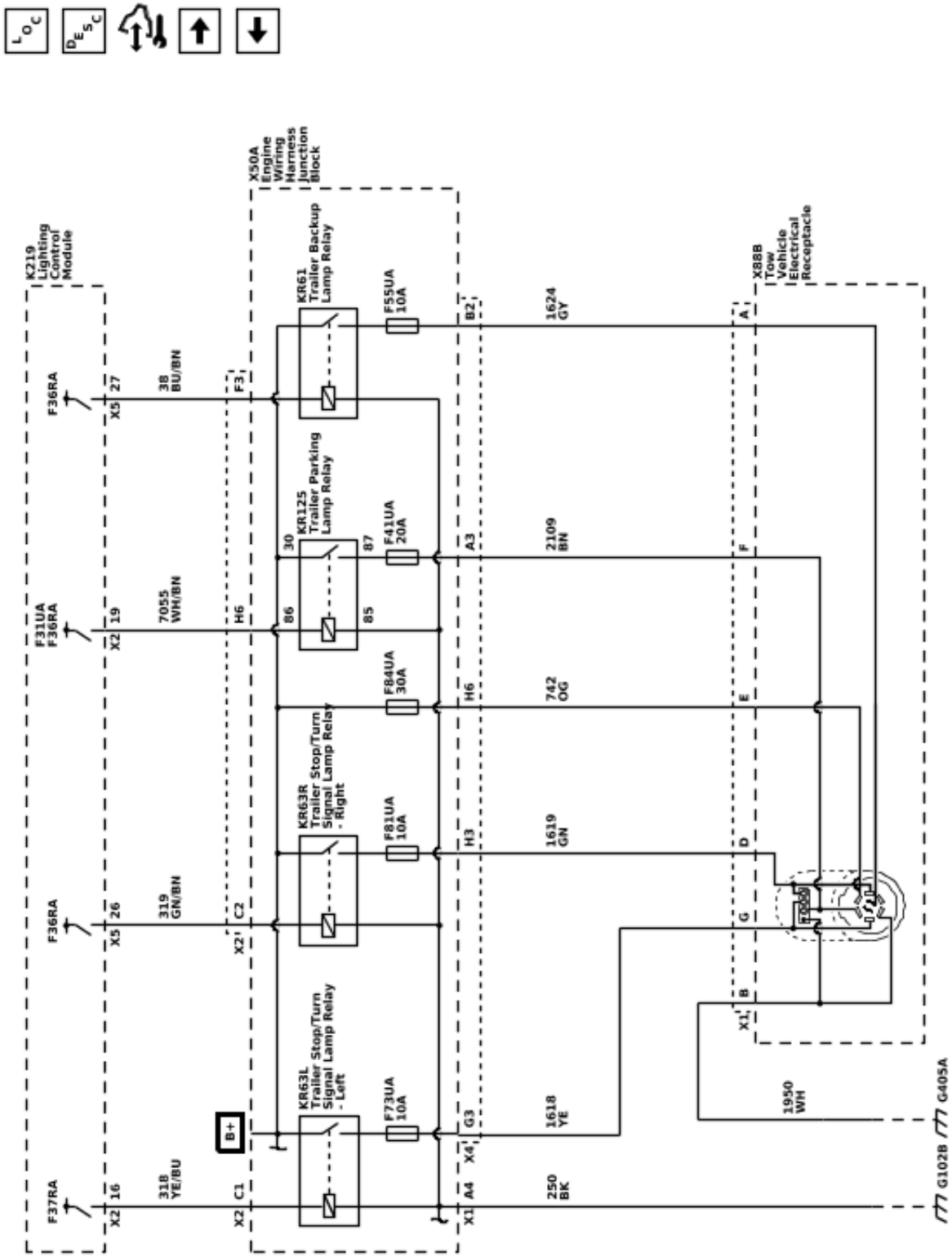

6613304

Trailering Systems Schematics (Trailer Brakes Provision (- JL1))

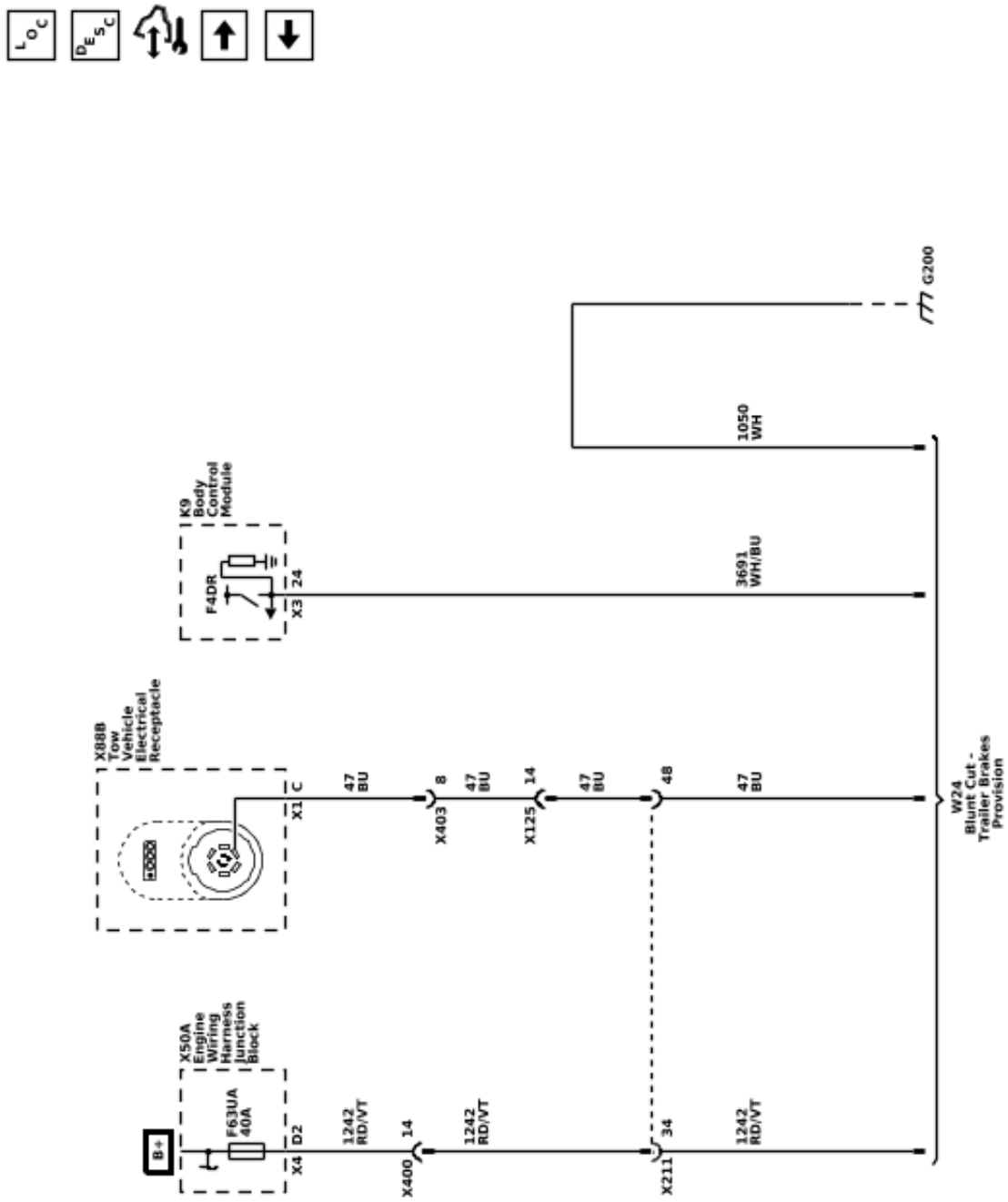

6613305

Trailering Systems Schematics (Trailer Brake and Trailer Connector Pin: C (JL1))

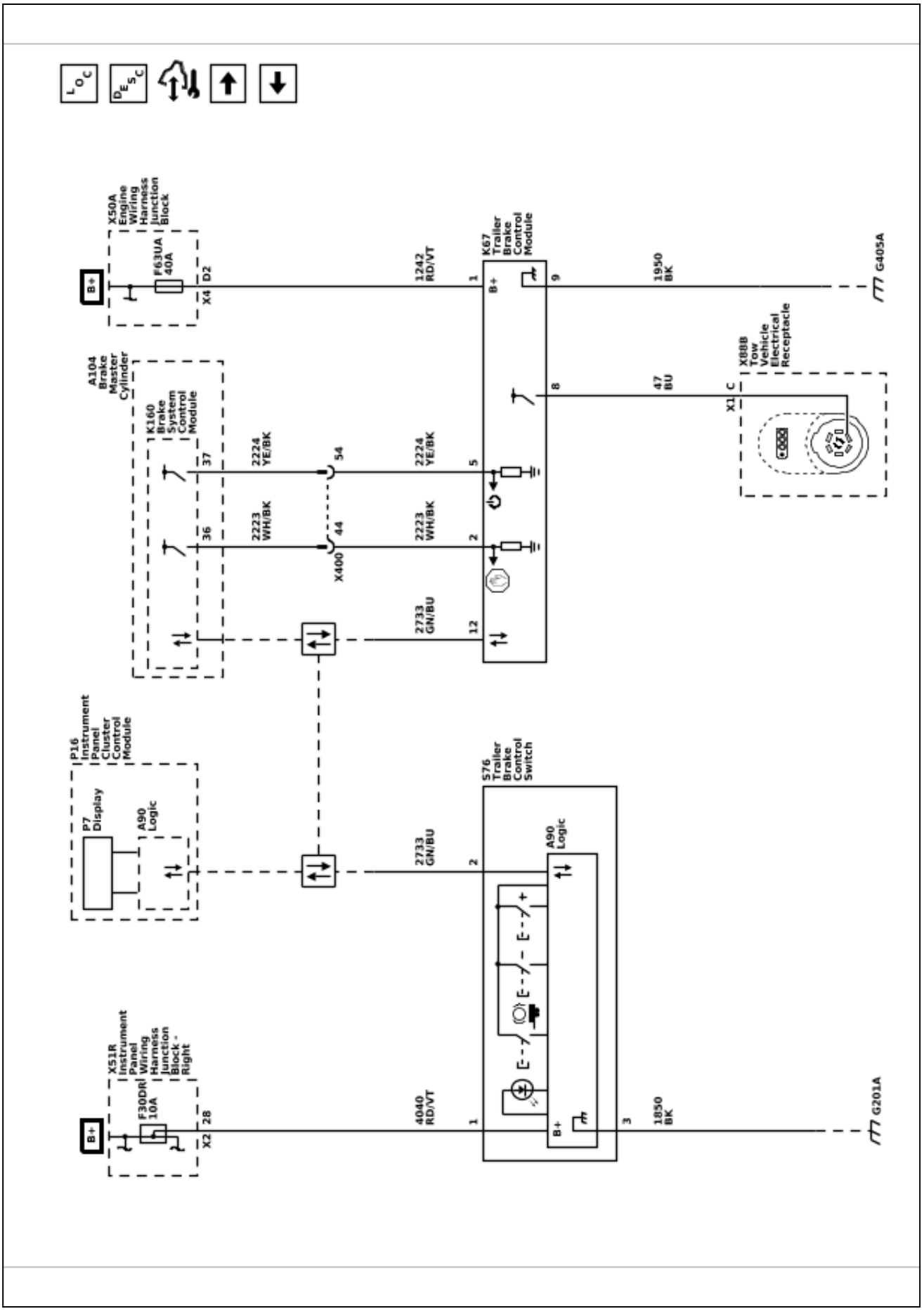

6613306

Trailering Systems Schematics (Trailer Tire Pressure (UET))

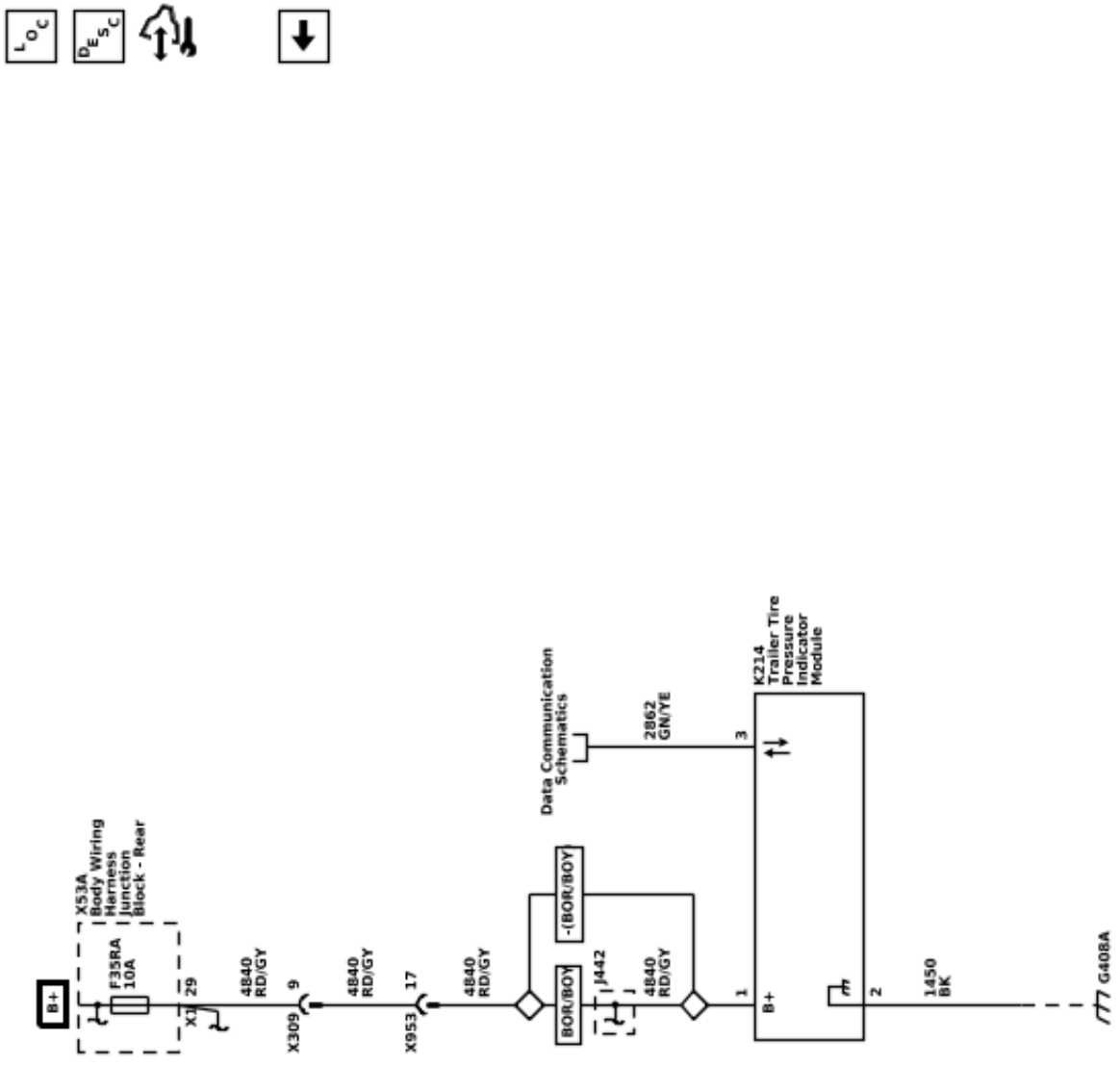

Description and Operation

Trailering Description and Operation

Trailering System Overview

Begin the trailering system diagnosis with [Link target (target-id 325938-) not found] . The Diagnostic System Check - Trailering will provide a complete strategy to locate and repair a vehicle trailering electrical fault. Not following this strategy may cause additional diagnostic time and/or misdiagnosis.

The trailering system consists of the following:

- Trailer Lighting, refer to [Link target (target-id 326023-) not found] for additional diagnostic information.
- Trailer Brakes, refer to [Link target (target-id 326020-) not found] for additional diagnostic information.
- Trailer Battery Charging System, refer to [Link target (target-id 326019-) not found] for additional diagnostic information.
- Trailer Detection, refer to [Link target (target-id 326022-) not found] for additional diagnostic information.
- Trailer Tire Pressure Monitoring System, refer to [Link target (target-id 326024-) not found] for additional diagnostic information.
- Trailer Theft Detection.

When a trailer is detected on a vehicle equipped with side blind zone detection, rear park assist, and/or rear cross traffic alert, the vehicle will automatically turn these features off. These features are turned off to prevent false detections due to the trailer obstructing the view of the sensors.

7–Terminal Tow Vehicle Electrical Receptacle Pinout (North America)

- Terminal A – Trailer Backup Lamp Control
- Terminal B – Ground
- Terminal C – Trailer Brake Control
- Terminal D – Right Trailer Stop/Turn Signal Lamp Control
- Terminal E – B+
- Terminal F – Trailer Park Lamp Control
- Terminal G – Left Trailer Stop/Turn Signal Lamp Control

13–Terminal Tow Vehicle Electrical Receptacle Pinout (Export)

- Terminal 1 – Left Trailer Turn Signal Lamp Control
- Terminal 2 – Trailer Fog Lamp Control
- Terminal 3 – Ground
- Terminal 4 – Right Trailer Turn Signal Lamp Control
- Terminal 5 – Right Trailer Park Lamps Control
- Terminal 6 – Trailer Stop Lamps Control
- Terminal 7 – Left Trailer Park Lamps Control
- Terminal 8 – Trailer Backup Lamp Control
- Terminal 9 – B+
- Terminal 10 – Ignition Voltage
- Terminal 11 – Ground
- Terminal 12 – Trailer Connected Signal
- Terminal 13 – Ground

Connecting Aftermarket Accessories

- Some aftermarket accessories that connect to the X88 Tow Vehicle Electrical Receptacle will be recognized by the vehicle as a trailer connected, even if the accessory is not a trailer. As a result, side blind zone detection, rear park assist, and/or rear cross traffic alert will be turned off anytime the vehicle detects a trailer/accessory is connected.
- Vehicles equipped with U1D/UET have trailer theft detection that constantly monitors trailer connected status when enabled. This is done by randomly pulsing the lighting circuits of the trailer when the vehicle is parked. As a result, some aftermarket accessories may be turned ON/OFF when connected to the vehicle with theft detection enabled.
- Vehicles equipped with U1D/UET use pulse width modulation voltage (PWM) for trailer lighting functions. Some aftermarket accessories are incompatible with PWM and may not function correctly when connected to the trailer lighting circuits of the vehicle.

Trailer Battery Charging System

Trailer battery charging is accomplished through constant battery voltage from the X50A Engine Wiring Harness Junction Block to the X88 Tow Vehicle Electrical Receptacle. Battery voltage is supplied to terminal E at the X88 Tow Vehicle Electrical Receptacle at all times. If equipped, the trailer battery will constantly be charged by the vehicle's electrical system anytime the trailer is connected. Some trailers require the B+ circuit to the X88 Tow Vehicle Electrical Receptacle for the trailer brakes to function.

Trailer Lighting and Detection With U1D/UET

Note:

- Some trailers utilize a trailer mounted control module to operate some or all of the trailer lights. These trailers may use the B+ circuit from the trailer connector to power the trailer lighting

circuits. These trailers may not always be detected by the Trailer Lighting Control Module and may set faults.

- Vehicles equipped with IOR/1FL do not come equipped with the trailering APP however may still be equipped with a K68 trailer Lamp Control Module.

North America (7-Terminal connector)
North American vehicles use a 7-way trailer connector for trailering features. The K68 Trailer Lamp Control Module is responsible for controlling the trailer lighting on vehicles with U1D/UET. The combined trailer stop/turn signal lamps of the trailer must draw at least 55mA of total current to be detected as a trailer or the Trailer Lamp Control Module will not control the lighting circuits. The Trailer Lamp Control Module receives serial data messages from the K9 Body Control Module (BCM) indicating what lamps have been activated on the vehicle. The Trailer Lamp Control Module responds by applying pulse width modulated voltage (PWM) to the appropriate control circuits for the requested lamps illuminating the lamps on the attached trailer. The Trailer Lamp Control Module constantly monitors for trailer connection status, trailer lighting faults, and trailer theft deterrent purposes. This is accomplished through the lighting circuits of the trailer to determine if a trailer is connected. When a trailer is connected, the Trailer Lamp Control Module senses the trailer connection and alerts the driver by requesting a trailer profile setup through the Trailering App, which is displayed on the infotainment screen. If a trailer is disconnected with the ignition ON, the vehicle will display multiple trailer lighting messages until a trailer is reconnected or the message is dismissed by the user. With the key OFF, the Trailer Lamp Control Module will periodically pulse the lighting circuits of the trailer to verify it is still connected. The lights on the trailer may flash at different intervals with the key OFF depending on which type of lights the trailer is built with. If a trailer is disconnected with the key ON, the vehicle will display a trailer disconnected message until a trailer is reconnected or the ignition is cycled.

Export (13-Terminal connector)
Export vehicles use a 13-way trailer connector for trailering features. The K68 Trailer Lamp Control Module is responsible for controlling the trailer lighting on vehicles with U1D/UET. The combined trailer turn signal and park lamps of the trailer must draw at least 55mA of total current to be detected as a trailer or the Trailer Lamp Control Module will not control the lighting circuits. The Trailer Lamp Control Module receives serial data messages from the K9 Body Control Module (BCM) indicating what lamps have been activated on the vehicle. The Trailer Lamp Control Module responds by applying pulse width modulated voltage (PWM) to the appropriate control circuits for the requested lamps illuminating the lamps on the attached trailer. The Trailer Lamp Control Module constantly monitors for trailer connection status, trailer lighting faults, and trailer theft deterrent purposes. This is accomplished through the lighting circuits of the trailer to determine if a trailer is connected. With the key OFF, the Trailer Lamp Control Module will periodically pulse the lighting circuits of the trailer to verify it is still connected. The lights on the trailer may flash at different intervals with the key OFF depending on which type of lights the trailer is built with.

Trailer Lighting Without U1D/UET

The K219 Lighting Control Module is responsible for controlling the trailer lighting on vehicles without U1D/UET. The lighting control module receives serial data messages from the K9 Body Control Module (BCM) indicating what lamps have been activated on the vehicle. The lighting control module responds by applying voltage to the appropriate relay control circuits for the requested lamps anytime the vehicle lamps are commanded ON. With the relay coil energized, the relay contacts close and allow voltage to flow through the relay illuminating the appropriate lamps on the attached trailer.

North America 7–Way Trailer Connector Trailer Messages

The driver information center (P16 Instrument Cluster) or infotainment screen (P17 Info Display Module) may display one or more of the following messages to the user related to trailering.

North America 7–Way Trailer Connector

Trailering Message	Description
Check Trailer Left Turn Signal Lamp	The K68 Trailer Lighting Control Module detects a fault on the left trailer stop/turn lamp control circuit
Check Trailer Right Turn Signal Lamp	The K68 Trailer Lighting Control Module detects a fault on the right trailer stop/turn lamp control circuit
Check Trailer Rear Lamp	The K68 Trailer Lighting Control Module detects a fault on the trailer park lamp control circuit.

Trailering Message	Description
Check Trailer Reversing Lamp	The K68 Trailer Lighting Control Module detects a fault on the trailer backup lamp control circuit.
Check Trailer Brake Lamps	The K68 Trailer Lighting Control Module detects a fault on the left and/or right trailer stop/turn lamp control circuits
{JL1} Check Trailer Wiring	The K67 Trailer Brake Control Module detects a fault on the trailer brake control circuit or the trailer was disconnected.
Lane Change Alert Off	Reminder to the user that lane change alerts are turned off anytime a trailer is detected.
Rear Cross Traffic Alert Off	Reminder to the user that rear cross traffic alerts are turned off anytime a trailer is detected.
Rear Park Assist Off	Reminder to the user that rear park assist is turned off anytime a trailer is detected.
Remember to turn On Tow/Haul Mode	Reminder to the user to turn ON Tow/Haul Mode when towing.
{JL1} Service Trailer Brake System	The K67 Trailer Brake Control Module detects a fault on the trailer brake control circuit.
Service Trailer Tire Monitor System	The K214 Trailer Tire Pressure Indicator Module detects one or more issues with the trailer tire pressure monitoring system.
Trailer Detected	The K68 Trailer Lighting Control Module detects a trailer has been connected to the X88 Trailer Connector.
{JL1} Trailer Brakes Detected	The K67 Trailer Brake Control Module detects a trailer with trailer brakes has been connected to the X88 Trailer Connector.
Trailer Disconnected Check Connection	The K68 Trailer Lighting Control Module detects a trailer has been disconnected from the X88 Trailer Connector.
Trailer Tire Pressure High	The K214 Trailer Tire Pressure Indicator Module detects one or more of the trailer tire pressures is high.
Trailer Tire Pressure Low	The K214 Trailer Tire Pressure Indicator Module detects one or more of the trailer tire pressures is low.
Trailer Tire Sensor Fault	The K214 Trailer Tire Pressure Indicator Module detects one or more of the trailer tire pressure sensors has a fault.
Trailer Tire Temperature High	The K214 Trailer Tire Pressure Indicator Module detects one or more of the trailer tire temperatures is too high.

Export 13–Way Trailer Connector Trailer Messages

The driver information center (P16 Instrument Cluster) or infotainment screen (P17 Info Display Module) may display one or more of the following messages to the user related to trailering.

Export 13–Way Trailer Connector

Trailering Message	Description
Check Trailer Left Turn Signal Lamp	The K68 Trailer Lighting Control Module detects a fault on the left trailer turn lamp control circuit
Check Trailer Right Turn Signal Lamp	The K68 Trailer Lighting Control Module detects a fault on the right trailer turn lamp control circuit
Check Trailer Rear Lamp	The K68 Trailer Lighting Control Module detects a fault on one or both of the trailer park lamp control circuit(s).
Check Trailer Reversing Lamp	The K68 Trailer Lighting Control Module detects a fault on the trailer backup lamp control circuit.
Check Trailer Brake Lamps	The K68 Trailer Lighting Control Module detects a fault on the trailer stop lamp control circuit.
Check Trailer Rear Fog Lamp	The K68 Trailer Lighting Control Module detects a fault on the trailer fog lamp control circuit.

Trailering Message	Description
Lane Change Alert Off	Reminder to the user that lane change alerts are turned off anytime a trailer is detected.
Rear Cross Traffic Alert Off	Reminder to the user that rear cross traffic alerts are turned off anytime a trailer is detected.
Rear Park Assist Off	Reminder to the user that rear park assist is turned off anytime a trailer is detected.

Trailer Theft Detection (With U1D/UET Only)

Trailer theft monitoring can be turned ON and OFF through the vehicle Trailer App. When enabled, any time the trailer theft deterrent system is armed, the trailer lighting circuits are constantly monitored to determine if a trailer is connected for trailer theft deterrent purposes. With the key OFF, the K68 Trailer Lamp Control Module will randomly pulse the lighting circuits of the trailer to verify it is still connected by monitoring the voltage drop of the circuit. Depending on the configuration of the trailer lights, the trailer lights may randomly flash as part of the trailer theft deterrent function. These flashes correspond to when the K68 Trailer Lamp Control Module pulses the lighting circuits to ensure the trailer is still connected and is considered normal. If the trailer is disconnected while the trailer theft deterrent system is armed, the vehicle will flash the exterior lights and cycle the horn to alert of a trailer theft event. Refer to *Theft Systems Description and Operation 7-86* for more information on the content theft deterrent system.

Trailer Brakes (JL1)

The vehicle is equipped with the following trailer braking components:

- K160 Brake System Control Module
- K67 Trailer Brake Control Module
- S76 Trailer Brake Control Switch
- Trailer Brake Driver Information Center Display

Trailer Brake Circuits

- Circuit 2223 is the trailer brake apply signal circuit. The K160 Brake System Control Module receives vehicle braking force data and/or data from the application of the manual trailer brake slide lever. The brake system control module responds by applying the appropriate amount of pulse width modulated (PWM) voltage based on the amount of trailer brake application desired. The K67 Trailer Brake Control Module responds to the signal circuit by applying the appropriate amount of PWM voltage to the trailer auxiliary control circuit 47.
- Circuit 2224 is the trailer brake enable signal circuit. The K160 Brake System Control Module applies voltage to the enable circuit anytime a LIN data communication fault is not present, a trailer is connected, and the vehicle brakes are being applied. The enable circuit must have voltage applied to it before the K67 Trailer Brake Control Module applies the appropriate amount of pulse width modulated (PWM) voltage to the trailer auxiliary control circuit 47.
- Circuit 2733 is the brake system control module LIN bus 2 circuit. The K160 Brake System Control Module, K67 Trailer Brake Control Module, and the S76 Trailer Brake Control Switch all communicate through the brake system control module LIN bus 2 circuit. If the LIN bus has a fault on the circuit, trailer braking will be disabled until the fault is repaired.
- Circuit 47 is the trailer auxiliary control circuit. The K67 Trailer Brake Control Module responds to signal circuit 2223 and enable circuit 2224 by applying the appropriate amount of PWM voltage to the trailer auxiliary control circuit. A properly functioning trailer will apply the appropriate amount of braking force to the brakes of the trailer.

The Trailer Brake Control System is compatible with two types of Trailer Brake Systems as listed below:

1. **Electric Brakes** A controlled electrical output signal energizes an electric-magnet/lever arm assembly that directly actuates the brake mechanism. The GDS name for this system is “Electromagnetic Brakes”.
2. **Electric Over Hydraulic Brakes** A controlled electrical output signal energizes a remote, trailer mounted hydraulic pump to build brake pressure in a closed hydraulic system on the trailer. The hydraulic fluid pressure actuates the brake mechanism. The GDS name for this system is “Electrohydraulic Brakes”.

Trailer Brake Output Versus Trailer Brake Type

- The trailer brake system characterizes the trailer brakes as either Electric Brake or Electric Over Hydraulic Brake automatically. This characterization may be affected by the number, type, and age of the trailer brake magnets, as well as any other devices installed on the trailer brakes (i.e. adapters for Electric Over Hydraulic brake functionality).

- The trailer brake system is fully operational with either characterization.
- Sliding the manual trailer brake apply lever will produce output at zero speed for either characterization.

The user gain allows the driver to adjust the amount of trailer brake output to match the trailer load and road surface. The controller determines the desired trailer brake output and provides a control signal to the K67 Trailer Brake Control Module (TBPM). The K67 Trailer Brake Control Module amplifies the signal and provides the output required to activate the Electric or Electric Over Hydraulic trailer brakes.

The trailer brake control can support up to a maximum of four axles with electric trailer brakes (8 brake magnets).

Connecting a trailer that is not compatible with the trailer brake system may result in reduced or complete loss of trailer braking. There may be an increase in stopping distance or trailer instability which could result in personal injury or damage to the vehicle, trailer or other property. An aftermarket controller may be available for use with incompatible trailer brake systems.

To determine the type of brakes on your trailer and the availability of controllers, check with your trailer manufacturer or dealer. Do not power up an aftermarket controller with the factory brake controller at the same time.

Trailer Brake Control Panel

The S76 Trailer Brake Control Switch contains the trailer gain and manual apply switches. It is located in the vehicle center stack. Refer to the owner's manual for more information on the location. The control panel and switches allows you to adjust the amount of output, referred to as trailer gain, available to the Electric or Electric Over Hydraulic brakes. It also allows you to manually apply the trailer brakes. The trailer brake control switch is used along with the trailer brake display page on the driver information center to adjust and display power output to the trailer brakes.

Manual Trailer Brake Apply

The manual trailer brake apply lever is located on the S76 Trailer Brake Control Switch and is used to apply the trailer's Electric or Electric Over Hydraulic brakes independent of the vehicle's brakes. This lever is used in the trailer gain adjustment procedure to properly adjust the power output to the trailer brakes.

Sliding the lever will apply only the trailer brakes. The power output to the trailer is indicated in the trailer brake display page in the Driver Information Center (DIC). If the vehicle's service brakes are applied while using the manual trailer brake apply lever, the trailer brake control output power will be the greater of the two.

The trailer and the vehicle's brake lamps will come on when either the vehicle's braking or manual trailer brakes are applied.

Trailer Brake Gain Adjustment

Trailer gain should be set for a specific trailering condition and must be adjusted any time vehicle loading, trailer loading or road surface conditions change. It is important to re-adjust trailer gain any time the tow vehicle, trailer loading or road surface conditions change or if you notice trailer wheel lock-up at any time while you are towing.

Setting the trailer gain properly is needed for the best trailer stopping performance. A trailer that is over-gained may result in locked trailer brakes. A trailer that is under-gained may result in not enough trailer braking. Both of these conditions may result in poor stopping and stability of the vehicle and trailer.

Trailer Gain Adjustment Procedure

- Adjust trailer gain in 0.5 step increments up to 10 gain setting by using the gain adjustment +/− buttons on the trailer brake control panel switch. Pressing and holding a gain button will cause the trailer gain to continuously increment or decrement. To turn the output to the trailer off, set the gain to zero.
- Drive the tow vehicle and trailer combination on a level surface representative of the towing condition and free of traffic at approximately 32–40 km/h (20–25 mph) and fully apply the manual trailer brake apply lever mechanism located on the trailer brake control panel switch. Adjusting the trailer gain at slower speeds may result in an incorrect gain setting.
- Adjust the trailer gain to just below the threshold of trailer wheel lock-up . Trailer wheel lock-up may not occur if towing a heavily loaded trailer. In this case, adjust the trailer gain to the highest allowable setting for the towing condition.

Trailer Brake Gain and Output Display
This display menu can be accessed by scrolling through the DIC menu, or any time the trailer gain +/− button is depressed, or the manual trailer brake apply lever is actuated. The trailer output is displayed from 0 to full output and indicates the output power provided to the trailer brakes, relative to the gain setting.

After the electrical connection is made to a trailer equipped with electric brakes or electric over hydraulic brakes, the TRAILER CONNECTED message will be displayed momentarily on the DIC. The Trailer Brake Display Page can be selected on the DIC showing TRAILER GAIN and OUTPUT, after all vehicle related service messages are acknowledged by the driver. Depending on which instrument panel cluster is in the vehicle, the DIC may display dashed lines, a greyed out display, or it may be blank signifying a disconnected trailer or a trailer brake fault condition.

Tow/Haul Mode

Tow/Haul mode is selected through the Ride Control Switch for hauling heavy loads to provide increased performance and vehicle control. Tow/Haul Mode adjusts the transmission shift pattern, steering, and Electronic Stability Contol (ESC) performance.

If the vehicle is turned off with Tow/Haul mode active and then restarted within four hours or less Tow/Haul will remain active. Otherwise, the vehicle will start in Normal mode.

If equipped with a diesel engine, exhaust braking is automatically activated when Tow/Haul mode is selected. The system will command down shifts to reduce vehicle speed when the brake is applied. The normal tow/haul shift pattern will return once the vehicle is on a low grade or when the accelerator pedal is pressed.

Trailer Brake Driver Information Center Indicators and Messages

Trailer Brake Detection
The K67 Trailer Brake Control Module constantly monitors the trailer auxiliary control circuit from Terminal C at the X88 Trailer connector. When a trailer is connected with trailer brakes, the K67 Trailer Brake Control Module senses the connection and alerts the driver with a Trailer Connected message. If the K67 Trailer Brake Control Module senses a fault, or the trailer becomes disconnected, the vehicle will alert the driver with a Check Trailer Wiring message.

The following indicators are used to inform the driver of several different conditions:

Trailer Connected
This message will be briefly displayed when a trailer with Electric or Electric Over Hydraulic brakes is first connected to the vehicle. This message will automatically turn off in about ten seconds. The driver can also acknowledge this message before it automatically turns off.

Check Trailer Wiring
This message will be displayed if:

- The system detects that a trailer with Electric or Electric Over Hydraulic brakes is connected to the vehicle and then the trailer harness becomes disconnected from the vehicle.
- The trailer connection is recognized initially and then a disconnect occurs while the vehicle is stationary. This message will automatically turn off in about thirty seconds. This message will also turn off if the driver selects to turn this message off or if the trailer harness is reconnected.
- A disconnect of the trailer wiring harness occurs while the vehicle is moving. The Check Trailer Wiring message will continue until the ignition is turned off. The message will also turn off if the driver selects to turn this message off or it the trailer harness is re-connected.
- There is an electrical fault in the wiring to the electric trailer brakes. The Check Trailer Wiring message will continue as long as there is an electrical fault in the trailer wiring. This message will also turn off if the driver acknowledges this message off.
- A poor connection at the 7–way connector may cause the Check Trailer Wiring message. Some aftermarket 7–way trailer side connector adapters or plugs may cause deformation or excessive wear to the vehicle’s trailer terminals. It is recommended that you use an OEM or Pollak heavy duty 7–way trailer side connector adapter.

Service Trailer Brake System
This message will be displayed when there is a problem with the trailer brake control system. The trailer brake system may not be fully functional, or may not be functioning at all. The trailer brake system is designed to provide trailer braking, if possible, even when faults prevent it from being fully functional. This reduced functionality includes:

1. Providing trailer braking when the master cylinder pressure or brake pedal switch are faulted.
2. Providing trailer braking when hill start assist and trailer sway control communication is faulted.
3. Providing trailer braking when certain manual trailer brake apply lever faults are present.

Trailer Tire Pressure Monitoring

Special Tools

- *EL-46079/J-46079*
  Tire Pressure Monitor Diagnostic Tool
- *EL-50448*
  Tire Pressure Monitor Sensor Activation Tool
- *EL-52641* Trailer Presence Simulator Tool

For equivalent regional tools, refer to [Link target (target-id 59410-) not found] .

The Trailer Tire Pressure Monitor System is designed to monitor the pressure of the trailer tires, and warn the driver when a low pressure condition exists. Four Trailer Tire Pressure Monitor System sensors may be provided in the vehicle's glove box as an accessory when equipped. The system can accommodate a trailer with up to (6) tires if additional sensors are purchased from the dealership. Also, the system can be paired with up to (5) individual trailers. The sensors must be mounted onto each tire and wheel assembly, and the sensors must be learned by the vehicle by following the learning procedure as shown in the Trailering App section of this manual. For sensor installation assistance, please contact your trailer service center or tire service center. The Trailer Tire Pressure Monitor System sensors monitor the air pressure in the trailer tires and transmit the trailer tire pressure readings to a receiver located in the vehicle. The trailer tire pressure sensors can transmit up to 23 feet (7 meters) from the hitch receiver of the vehicle. The tire pressure values can be viewed in the trailering app in the vehicle's center stack.

Trailering Diagnostic Tools

In some situations when diagnosing trailer tire pressure monitoring, trailer lighting, or integrated trailer brakes, it may be necessary to connect the vehicle to a trailer to confirm proper operation. Performing this activity may prove difficult in the service environment since trailers are not often available for diagnostic use, may have existing electrical issues outside of the issues a technician is attempting to diagnose, or simply may be too unwieldily to connect for diagnosis.

With all this in mind, it may be helpful to build or create a tool that can be plugged into the vehicle's trailer connector and simulate a connected trailer. This tool would include park lamps, stop lamps, and a reverse lamp for lighting and trailer tire pressure monitoring diagnosis. It can be expanded to include trailer brake magnets to diagnose integrated trailer brake concerns. Also, an additional lamp can be included to diagnose the B+ circuit to the trailer.

Trailer issues are NOT covered under warranty, but these tools may be used to verify the vehicle is functioning properly and to help the customer understand and correct any trailer related issues if they so choose.

Available Trailer Presence Simulator Tool

Illustration	Tool Number/Description
5166189	*EL-52641* Trailer Presence Simulator Tool

Simulated Trailer Lighting

Creating a tool to simulate a connected trailer can be used to diagnose issues with trailer lighting, trailer brake (if equipped), the Trailering App (if equipped), and trailer tire pressure monitoring system (if equipped).

If the vehicle is equipped with a K68 Trailer Lamp Control Module (U1D/UET), the module monitors the current on the lighting circuits to determine a trailer has been connected. The Trailer Lamp Control Module pulses current on the trailer lighting circuits every 42 minutes to monitor for a connected trailer. If a current draw greater than 55mA is detected, the Trailer Lamp Control Module recognizes this as a connected trailer. This will enable any trailer lighting controlled by the Trailer Lamp Control Module. The Center Stack Module will also use this trailer detection as a cue to enable the Trailering App and trailer tire pressure monitoring functions.

Creating a Simulated Trailer Lighting Tool
Parts needed:

- 7-way RV trailer connector Qty: 1

Note: The combination trailer stop/turn, and backup lamps must draw at least 55mA of total current to be detected as a trailer. Some LED combination lamps will not draw enough current. If an LED combination lamp is used, make sure it draws at least 55mA. A load resistor can be added to the circuit if necessary to obtain the correct load.

- Combination trailer park/stop/turn lamp (greater than 55mA drawn when on) Qty: 2
- Reverse lamp Qty: 1

- 12 gauge wire and terminals/connectors Qty: As needed
- 18 gauge wire and terminals/connectors Qty: As needed
- Mounting board Qty: 1

1. Connect a 12 gauge wire to the ground terminal of the 7-way trailer connector and the ground circuit of each combination trailer park/stop/turn lamp and the reverse lamp in parallel.
2. Connect an 18 gauge wire between the park lamp terminal of the 7-way trailer connector and the park lamp circuit of each combination trailer park/stop/turn lamp in parallel.
3. Connect an 18 gauge wire between the left turn/stop lamp terminal of the 7-way trailer connector and the turn/stop lamp circuit of left trailer park/stop/turn lamp.
4. Connect an 18 gauge wire between the right turn/stop lamp terminal of the 7-way trailer connector and the turn/stop lamp circuit of right trailer park/stop/turn lamp.
5. Connect an 18 gauge wire between the reverse lamp terminal of the 7-way trailer connector and the reverse lamp.

Note: A combination trailer lighting and trailer brake tool can be created on the same mounting board.

6. Mount the left combination trailer park/stop/turn lamp, right combination trailer park/stop/turn lamp, and reverse lamp to the mounting board.
7. Plug the 7-way RV trailer connector to the vehicle and verify functionality.

Simulated Trailer Brakes

Creating a tool to simulate trailer brakes can be used to diagnose trailer brake issues.

The trailer brake control system is compatible with two types of trailer brake systems: electromagnetic or electro-over hydraulic trailer brakes. The Brake System Control Module must determine which type of brakes the trailer is equipped with so the system can output correctly for the trailer's brake system. Because the Brake System Control Module has to determine the type of trailer brake system that is being used, it can be sensitive to a variety of trailer wiring issues.

The Trailer Brake Control Module continuously sends a test pulse out on the trailer brake control circuit (circuit 47) to determine if a trailer with trailer brakes has been connected. How the pulse reacts when a trailer is connected is how the Trailer Brake Control Module determines which type of braking system the trailer is equipped with.

Even after the system detects the trailer, Trailer Brake Control Module will continue to send this test pulse on the trailer brake control circuit, which now is monitoring both the truck and trailer circuitry. The trailer brake control circuit continues to be monitored for any faults so the driver can be notified of any issues that may occur within the truck or trailer, as well as, to determine when the trailer is disconnected from the truck.

Creating a Simulated Trailer Brake Tool
Parts needed:

- 7-way RV trailer connector Qty: 1
- Electric trailer brake magnets Qty: 2, 4, 6, or 8
- Reverse lamp Qty: 1
- Mounting board Qty: 1
- 12 gauge wire and terminals/connectors Qty: As needed

1. Connect a 12 gauge wire to the ground terminal of the 7-way trailer connector.
2. Connect a 12 gauge wire to the brake controller output terminal of the 7-way trailer connector.

Note: The trailer brake magnets must be connected in parallel. Connecting in series will create an excessive current draw and disable the trailer brake system.

3. Connect the trailer brake magnets to the 12 gauge wires from the 7-way trailer connector in parallel.

Note: A combination trailer lighting and trailer brake tool can be created on the same mounting board.

4. Mount the trailer brake magnets to the mounting board.
5. Plug the 7-way RV trailer connector to the vehicle and verify functionality.

Vehicle Access

Schematic and Routing Diagrams

Door Lock/Indicator Schematics (Door Lock Switches and Indicators (A45 / AUN))

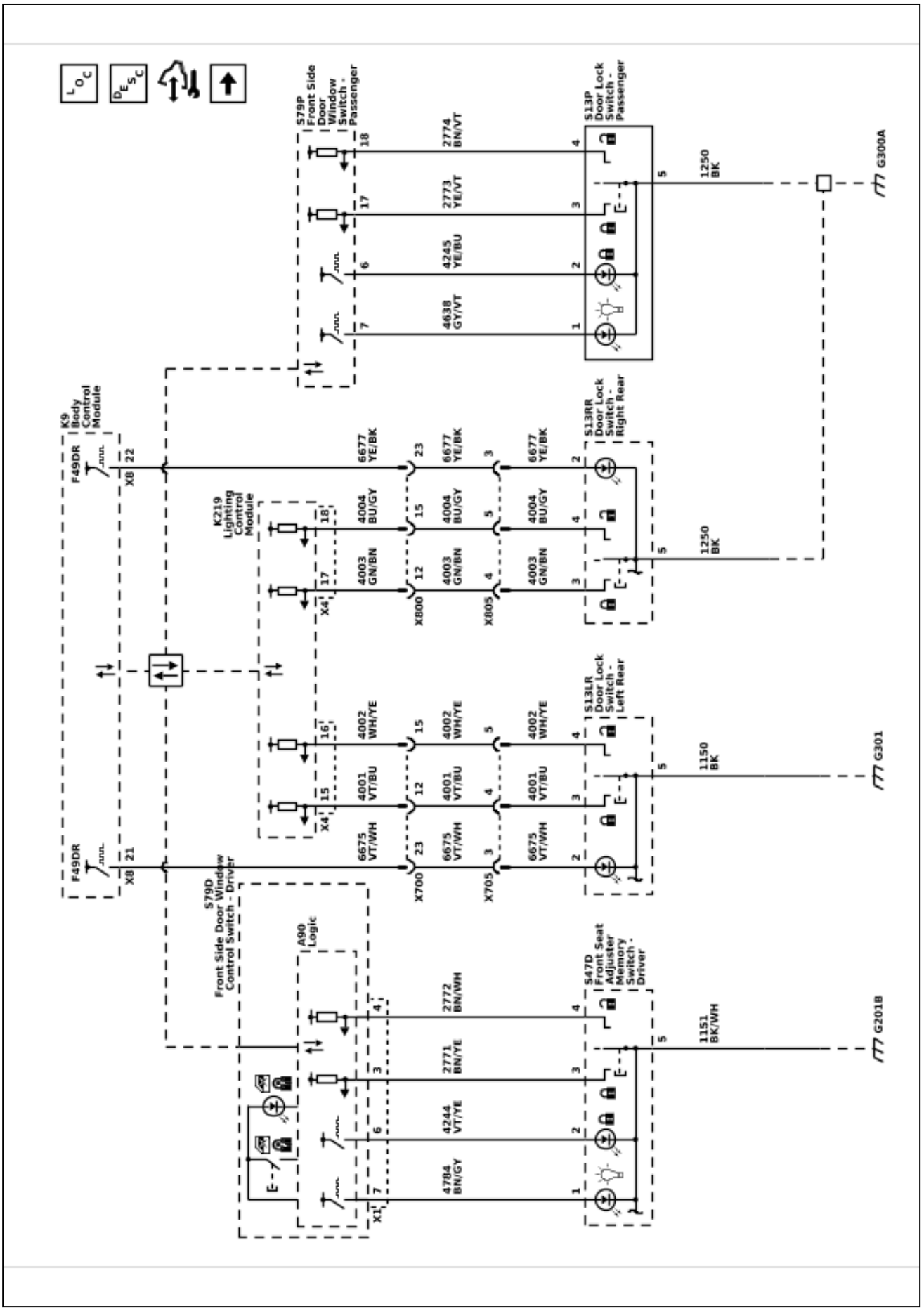

Door Lock/Indicator Schematics (Door Lock Switches and Indicators (- (A45 & AUN)))

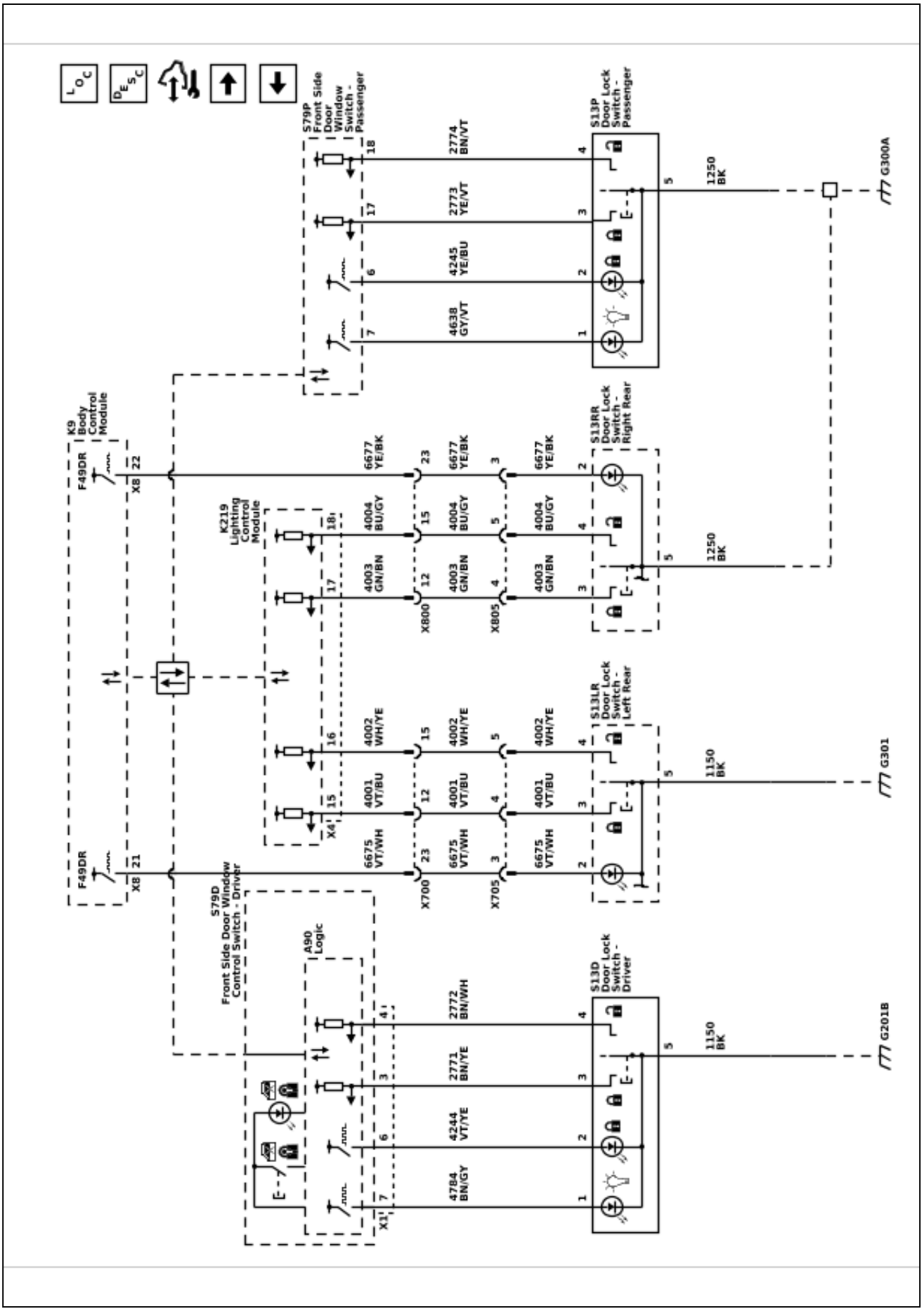

Door Lock/Indicator Schematics (Ajar Switches and Lock Indicators)

6613310

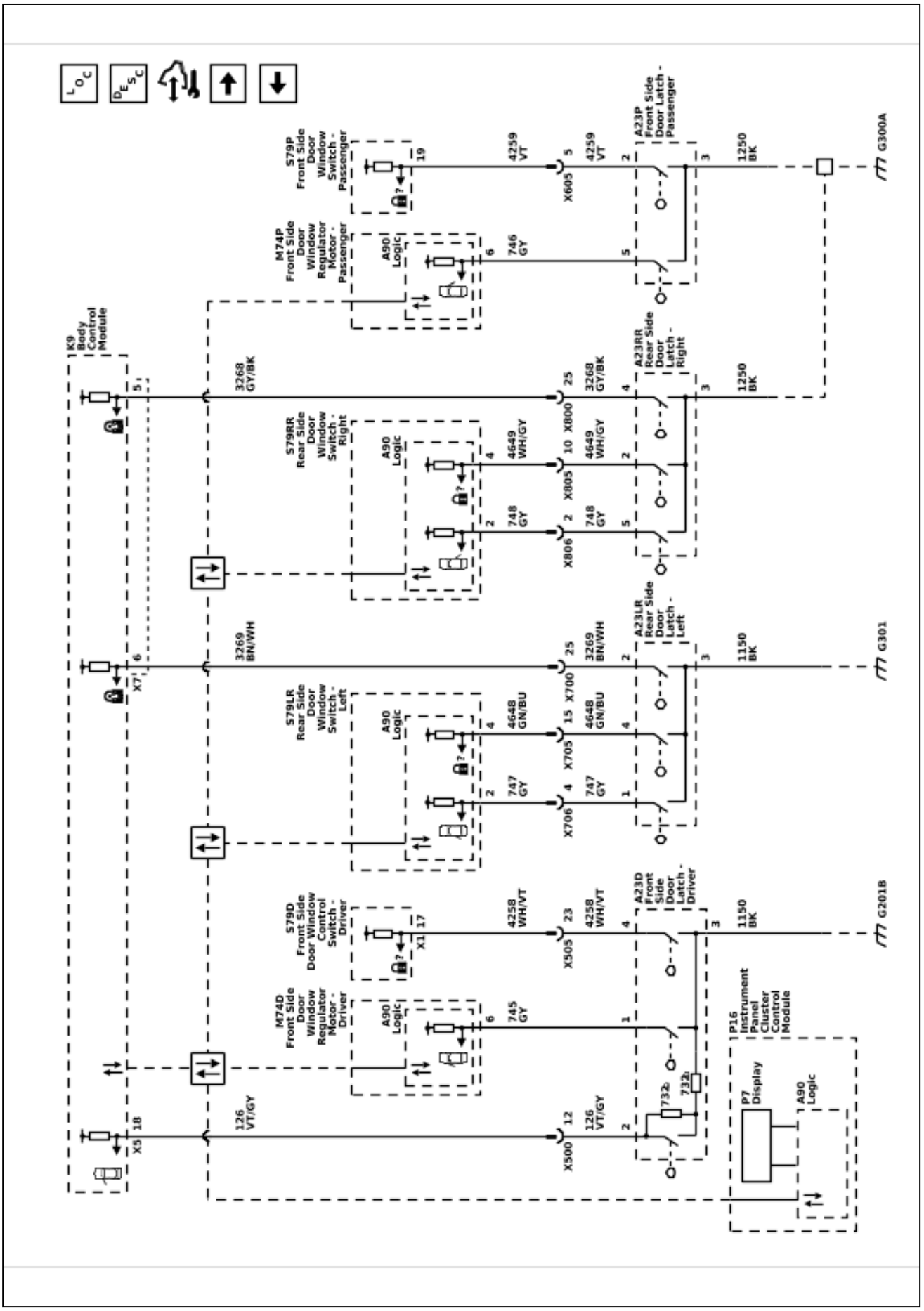

Door Lock/Indicator Schematics (Actuators)

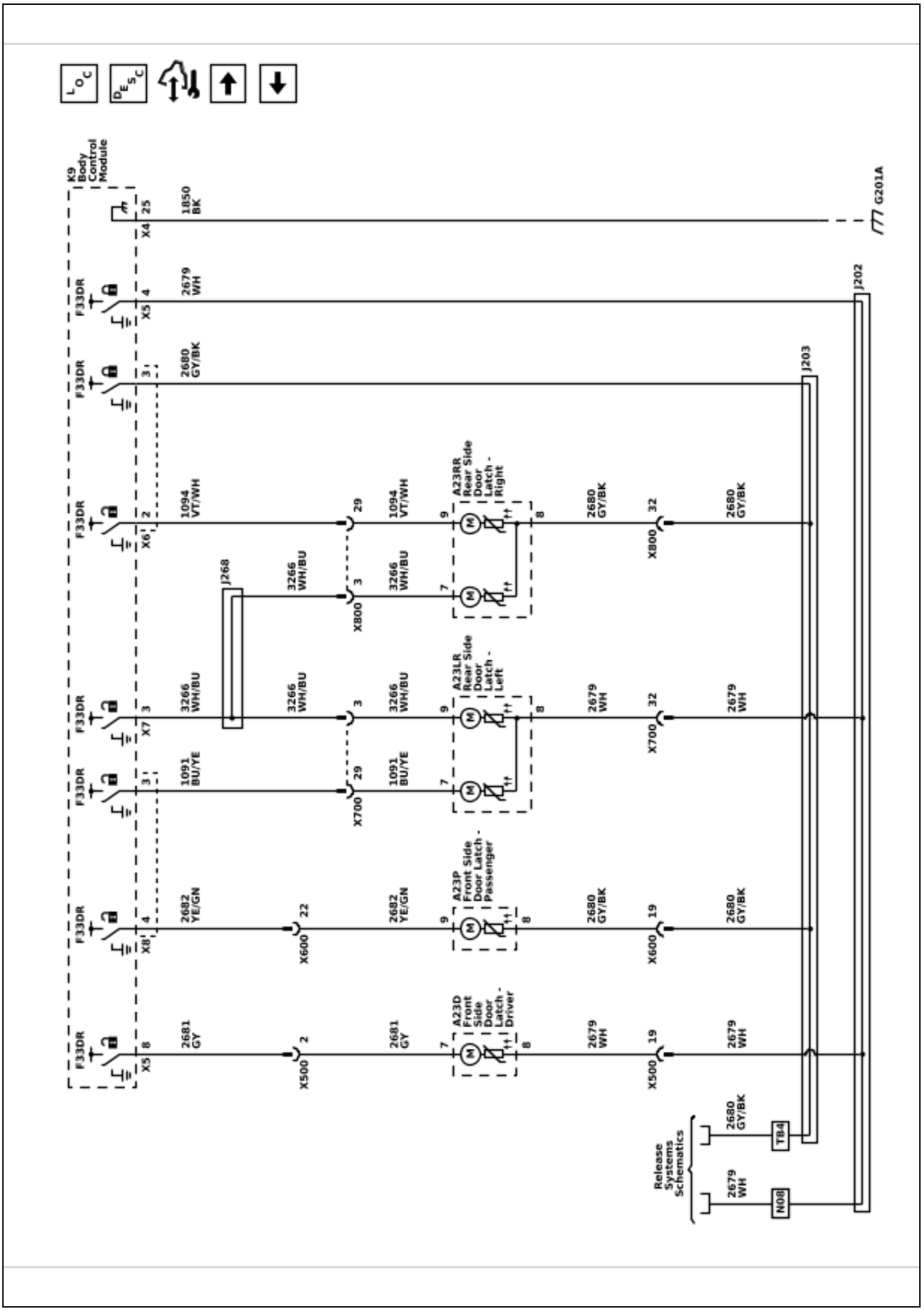

6613312

Door Lock/Indicator Schematics (Door Handle Switches)

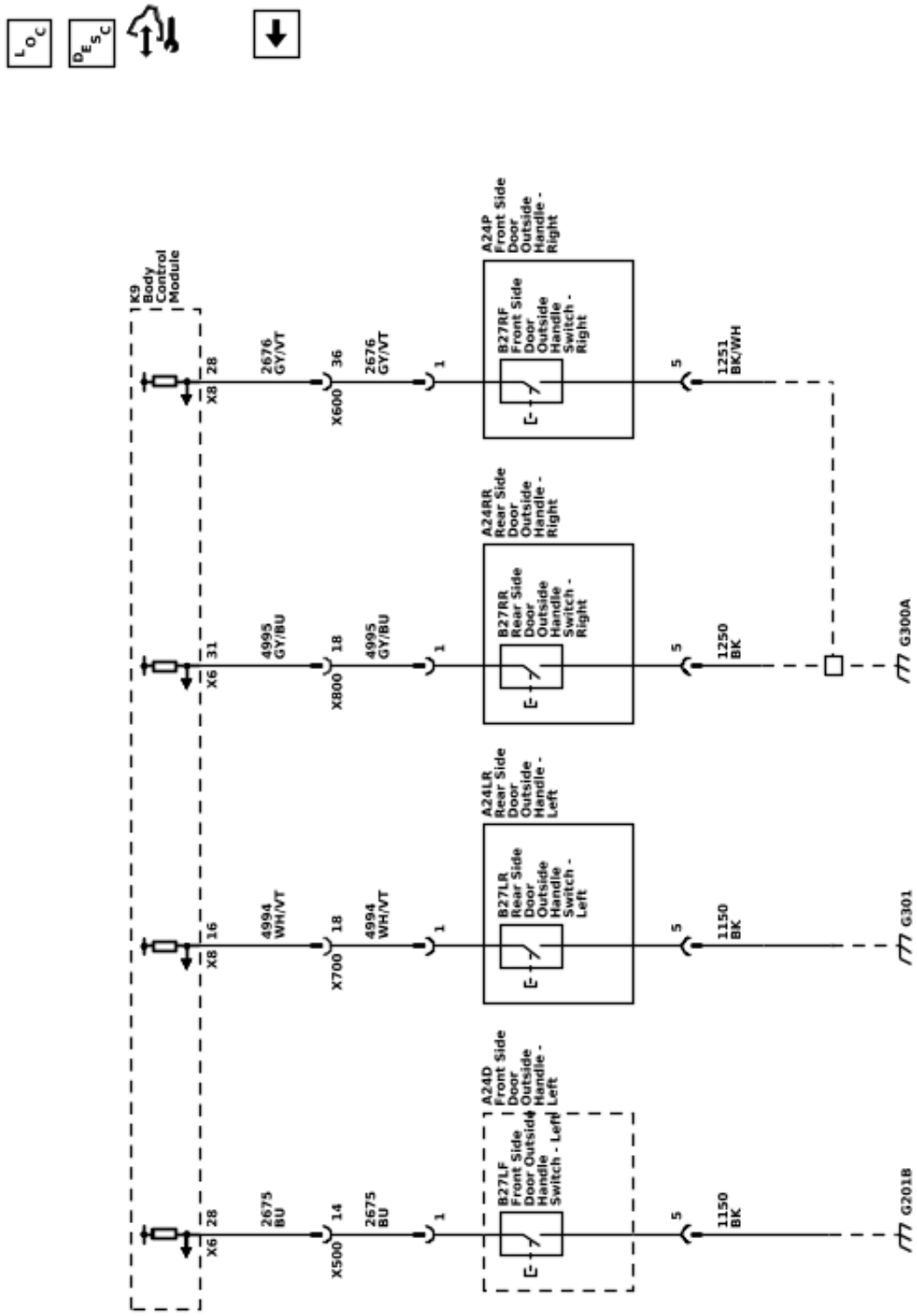

Release Systems Schematics (Liftglass Release)

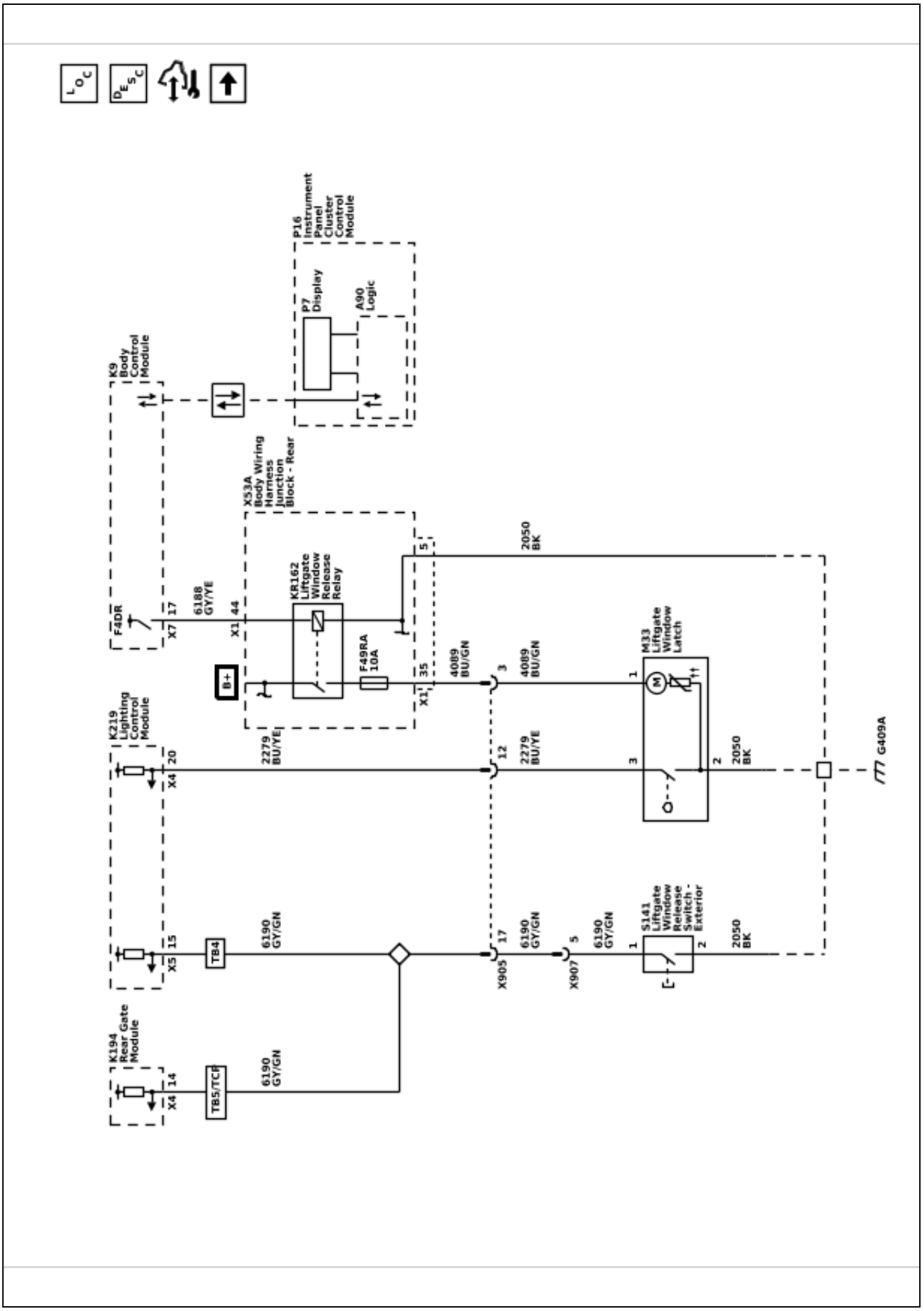

6613314

Release Systems Schematics (Liftgate Release (TB4))

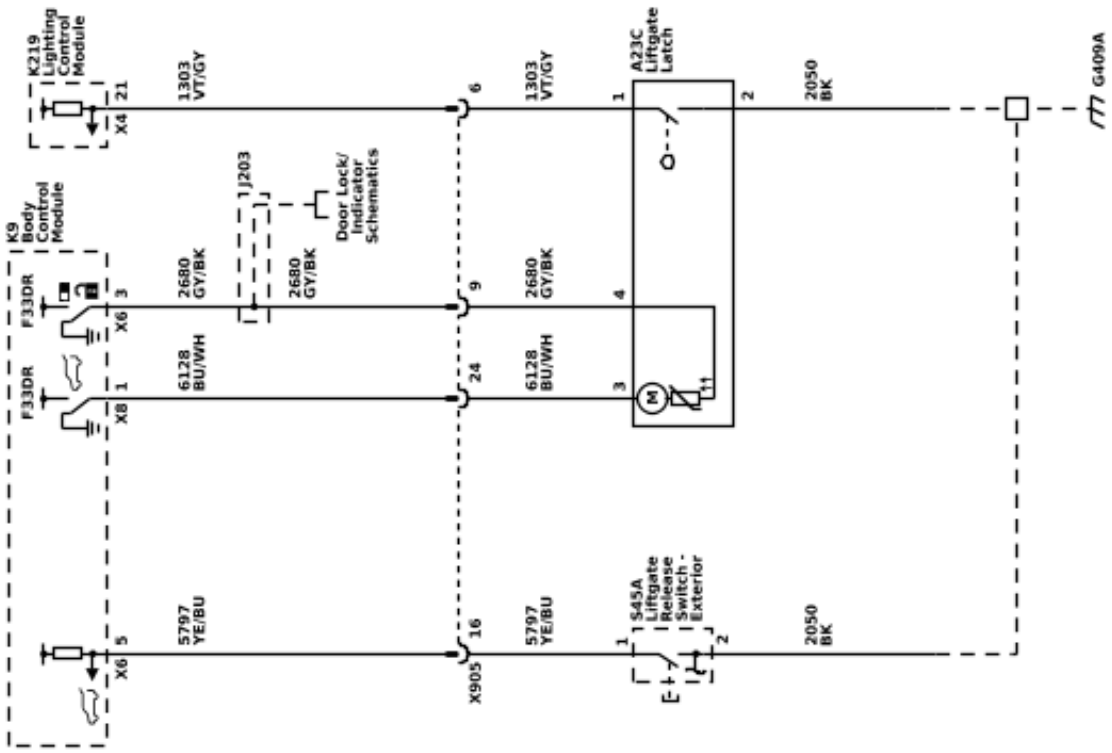

6613315

Release Systems Schematics (Fuel Tank Filler Door Lock Actuator (N08))

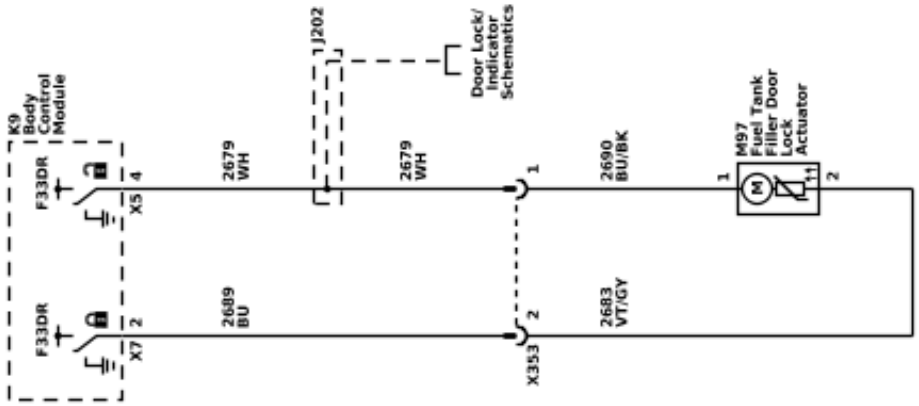

6613316

Hood Latch Schematics (Engine Compartment Cover Switch)

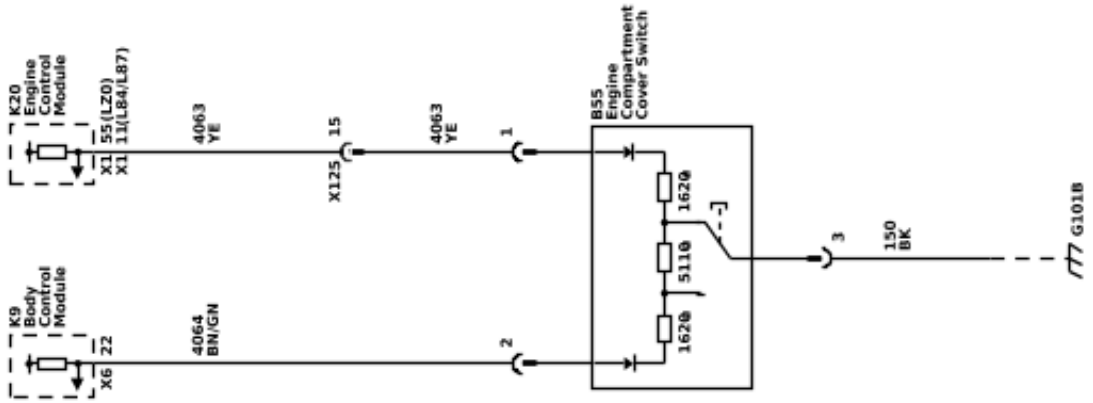

Liftgate Schematics (Rear Gate Module Power, Ground, Serial Data, and Liftgate Motor (TB5 / TCP))

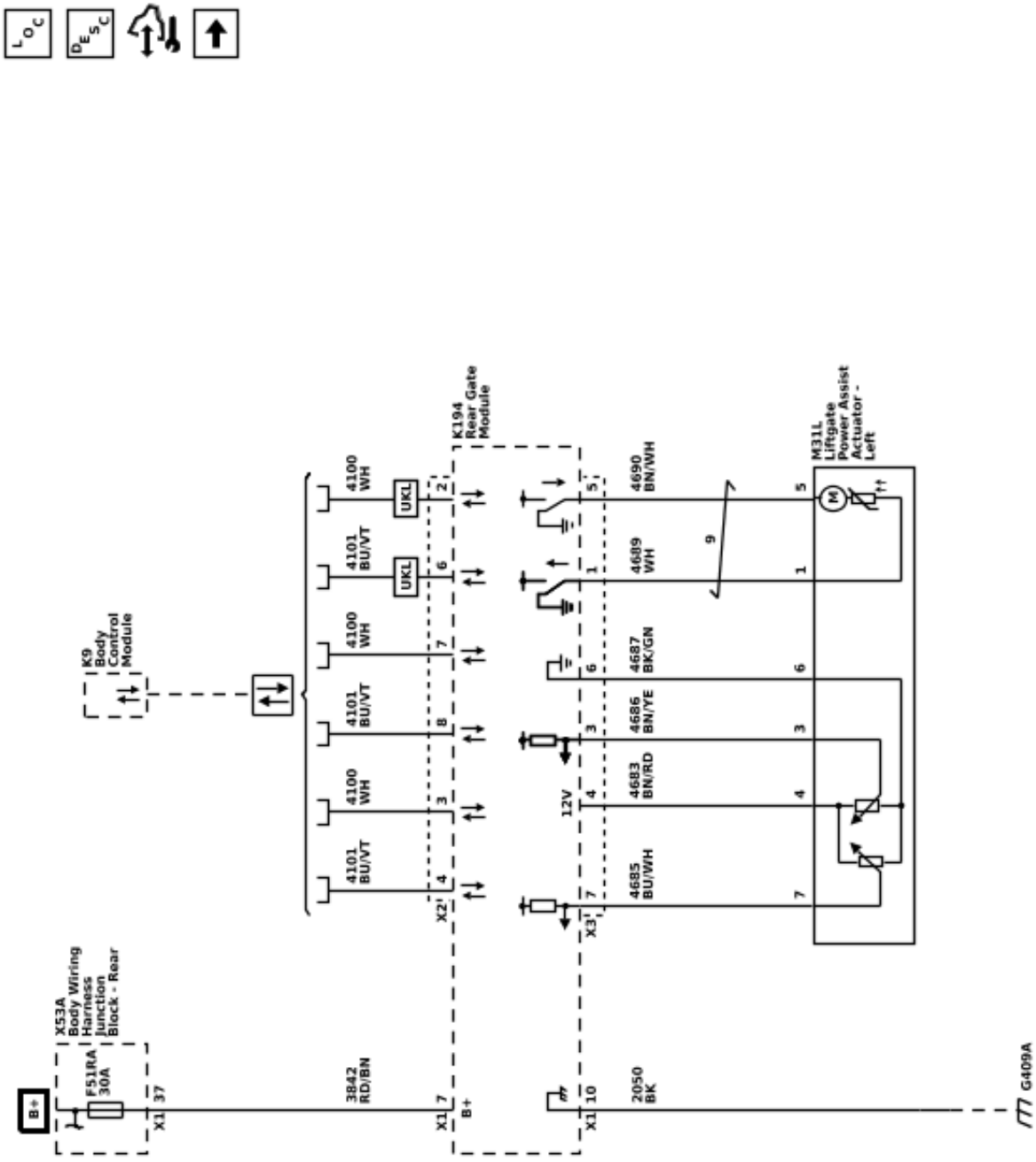

6613317

Liftgate Schematics (Liftgate Latch, Controls, and Object Sensors (TB5 / TCP))

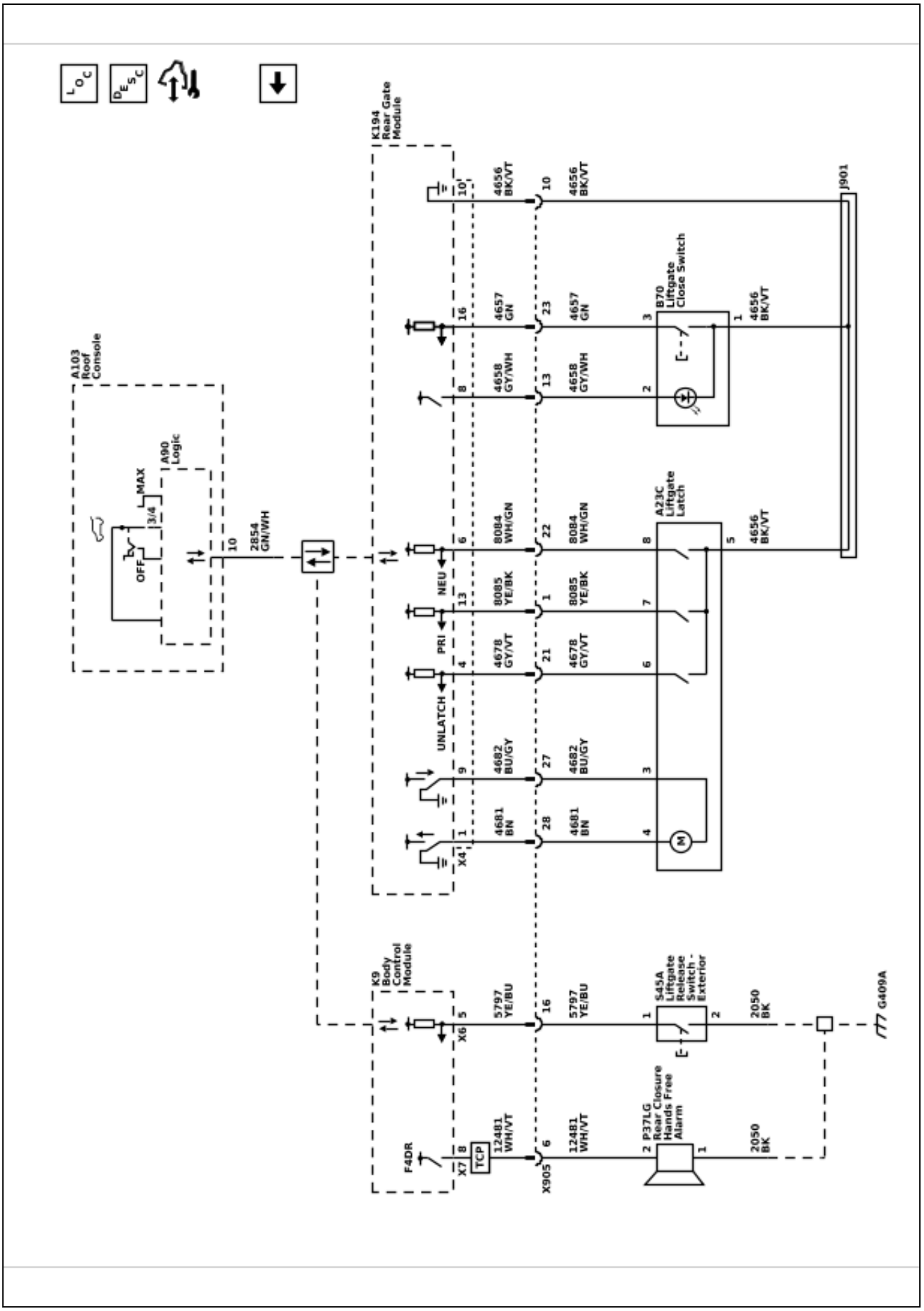

Description and Operation

Door Ajar Indicator Description and Operation

Door Ajar Indicator System Components

The door ajar indicator system consists of the following components:

- Body control module (BCM)
- Instrument cluster
- Driver door latch
- Passenger door latch
- Left rear door latch
- Right rear door latch
- Driver window motor
- Passenger window motor
- Left rear side door window switch
- Right rear side door window switch

Driver and Passenger Door Ajar

The window motor supplies a 12V signal to the door ajar switch within the door latch, when a door is open the door ajar switch closes pulling the 12V signal low. When the window motor detects the drop in the 12V signal circuit, it will then communicate this status to the BCM via local interconnect network (LIN) bus. The BCM communicates with the instrument cluster via serial data message. The instrument cluster, upon receipt of this serial data message, will illuminate the door ajar indicator and also send a serial data message to the radio to activate the door ajar audible warning when the vehicle speed is greater then 8 km/h (5 mph).

Rear Doors Ajar

The rear side door window switches each provide a 12V signal to their respective door ajar switch signal circuits. The rear door ajar switches are integral to each rear door latch assembly. When a rear door is opened, the normally open door ajar switch closes. With the door ajar switch closed, ground is provided to the door ajar switch signal circuit and the voltage within the signal circuit drops. The rear side door window switches will detect the voltage drop and will send a serial data message to the body control module which will then send a message to the instrument cluster to command the door ajar message

Fuel Fill Door Description and Operation

Fuel Door Release System Components

- Body control module (BCM)
- Fuel door release actuator

The locking and unlocking of the fuel door is a function of the power door lock system.

The body control module powers the reversible door latch actuators by providing battery positive voltage and ground to the appropriate lock and unlock control circuits of the door latches. Transitioning of the lock actuators to the lock or unlocked position depends upon which control circuits receive voltage and which control circuits receive ground. When the interior door lock switch is pressed, the body control module disables the functions of exterior door handle unlock switches preventing the unlatching of the vehicle doors until an the interior door unlock switch has been pressed or the appropriate button has been pressed on the keyless entry transmitter.

The body control module provides the driver and left rear door latches and fuel filler door lock actuator (If equipped with RPO N08) with the Unlatch Low Reference Circuit 1.

Each door latch, the fuel filler door lock actuator (If equipped with RPO N08), and the liftgate latch (If equipped with RPO TB4) is provided an Unlatch Control Circuit by the body control module.

When the drivers door is commanded to unlock the body control module will pull the Unlatch Low Reference Circuit 1 low and will pull the driver door and fuel filler lock actuator Unlatch/Unlock Control Circuits will be pulled high causing the driver door latch and fuel filler lock actuator to transition to the unlocked/ unlatched state.

Hood Ajar Indicator Description and Operation

Hood Ajar Switch

The body control module (BCM) applies approximately 5V to the hood ajar signal circuit and monitors the voltage to determine the position of the hood. The hood ajar switch contains a multiplexed resistor. When the hood is open, the switch is open and voltage remains high. When the hood is closed, the switch is closed and the voltage is pulled low.

The BCM uses the hood ajar switch as a content theft deterrent alarm trigger.

Hood Ajar Indicator/Message

When the hood is ajar, a message is displayed on the DIC or the hood ajar indicator will be illuminated.

Liftgate Ajar Indicator Description and Operation

Rear Access Open

The lighting control module will monitor the voltage on the liftglate ajar switch signal circuit, when the ajar switch is open, the voltage level within the signal circuit will be greater than 7 volts indicating the liftgate is in the closed position. When the liftgate is open or ajar, the ajar switch will close providing a ground path for the signal circuit, the lighting control module will detect the drop in voltage and will send a serial data message to the driver information center to display the Rear Access Open message.

Rear Liftglass Open

The lighting control module will monitor the voltage on the liftglass ajar signal circuit, when the ajar switch is open, the voltage level within the signal circuit will be greater than 7 volts indicating the liftgate window is in the closed position. When the liftgate window is open or ajar, the ajar switch will close providing a ground path for the signal circuit, the lighting control module will detect the drop in voltage and will send a serial data message to the driver information center to display the Rear Liftglass Open message.

Liftgate Ajar Indicator Description and Operation

Rear Access Open

The Rear Gate Module provides 12V to the Liftgate Latch unlatch and primary signal circuits. Ground is applied at all times to the Liftgate Latch. When the liftgate is open the unlatch switch will close providing ground to the unlatch signal circuit. The Rear Gate Module will detect the voltage drop on the signal circuit and send a serial data message to the driver information center indicating the liftgate ajar status, upon receipt of this message the driver information center will display the Rear Access Open message.

Rear Liftglass Open

The lighting control module will monitor the voltage on the liftglass ajar signal circuit, when the ajar switch is open, the voltage level within the signal circuit will be greater than 7 volts indicating the liftgate window is in the closed position. When the liftgate window is open or ajar, the ajar switch will close providing a ground path for the signal circuit, the lighting control module will detect the drop in voltage and will send a serial data message to the driver information center to display the Rear Liftglass Open message.

Liftgate Description and Operation

Liftgate/Liftgate Window Release Components

The liftgate release system consists of the following components:

- Body control module
- Lighting control module
- Liftgate latch assembly
- Exterior liftgate release switch
- Exterior liftgate window release switch
- Liftgate window latch
- Liftgate window release relay

Liftgate Latch Assembly

Note: The function of the liftgate latch and the liftgate window latch will be disabled if the rear wiper motor has been activated and wiping the liftgate window or is not in the PARK position.

When the passenger door, right rear door and liftgate have been commanded to lock with a door lock switch or a keyless entry transmitter, the exterior liftgate release switch will become inoperative the same way the passenger door handles will become inoperative to prevent unauthorized access. Also the passenger and right rear doors must be commanded to unlock to enable the exterior liftgate release switch. When the exterior liftgate release switch is pressed, the body control module will provide B+ voltage to the liftgate latch unlatch control circuit and ground to the unlock control 2 circuit causing the liftgate latch assembly to perform the unlatch function releasing the liftgate and allowing the liftgate to be pulled open.

Liftgate Window Latch Assembly

Exterior Liftgate Window Release Switch

The lighting control module supplies and monitors a 12V signal to the liftgate window unlatch switch so that when the switch is pressed, the voltage within the signal circuit is pulled low and in response, the lighting control module will detect the voltage drop and send a serial data message to the body control module to command the liftgate window to release.

Liftgate Window Latch

When body control module receives a liftgate window release command from the liftgate window unlatch switch, the body control module applies voltage to the liftgate window unlatch relay control circuit, which energizes the coil side of the relay. The switch side of the liftgate window unlatch relay then momentarily closes, supplying a brief pulse of battery positive voltage to the liftgate window latch. The liftgate window latch is continuously grounded and when it receives the voltage pulse, it will become energized

and the latch will activate releasing the liftgate window so that it may be manually raised to an open position.

Liftgate Description and Operation

System Description

The power liftgate system consists of the following components:

- Rear gate module
- Body control module
- Lighting Control Module
- Liftgate position sensor (part of the power assist actuator)
- Interior liftgate rotary switch
- Exterior liftgate release switch
- Liftgate close switch
- Liftgate latch assembly
- Liftgate power assist actuator
- Exterior liftgate window release switch
- Liftgate window latch assembly
- Liftgate window release relay
- Keyless entry transmitter

Power Liftgate Operation

The power liftgate operations will be suspended if the rear wiper motor has been activated and wiping the liftgate window, the transmission selector is not in P (park) or if the vehicle speed is above 3KPH

The tail lamps will then flash 3X to indicate that the body control module has received a request to power open or power close

The power liftgate can be commanded to power open and power close by the following methods:

- An open or close command from the interior liftgate rotary switch
- An open command from the exterior liftgate release switch
- A close command from the liftgate close switch
- An open or close request by pressing the appropriate button 2x quickly on the keyless entry transmitter (¾ or the MAX modes only)

The rear gate module will respond to a request by commanding the liftgate latch to release the liftgate and activate the liftgate motor in the liftgate power assist actuator and raise the liftgate to the open position or to lower and cinch the liftgate closed.

Power Liftgate System

The rear gate module continuously monitors power liftgate operation and calculates its location and direction of travel from an liftgate position sensor (part of the power assist actuator). One input returns the position of the liftgate relative to the x-axis and y-axis. The rear gate module then uses these 2 inputs together to calculate its angle relative to the liftgate. The interior liftgate rotary switch contains resistors which will incrementally drop the voltage level in the signal circuit as the switch rotated from the OFF position to the ¾ position or the MAX position, the front overhead console assembly will detect the change in voltage and will send a serial data message to the rear gate module which will monitor the x-axis and y-axis as the liftgate is in motion to stop the liftgate parallel to the vehicle roof if the rotary switch is in the ¾ setting or to open fully if the rotary switch is in the MAX setting.

The liftgate latch is a bi-directional motor and latch or unlatch operation is the result of the direction of the motor rotation. The rear gate module controls the liftgate latch through the control circuits by supplying power and ground in the appropriate polarity. The motor control circuits are monitored by the rear gate module prior to activation for a high or low condition and during motor operation for an insufficient current flow condition. The unlatch, primary, and neutral switches are part of the liftgate latch and are used by the rear gate module to determine the state of the latch during the process of latching or unlatching and will send the status of the latches to the body control module which is used to determine if the liftgate is closed or ajar. Each of the latch switch signal circuits are supplied battery voltage and monitored within the rear gate module. The latch switches share a common low reference circuit from the rear gate module and when the switch contacts close the signal circuit goes low and the rear gate module determines the switch to be active.

The exterior liftgate release switch circuit is supplied battery voltage by the body control module, when the switch is pressed the contacts close and the signal circuit goes low, the body control module will detect the voltage drop and will send a serial data message to the rear gate module requesting the rear gate open request (vehicle unlocked).

The liftgate close switch signal circuit is supplied battery voltage by the rear gate module. The switch shares a common low reference circuit from the rear gate module and when the switch is pressed the contacts close and the signal circuit goes low, the rear gate module will detect the voltage drop and will send a serial data message to the body control module requesting the rear gate close request.

For vehicles without the optional passive keyless entry, when the exterior liftgate release switch is pressed, the body control module will check the status of the vehicle door locks. If the vehicle doors are locked, the body control module will ignore the signal from the liftgate handle switch. If the vehicle doors are unlocked, the body control module will permit the liftgate to unlatch and power open when the exterior liftgate release switch is pressed.

For vehicles with the optional passive keyless entry system, the body control module monitors the proximity of the keyless entry transmitter. If the exterior liftgate release switch is pressed and the keyless entry transmitter is within range, the body control module will send a serial data message to the rear gate module and will permit the liftgate to unlatch and power open. If the doors are locked and the keyless entry transmitter is not within range, the body control module will ignore the signal from the exterior liftgate release switch and the liftgate will not power open.

Power Liftgate Object Detection

The rear gate module continuously monitors power liftgate operation and calculates its location and direction of travel from an liftgate position sensor (part of the power assist actuator). One input returns the position of the liftgate relative to the x-axis and y-axis. The rear gate module then uses these 2 inputs together to calculate its position and motion, if the rear gate module detects a current spike and motion reduction in the liftgate position sensor during the power close operation, it will command the liftgate to reverse direction.

Power Liftgate Hands Free System Operation (TCP)

Hands Free System Operation

If equipped, the liftgate may be opened with a remote key by entering the authentication zone from outside the approach zone. Both zones are located near the rear of the vehicle.

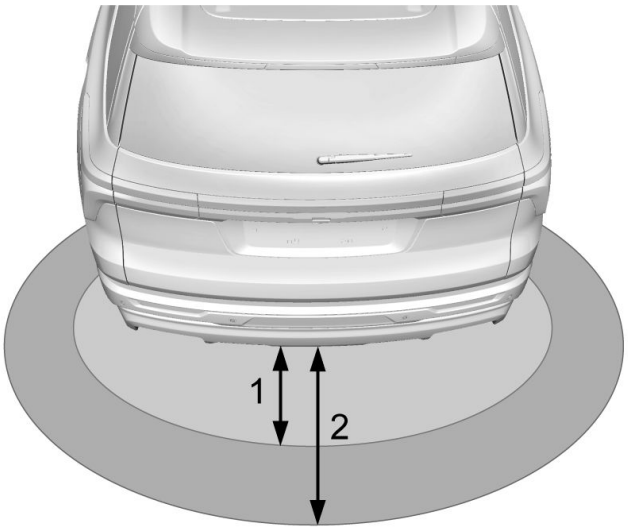

6373234

1. Authentication Zone
2. Approach Zone

To cancel the feature after entering the authentication zone, the user may perform a single press of the button, press the exterior liftgate switch, or step out of the authentication zone. The hands-free feature will not operate while the liftgate is moving. To stop the liftgate while in motion, use any of the liftgate switches.

The hands-free feature can be customized. To view available settings for this feature, from the infotainment screen, select Settings > Vehicle > Comfort and Convenience > Hands-Free Storage Access. Choose from the following:

This feature can be turned on and off using the exterior liftgate switch while the remote key is in the authentication zone. To do this, press and hold the switch for several seconds. Upon successfully enabling or disabling the feature using this method, the vehicle taillights will flash.

Rear Closure Hands Free Alarm Operation

When the Body Control Module detects that the Liftgate Hands Free function is requested, it will command the Rear Closure Hands Free Alarm to activate by sending a control signal through the hands free alarm control circuit. When the Rear Closure Hands Free Alarm receives the control signal from the Body Control Module, the Rear Closure Hands Free Alarm will activate and emit an audible tone to alert any nearby person(s) that the Power Liftgate is Operating.

Manual Liftgate Operation

Note: The interior liftgate rotary switch must be in the ¾ position or the MAX position for the remote keyless entry transmitter (key fob) to command the liftgate, The OFF setting will disable the liftgate release of the remote keyless entry transmitter (key fob)

The operator has the option to disable the power liftgate operations by selecting the “OFF” position on the interior liftgate rotary switch. The releasing and cinching for the liftgate latch will function normally, however, the operator must use the exterior liftgate handle switch to activate the liftgate latch and manually pull the liftgate open and push the liftgate closed. All power liftgate operations will be suspended for as long as the liftgate rotary switch is in the “OFF” position.

Liftgate Window Latch Assembly

Exterior Liftgate Window Release Switch

The rear gate module supplies and monitors a 12V signal to the liftgate window unlatch switch so that when the switch is pressed, the voltage within the signal circuit is pulled low and in response, the rear gate module will detect the voltage drop and send a serial data message to the body control module to command the liftgate window to release.

Liftgate Window Latch

When body control module receives a liftgate window release command from the liftgate window unlatch switch, the body control module applies voltage to the liftgate window unlatch relay control circuit, which energizes the coil side of the relay. The switch side of the liftgate window unlatch relay then momentarily closes, supplying a brief pulse of battery positive voltage to the liftgate window latch. The liftgate window latch is continuously grounded and when it receives the voltage pulse, it will become energized and the latch will activate releasing the liftgate window so that it may be manually raised to an open position.

Power Door Locks Description and Operation

Door Lock System Components

The power door lock system consists of the following components:

- Driver door lock switch
- Passenger door lock switch
- Left rear door lock switch
- Right rear door lock switch
- Driver front side door window control switch
- Passenger front side door window switch
- Driver front side door latch
- Passenger front side door latch
- Left rear side door latch
- Right rear side door latch
- Exterior door handle switches
- Body control module
- Lighting control module

Door Lock System Controls

The power door lock system can be controlled by any of the following:

- Power door lock switch activation
- Keyless entry lock or unlock command
- Delayed locking command
- Automatic door lock command
- When the OnStar® system is used to unlock the driver door

Door Lock and Unlock Operation

The driver or passenger front side door window control switch will monitor the voltage of their respective door lock switches, when the driver or passenger door lock switch is activated in the lock or unlock position the signal voltage will be pulled low, the corresponding front side door window control switch will detect the voltage drop in the signal circuit and will send a serial data message to the body control module requesting the door lock or unlock command.

The lighting control module will monitor the voltage of the left rear and right rear door lock switches, when the left rear or right rear door lock switch is activated in the lock or unlock position the signal voltage will be pulled low, the lighting control module will detect the voltage drop in the signal circuit and will send a serial data message to the body control module requesting the door lock or unlock command.

The body control module powers the reversible door latch actuators by providing battery positive voltage and ground to the appropriate lock and unlock control circuits of the door latches. Transitioning of the lock actuators to the lock or unlocked position depends upon which control circuits receive voltage and which control circuits receive ground. When the interior door lock switch is pressed, the body control module disables the functions of exterior door handle unlock switches preventing the unlatching of the vehicle doors until an the interior door unlock switch has been pressed or the appropriate button has been pressed on the keyless entry transmitter.

The body control module provides the driver and left rear door latches and fuel filler door lock actuator (If equipped with RPO N08) with the Unlatch Low Reference Circuit 1.

The body control module provides the passenger and right rear door latches and the liftgate latch (If equipped with RPO TB4) with the Unlatch Low Reference Circuit 2.

Each door latch, the fuel filler door lock actuator (If equipped with RPO N08), and the liftgate latch (If equipped with RPO TB4) is provided an Unlatch Control Circuit by the body control module.

When the drivers door is commanded to unlock the body control module will pull the Unlatch Low Reference Circuit 1 low and will pull the driver door and fuel filler lock actuator Unlatch/Unlock Control Circuits will be pulled high causing the driver door latch and fuel filler lock actuator to transition to the unlocked/ unlatched state.

When all doors have been commanded to unlock the body control module will pull the Unlatch Low Reference Circuit 1 and Unlatch Low Reference Circuit 2 low and each door latch and the fuel filler lock actuator Unlatch/Unlock Control Circuits will be pulled high causing the doors and fuel filler lock actuator to transition to the unlocked/unlatched state.

When the TB4 liftgate is commanded to open the body control module, if the vehicle doors are unlocked, will pull the Unlatch Low Reference Circuit 2 low and the Rear Closure Unlatch Actuator Unlatch Control Circuit will be pulled high causing the TB4 liftgate Latch to activate and release the liftgate.

When the lock actuators are inactive the circuits are disconnected from power and ground and the circuits will have a floating voltage.

Passive Door Lock/Unlock Operation

The exterior door handle switch signal circuits provide inputs to the body control module when the exterior door handle switches are activated. These inputs allow the body control module to detect a door lock or a door unlock request. The body control module provides a 7 V signal to each exterior door handle switch via the door handle switch signal circuits. When a door handle switch is pressed, the switch closes and the voltage signal within the signal circuit is pulled to ground. The body control module will detect the voltage drop and a low frequency antenna will transmit a challenge to the keyless entry transmitter. If the challenge is met, the keyless entry transmitter will respond, and the body control module will command the door(s) to be locked or unlocked

Wipers and Washers

Schematic and Routing Diagrams

6613319

Wiper/Washer Schematics (Controls)

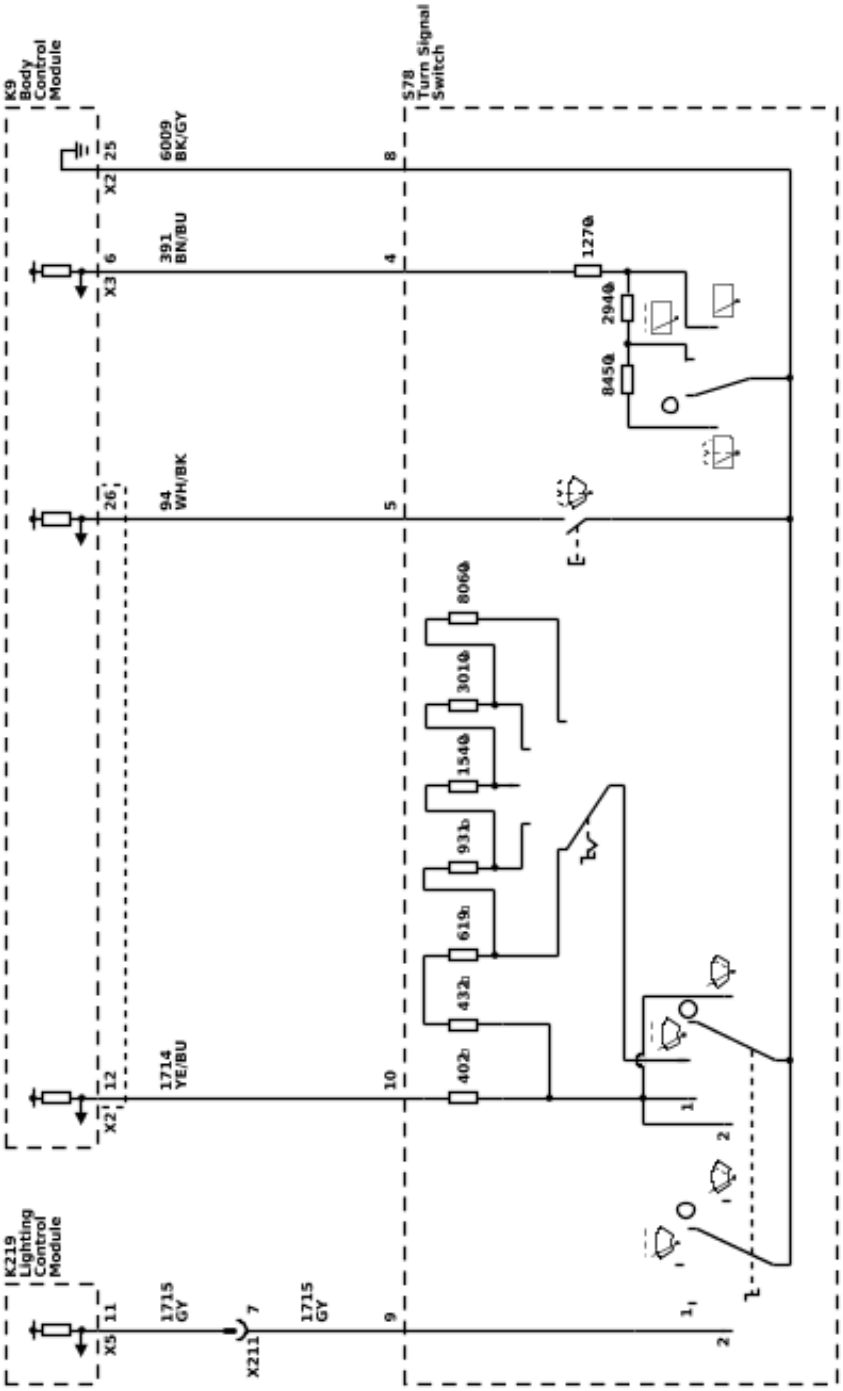

Wiper/Washer Schematics (Wiper Motors)

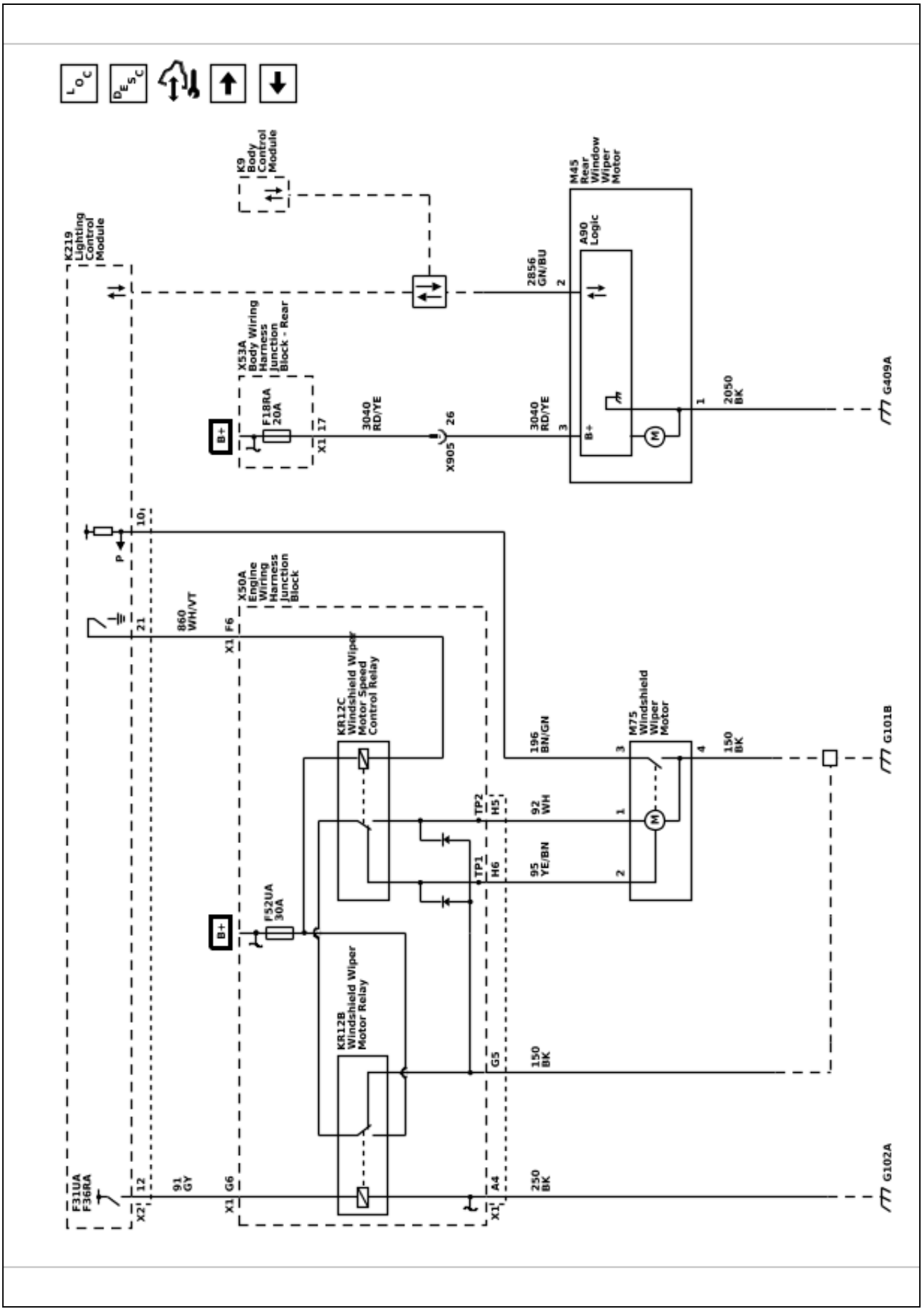

6613320

Wiper/Washer Schematics (Washer Pump)

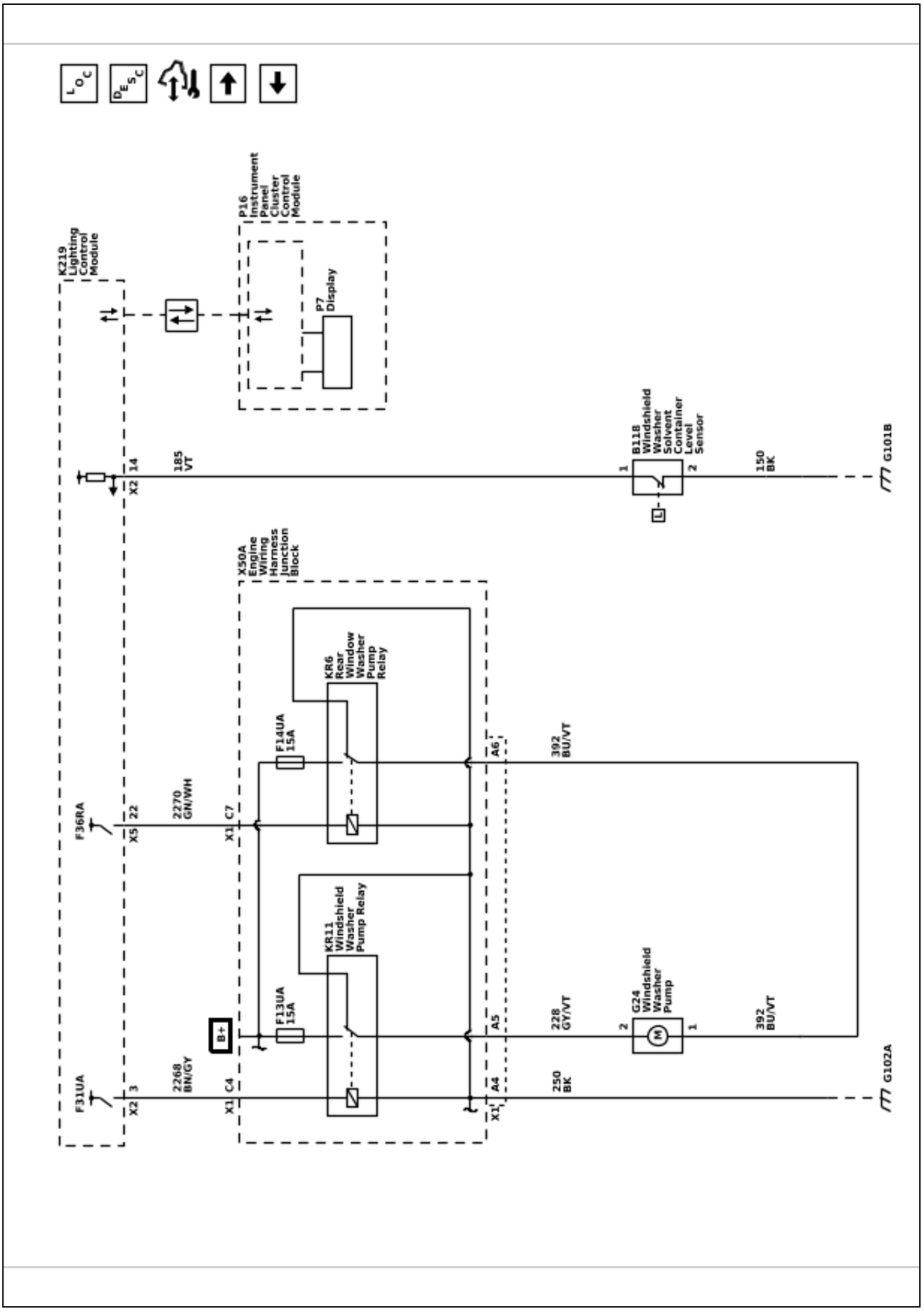

6613321

Wiper/Washer Schematics (Windshield Outside Moisture/Ambient Light and Humidity Sensor)

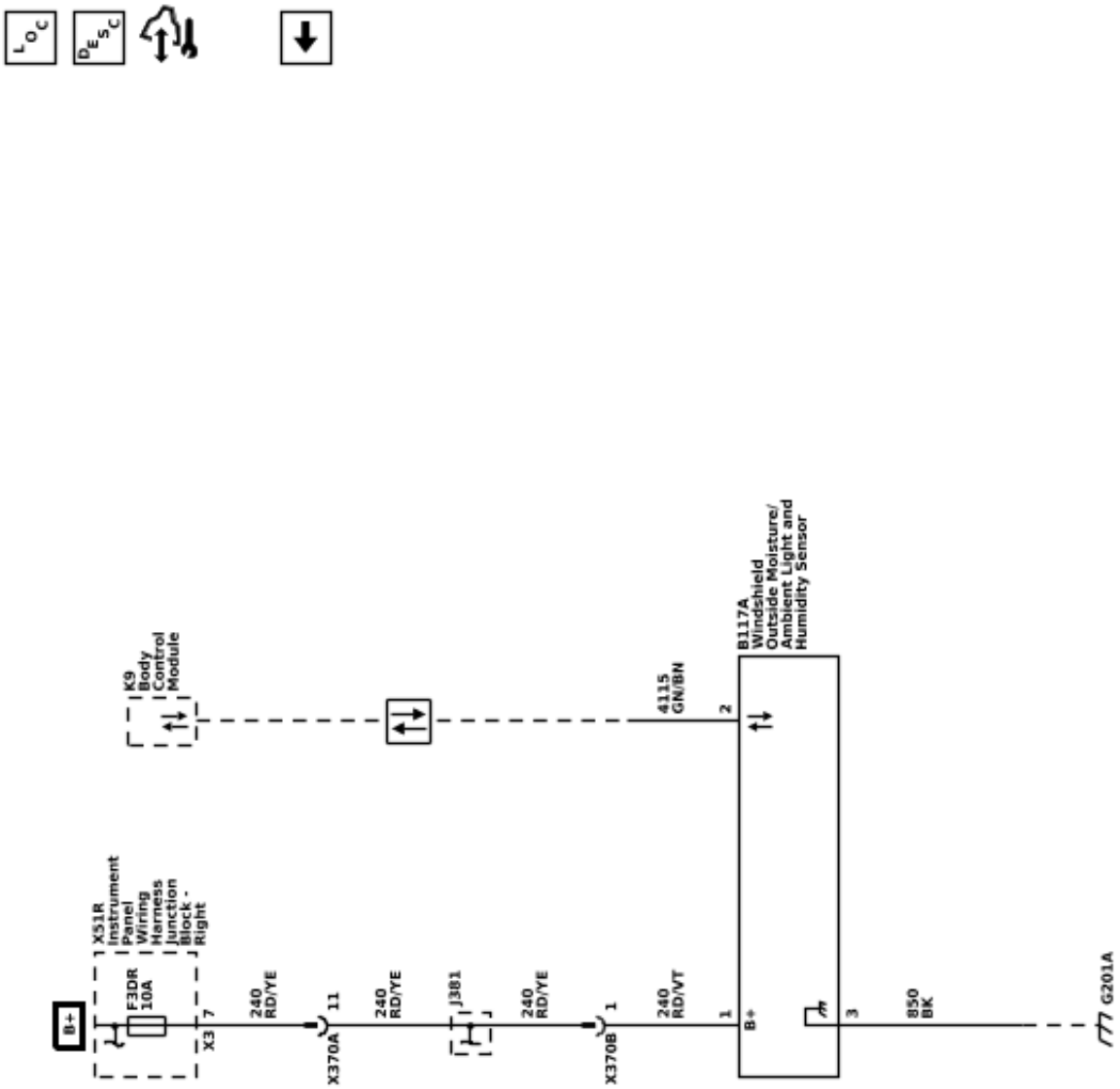

6613322

Description and Operation

Wiper/Washer System Description and Operation

Front Windshield Wiper Operation

The windshield wipers system allows the driver to clear the vehicle's windshield using a discrete switch or through an automatic rain sensing system. The windshield wiper system functions through a primary control, but also allows redundant high speed-only operation in the event of a system fault. The wiper systems uses the S82 Windshield Wiper/Washer Switch as the primary means of driver control, along with the B117A Windshield Outside Moisture/Ambient Light and Humidity Sensor to modulate intermittent wiper operation. The S82 Windshield Wiper/Washer Switch is a discrete input to the K9 Body Control Module. The K9 Body Control Module communicates with the K219 Lighting Control Module over CAN, and with the B117A Windshield Outside Moisture/Ambient Light and Humidity Sensor over LIN, to control wiper activation.

Low Speed Wiper Operation
With the S82 Windshield Wiper/Washer Switch in the low speed position, the discrete signal circuit to the K9 Body Control Module is pulled down through two resistors in a resistor ladder to a low reference provided by the K9 Body Control Module. The K9 Body Control Module communicates with the K219 Lighting Control Module over CAN, requesting consistent low speed wiping operation. To initiate low speed operation, the K219 Lighting Control Module energizes the KR12B Windshield Wiper Relay. This allows battery voltage from the wiper fuse to be applied through the switched contacts of the KR12B Windshield Wiper Relay, through the normally closed contacts of the KR12C Windshield Wiper Speed Control Relay, to the windshield wiper low speed control circuit of the M75 Windshield Wiper Motor.

Intermittent Wiper Operation
With the S82 Windshield Wiper/Washer Switch in the intermittent position, the discrete signal circuit to the K9 Body Control Module is pulled down through a number of resistors within a resistor ladder to a low reference provided by the K9 Body Control Module. The number of resistors the signal travels through is dependent on the intermittent selection made on the S82 Windshield Wiper/Washer Switch. The K9 Body Control Module interprets this range of voltage pull-down as a request for intermittent wiper activation, with each pull-down voltage value equating an intermittent delay (sensitivity) level. If the rain sense is enabled the K9 Body Control Module communicates with the B117A Windshield Outside Moisture/Ambient Light and Humidity Sensor via LIN. The B117A Windshield Outside Moisture/Ambient Light and Humidity Sensor utilizes windshield optics to determine the amount of water on the windshield and will communicate this info to the K9 Body Control Module, which will vary wiping cadence based on the intermittent sensitivity selection on the S82 Windshield Wiper/Washer Switch and the amount of water on the windshield. If the rain sense is disabled, the K9 Body Control will vary the wiping cadence based on a preset amount of time determined by the intermittent delay selection on the S82 Windshield Wiper/Washer Switch. To initiate wiper operation, the K219 Lighting Control Module energizes the KR12B Windshield Wiper Relay. This allows battery voltage from the wiper fuse to be applied through the switched contacts of the KR12B Windshield Wiper Relay, through the normally closed contacts of the KR12C Windshield Wiper Speed Control Relay, to the low speed control circuit of the M75 Windshield Wiper Motor.

High Speed Wiper Operation
With the S82 Windshield Wiper/Washer Switch in the high speed position, the discrete signal circuit to the K9 Body Control Module is pulled down through two resistors in a resistor ladder to a low reference provided by the K9 Body Control Module. The K9 Body Control Module interprets this specific voltage pull-down as a request for wiper activation. In addition to this pull-down signal, a second switch in the S82 Windshield Wiper/Washer Switch is also pulled down to low reference. This signal is a discrete input to the K219 Lighting Control Module. The K219 Lighting Control Module requests wiping operation. To initiate high speed operation, the K219 Lighting Control Module energizes the KR12B Windshield Wiper Relay and grounds the KR12C Windshield Wiper Speed Control Relay. This allows battery voltage from the wiper fuse to be applied through the switched contacts of the KR12B Windshield Wiper Relay, through the switched contacts of the KR12C Windshield Wiper Speed Control Relay, to the windshield wiper motor high speed control circuit of the M75 Windshield Wiper Motor.

Mist (Single Wipe) Operation
The mist (single wipe) position is a momentary switch position that will return the S82 Windshield Wiper/Washer Switch to the off position as soon as the switch is released. With the S82 Windshield Wiper/Washer Switch in the mist (single wipe) position, the discrete signal circuit to the K9 Body Control Module is pulled down through two resistors in a resistor ladder to a low reference provided by the K9 Body Control Module. The K9 Body Control Module interprets this specific voltage pull-down as a request for wiper activation. The K9 Body Control Module communicates with the K219 Lighting Control Module via CAN, requesting consistent low speed wiping operation as long as the S82 Windshield Wiper/Washer Switch is held in the mist (single wipe) position. If the mist (single wipe) position

is only briefly selected, the K9 Body Control Module will request only a single wipe.

Wiper Park Operation
With the S82 Windshield Wiper/Washer Switch in the off position, the discrete signal circuit to the K9 Body Control Module is pulled down through one resistor in a resistor ladder to a low reference provided by the K9 Body Control Module. The K9 Body Control Module interprets this specific voltage pull-down as a request to stop wiper activation. The K9 Body Control Module communicates with the K219 Lighting Control Module via CAN, requesting wiper operation stop. At this time, the K219 Lighting Control Module will deactivate the KR12B Windshield Wiper Relay and KR12C Windshield Wiper Speed Control Relay. The relay contacts will switch back to their normally closed position and will apply ground to the wiper motor power inputs through the normally closed contacts of the wiper relays. This deactivates and dynamically brakes the wiper motor in the park position. When the wiper switch is turned to the OFF position while the wiper motor is somewhere in mid-cycle, the K219 Lighting Control Module will continue to operate the motor until the wipers reach the park position. If the ignition is turned OFF while the wipers are in mid-cycle, the wipers will stop immediately, regardless of position. The K219 Lighting Control Module will park the wipers next time the ignition is turned ON.

The windshield wiper system consists of the following electrical components:

- S82 Windshield Wiper/Washer Switch
- K9 Body Control Module
- K219 Lighting Control Module
- KR12B Windshield Wiper Relay
- KR12C Windshield Wiper Speed Control Relay
- B117A Windshield Outside Moisture/Ambient Light and Humidity Sensor
- M75 Windshield Wiper Motor

Front Windshield Wiper Components

S82 Windshield Wiper/Washer Switch
The S82 Windshield Wiper/Washer Switch is the primary input to the K9 Body Control Module for the driver to control windshield wiper operation. The S82 Windshield Wiper/Washer Switch also provides discrete input to the K219 Exterior Lighting Control Module and M75 Windshield Wiper Motor during high speed wiper operation.

The S82 Windshield Wiper/Washer Switch contains three individual internal switch. One switch changes between mist (single wipe), off, intermittent, low speed, and high speed selection. The second switch changes with differing intermittent sensitivity selection. The third switch is only active when high speed wiper operation is selected. A resistor ladder is also used to determine switch selection and intermittent sensitivity selection. The high speed switch does not utilize the resistor ladder.

The K9 Body Control Module provides the S82 Windshield Wiper/Washer Switch with ground through a single low reference circuit and monitors the switch position through a single signal circuit. Voltage is applied by the K9 Body Control Module to this signal circuit and voltage drop is monitored to determine switch selection. This voltage drop will vary depending on the number of resistors in the resistor ladder, which changes depending on switch position. In the off position, current flows through a single resistor. In the mist (single wipe), low speed, and high speed position, current flows through two resistors. In the intermittent position, current flows through three or more resistors, depending on the intermittent sensitivity selected.

The S82 Windshield Wiper/Washer Switch provides a discrete switch input to the K219 Lighting Control Module during high speed wiper operation. Voltage is applied by the K219 Lighting Control Module to this signal circuit and voltage drop is monitored to determine switch selection. When high speed operation is selected, the signal circuit is pulled to ground (low reference).

K9 Body Control Module
The K9 Body Control Module will send a CAN message to the K219 Lighting Control Module to request wiper operation. The K9 Body Control Module responds to input requests from the S82 Windshield Wiper/Washer Switch. The K9 Body Control Module provides a constant ground for the S82 Windshield Wiper/Washer Switch and monitors a signal circuit to determine the requested windshield wiper position.

The K9 Body Control Module communicates with the B117A Windshield Outside Moisture/Ambient Light and Humidity Sensor via LIN. Messages are received from the B117A Windshield Outside Moisture/Ambient Light and Humidity Sensor to indicate the amount of water on the windshield.

K219 Lighting Control Module
The K219 Lighting Control Module controls the wiper motor via two PCB relays (KR12B Windshield Wiper Relay and KR12C Windshield Wiper Speed Control Relay). The K219 Lighting Control Module receives a message from K9 Body Control Module over CAN to determine what type of wiper operation is requested.

KR12B Windshield Wiper Relay
The KR12B Windshield Wiper Relay supplies B+ to the M75 Windshield Wiper Motor and is controlled by the K219 Lighting Control Module. The coil side of the relay receives a constant chassis ground and the switch side receives a constant B+. When wiper operation is

requested, the K219 Lighting Control Module will provide voltage to the coil side of the relay. This will energize the relay, closing the high current contact, and supply B+ to the M75 Windshield Wiper Motor through the KR12C Windshield Wiper Speed Control Relay, enabling wiper operation.

KR12C Windshield Wiper Speed Control Relay
The KR12C Windshield Wiper Speed Control Relay controls B+ to the M75 Windshield Wiper Motor and is controlled by the K219 Lighting Control Module. The coil side of the relay receives a ground controlled by the K219 Lighting Control Module. The switch side of the relay receives B+ through the KR12B Windshield Wiper Relay. When high speed wiper operation is requested, the K219 Lighting Control Module will provide ground to the coil side of the relay. This will energize the relay, closing the high current contact, and supply the B+ to the M75 Windshield Wiper Motor high speed control, enabling high speed wiper operation.

B117A Windshield Outside Moisture/Ambient Light and Humidity Sensor
Note: Due to the sensitivity of the sensor, the wipers may swipe once upon start up or rapid lighting changes.

The B117A Windshield Outside Moisture/Ambient Light and Humidity Sensor utilizes an internal infrared LED and an optic sensor to determine the amount of water on the windshield. The infrared LED bounces infrared light against the inside of the windshield. The optic sensor measures the amount of light returned after bouncing off the windshield. With a dry windshield, all light bounced off the windshield is returned to the optic sensor. As water accumulates on the windshield, the light input to the optic sensor is diffused and reduced. The amount of light reduction corresponds directly to the amount of water on the windshield. The B117A Windshield Outside Moisture/Ambient Light and Humidity Sensor interprets the amount of light returned and communicates this info to the K9 Body Control Module, which will control intermittent wiper operation based on the sensitivity selection of the S82 Windshield Wiper/Washer Switch and the amount of water on the windshield.

M75 Windshield Wiper Motor
The M75 Windshield Wiper Motor receives a constant chassis ground. B+ is controlled by the KR12B Windshield Wiper Relay and KR12C Windshield Wiper Speed Control Relay being operated by the K219 Lighting Control Module.

The M75 Windshield Wiper Motor includes a DC motor and an internal position switch to indicate the wiper park position. When wiper operation is requested, the DC motor spins. The spinning motor is directed to a wiping motion through the windshield wiper transmission. When wiper operation is no longer required, the M75 Windshield Wiper Motor will continue spinning until the internal position switch indicates it is in the park position.

Rear Window Wiper Operation

The rear window wiper system allows the driver to clear the vehicle's rear window using a discrete switch. The rear wiper systems uses the S82 Windshield Wiper/Washer Switch as the means of control. The S82 Windshield Wiper/Washer Switch is a discrete input to the K9 Body Control Module. The K9 Body Control Module communicates with the M45 Rear Wiper Motor via LIN to control wiper activation.

Low Speed Wiper Operation
With the S82 Windshield Wiper/Washer Switch in the low speed position, the discrete signal circuit to the K9 Body Control Module is pulled down through one resistor in a resistor ladder to a low reference provided by the K9 Body Control Module. The K9 Body Control Module communicates with the M45 Rear Wiper Motor over LIN, requesting consistent low speed wiping operation.

Intermittent Wiper Operation
With the S82 Windshield Wiper/Washer Switch in the intermittent position, the discrete signal circuit to the K9 Body Control Module is pulled down through a two resistors in a resistor ladder to a low reference provided by the K9 Body Control Module. The K9 Body Control Module communicates with the M45 Rear Wiper Motor over LIN, requesting consistent intermittent wiping operation. The K9 Body Control will vary the wiping cadence based on a preset amount of time.

Mist (Single Wipe) Operation
The mist (single wipe) position is a momentary switch position that will return the S82 Windshield Wiper/Washer Switch to the off position as soon as the switch is released. With the S82 Windshield Wiper/Washer Switch in the mist (single wipe) position, the discrete signal circuit to the K9 Body Control Module is pulled down through three resistors in a resistor ladder to a low reference provided by the K9 Body Control Module. The K9 Body Control Module interprets this specific voltage pull-down as a request for wiper activation. The K9 Body Control Module communicates with the M45 Rear Wiper Motor via LIN, requesting consistent low speed wiping operation as long as the S82 Windshield Wiper/Washer Switch is held in the mist (single wipe) position. If the mist (single wipe) position is only briefly selected, the K9 Body Control Module will request only a single wipe.

Wiper Park Operation
With the S82 Windshield Wiper/Washer Switch in the off position, the discrete signal circuit to the K9 Body Control Module is opened. The K9 Body Control Module interprets this as a request to stop wiper activation. The K9 Body Control Module communicates

with the M45 Rear Wiper Motor via LIN, requesting wiper operation stop. The M45 Rear Wiper Motor will park the rear window wiper in their lowest position. When the wiper switch is turned to the OFF position while the wiper motor is somewhere in mid-cycle, the K9 Body Control Module will continue to operate the motor until the wiper reaches the park position. If the ignition is turned OFF while the wipers are in mid-cycle, the wipers will stop immediately, regardless of position. The K9 Body Control Module will park the wipers next time the ignition is turned ON.

The rear window wiper system consists of the following electrical components:

- S82 Windshield Wiper/Washer Switch
- K9 Body Control Module
- M45 Rear Wiper Motor

Rear Window Wiper Components

S82 Windshield Wiper/Washer Switch

The S82 Windshield Wiper/Washer Switch is the primary input to the K9 Body Control Module for the driver to control rear window wiper operation.

The S82 Windshield Wiper/Washer Switch contains one individual internal switch used to request mist (single wipe) off, intermittent, and low speed selection.

The K9 Body Control Module provides the S82 Windshield Wiper/Washer Switch with ground through a single low reference circuit and monitors the switch position through a single signal circuit. Voltage is applied by the K9 Body Control Module to this signal circuit and voltage drop is monitored to determine switch selection. This voltage drop will vary depending on the number of resistors in the resistor ladder, which changes depending on switch position. In the off position, current doesn't flow. In the mist (single wipe) position current flows through three resistors, in the intermittent speed position current flows through two resistors, and in the low speed position, current flows through one resistor.

K9 Body Control Module

The K9 Body Control Module will send a LIN message to the M45 Rear Wiper Motor to request wiper operation. The K9 Body Control Module responds to input requests from the S82 Windshield Wiper/Washer Switch. The K9 Body Control Module provides a constant ground for the S82 Windshield Wiper/Washer Switch and monitors a signal circuit to determine the requested windshield wiper position.

M45 Rear Wiper Motor

The M45 Rear Wiper Motor receives a constant B+ and chassis ground.

The M45 Rear Wiper Motor includes a DC motor and an internal position switch to indicate the wiper park position. When wiper operation is requested, the DC motor spins. The spinning motor is directed to a wiping motion through the windshield wiper transmission. When wiper operation is no longer required, the M45 Rear Wiper Motor will continue spinning until the internal position switch indicates it is in the park position.

Windshield Washer Operation

The windshield washer system allows the driver to clean the vehicle's windshield or rear window using a discrete switch. The washer system uses the S82 Windshield Wiper/Washer Switch as the primary means of driver control. The S82 Windshield Wiper/Washer Switch is a discrete input to the K9 Body Control Module. The K9 Body Control Module communicates with the K219 Lighting Control Module over CAN to control G24 Windshield Washer Pump activation. The K9 Body Control Module also communicates with the K219 Lighting Control Module to control B+ to the M75 Windshield Wiper Motor during operation.

The windshield wiper system consists of the following electrical components:

- S82 Windshield Wiper/Washer Switch
- K9 Body Control Module
- K219 Lighting Control Module
- KR12B Windshield Wiper Relay
- KR6 Rear Window Washer Pump Relay
- KR11 Windshield Washer Pump Relay
- G24 Windshield Washer Pump
- M45 Rear Wiper Motor
- M75 Windshield Wiper Motor
- B118B Windshield Washer Fluid Level Switch

Windshield Washer Components

S82 Windshield Wiper/Washer Switch

The S82 Windshield Wiper/Washer Switch is the primary input to the K9 Body Control Module for the driver to control washer operation.

For front washers, the K9 Body Control Module provides the S82 Windshield Wiper/Washer Switch with ground through a single low reference circuit and monitors the two switch positions through two signal circuits. Voltage is applied by the K9 Body Control Module to the signal circuits and voltage drop is monitored to determine switch selection. For front washers, the S82 Windshield Wiper/Washer Switch contains an internal switch dedicated to front windshield washer operation. When the switch is closed, the signal circuit is pulled to ground, indicating front washer operation is requested. For rear washers, the switch is part of a resistor ladder. The voltage drop will vary depending on the number of resistors in the

resistor ladder. When the switch is closed, the signal circuit is pulled to ground through three resistors, indicating rear washer operation is requested.

K9 Body Control Module
The K9 Body Control Module responds to input requests from the S82 Windshield Wiper/Washer Switch. The K9 Body Control Module provides a constant ground for the S82 Windshield Wiper/Washer Switch and monitors a signal circuit to determine the requested windshield wiper position.

When front washer operation is requested, the K9 Body Control Module will send a CAN message to the K219 Lighting Control Module to enable the G24 Windshield Washer Pump through the KR11 Windshield Washer Pump Relay, as well as supply B+ to the M75 Windshield Wiper Motor for low speed wiper operation.

When rear washer operation is requested, the K9 Body Control Module will send a CAN message to the K219 Lighting Control Module to enable the G24 Windshield Washer Pump through the KR6 Rear Window Washer Pump Relay, as well as send a signal through LIN to the M45 Rear Wiper Motor for low speed wiper operation.

K219 Lighting Control Module
The K219 Lighting Control Module controls B+ to the G24 Windshield Washer Pump. When washer operation is requested from a CAN message from the K9 Body Control Module, the K219 Lighting Control Module will apply voltage via a high side driver to the KR11 Windshield Washer Pump Relay or the KR6 Rear Window Washer Pump Relay. The K219 Lighting Control Module also controls B+ to the M75 Windshield Wiper Motor. When washer operation is requested, the K219 Lighting Control Module will apply voltage via a high side driver to the KR12B Windshield Wiper Relay.

The K219 Lighting Control Module also monitors the B118B Windshield Washer Fluid Level Switch through a discrete signal circuit.

KR12B Windshield Wiper Relay
The KR12B Windshield Wiper Relay supplies B+ to the M75 Windshield Wiper Motor and is controlled by the K219 Lighting Control Module. The coil side of the relay receives a constant chassis ground and the switch side receives a constant B+. When wiper operation is requested, the K219 Lighting Control Module will provide voltage to the coil side of the relay. This will energize the relay, closing the high current contact, and supply B+ to the M75 Windshield Wiper Motor through the KR12C Windshield Wiper Speed Control Relay, enabling wiper operation.

KR6 Rear Window Washer Pump Relay
The KR6 Rear Window Washer Pump Relay supplies B+ to the G24 Windshield Washer Pump and is controlled by the K219 Lighting Control Module. The coil side of the relay receives a constant chassis ground and the switch side receives a constant B+. When washer operation is requested, the K219 Lighting Control Module will provide voltage to the coil side of the relay. This will energize the relay, closing the high current contact, and supply B+ to the G24 Windshield Washer Pump, enabling washer pump operation.

KR11 Windshield Washer Pump Relay
The KR11 Windshield Washer Pump Relay supplies B+ to the G24 Windshield Washer Pump and is controlled by the K219 Lighting Control Module. The coil side of the relay receives a constant chassis ground and the switch side receives a constant B+. When wiper operation is requested, the K219 Lighting Control Module will provide voltage to the coil side of the relay. This will energize the relay, closing the high current contact, and supply B+ to the G24 Windshield Washer Pump, enabling washer pump operation.

G24 Windshield Washer Pump
The G24 Windshield Washer Pump is a reversible motor that receives a ground through the non activated relay. B+ is controlled by the KR11 Windshield Washer Pump Relay for front washer operation, or the KR6 Rear Window Washer Pump Relay for rear washer operation. With voltage applied, a DC motor spins, connecting and pressurizing washer fluid from the washer fluid reservoir. The pressurized washer fluid is deposited on the windshield or rear window through a series of lines and nozzles.

M45 Rear Window Wiper Motor
The M45 Rear Wiper Motor communicates with the K9 Body Control Module via LIN and responds to requests to turn the rear wipers on and off. The M45 Rear Wiper Motor receives a constant B+ and chassis ground. In operation, the M45 Rear Wiper Motor monitors LIN messages to determine when washer operation is requested. The M45 Rear Wiper Motor will wipe at low speed when washer operation is requested.

The M45 Rear Wiper Motor includes a DC motor and an internal position switch to indicate the wiper park position. When washer operation is requested, the DC motor spins. When wiper operation is no longer required, the M45 Rear Wiper Motor will continue spinning until the internal position switch indicates it is in the park position.

M75 Windshield Wiper Motor
The M75 Windshield Wiper Motor receives a constant chassis ground. B+ is controlled by the KR12B Windshield Wiper Relay and KR12C Windshield Wiper Speed Control Relay being operated by the K219 Lighting Control Module. The M75 Windshield Wiper Motor will wiper at low speed when washer operation is requested.

The M75 Windshield Wiper Motor includes a DC motor and an internal position switch to indicate the wiper park position. When wiper operation is requested, the DC motor spins. The spinning motor is directed to a wiping motion through the windshield wiper transmission. When wiper operation is no longer required, the M75 Windshield Wiper Motor will continue spinning until the internal position switch indicates it is in the park position.

B118B Windshield Washer Fluid Level Switch

The B118B Windshield Washer Fluid Level Switch receives a constant chassis ground. A signal circuit is monitored by the K219 Lighting Control Module. The K219 Lighting Control Module applies voltage to the signal circuit. When the B118B Windshield Washer Fluid Level Switch is closed, voltage on the signal circuit is pulled to ground, indicating fluid in the washer fluid reservoir.

Section 1

Brakes

Antilock Brake System **1-2**
Schematic and Routing Diagrams **1-2**
Antilock Brake System Schematics 1-3
Description and Operation **1-6**
ABS Description and Operation 1-6
Disc Brakes **1-11**
Schematic and Routing Diagrams **1-11**
Disc Brake Schematics 1-12
Description and Operation **1-13**
Disc Brake System Description and Operation 1-13
Hydraulic Brakes **1-14**
Schematic and Routing Diagrams **1-14**
Hydraulic Brake Schematics 1-15
Description and Operation **1-16**
Brake Assist System Description and Operation 1-16
Hydraulic Brake System Description and Operation 1-21

Brakes

Antilock Brake System

Schematic and Routing Diagrams

Antilock Brake System Schematics (Module Power, Ground, Serial Data, Indicators, and Subsystem References)

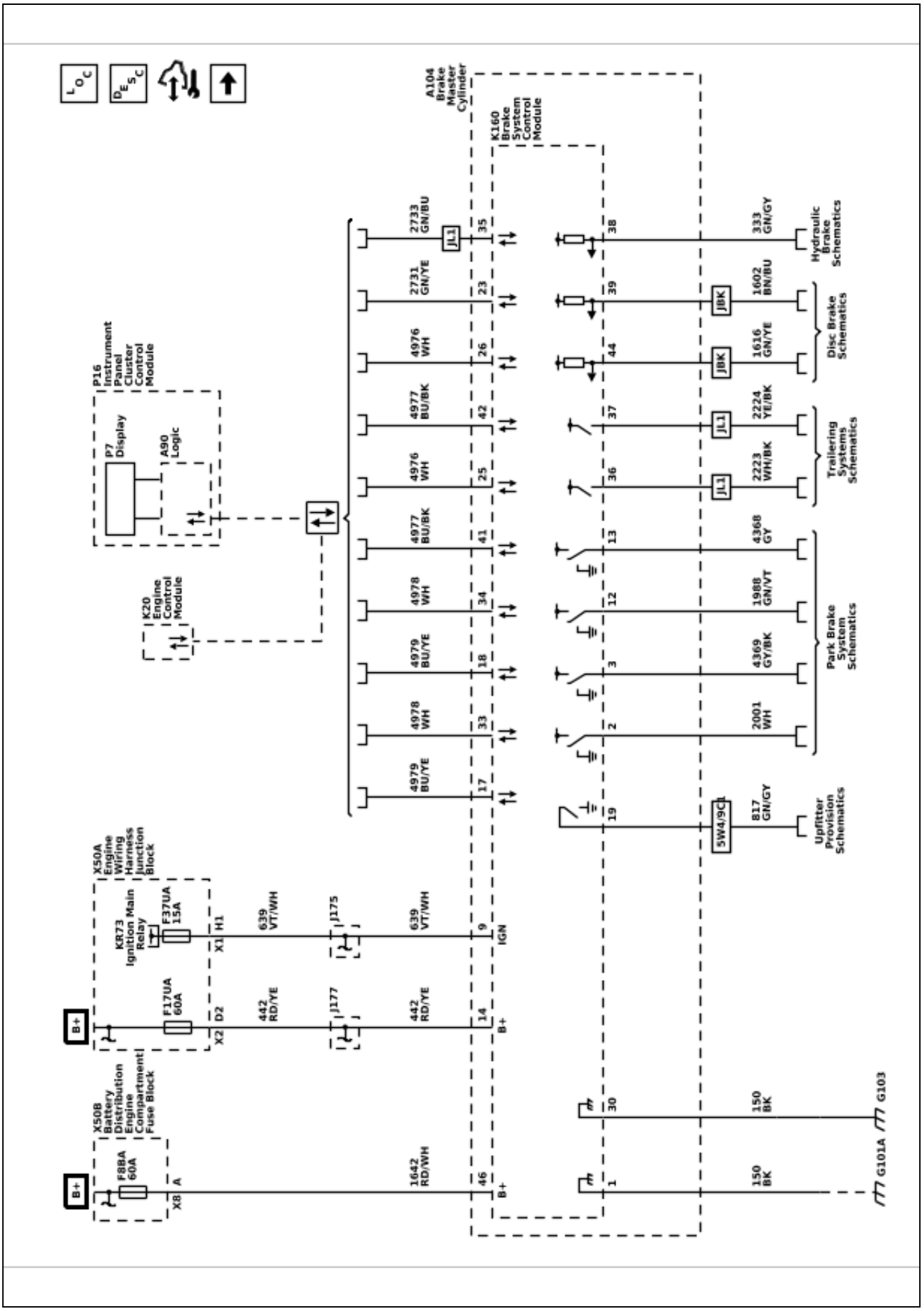

6613324

Antilock Brake System Schematics (Wheel Speed Signals)

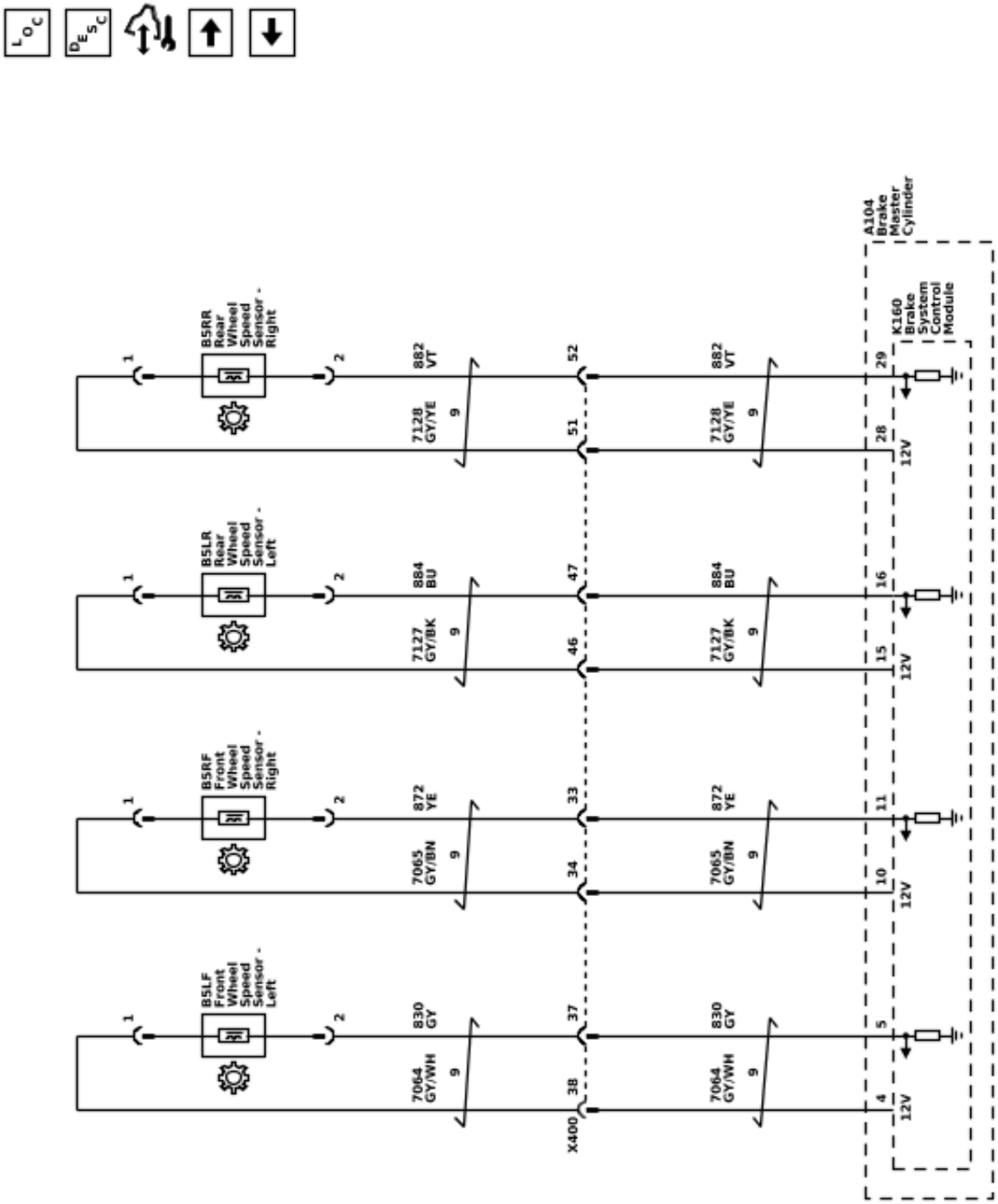

6613325

Antilock Brake System Schematics (Traction and Hill Descent Controls)

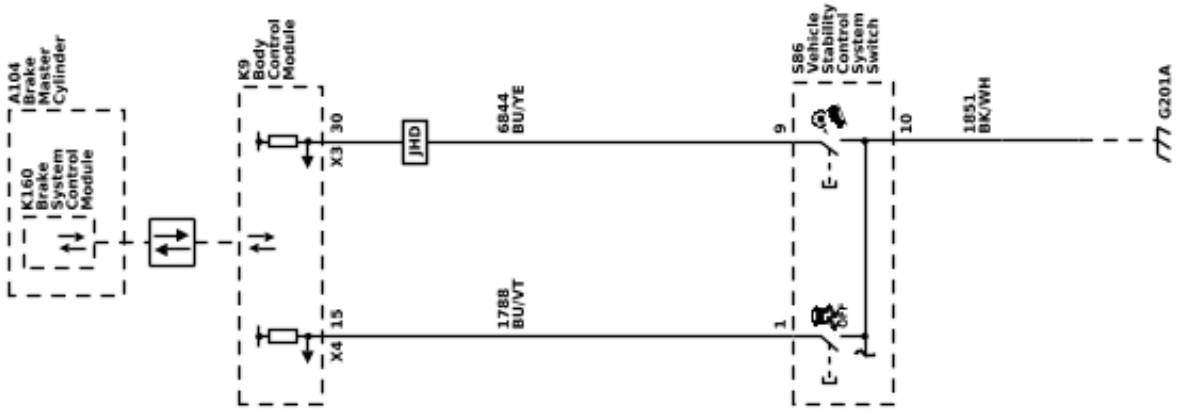

Description and Operation

ABS Description and Operation

Description and Operation

This vehicle is equipped with a Integrated Brake Control (IBC), also known as Brake System Control Module.

The Integrated Brake Control is an electromechanical device that interprets and converts driver input and provides a corresponding hydraulic pressure output to activate a standard brake system according to the drivers demand. The electro-hydraulic boost system replaces the conventional vacuum-based power assist brake system, which provides an advantage in efficiency. The electro-hydraulic brake system supplies "on-demand" power when the driver presses the brake pedal. In an event of no electrical energy or failure condition the drivers input is mechanically converted to a hydraulic pressure output.

Depending on options, the following vehicle performance enhancement systems are provided.

- ABS
- Traction Control
- Stability Control
- Brake Pad Life Monitoring
- Dynamic Rear Proportioning
- Panic Brake Assist
- Teen Mode Support
- Trailer Sway Control
- Engine Drag Control
- Brake Drying/Cleaning
- Extended Hill Hold Start Assist
- Hill Descent Control
- Collision Imminent Braking
- Full Speed Range Adaptive Cruise Control Braking
- Trailer Brake Control
- Park Brake Control Motor on Caliper/Drum (with Push/Push)
- Unidirectional WSS
- CAN messages:
  - Chassis System Total Brake Axle Torque
  - DIC message during ABS (no pedal feedback)
  - Switch based ESC disable
  - Switch based Traction disable
  - ESC enable
  - OBDII - Rough Road Wheel Speed Usage
- The Body control module (BCM) monitors the brake pedal position sensor signal when the brake pedal is applied and sends a high speed serial data message to the Brake System Control Module indicating the brake pedal position.
- Instrument cluster - The instrument cluster displays the vehicle speed based on the information from the engine control module. The engine control module sends the vehicle speed information via a high speed serial data to the body control module. The body control module then sends the vehicle speed information via serial data to the instrument cluster in order to display the vehicle speed, either in kilometers or miles, based on the vehicle requirements.
- Multi-axis acceleration sensor - The yaw rate, lateral acceleration and longitudinal acceleration sensors are combined into one multi-axis acceleration sensor, internal to the inflatable restraint sensing and diagnostic module. The Brake System Control Module receives serial data message inputs from the yaw rate, lateral acceleration and longitudinal acceleration sensor and activates stability control and hill hold start assist function depending on multi-axis acceleration sensor input.
- Multifunction switch - The traction control switch is a multifunction momentary switch. The body control module monitors the signal circuit from the traction control switch and sends a high speed serial data message to the Brake System Control Module indicating the switch position. The traction control and stability control are manually disabled or enabled by pressing the traction control switch.
- Steering wheel angle sensor - The Brake System Control Module receives serial data message inputs from the steering angle sensor. The steering wheel angle sensor signal is used to calculate the intended driving direction. The steering wheel angle sensor is installed as an internal part of the power steering gear.
- Transmission control module - The Brake System Control Module receives high speed serial data message inputs from the transmission control module indicating the gear position of the transmission for hill start assist or hill hold functions.
- Wheel speed sensors – This vehicle is equipped with unique directional wheel speed sensors that can detect wheel direction as well as zero wheel speed. The wheel speed sensors are Active sensors that receive a 12 V power supply voltage from the Brake System Control Module and provide an output signal to the module. As the wheel spins, the wheel speed sensor sends the Brake System Control Module a DC square wave signal. The Brake System Control Module uses the

frequency of the square wave signal to calculate the wheel speed.

Power-Up-Self Test

The Brake System Control Module is able to detect many malfunctions whenever the ignition is ON. However, certain failures cannot be detected unless active diagnostic tests are performed on the components. Shorted solenoid coil or motor windings, for example, cannot be detected until the components are commanded ON by the Brake System Control Module. Therefore, a power-up self-test is performed to verify correct operation of system components. The Brake System Control Module performs the first phase of the power-up self-test when the ignition is first turned ON. This phase consists of internal self-testing of the Brake System Control Module along with electrical checks of system sensors and circuits.

Antilock Brake System (ABS) Features

The active control/modulation of brake fluid hydraulic modulates pressure to the front and/or rear brake corner subsystems (brake torque control) to preclude wheel lock-up and enhance tire-to-road longitudinal braking traction. Wheel lock-up (sliding wheel, not rolling wheel) occurs when the wheel brake torque exceeds the available tire-to-road traction. Avoidance of wheel lock-up provides the driver with the ability to maintain vehicle stability and steer-ability. Improved tire-to-road longitudinal braking traction minimizes vehicle stopping distance.

Brake Assist Features

The Brake Assist provides additional brake pressure over the pressure provided by the conventional brake apply system.

Panic Brake Assist

This feature will apply brakes more quickly when a panic brake situation is determined. Panic Brake Assist detects that the driver intent is to stop the vehicle as quickly as possible, but does not apply sufficient brake pressure to do so. The feature will detect the driver intent then actively apply brake pressure to maximum pressure, thus activating the ABS system and stopping the vehicle as quickly as possible.

Hydraulic Fade Compensation

Based on a brake disc/pad temperature estimate, driver applied master cylinder pressure and vehicle deceleration rate, Hydraulic Fade Compensation will increase brake system pressure above driver applied brake pressure when the brake system determines a gross fade condition.

The goal of providing additional brake system pressure is to reduce stopping distance during high deceleration requests from the driver. The driver will experience fading brakes while using low or medium brake pedal force application. The Hydraulic Fade Compensation will only activate during high brake pedal force application.

Rear Brake Boost

The Rear Brake Boost function provides rear hydraulic brake assist to ensure that all four corners are achieving maximum braking during ABS. When vehicle loading is heavily rear axle biased the rear brakes may not utilize all of the available road adhesion. The hydraulic Rear Brake Boost feature is designed to provide additional pressure to the rear brakes when the front brakes ABS are activated and the rear wheels have low slip.

Electronic Brake Pre-Fill

This feature is used to reduce the brake response time when the driver quickly releases the accelerator pedal. This will also be used to support the use of low drag calipers.

Motor on Caliper Torque Overlay

This feature is used to reduce the driver's braking effort when in backup (no power) mode. Torque is applied with the Electric Park Brake motors on the front or rear calipers, preferably isolating that hydraulic circuit, to provide assist. When in this mode, the Electric Park Brake motors are controlled to apply torque in accordance with the driver's commanded deceleration, instead of clamping to a certain force.

Electronic Stability Control (ESC) Features

Roll Over Mitigation / Preemptive ESC

Using the standard ESC sensor set, Roll Over Mitigation will detect driving situations that could cause a vehicle rollover. After detection, ESC brake control will be modified to reduce the chance of vehicle rollover.

Trailer Sway Control

Trailer Sway Control uses the ESC system to detect trailer instability and apply differential braking to dampen out trailer oscillation and instability. Trailer Sway Control will detect the vehicle dynamic characteristics associated with trailer sway and actuate the vehicle’s brakes and reduce engine torque, if required, to dampen or eliminate trailer oscillations. Trailer Sway Control shall recognize repeated trailer instability and communicate to the display device to warn a driver of unsafe trailer setup.

Torque Vectoring by Brakes

Torque Vectoring by Brakes enhances vehicle agility by using active brake applies and engine torque requests

to maximize traction on drive wheels. While cornering, brakes are applied to the inside drive wheels, thus allowing more torque to the outside wheels without slipping the inside wheels. Increasing the engine torque, above driver request, gives more torque to outer wheels. Torque Vectoring by Brakes is designed for all around performance, while this feature is solely designed for high cornering maneuvers.

Flat Tire ESC Enable
If flat tire is detected, ESC system shall not be allowed to be disabled by the driver (ESC shall be re-enabled if driver has already disabled). The traction control system will be allowed to be disabled by the driver.

ESC Control With Vehicle Weight Estimation
Brake System Control Module shall have the capability to estimate vehicle weight while the vehicle is being driven. This feature shall modify ESC control based on estimated vehicle weight when a compact spare tire is detected on the rear axle.

Traction Control System (TCS) Features

Vehicle Stuck Control
The traction control system shall recognize a vehicle “stuck” condition by monitoring excessive wheel slip for greater than 5 seconds with a vehicle reference velocity of less than 3 kph. Once detected, TCS will allow additional wheel slip of 5% to “dig” the vehicle out. This feature does not guarantee the vehicle to get unstuck, only to assist the driver.

Power Hop Control
Power hop is defined as an oscillation of the driven wheels due to acceleration on high coefficient surfaces. This wheel oscillation causes the vehicle to bounce resulting in driver discomfort, failure of driveline components and potentially other damage to the vehicle. This feature will be detected using Wheel speed sensor signal when TCS is “ ON”. In case TCS is “ OFF”, Brake System Control Module and ECM will be required to mitigate power hop. If the vehicle is exhibiting this signature, the traction control system will attenuate power hop by reducing engine torque and applying brake pressure.

Engine Drag Control
This feature is designed to mitigate drop-throttle-oversteer/understeer.

On a rear-wheel-drive vehicle during maximum cornering while applying throttle, the vehicle could exhibit oversteer when the driver quickly releases the throttle. This feature will slowly reduce the engine torque in order to maintain vehicle stability.

The Enabling Conditions include: Engine is required to be running, Clutch is released for Manual Trans , Vehicle speed is above 18kph (12mph) and the Powertrain is engaged through fault message from ECM/TCM/PCM

Enhanced Off Road Control (Rock Crawling)
This feature is intended to maximize rock crawling capability while in Offroad mode or 4 Low transfer case mode**.** This feature shall be enabled when in Offroad mode (if available) or when transfer case is in 4 Low. The traction control calibration shall be biased towards low speed, active capability through the use of more brake control with less wheel slip.

Brake System Control Module Features

Brake Drying/Cleaning

Brake Drying/Cleaning autonomously applies a small amount of brake pressure during long driving on wet roads in order to remove water from the rotor surface. The brake application is unperceivable to the driver, but should result in improved brake feel and performance. Conditions to enable Brake Drying/Cleaning.

- Wipers need to be ON
- If Cruise is Active, Brake Drying/Cleaning will not function as minimum pedal position is required
- If driver brakes, the distance counter will be reset
- Brake pressure needs to build up to 3 bar at all 4 wheels

Hill Start Assist

Hill Start Assist is a feature that will temporarily hold the vehicle while on a grade. This feature will hold the vehicle 2-5 seconds after the driver has removed their foot from brake pedal and the vehicle is on a grade exceeding 7%. The design is to prevent the vehicle from rolling down the hill before the driver has an opportunity to apply accelerator pedal. The brakes will automatically release when the accelerator pedal is applied. It will not activate if the vehicle is in a drive gear and facing downhill, or if the vehicle is facing uphill and in Reverse.

Driveline Damping

Driveline Damping is required on vehicles with ESC, Stop/Start functionality and an automatic transmission. This feature holds brake pressure to dampen driveline acceleration disturbance as engine is restarted and holds brake pressure to retard or prevent the vehicle from rolling. It is used for driver comfort and has also been used to extend vehicle hold on a steep grade.

Extended Hold Hill Start Assist
Extended Hold Hill Start Assist will function the same as Hill Start Assist except there will be an indefinite vehicle hold instead of a temporary vehicle hold. The vehicle will be held by the Brake System Control Module for up to five minutes, and then will transfer the hold to Electronic Park Brake when necessary. This

feature is required for all Stop/Start variants to prevent vehicle rollback when the engine shuts off. All of the driver exit strategies of Hill Start Assist with Electronic Park Brake will also apply to this feature.

Hill Descent Control
Hill Descent Control provides autonomous braking when the vehicle is descending a very steep incline in either forward or reverse transmission gear. The grade activation minimum threshold is 10%. Typical vehicle speeds while using this feature are 5-30kph (6–19mph). This feature can provide convenience and comfort for steep offroad driving.

Hill Descent Control is enabled by the driver activating the Hill Descent Control switch at a vehicle speed below the maximum enabling vehicle speed.

Hill Descent Control is disabled if vehicle speed exceeds 60 km/h for 30 seconds or immediately if vehicle speed exceeds 80km/h. Cruise control will not be allowed to activate when Hill Descent Control is enabled by the driver.

Automatic Vehicle Hold
Automatic Vehicle Hold is a driver enabled feature that holds the vehicle at a standstill for an indefinite amount of time. This feature is similar to the Extended Hold Hill Start Assist except it will function on all road grades. It must be enabled by the driver and will revert to a disabled state upon key-up. The brake System Control Module will hold vehicle, then transfer hold to Electric Park Brake (EPB) when necessary.

The Automatic Vehicle function requires the vehicle to have an electronic parking brake which will allow the brake pressure hold time to increase up to 5 minutes before engaging the electronic park brake. Automatic Vehicle is available on vehicles with automatic transmissions and only available on vehicles with manual transmissions if equipped with a neutral gear position indicator (start/stop engines have neutral gear position indicator).

Vehicle Moding
The Brake System Control Module shall use ‘Driver Selected Mode Status signals to determine what mode the vehicle is in. The Brake System Control Module shall use the supported Driving modes to indicate to the customer what mode they are in. Mode 0 that is correspond to “ Tour or Normal” mode shall always be supported and will be considered the default. Other supported modes are: Sport, Offroad, Track, Snow/Ice and Tow Haul.

Electric Park Brake Features

Park Rollaway EPB Apply

This feature applies the EPB autonomously when vehicle motion is detected while in Park. The most likely scenario for activation of this feature is a vehicle on a split-mu grade and an open differential. The low mu wheel can spin in the opposite direction from the vehicle motion, and so the high mu wheel may allow the vehicle to roll. Applying the EPB to both rear wheels prevents vehicle motion by preventing the high mu wheels from rotating.

Steep Grade Apply:

This feature autonomously applies the EPB when the vehicle is on a steep grade. The Steep Grade apply can be enabled if Park Rollaway Detection apply is enabled. It can also be enabled on its own.

Interface with Other Features

The features set below are systems that will be controlled (to various degrees) by the Brake System Control Module by sending out performance requests to each system which should be arbitrated in the sub-system for execution. The idea is that the Brake System Control Module request should override normal sub-system control and these requests should not override diagnostic, failure, or other special or overriding control.

Steering Torque Overlay (for both ABS and TCS)

This feature provides haptic feedback by increasing or decreasing steering assist to encourage appropriate course correction. This feature functions in combination with ESC or ABS

4WD Interface

Brake Controls send front and rear torque requests to the transfer case system while ABS/TCS/ESC is activating.

4WD w/4Low Interface

Brake Controls send front and rear torque requests to the transfer case system while ABS/TCS/ESC is activating

Trailer Braking Control Interface

The Brake System Control Module shall be able to independently use the trailer brake activation request to stabilize and decelerate the vehicle**.** The Brake System Control Module can use Trailer Braking Force Output and Trailer Braking Gain Setting as feedback to know how much braking the Integrated Trailer Brake Control is currently doing

Dynamic Braking with EPB

Dynamic Braking with EPB provides autonomous braking when the EPB switch is pressed when the vehicle is in motion. With the use of this feature, if the EPB switch is pressed while the vehicle is moving, the Brake System Control Module will apply braking at all 4 corners until the vehicle is stopped, then the EPB will apply and Brake System Control Module will release pressure.

Electronic Transmission Range Select (ETRS) Autonomous Apply

This feature applies brake pressure on a request from ETRS. This is done temporarily until the EPB can apply, using the ETRS EPB Apply feature.

The Brake Control System shall provide a short service brake hold to prevent the vehicle from rolling between when the ETRS commands a hold and the electronic park brake is applied. The primary purpose of the ETRS/Brakes interface is to apply the park brake when ETRS has a failure that prevents the transmission from achieving park; or if the driver shifts to park on a grade, EPB will reduce the load on the park pawl by applying (ETRS calculates and calibrates this grade).

Disc Brakes

Schematic and Routing Diagrams

6613326

Disc Brake Schematics (Brake Pad Wear Sensors (JBK))

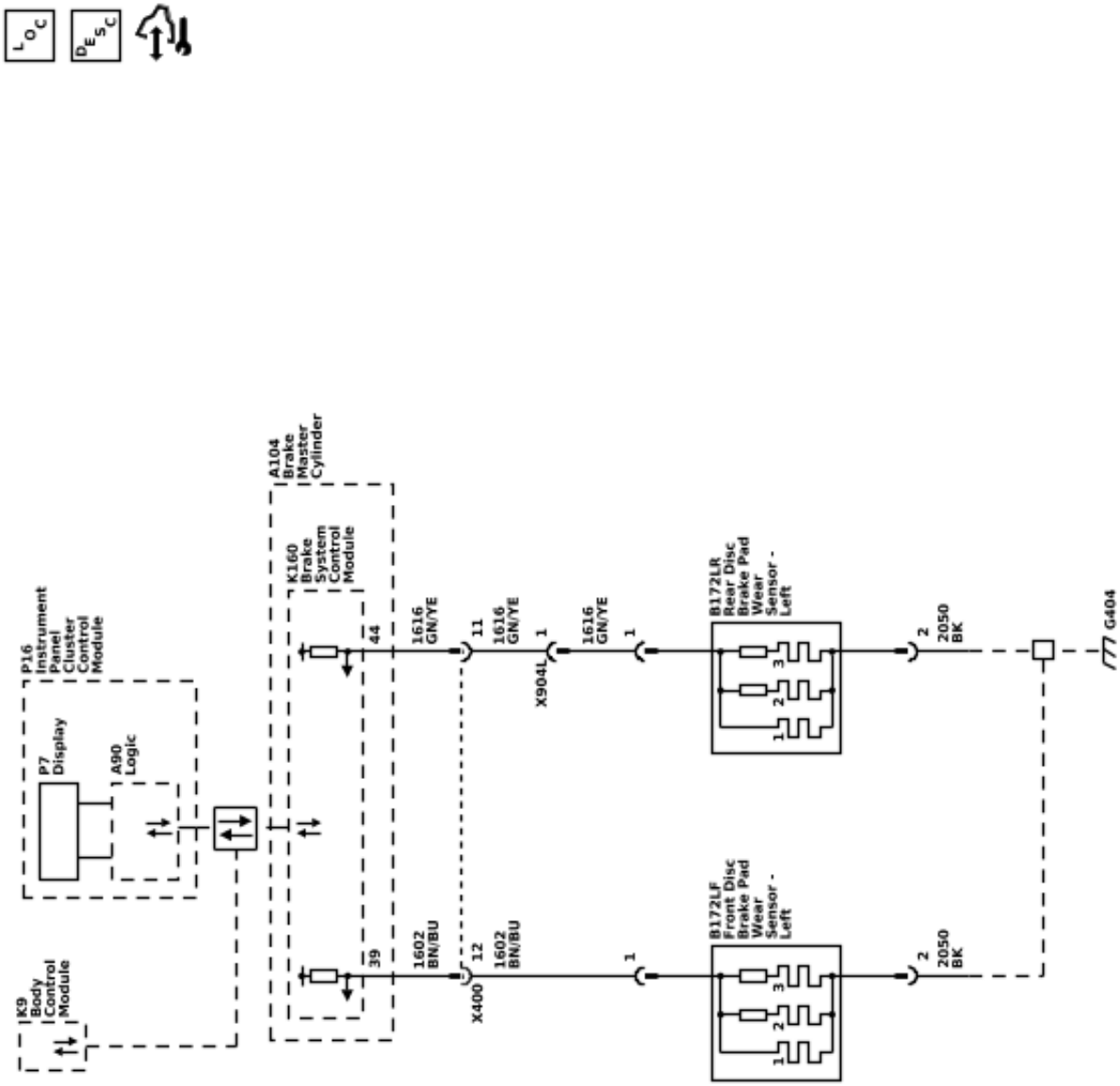

Description and Operation

Disc Brake System Description and Operation

System Component Description

The disc brake system consists of the following components:

Disc Brake Pads: Applies mechanical output force from the hydraulic brake calipers to friction surfaces of brake rotors.

Disc Brake Rotors: Uses mechanical output force applied to friction surfaces from the disc brake pads to slow speed of tire and wheel assembly rotation.

Disc Brake Pad Hardware: Secures disc brake pads firmly in proper relationship to the hydraulic brake calipers. Enables a sliding motion of brake pads when mechanical output force is applied.

Disc Brake Caliper Hardware (Floating Caliper): Provides mounting for hydraulic brake caliper and secures the caliper firmly in proper relationship to caliper bracket. Enables a sliding motion of the brake caliper to the brake pads when mechanical output force is applied.

System Operation (Floating Caliper)

Mechanical output force is applied from the hydraulic brake caliper pistons to the inner brake pads. As the pistons press the inner brake pads outward, the caliper housings draw the outer brake pads inward. This allows the output force to be equally distributed. The brake pads apply the output force to the friction surfaces on both sides of the brake rotors, which slows the rotation of the tire and wheel assemblies. The correct function of both the brake pad and brake caliper hardware is essential for even distribution of braking force.

System Operation (Fixed Caliper)

Mechanical output force is applied from the hydraulic brake caliper inboard and outboard pistons to the inner and outer brake pads. The brake calipers are a fixed, opposed-piston design, allowing the output force to be equally distributed through the distribution of the pressurized brake fluid within the caliper. The brake pads apply the output force to the friction surfaces on both sides of the brake rotors, which slows the rotation of the tire and wheel assemblies. The correct function of the brake pad hardware and of the brake caliper inboard and outboard pistons is essential for even distribution of braking force.

System Characteristics

Brake Noise

Brake noise can occur and to a degree, some brake noise is normal. Variations in driving conditions such as the weather, environment, driving patterns, differences in vehicle loading, and type or style of driving, can affect brake wear. Any one of these variations can cause brake noise to become apparent. Inspect and verify that all metal-to-metal contact areas of the brake pads, brake pad guides or springs, brake caliper housing, caliper bracket and/or suspension knuckle, as applicable, are clean and free of corrosion and scale.

Brake noise is a “slip-stick” vibration of disc brake components and, if it occurs intermittently, can be considered normal. Most brake noise may be eliminated or temporarily reduced by performing 3 or 4 aggressive brake applications. If the brake noise persists or consistently recurs, application of a damping compound to the brake pad mounting plate where it contacts the caliper can lessen the vibration as the components move relative to each other. Refer to [Link target (target-id 176959-) not found] in this section for recommended compounds.

The following brake noises are characteristic of all brake systems. These noises cannot be avoided, and may not indicate improper operation of the brake system.

Squeak/Squeal Noise

A squeak or squeal noise can occur on vehicles with front semi-metalic brake pads during light to medium brake pedal application at low to moderate vehicle speeds. Occasionally this noise may appear from the front or rear brakes after a period of non-use such as overnight, or cold brakes and/or in high humidity conditions.

Grinding Noise

Common occurrence for rear brakes and some front disc brakes during initial brake applications after the vehicle has been parked overnight. Caused by light corrosion forming on the metal brake component friction surfaces during vehicle non-use. Typically disappears after the first few brake applications.

Groan Noise

A groan type noise may be heard during a quick stop, or when slowly moving forward from a complete stop. On vehicles equipped with antilock brake systems (ABS), a groan or moan noise may occur during heavy brake application or on road surfaces with compromised traction such as loose gravel, or on wet or icy roads. This is a normal function of ABS activation.

Hydraulic Brakes

Schematic and Routing Diagrams

6613327

Hydraulic Brake Schematics (Hydraulic Brakes)

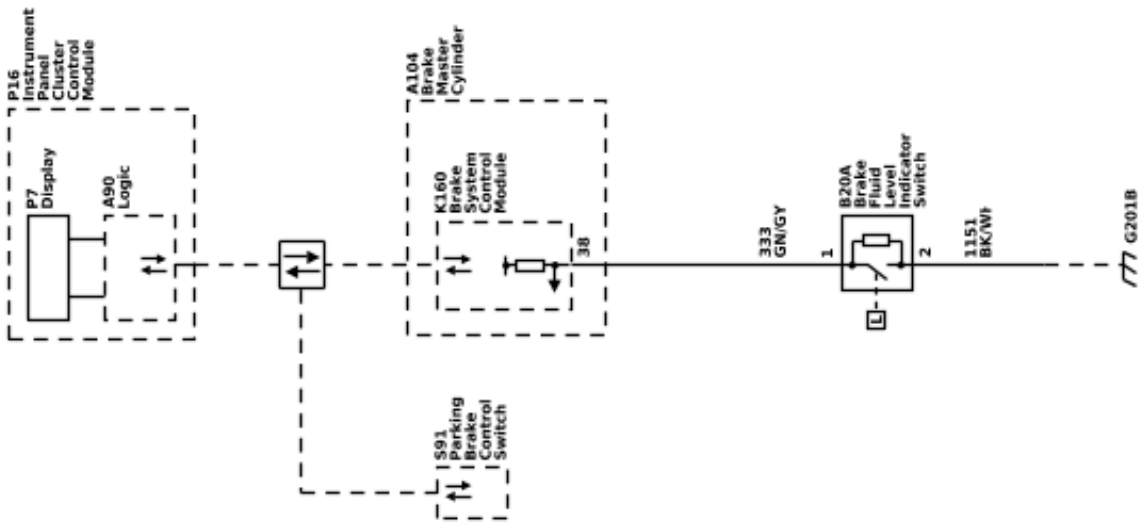

Description and Operation

Brake Assist System Description and Operation

System Component Description

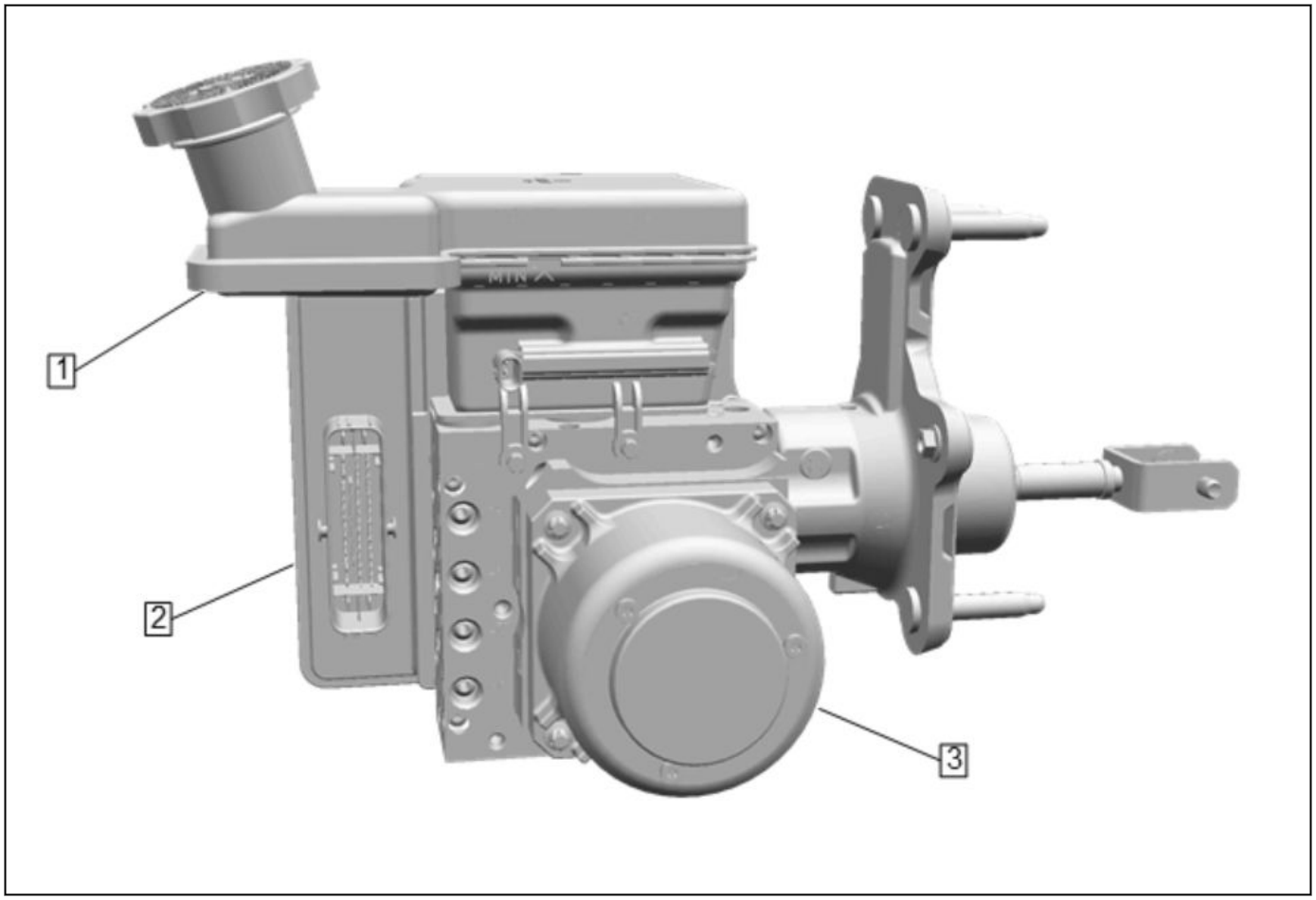

5039052

Note: The above graphic may not be an exact representation for every vehicle configuration.

The brake assist system is an electro - hydraulic brake booster that replaces a vacuum booster including its vacuum supply. The brake booster unit takes the driver applied brake demand and transforms this into an amplified brake pressure and does not rely on vacuum to function. The brake booster unit is designed to operate together with an electronic stability control module which is normally responsible for ABS, traction control and stability control.

The master cylinder and power brake booster unit consists of a brake master cylinder reservoir (1), an electronic brake booster control module (2), pedal coupling unit/pushrod, and the brake master cylinder (3) with integrated brake pressure modulator valve.

System Operation

Brake system input force is multiplied by the brake pedal and transferred by the pedal pushrod to the hydraulic brake master cylinder. Effort required to apply the brake system is reduced by the electronic brake booster.

Shutdown Test

The brake master cylinder performs a self-test 2 minutes after ignition off. The self-test consists of an internal hydraulic test of the brake master cylinder and an external hydraulic compliance test and hydraulic leak test of the brake lines and calipers. The brake master cylinder will take the appropriate actions based on the test results at the next startup. The self-test will not run again until the vehicle has been driven 0.804 Km (0.5 mile), 40.23 kph (25 mph) minimum.

Brake Assist System Description and Operation

Brake Assist Operating Mode	Description	Vehicle Braking Behavior	Vehicle Speed limited to XXX kph/mph	Red Brake Telltale	DIC	Other Displays
Full Brake Assist	• - Normal hydraulic brake assist. • - Brake pedal travel and force (pressure) measured. • - Pedal feel indicates the relation of the pedal travel to the pedal force. • - Brake system applies bra	• - Pedal feel: Normal (force to travel of brake pedal). • - Brake pedal effort to decel: Normal. • - Pedal Travel restricted to 80 mm due to pedal simulator.	No	No	None	None
Reduced Brake Assist	• - Normal hydraulic brake assist available • - Driver warned with DIC message but due to nature of failure, engineering determined more warning needed. • - Brake assist gain reduced in a noticeable fashion at low	• - Pedal feel: Normal • - Brake Pedal effort to decel: More effort required for low decel values (noticeable). Full braking capability for increased effort. • - Pedal Travel restricted to 80 mm due to pedal simulator.	No	No	Service Brake Assist	None

Brake Assist Operating Mode	Description	Vehicle Braking Behavior	Vehicle Speed limited to XXX kph/mph	Red Brake Telltale	DIC	Other Displays
Reduced Brake Assist	• - Normal hydraulic brake assist on 2 wheels. • - Performed when brake system detects and isolates a leak in one of the two brake circuits.	• - Pedal feel: Normal. • - Brake pedal effort to deceleration: Same deceleration requires double the effort. Can only achieve 50% deceleration. • - Vehicle will pull slightly to the side with the Front Brake active. • - Pedal Travel restricted to 80 mm due to pedal simulator.	Yes	Yes	Brake System Failure XXX kph/mph Top Speed Low Brake Fluid (Potentially)	ABS, ESC, and Engine Telltales Service Traction and ESC DIC Vehicle Speed Limited display from ECM

Brake Assist Operating Mode	Description	Vehicle Braking Behavior	Vehicle Speed limited to XXX kph/mph	Red Brake Telltale	DIC	Other Displays
Two Wheel Brake Assist	• - Normal hydraulic brake assist on 2 wheels. • - Performed when brake system detects and isolates a leak in one of the two brake circuits.	• - Pedal feel: Normal. • - Brake pedal effort to deceleration: Same deceleration requires double the effort. Can only achieve 50% deceleration. • - Vehicle will pull slightly to the side with the Front Brake active. • - Pedal Travel restricted to 80 mm due to pedal simulator.	Yes	Yes	Brake System Failure XXX kph/mph Top Speed Low Brake Fluid (Potentially)	ABS, ESC, and Engine Telltales Service Traction and ESC DIC Vehicle Speed Limited display from ECM

Brake Assist Operating Mode	Description	Vehicle Braking Behavior	Vehicle Speed limited to XXX kph/mph	Red Brake Telltale	DIC	Other Displays
No Brake Assist with Electric Park Brake Assist	• - Hydraulic brake assist not available. • - Brake System uses Electric Park Brake to assist driver braking.	• - Pedal feel: Slightly stiffer than normal. • - Brake pedal effort to deceleration: Onset of braking is similar but more force required to achieve same deceleration compared with Full Brake Assist. • - Minimal non linearities in deceleration due to use of Electric Park Brake. • -	Yes	Yes	Brake System Failure XXX kph/mph Top Speed	ABS, ESC, and Engine Telltales Service Traction and ESC DIC Vehicle Speed Limited display from ECM

Brake Assist Operating Mode	Description	Vehicle Braking Behavior	Vehicle Speed limited to XXX kph/mph	Red Brake Telltale	DIC	Other Displays
No Brake Assist (Push Thru)	• - No hydraulic or Electric Park brake assist available. • - Driver pedal force distributes equal pressure to all 4 wheels	• - Pedal feel: Slightly softer than normal. • - Brake pedal effort to deceleration: Onset of braking requires more travel AND more force required to achieve same deceleration compared with No Brake Assist with Electric Park Brake Assist. • - Pedal Travel's almost to the floor with high	Yes	Yes	Brake System Failure XXX kph/mph Top Speed (Not displayed for full power loss or critical micro failures)	ABS, ESC, and Engine Telltales Service Traction and ESC DIC Vehicle Speed Limited display from ECM

Brake Assist Operating Mode	Description	Vehicle Braking Behavior	Vehicle Speed limited to XXX kph/mph	Red Brake Telltale	DIC	Other Displays
Two Wheel No Brake Assist (2 Wheel Push Thru)	• - Hydraulic brake assist not available. • - Brake system applies and releases Electric Park Brake proportional to driver pedal force to assist driver braking.	• - Pedal feel: Significantly softer than normal. • - Brake Pedal effort to deceleration: Onset of braking requires more travel AND more force required to achieve same deceleration compared with No Brake Assist. • - Vehicle will pull slightly to the side with the Front Brake active.	Yes	Yes	Brake System Failure XXX kph/mph Top Speed	ABS, ESC, and Engine Telltales Service Traction and ESC DIC Vehicle Speed Limited display from ECM

Brake Assist Operating Mode	Description	Vehicle Braking Behavior	Vehicle Speed limited to XXX kph/mph	Red Brake Telltale	DIC	Other Displays
Brake Fade Detected Level 1	• - Normal hydraulic brake assist available. • - Brakes system estimates brake temps of 500 - 600 deg C. • - Driver warned with DIC display. • - Brake assist gain reduced in a noticeable fashion at low pedal travel	• - Pedal feel: Normal • - Brake Pedal effort to deceleration: Not significantly changed • - Pedal Travel restricted to 80 mm due to pedal simulator.	No	No	Reduce Braking to Avoid Overheating	None

Hydraulic Brake System Description and Operation

System Component Description

The hydraulic brake system consists of the following:

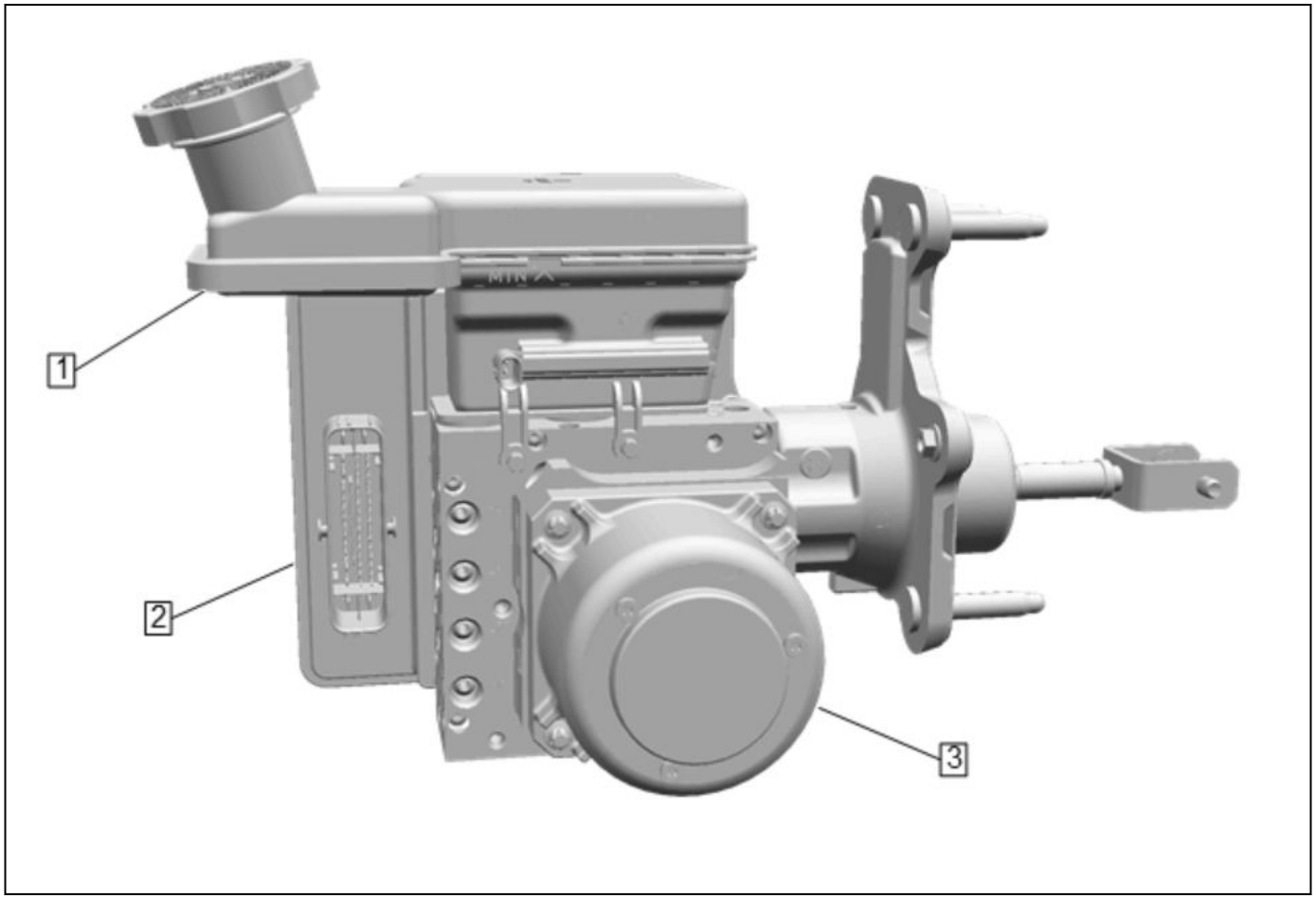

5039052

Note: The above graphic may not be an exact representation for every vehicle configuration.

Brake Master Cylinder Fluid Reservoir (1): Contains supply of brake fluid for the hydraulic brake system.

Electronic Brake Booster Control Module (2) and Brake Master Cylinder (3): The brake master cylinder and the electronic brake booster control module take the driver applied brake demand and transforms this into an amplified brake pressure. The integrated brake pressure modulator valve controls hydraulic pressure to each wheel independently and can be responsible for ABS, traction control, and stability control.

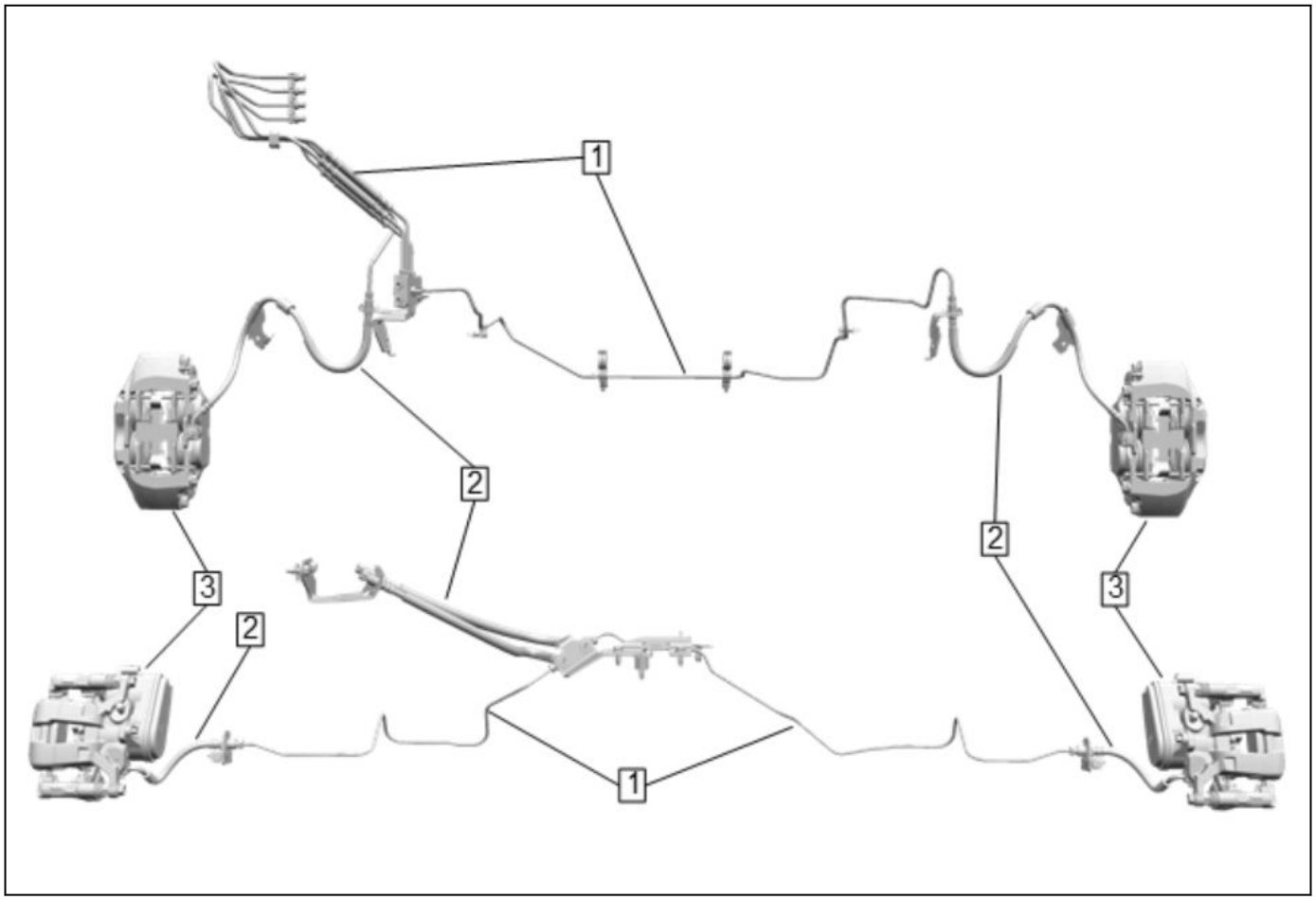

5039057

Note: The above graphic may not be an exact representation for every vehicle configuration.

Hydraulic Brake Pipes (1) and Flexible Brake Hoses (2): Carries brake fluid to and from hydraulic brake system components.

Brake Calipers (3): Converts hydraulic input pressure into mechanical output force.

System Operation

Mechanical force is converted into hydraulic pressure by the master cylinder, regulated to meet braking system demands by the pressure balance control system, and delivered to the hydraulic brake wheel circuits by the pipes and flexible hoses. The wheel apply components then convert the hydraulic pressure back into mechanical force which presses linings against rotating brake system components.

Section 2

Diagnostic Overview, Starting Point, and Programming

Programming and Setup **2-4**
Diagnostic Information and Procedures **2-4**
Control Module References 2-4
Repair Instructions **2-7**
A11 Radio: Programming and Setup 2-7
B174W Front View Camera - Windshield: Programming and Setup 2-11
B218L Side Obstacle Detection Control Module - Left: Programming and Setup 2-12
B218R Side Obstacle Detection Control Module - Right: Programming and Setup 2-13
B233B Forward Range Radar Sensor - Long Range: Programming and Setup 2-14
B233LF Short Range Radar Sensor - Left Front: Programming and Setup 2-15
B233LR Short Range Radar Sensor - Left Rear: Programming and Setup 2-15
B233RF Short Range Radar Sensor - Right Front: Programming and Setup 2-16
B233RR Short Range Radar Sensor - Right Rear: Programming and Setup 2-17
B233SL Short Range Radar Rear Side Sensor - Left: Programming and Setup 2-18
B233SR Short Range Radar Rear Side Sensor - Right: Programming and Setup 2-19
K4 Assist Step Control Module: Programming and Setup 2-19
K5 Automatic Level Control Module: Programming and Setup 2-20
K9 Body Control Module: Programming and Setup 2-21
K19 Suspension Control Module: Programming and Setup 2-23
K20 Engine Control Module: Programming and Setup 2-24
K212 Gear Shift Control Module: Programming and Setup 2-26
K219 Lighting Control Module: Programming and Setup 2-26
K29FV Front Seat Heater Vent Control Module: Programming and Setup 2-28
K29RV Rear Seat Heater Vent Control Module: Programming and Setup 2-28
K36 Restraints Control Module: Programming and Setup 2-28
K38 Chassis Control Module: Programming and Setup 2-30
K40D Driver Seat Adjuster Memory Module: Programming and Setup 2-30
K40P Passenger Seat Adjuster Memory Module: Programming and Setup 2-31
K43 Power Steering Control Module: Programming and Setup 2-32
K56 Serial Data Gateway Module: Programming and Setup 2-33
K56U Special Purpose Vehicle Module: Programming and Setup 2-35
K60 Column Lock Module: Programming and Setup 2-35
K61 Sunroof Control Module: Programming and Setup 2-37
K67 Trailer Brake Control Module: Programming and Setup 2-37
K68 Trailer Lighting Control Module: Programming and Setup 2-37
K69 Transfer Case Control Module: Programming and Setup 2-37

K71 Transmission Control Module: Programming and Setup (10L80 (MHS, MQC)) 2-38
K73 Telematic Control Module: Programming and Setup (UDA) 2-40
K73 Telematic Control Module: Programming and Setup (UE1) 2-40
K85P Restraints Occupant Classification System Module - Passenger: Programming and Setup 2-42
K99 Steering Column Control Module: Programming and Setup 2-44
K124 Image Processing Module: Programming and Setup (without UKL) 2-44
K124 Image Processing Module: Programming and Setup 2-45
K160 Brake System Control Module: Programming and Setup 2-45
K164 Differential Control Module: Programming and Setup 2-47
K175 Center Console Compartment Cooler Control Module: Programming and Setup 2-48
K180 Driver Monitoring System Control Module: Programming and Setup 2-49
K182 Parking Assist Control Module: Programming and Setup (UD5 without 00Z) 2-49
K182 Parking Assist Control Module: Programming and Setup (UD5 with 00Z) 2-51
K183 UHF Short Range Low Energy Remote Control Access Transceiver: Programming and Setup 2-51
K194 Rear Gate Module: Programming and Setup 2-52
K299R Audio/Video Interface Rear Module: Programming and Setup 2-53
K313 Interior Object Detection Module: Programming and Setup 2-54
P16 Instrument Panel Cluster Control Module: Programming and Setup 2-56
T1 Accessory AC and DC Power Control Module: Programming and Setup 2-58
T3 Audio Amplifier: Programming and Setup 2-58
T22 Wireless Accessory Charging Module: Programming and Setup 2-59
K111 Fuel Pump Power Control Module: Programming and Setup 2-59
Serial Data Authentication Configuration 2-59
Service Programming System (SPS) 2-60
Q77 Transmission Control Solenoid Valve Characterization Programming 2-61
Vehicle Wide Programming and Setup 2-62
Description and Operation 2-70
Over The Air Description and Operation 2-70
Special Tools and Equipment 2-72
Special Tools 2-72
Vehicle Diagnostic Information 2-74
Specifications 2-74
A11 Radio: Scan Tool Information 2-74
B174W Front View Camera - Windshield: Scan Tool Information (with UGN) 2-77
B174W Front View Camera - Windshield: Scan Tool Information (without UGN) 2-78
B218L Side Obstacle Detection Control Module - Left: Scan Tool Information 2-78
B218R Side Obstacle Detection Control Module - Right: Scan Tool Information 2-79
B233B Forward Range Radar Sensor - Long Range: Scan Tool Information 2-80
B233LF Short Range Radar Sensor - Left Front: Scan Tool Information 2-81
B233LR Short Range Radar Sensor - Left Rear: Scan Tool Information 2-81
B233RF Short Range Radar Sensor - Right Front: Scan Tool Information 2-82
B233RR Short Range Radar Sensor - Right Rear: Scan Tool Information 2-82
B233SL Short Range Radar Rear Side Sensor - Left: Scan Tool Information 2-83
B233SR Short Range Radar Rear Side Sensor - Right: Scan Tool Information 2-84
K4 Assist Step Control Module: Scan Tool Information 2-84

K5 Automatic Level Control Module: Scan Tool Information 2-85
K9 Body Control Module: Scan Tool Information 2-87
K19 Suspension Control Module: Scan Tool Information 2-127
K20 Engine Control Module: Scan Tool Information 2-127
K20 Engine Control Module: Scan Tool Information 2-160
K219 Lighting Control Module: Scan Tool Information 2-224
K29FV Front Seat Heater Vent Control Module: Scan Tool Information 2-226
K29RV Rear Seat Heater Vent Control Module: Scan Tool Information 2-228
K36 Restraints Control Module: Scan Tool Information 2-229
K38 Chassis Control Module: Scan Tool Information 2-232
K40D Driver Seat Adjuster Memory Module: Scan Tool Information 2-239
K40P Passenger Seat Adjuster Memory Module: Scan Tool Information 2-242
K43 Power Steering Control Module: Scan Tool Information 2-244
K60 Column Lock Module: Scan Tool Information 2-246
K68 Trailer Lighting Control Module: Scan Tool Information 2-247
K69 Transfer Case Control Module: Scan Tool Information 2-247
K71 Transmission Control Module: Scan Tool Information (10L80 (MHS, MQC)) 2-252
K73 Telematic Control Module: Scan Tool Information 2-258
K85P Restraints Occupant Classification System Module - Passenger: Scan Tool Information 2-260
K124 Image Processing Module: Scan Tool Information (UGN) 2-261
K124 Image Processing Module: Scan Tool Information (UKL) 2-265
K160 Brake System Control Module: Scan Tool Information 2-268
K164 Differential Control Module: Scan Tool Information 2-275
K180 Driver Monitoring System Control Module: Scan Tool Information 2-278
K182 Parking Assist Control Module: Scan Tool Information 2-278
K183 UHF Short Range Low Energy Remote Control Access Transceiver: Scan Tool Information 2-282
K194 Rear Gate Module: Scan Tool Information 2-283
K299R Audio/Video Interface Rear Module: Scan Tool Information 2-283
P16 Instrument Panel Cluster Control Module: Scan Tool Information 2-284
T3 Audio Amplifier: Scan Tool Information 2-285
T22 Wireless Accessory Charging Module: Scan Tool Information 2-286
K111 Fuel Pump Power Control Module Scan Tool Information 2-286

Diagnostic Information and Procedures 2-286

Strategy Based Diagnosis 2-286
Diagnostic Procedure Instructions 2-288
Diagnostic System Check Instructions 2-290
Diagnostic Starting Point - Vehicle 2-296
Diagnostic System Check - Vehicle 2-296
DTC Status Information 2-299
Powertrain Diagnostic Trouble Code (DTC) Type Definitions 2-300
Diagnostic Trouble Code (DTC) List - Vehicle 2-301
Symptom Byte List 2-364
Symptoms - Vehicle 2-374
Engine Does Not Crank 2-375
Engine Cranks But Does Not Run 2-375
Inspection/Maintenance System Check 2-375
Diagnostic Repair Verification 2-375
Proactive Alerts List 2-376

Description and Operation 2-376

Proactive Alerts Description and Operation 2-376

Diagnostic Overview, Starting Point, and Programming

Programming and Setup

Diagnostic Information and Procedures

Control Module References

Reference Information

- [Link target (target-id 148085-) not found]
- Diagnostic System Check - Vehicle 2-296
- Diagnostic Trouble Code (DTC) List - Vehicle 2-301
- Symptoms - Vehicle 2-374

Control Module References

Code	Control Module/Scan Tool Information	Schematic	Repair Instruction	Programming and Setup
A11	A11 Radio: Scan Tool Information 2-74	Radio/Navigation System Schematics 3-3	[Link target (target-id 46758-) not found]	A11 Radio: Programming and Setup 2-7
B174W	B174W Front View Camera - Windshield: Scan Tool Information (without UGN) 2-78 B174W Front View Camera - Windshield: Scan Tool Information (with UGN) 2-77	Driver Assistance Systems Schematics 7-4	[Link target (target-id 283748-) not found]	B174W Front View Camera - Windshield: Programming and Setup 2-11
B218L/R	B218L Side Obstacle Detection Control Module - Left: Scan Tool Information 2-78 B218R Side Obstacle Detection Control Module - Right: Scan Tool Information 2-79	Driver Assistance Systems Schematics 7-4	[Link target (target-id 283745-) not found]	B218L Side Obstacle Detection Control Module - Left: Programming and Setup 2-12 B218R Side Obstacle Detection Control Module - Right: Programming and Setup 2-13
B233B	B233B Forward Range Radar Sensor - Long Range: Scan Tool Information 2-80	Driver Assistance Systems Schematics 7-4	[Link target (target-id 283757-) not found]	B233B Forward Range Radar Sensor - Long Range: Programming and Setup 2-14
B233LF/RF	B233LF Short Range Radar Sensor - Left Front: Scan Tool Information 2-81 B233RF Short Range Radar Sensor - Right Front: Scan Tool Information 2-82	Driver Assistance Systems Schematics 7-4	[Link target (target-id 309279-) not found]	B233LF Short Range Radar Sensor - Left Front: Programming and Setup 2-15 B233RF Short Range Radar Sensor - Right Front: Programming and Setup 2-16
B233LR/RR	B233LR Short Range Radar Sensor - Left Rear: Scan Tool Information 2-81 B233RR Short Range Radar Sensor - Right Rear: Scan Tool Information 2-82	Driver Assistance Systems Schematics 7-4	[Link target (target-id 320874-) not found]	B233LR Short Range Radar Sensor - Left Rear: Programming and Setup 2-15 B233RR Short Range Radar Sensor - Right Rear: Programming and Setup 2-17

Code	Control Module/Scan Tool Information	Schematic	Repair Instruction	Programming and Setup
B233SL/SR	B233SL Short Range Radar Rear Side Sensor - Left: Scan Tool Information 2-83 B233SR Short Range Radar Rear Side Sensor - Right: Scan Tool Information 2-84	Driver Assistance Systems Schematics 7-4	[Link target (target-id 320874-) not found]	B233SL Short Range Radar Rear Side Sensor - Left: Programming and Setup 2-18 B233SR Short Range Radar Rear Side Sensor - Right: Programming and Setup 2-19
K4	K4 Assist Step Control Module: Scan Tool Information 2-84	[Link target (target-id 145954-) not found]	[Link target (target-id 258421-) not found]	K4 Assist Step Control Module: Programming and Setup 2-19
K5	K5 Automatic Level Control Module: Scan Tool Information 2-85	[Link target (target-id 156654-) not found]	[Link target (target-id 329298-) not found]	K5 Automatic Level Control Module: Programming and Setup 2-20
K9	K9 Body Control Module: Scan Tool Information 2-87	Body Control System Schematics 6-28	[Link target (target-id 148090-) not found]	K9 Body Control Module: Programming and Setup 2-21
K19	K19 Suspension Control Module: Scan Tool Information 2-127	[Link target (target-id 156654-) not found]	[Link target (target-id 56243-) not found]	K19 Suspension Control Module: Programming and Setup 2-23
K20	K20 Engine Control Module: Scan Tool Information 2-127 K20 Engine Control Module: Scan Tool Information 2-160	[Link target (target-id 307666-) not found] – 3.0L (LZ0) Diesel engine [Link target (target-id 227956-) not found] – 5.3L (L84) or 6.2L (L87) engine	[Link target (target-id 307247-) not found] – 3.0L (LZ0 Diesel engine [Link target (target-id 227993-) not found] – 5.3L (L84) or 6.2L (L87) engine	K20 Engine Control Module: Programming and Setup 2-24
K29FV/RV	• K29FV Front Seat Heater Vent Control Module: Scan Tool Information 2-226 • K29RV Rear Seat Heater Vent Control Module: Scan Tool Information 2-228	Heated/Cooled Seat Schematics 8-21	[Link target (target-id 271038-) not found] [Link target (target-id 327143-) not found]	• K29FV Front Seat Heater Vent Control Module: Programming and Setup 2-28 • K29RV Rear Seat Heater Vent Control Module: Programming and Setup 2-28
K36	K36 Restraints Control Module: Scan Tool Information 2-229	SIR Schematics 7-75	[Link target (target-id 57768-) not found]	K36 Restraints Control Module: Programming and Setup 2-28
K38	K38 Chassis Control Module: Scan Tool Information 2-232	[Link target (target-id 150336-) not found]	[Link target (target-id 345039-) not found]	K38 Chassis Control Module: Programming and Setup 2-30
K40	K40D Driver Seat Adjuster Memory Module: Scan Tool Information 2-239 K40P Passenger Seat Adjuster Memory Module: Scan Tool Information 2-242	Driver Seat Schematics 8-3 Passenger Seat Schematics 8-7	[Link target (target-id 168604-) not found]	K40D Driver Seat Adjuster Memory Module: Programming and Setup 2-30 K40P Passenger Seat Adjuster Memory Module: Programming and Setup 2-31
K43	K43 Power Steering Control Module: Scan Tool Information 2-244	Power Steering Schematics 9-3	[Link target (target-id 119400-) not found]	K43 Power Steering Control Module: Programming and Setup 2-32
K56	Serial Data Gateway Module	Data Communication Schematics 6-3	[Link target (target-id 148099-) not found]	K56 Serial Data Gateway Module: Programming and Setup 2-33

Code	Control Module/Scan Tool Information	Schematic	Repair Instruction	Programming and Setup
K56U	Special Purpose Vehicle Module	*Upfitter Provision Schematics 6-906*	[Link target (target-id 351765-) not found]	*K56U Special Purpose Vehicle Module: Programming and Setup 2-35*
K60	*K60 Column Lock Module: Scan Tool Information 2-246*	*Column Lock Schematics 9-8*	[Link target (target-id 129581-) not found]	*K60 Column Lock Module: Programming and Setup 2-35*
K61	Sunroof Control Module	[Link target (target-id 56549-) not found]	[Link target (target-id 69302-) not found]	*K61 Sunroof Control Module: Programming and Setup 2-37*
K67	Trailer Brake Control Module	*Trailering Systems Schematics 0-53*	[Link target (target-id 327489-) not found]	*K67 Trailer Brake Control Module: Programming and Setup 2-37*
K68	*K68 Trailer Lighting Control Module: Scan Tool Information 2-247*	*Trailering Systems Schematics 0-53*	[Link target (target-id 327487-) not found]	*K68 Trailer Lighting Control Module: Programming and Setup 2-37*
K69	*K69 Transfer Case Control Module: Scan Tool Information 2-247*	• *Transfer Case Control Schematics 10-12* – MP 3015 (NP0) transfer case • *Transfer Case Control Schematics 10-26* – MP 3025 (NQH) transfer case	[Link target (target-id 192307-) not found] – MP 3015 (NP0) transfer case [Link target (target-id 162319-) not found] – MP 3025 (NQH) transfer case	*K69 Transfer Case Control Module: Programming and Setup 2-37*
K71	*K71 Transmission Control Module: Scan Tool Information (10L80 (MHS, MQC)) 2-252*	*Automatic Transmission Controls Schematics 10-3*	[Link target (target-id 284331-) not found]	*K71 Transmission Control Module: Programming and Setup (10L80 (MHS, MQC)) 2-38*
K73	*K73 Telematic Control Module: Scan Tool Information 2-258*	*OnStar/Telematics Schematics 3-15*	[Link target (target-id 328020-) not found]	*K73 Telematic Control Module: Programming and Setup (UDA) 2-40* *K73 Telematic Control Module: Programming and Setup (UE1) 2-40*
K85P	*K85P Restraints Occupant Classification System Module - Passenger: Scan Tool Information 2-260*	*SIR Schematics 7-75*	[Link target (target-id 188211-) not found]	*K85P Restraints Occupant Classification System Module - Passenger: Programming and Setup 2-42*
K99	Steering Column Control Module	*Tilt/Telescoping Steering Column Schematics 9-9*	[Link target (target-id 59054-) not found]	*K99 Steering Column Control Module: Programming and Setup 2-44*
K111	*K111 Fuel Pump Power Control Module Scan Tool Information 2-286*	[Link target (target-id 307666-) not found] – 3.0L (LZ0) Diesel engine [Link target (target-id 227956-) not found] – 5.3L (L84) or 6.2L (L87) engine	[Link target (target-id 307189-) not found] – 3.0L (LZ0) Diesel engine [Link target (target-id 228095-) not found] – 5.3L (L84) or 6.2L (L87) engine	*K111 Fuel Pump Power Control Module: Programming and Setup 2-59*
K124	*K124 Image Processing Module: Scan Tool Information (UGN) 2-261* *K124 Image Processing Module: Scan Tool Information (UKL) 2-265*	*Driver Assistance Systems Schematics 7-4*	[Link target (target-id 335121-) not found]	*K124 Image Processing Module: Programming and Setup (without UKL) 2-44* *K124 Image Processing Module: Programming and Setup 2-45*

Code	Control Module/Scan Tool Information	Schematic	Repair Instruction	Programming and Setup
K160	K160 Brake System Control Module: Scan Tool Information 2-268	Antilock Brake System Schematics 1-3	[Link target (target-id 324093-) not found]	K160 Brake System Control Module: Programming and Setup 2-45
K164	K164 Differential Control Module: Scan Tool Information 2-275	[Link target (target-id 150336-) not found]	[Link target (target-id 161390-) not found]	K164 Differential Control Module: Programming and Setup 2-47
K175	Center Console Compartment Cooler Control Module	[Link target (target-id 224783-) not found]	[Link target (target-id 329877-) not found]	K175 Center Console Compartment Cooler Control Module: Programming and Setup 2-48
K182	K182 Parking Assist Control Module: Scan Tool Information 2-278	Parking Assistance Systems Schematics 7-48	[Link target (target-id 283577-) not found]	K182 Parking Assist Control Module: Programming and Setup (UD5 without 00Z) 2-49 K182 Parking Assist Control Module: Programming and Setup (UD5 with 00Z) 2-51
K183	K183 UHF Short Range Low Energy Remote Control Access Transceiver: Scan Tool Information 2-282	Remote Function Schematics 7-58	[Link target (target-id 282270-) not found]	K183 UHF Short Range Low Energy Remote Control Access Transceiver: Programming and Setup 2-51
K194	K194 Rear Gate Module: Scan Tool Information 2-283	Liftgate Schematics 0-76	[Link target (target-id 162445-) not found]	K194 Rear Gate Module: Programming and Setup 2-52
K212	Gear Shift Control Module	Electronic Transmission Range Selector Schematics 10-9	[Link target (target-id 335605-) not found]	K212 Gear Shift Control Module: Programming and Setup 2-26
K219	K219 Lighting Control Module: Scan Tool Information 2-224	Exterior Lights Schematics 0-17	[Link target (target-id 321424-) not found]	K219 Lighting Control Module: Programming and Setup 2-26
K299	K299R Audio/Video Interface Rear Module: Scan Tool Information 2-283	Video System Schematics 3-17	[Link target (target-id 355842-) not found]	K299R Audio/Video Interface Rear Module: Programming and Setup 2-53
P16	P16 Instrument Panel Cluster Control Module: Scan Tool Information 2-284	Instrument Cluster Schematics 3-37	[Link target (target-id 349902-) not found]	P16 Instrument Panel Cluster Control Module: Programming and Setup 2-56
T1	Accessory AC and DC Power Control Module	Cigar Lighter/Power Outlet Schematics 6-811	[Link target (target-id 121154-) not found]	T1 Accessory AC and DC Power Control Module: Programming and Setup 2-58
T3	T3 Audio Amplifier: Scan Tool Information 2-285	Radio/Navigation System Schematics 3-3	[Link target (target-id 46705-) not found]	T3 Audio Amplifier: Programming and Setup 2-58
T22	T22 Wireless Accessory Charging Module: Scan Tool Information 2-286	Cigar Lighter/Power Outlet Schematics 6-811	[Link target (target-id 343743-) not found]	T22 Wireless Accessory Charging Module: Programming and Setup 2-59

Repair Instructions

A11 Radio: Programming and Setup

Note:

- DO NOT program a control module unless directed to by a service procedure or a service bulletin. If the control module is not properly configured with the correct calibration software, the control module will not control all of the vehicle features properly.

- Ensure the programming tool is equipped with the latest software and is securely connected to the data link connector. If there is an interruption during programming, programming failure or control module damage may occur.
- Stable battery voltage is critical during programming. Any fluctuation, spiking, over voltage or loss of voltage will interrupt programming. Check the 12 volt battery with a digital multimeter and insure the voltage is above 12.5 volts. Install a battery maintainer or power supply that provides a steady and stable voltage. Do not use a battery charger, as charging voltage will often fluctuate when connected to the vehicle. This may interrupt programing. If a battery maintainer is not available, connect a fully charged 12 V jumper or booster pack disconnected from the AC voltage supply.
- Turn OFF or disable systems that may put a load on the vehicles battery such as; interior lights, exterior lights (including daytime running lights), HVAC, radio, etc.
- Programming must begin with the Ignition/Vehicle OFF. Programming will direct the appropriate control module(s) to change power mode as needed during the procedure, independent of the vehicle's power mode.
- Clear DTCs after programming is complete. Clearing powertrain DTCs will set the Inspection/ Maintenance (I/M) system status indicators to NO.

Diagnostic Aids

- Check for Preliminary information or Technical Service bulletins before programming.
- During programming you may be required to select multiple calibrations dependent upon vehicle equipment. Have the vehicle build/RPO information available during the following procedure to ensure the correct calibrations are selected.
- If the control module calibration is only being updated, USB programming may not be required, depending on the current software level, or the release of updates. If USB programming may not be required when replacing/reprogramming the control module. If USB files for the application are not available via SPS, or have not been received from General Motors in another manner, the USB process will not need to be performed unless instructed otherwise in a service document or publication.
- Begin with the vehicle in the vehicle OFF power mode. The Service Programming System will power mode the vehicle.
- The vehicle can be moved to an alternate location when performing the USB portion of the programming steps which could allow the possibility of working on another vehicle while the USB programming event is taking place.
- When transferring a large file (>1GB) from the Techline Connect server to the PC then to a USB stick, below are some useful tips:
  - A wired connection to the network is the quickest, most stable way to download the file.
  - Wireless connections can be used, however slower connection speeds may increase the likelihood of errors to occur during file download.
  - Once the file is downloaded to the PC, it will reside in cache unless the cache is cleared. Any additional USB sticks made from that PC will be copied from cache and take a much shorter time compared to downloading from the server.
  - Never take a USB stick directly to a vehicle for updating without starting a Techline Connect session for that particular VIN. If software is already on the stick, Techline Connect will take only seconds to confirm software on the stick is the latest and correct for that vehicle. Failure to perform this step will result in no warranty claim code indicating a USB programming event was completed.
- The display may go black several times during the programming event.

Reference Information

Special Tools

- Use a USB C type flash drive for the vehicle, it is not recommended to use an adapter as this may cause the programming event to fail.
- USB 3.0 & above with NTFS format.
- Minimum size 32GB.
- EL-52100 Multiple Diagnostic Interface 2 (MDI 2)

For equivalent regional tools, refer to *Special Tools 2-72*.

Reprogram Control Module

To program an existing control module, perform the following procedure:

Note: The vehicle must remain in PARK and the driver's door closed during the programming procedure.

1. Before proceeding with Prepare for USB File Transfer in SPS check for any Info Sys OTA updates under Settings>Updates on the vehicles infotainment screen. If an update is available, it is more efficient to install the OTA update if it will install successfully. If the OTA will not install and

USB programming is necessary then before attempting USB programming you should first decline the update by selecting Details and then the Decline Update option, followed by confirming the Decline Update. If an Info Sys OTA update is not available, proceed with USB programming.

Note: For instructions on passive power moding, refer to *Power Mode Description and Operation 6-922*

2. Ignition/vehicle OFF
3. On the SPS Supported Controllers screen, select A11 Radio – Prepare for USB File Transfer and follow the on–screen instructions.
4. Connect a USB drive to the computer.
5. Perform a Quick Format on the USB drive to NTFS.

Note: If USB File Transfer is blocked, the software is the latest version. Programming is complete. Proceed to step 16

6. On the SPS Supported Controllers screen, select A11 Radio – USB File Transfer and follow the on–screen instructions.
7. Upon completion of the file transfer, properly eject the USB drive from the computer.
8. Ignition ON, infotainment system ON

Note: This step is not required and only needed when the radio screen is blank and monitoring USB update status is desired.

9. On the SPS Supported Controllers screen, select A11 Radio – USB File Download Status. This shows the status of the USB update on the SPS screen as the radio screen may go black during the update process.
10. Connect the USB drive to the USB port in the vehicle.
11. The infotainment system will recognize that update files are available. Follow the infotainment display on-screen instructions and select Update when prompted. If no instructions immediately appear on the infotainment display, select the following menu options:
    - Home
    - Settings
    - System
    - Updates

Note:

- If you receive an Update Failed screen, remove the USB, turn the vehicle OFF, and return to step 8. The update should continue where it stopped.
- The radio may display “Recovery Mode. Please Calibrate Device.”

12. Upon completion of programming, remove the USB drive.

Note: Programming Part 1 will reboot the radio and automatically turn the vehicle OFF.

13. On the SPS Supported Controllers screen, select A11 Radio – Programming Part 1 and then follow the on-screen instructions.

Note: Programming Part 2 will automatically turn the vehicle OFF.

14. On the SPS Supported Controllers screen, select A11 Radio – Programming Part 2 and then follow the on-screen instructions.
15. Return to step 2 to continue updating the radio until step 6 on-screen instruction blocks USB File Transfer
16. Clear DTCs.
17. Ignition OFF, Retained Accessory Power (RAP) OFF, remove the key fob from range of the vehicle, and let the vehicle sit for five minutes. Retest system operation to verify the repair.

Replace and Program Control Module

To program a replacement control module, perform the following procedure:

Note: The vehicle must remain in PARK and the driver’s door closed during the programming procedure.

Note: For instructions on passive power moding, refer to *Power Mode Description and Operation 6-922*

1. Ignition/vehicle OFF
2. On the SPS Supported Controllers screen, select A11 Radio – Prepare for USB File Transfer and follow the on–screen instructions.
3. Perform the Serial Data Authentication Configuration.
4. Connect a USB drive to the computer.
5. Perform a Quick Format on the USB drive to NTFS.

Note: If USB File Transfer is blocked, the software is the latest version. Programming is complete. Proceed to step 15

6. On the SPS Supported Controllers screen, select A11 Radio – USB File Transfer and follow the on–screen instructions.
7. Upon completion of the file transfer, properly eject the USB drive from the computer.
8. Ignition ON, infotainment system ON

Note: This step is not required and only needed when the radio screen is blank and monitoring USB update status is desired.

9. On the SPS Supported Controllers screen, select A11 Radio – USB File Download Status. This shows the status of the USB update on the SPS screen as the radio screen may go black during the update process.
10. Connect the USB drive to the USB port in the vehicle.
11. The infotainment system will recognize that update files are available. Follow the infotainment display on-screen instructions and select Update when prompted. If no instructions immediately appear on the infotainment display, select the following menu options:
    - Home
    - Settings
    - System
    - Updates

Note:
- If you receive an Update Failed screen, remove the USB, turn the vehicle OFF, and return to step 8. The update should continue where it stopped.
- The radio may display “Recovery Mode. Please Calibrate Device.”

12. Upon completion of programming, remove the USB drive.

Note: Programming Part 1 will reboot the radio and automatically turn the vehicle OFF.

13. On the SPS Supported Controllers screen, select A11 Radio – Programming Part 1 and then follow the on-screen instructions.

Note: Programming Part 2 will automatically turn the vehicle OFF.

14. On the SPS Supported Controllers screen, select A11 Radio – Programming Part 2 and then follow the on-screen instructions.
15. Return to step 1 to continue updating the radio until step 5 on-screen instruction blocks USB File Transfer

Note: If Setup fails, check for DTC U1962. If this DTC is set, perform the Serial Data Authentication Configuration. Then clear the DTC and repeat step 12.

16. On the SPS Supported Controllers screen, select A11 Radio – Setup and then follow the on-screen instructions.
17. Clear DTCs.
18. Ignition OFF, Retained Accessory Power (RAP) OFF, remove the key fob from range of the vehicle, and let the vehicle sit for five minutes. Retest system operation to verify the repair.

XM Activation (If Equipped)

Important: On the radio being replaced, record the XM ID from the radio parts label or before removal tune to XM channel 0. This will be used during the call to XM radio to deactivate the receiver that has been removed from the vehicle.

1. Turn the replacement radio ON, tune to the XM channel 0, and record the radio ID. The radio ID will be needed for activation of the receiver.
2. Contact SiriusXM Dealer Support at (800) 852–9696 to activate the new receiver.
3. Park the vehicle outside in an area with an unobstructed view of the southern sky.
4. Leave the vehicle outside with the ignition switch in the ACC position and the radio on for 30 minutes to activate XM service.
5. Once activated, the radio will receive the remaining XM channels.

Unsuccessful Programming Recovery

Note:
- Ensure the *EL-52100* (MDI 2) is used when programming the vehicle. Using the EL-47955 (MDI) will result in a programming failure.
- It may be necessary to use another *EL-52100* (MDI 2) and/or cables to verify proper operation to eliminate the possibility of faulty equipment.
- If Ethernet programming fails, ensure there is no fault in the Ethernet circuits between the X84 Data Link Connector and K56 Serial Data Gateway Module. Refer to [Link target (target-id 300812-) not found] to diagnose these Ethernet circuits.

In the event of an interrupted or unsuccessful programming event, perform the following steps:

1. Exit Service Programming System (SPS) and disconnect all programming equipment from the vehicle.
2. Disconnect all battery voltage or ignition voltage sources from the control module.

Note: All voltage sources must be removed for a minimum of 10 min. This can be done several ways and should be completed by using the least intrusive way. This can vary depending on vehicle and control module location and can be done by one of the options listed below:
- Removing all fuses supplying battery voltage and ignition voltage to the control module.
- Disconnecting all harness connectors from the control module.

- Performing a 12 V battery disconnect by disconnecting the battery negative cable. Refer to [Link target (target-id 37733-) not found] .

3. Reconnect all battery voltage and ignition voltage sources to the control module.
4. Close down the current session of Techline Connect and reopen a new session.
5. Verify the control module, data link connector, and programming tool connections are secure and the tool software is up to date.
6. Ignition/Vehicle OFF, ensure that the key fob is inside the vehicle and not moved for the duration of the programming to prevent an inadvertent power mode change during programming.
7. Access the Service Programming System (SPS) and follow the on-screen instructions for the control module.
8. Verify the control module can be programmed.

⇒ **If the control module can not be programmed**

8.1. Ignition ON/Vehicle in Service Mode for 1 min.

8.2. Ignition/Vehicle OFF.

8.3. Access SPS and follow the on-screen instructions for Replace and Program Control Module above.

Note: If programming is still not successful after the second programming attempt, check the following:

- For facilities using an internet firewall, ensure firewall settings are not blocking file downloads and/or require elevated rights.
- For United States and Canada GM dealers, the appropriate firewall settings can be found in the GM DEALER INFRASTRUCTURE & SECURITY GUIDELINES (DISG) section 2.d.vii.

8.4. Verify the control module can be programmed.

⇒ If the control module can not be programmed, replace the control module.

⇓ If the control module can be programmed

8.5. Clear DTCs.

⇓ **If the control module can be programmed**

9. Clear DTCs.

Repair Instructions

Perform the *Diagnostic Repair Verification 2-375* after completing the repair.

Control Module References 2-4 for control module replacement, programming, and setup.

B174W Front View Camera - Windshield: Programming and Setup

Note:

- DO NOT program a control module unless directed to by a service procedure or a service bulletin. If the control module is not properly configured with the correct calibration software, the control module will not control all of the vehicle features properly.
- Ensure the programming tool is equipped with the latest software and is securely connected to the data link connector. If there is an interruption during programming, programming failure or control module damage may occur.
- Stable battery voltage is critical during programming. Any fluctuation, spiking, over voltage or loss of voltage will interrupt programming. When required install the *EL-49642* SPS Programming Support Tool to maintain system voltage. If not available, connect a fully charged 12 V jumper or booster pack disconnected from the AC voltage supply. DO NOT connect a battery charger.
- Turn OFF or disable systems that may put a load on the vehicles battery such as; interior lights, exterior lights (including daytime running lights), HVAC, radio, etc.
- During the programming procedure, follow the SPS prompts for the correct ignition switch position.
- Clear DTCs after programming is complete. Clearing powertrain DTCs will set the Inspection/ Maintenance (I/M) system status indicators to NO.
- Anytime the B174W Frontview Camera - Windshield is removed from its mount, it must follow the Frontview Camera Module Learn procedure.

Following Replacement of Windshield

The B174W Frontview Camera - Windshield must be calibrated, refer to [Link target (target-id 297673-) not found] .

Replace and Program Frontview Camera Module or Reprogram Frontview Camera Module (without UGN)

Note: Due to continuous improvements, the on screen selections may vary from instructions below.

To program a replacement or an existing B174W Frontview Camera - Windshield , perform the following procedure:

1. Ignition/Vehicle OFF
2. Access the Service Programming System (SPS) and follow the on-screen instructions.
3. On the SPS Supported Controllers screen, select B174W Frontview Camera - Windshield – Programming and follow the on-screen instructions.

4. On the SPS Supported Controllers screen, select B174W Frontview Camera - Windshield – Setup **(if this option is available)** and follow the on-screen instructions.
5. Clear DTCs.
6. Following B174W Frontview Camera - Windshield replacement and reprogramming, the module must be calibrated. Refer to [Link target (target-id 297673-) not found] .

Replace and Program Frontview Camera Module or Reprogram Frontview Camera Module (with UGN)

To program a replacement or an existing B174W Frontview Camera - Windshield , perform the following procedure:

1. Access the Service Programming System (SPS) and follow the on-screen instructions.
2. On the SPS Supported Controllers screen, select B174W Frontview Camera - Windshield – Programming and follow the on-screen instructions.
3. On the SPS Supported Controllers screen, select B174W Frontview Camera - Windshield – Setup **(if this option is available)** and follow the on-screen instructions.

Note: After programming is performed, it is normal to have DTC B101E 4B set until calibration is complete.

If reprogramming an existing module that was previously calibrated, calibration is not required. The module retains its calibration settings during reprogramming. If a new module was programmed the module alignment must be calibrated. Using a scantool, initiate the learn procedure for B174W Frontview Camera - Windshield . The scan tool must remain connected and on the calibration screen during the entire process.

Refer to [Link target (target-id 297673-) not found] .

Unsuccessful Programming Recovery

In the event of an interrupted or unsuccessful programming event, perform the following steps:

1. DO NOT turn the ignition OFF. Ensure that all B174W Frontview Camera - Windshield , DLC and programming tool connections are secure and the TIS terminal operating software is up to date.
2. Attempt to reprogram the B174W Frontview Camera - Windshield .
3. If the B174W Frontview Camera - Windshield can still not be programmed, turn the ignition OFF for at least one minute.
4. Turn the ignition ON and attempt to reprogram the B174W Frontview Camera - Windshield . The B174W Frontview Camera - Windshield should program.
   ⇒ If the B174W Frontview Camera - Windshield still cannot be programmed, replace the B174W Frontview Camera - Windshield .

B218L Side Obstacle Detection Control Module - Left: Programming and Setup

Note:

- DO NOT program a control module unless directed to by a service procedure or a service bulletin. If the ECU is not properly configured with the correct calibration software, the ECU will not control all of the vehicle features properly.
- Ensure the programming tool is equipped with the latest software and is securely connected to the data link connector. If there is an interruption during programming, programming failure or ECU damage may occur.
- Stable battery voltage is critical during programming. Any fluctuation, spiking, over voltage or loss of voltage will interrupt programming. Install the *EL-49642* SPS Programming Support Tool to maintain system voltage. If not available, connect a fully charged 12 V jumper or booster pack disconnected from the AC voltage supply.
- Turn OFF or disable systems that may put a load on the vehicles battery such as; interior lights, exterior lights (including daytime running lights), HVAC, radio, etc.
- During the programming procedure, follow the SPS prompts for the correct ignition switch position.
- Clear DTCs after programming is complete. Clearing powertrain DTCs will set the Inspection/ Maintenance (I/M) system status indicators to NO.

Reference Information

Special Tools
EL-49642 SPS Programming Support Tool

For equivalent regional tools, refer to *Special Tools 2-72*.

Replace and Program ECU or Reprogram ECU

To program a replacement or an existing ECU, perform the following procedure:

Note:
- Due to continuous improvements, the on screen selections may vary from instructions below.
- Some systems only have one programmable Side Object Sensor Module.

1. Ignition/Vehicle OFF
2. Access the Service Programming System (SPS) and follow the on-screen instructions.
3. On the SPS Supported Controllers screen, select B218 Side Object Sensor Module then select B218R Right Side Object Sensor Module or B218L Left Side Object Detection.
4. On the SPS Select Function / Sequence screen, select Sequential Programming or Programming
5. Clear DTCs.

Unsuccessful Programming Recovery

In the event of an interrupted or unsuccessful programming event, perform the following steps:

1. DO NOT turn the ignition OFF. Ensure that all ECU, DLC and programming tool connections are secure and the TIS terminal operating software is up to date.
2. Attempt to reprogram the ECU.
3. If the ECU can still not be programmed, turn the ignition OFF for at least one minute.
4. Turn the ignition ON and attempt to reprogram the ECU. The ECU should program.
   ⇒ If the ECU still cannot be programmed, replace the ECU.

Repair Instructions

Perform the *Diagnostic Repair Verification 2-375* after completing the repair.

Control Module References 2-4 for Control Module replacement, programming and setup

B218R Side Obstacle Detection Control Module - Right: Programming and Setup

Note:
- DO NOT program a control module unless directed to by a service procedure or a service bulletin. If the ECU is not properly configured with the correct calibration software, the ECU will not control all of the vehicle features properly.
- Ensure the programming tool is equipped with the latest software and is securely connected to the data link connector. If there is an interruption during programming, programming failure or ECU damage may occur.
- Stable battery voltage is critical during programming. Any fluctuation, spiking, over voltage or loss of voltage will interrupt programming. Install the *EL-49642* SPS Programming Support Tool to maintain system voltage. If not available, connect a fully charged 12 V jumper or booster pack disconnected from the AC voltage supply.
- Turn OFF or disable systems that may put a load on the vehicles battery such as; interior lights, exterior lights (including daytime running lights), HVAC, radio, etc.
- During the programming procedure, follow the SPS prompts for the correct ignition switch position.
- Clear DTCs after programming is complete. Clearing powertrain DTCs will set the Inspection/ Maintenance (I/M) system status indicators to NO.

Reference Information

Special Tools
EL-49642 SPS Programming Support Tool

For equivalent regional tools, refer to *Special Tools 2-72*.

Replace and Program ECU or Reprogram ECU

To program a replacement or an existing ECU, perform the following procedure:

Note:
- Due to continuous improvements, the on screen selections may vary from instructions below.
- Some systems only have one programmable Side Object Sensor Module.

1. Ignition/Vehicle OFF
2. Access the Service Programming System (SPS) and follow the on-screen instructions.
3. On the SPS Supported Controllers screen, select B218 Side Object Sensor Module then select B218R Right Side Object Sensor Module or B218L Left Side Object Detection.
4. On the SPS Select Function / Sequence screen, select Sequential Programming or Programming
5. Clear DTCs.

Unsuccessful Programming Recovery

In the event of an interrupted or unsuccessful programming event, perform the following steps:

1. DO NOT turn the ignition OFF. Ensure that all ECU, DLC and programming tool connections are secure and the TIS terminal operating software is up to date.
2. Attempt to reprogram the ECU.
3. If the ECU can still not be programmed, turn the ignition OFF for at least one minute.
4. Turn the ignition ON and attempt to reprogram the ECU. The ECU should program.
   ⇒ If the ECU still cannot be programmed, replace the ECU.

Repair Instructions

Perform the *Diagnostic Repair Verification 2-375* after completing the repair.

Control Module References 2-4 for Control Module replacement, programming and setup

B233B Forward Range Radar Sensor - Long Range: Programming and Setup

Note:

- DO NOT program a control module unless directed to by a service procedure or a service bulletin. If the Long Range Radar Sensor Module is not properly configured with the correct calibration software, the Long Range Radar Sensor Module will not control all of the vehicle features properly.
- Ensure the programming tool is equipped with the latest software and is securely connected to the data link connector. If there is an interruption during programming or programming failure, Long Range Radar Sensor Module damage may occur.
- Stable battery voltage is critical during programming. Any fluctuation, spiking, over voltage or loss of voltage will interrupt programming. When required install the *EL-49642* SPS Programming Support Tool to maintain system voltage. If not available, connect a fully charged 12 V jumper or booster pack disconnected from the AC voltage supply. DO NOT connect a battery charger.
- Turn OFF or disable systems that may put a load on the vehicles battery such as; interior lights, exterior lights (including daytime running lights), HVAC, radio, etc.
- During the programming procedure, follow the SPS prompts for the correct ignition switch position.
- Clear DTCs after programming is complete. Clearing powertrain DTCs will set the Inspection/ Maintenance (I/M) system status indicators to NO.

Reprogram Radar Sensor Module - Long Range

To reprogram an existing Long Range Radar Sensor Module, perform the following procedure:

1. Ignition/Vehicle OFF.
2. Access the Service Programming System (SPS) and follow the on-screen instructions.
3. On the SPS Supported Controllers screen, select B233B Radar Sensor Module - Long Range – Programming and follow the on-screen instructions.
4. Ignition OFF and all vehicle systems OFF. It may take up to 2 minutes for all vehicle systems to power down.

Replace and Program Radar Sensor Module - Long Range

To program a replacement Long Range Radar Sensor Module, perform the following procedure:

1. Ignition/Vehicle OFF.
2. Access the Service Programming System (SPS) and follow the on-screen instructions.
3. On the SPS Supported Controllers screen, select B233B Radar Sensor Module - Long Range – Programming and follow the on-screen instructions.
4. Ignition OFF and all vehicle systems OFF. It may take up to 2 minutes for all vehicle systems to power down.
5. Following programming, the module alignment must be calibrated.

   Refer to [Link target (target-id 283687-) not found] .

Unsuccessful Programming Recovery

In the event of an interrupted or unsuccessful programming event, perform the following steps:

1. Ignition ON. Ensure the control module, DLC and programming tool connections are secure and the SPS software is up to date.
2. Verify the control module can be reprogrammed.

⇒ **If the control module cannot be reprogrammed**

2.1. Ignition OFF for one minute, ignition ON.

2.2. Verify the control module can be reprogrammed.

⇒ If the control module cannot be reprogrammed, replace the control module.

⇓ If the control module can be reprogrammed.

2.3. All OK.

⇓ **If the control module can be reprogrammed**

3. All OK.

Repair Instructions

Perform the *Diagnostic Repair Verification 2-375* after completing the repair.

Control Module References 2-4 for control module replacement, programming and setup.

B233LF Short Range Radar Sensor - Left Front: Programming and Setup

Note:

- DO NOT program a control module unless directed to by a service procedure or a service bulletin. If the control module is not properly configured with the correct calibration software, the control module will not control all of the vehicle features properly.
- Ensure the programming tool is equipped with the latest software and is securely connected to the data link connector. If there is an interruption during programming, programming failure or control module damage may occur.
- Stable battery voltage is critical during programming. Any fluctuation, spiking, over voltage or loss of voltage will interrupt programming. When required install the *EL-49642* SPS Programming Support Tool to maintain system voltage. If not available, connect a fully charged 12 V jumper or booster pack disconnected from the AC voltage supply. DO NOT connect a battery charger.
- Turn OFF or disable systems that may put a load on the vehicles battery such as; interior lights, exterior lights (including daytime running lights), HVAC, radio, etc.
- During the programming procedure, follow the SPS prompts for the correct ignition switch position.
- Clear DTCs after programming is complete. Clearing powertrain DTCs will set the Inspection/ Maintenance (I/M) system status indicators to NO.

Diagnostic Aids

Note: This programming document applies to the B233 Radar Sensor Module – Short Range. For B218 Side Object Sensor Module (if equipped) refer to Side Object Sensor Programming and Setup.

Replace and Program Control Module or Reprogram Control Module

To program a replacement or an existing control module, perform the following procedure:

1. Ignition/Vehicle OFF
2. Access the Service Programming System (SPS) and follow the on-screen instructions.
3. On the SPS Supported Controllers screen, select B233 Radar Sensor Module – Short Range - Programming and follow the on-screen instructions.
4. Ignition/vehicle ON. Run Clear Short Range Radar Sensor Vehicle Position located in the scan tool under Configuration/Reset Functions in the B233 Short Range Radar Sensor.
5. Ignition/Vehicle OFF
6. Ignition/Vehicle ON
7. Clear DTCs.

Unsuccessful Programming Recovery

In the event of an interrupted or unsuccessful programming event, perform the following steps:

1. Ignition ON. Ensure the control module, DLC and programming tool connections are secure and the SPS software is up to date.
2. Verify the control module can be reprogrammed.

⇒ **If the control module cannot be reprogrammed**

2.1. Ignition OFF for one minute, ignition ON.

2.2. Verify the control module can be reprogrammed.

⇒ If the control module cannot be reprogrammed, replace the control module.

⇓ If the control module can be reprogrammed.

2.3. All OK.

⇓ **If the control module can be reprogrammed**

3. All OK.

Repair Instructions

Perform the *Diagnostic Repair Verification 2-375* after completing the repair.

Control Module References 2-4 for Control Module replacement, programming and setup

B233LR Short Range Radar Sensor - Left Rear: Programming and Setup

Note:

- DO NOT program a control module unless directed to by a service procedure or a service bulletin. If the control module is not properly configured with the correct calibration software, the control module will not control all of the vehicle features properly.
- Ensure the programming tool is equipped with the latest software and is securely connected to the data link connector. If there is an interruption during programming, programming failure or control module damage may occur.
- Stable battery voltage is critical during programming. Any fluctuation, spiking,

over voltage or loss of voltage will interrupt programming. When required install the *EL-49642* SPS Programming Support Tool to maintain system voltage. If not available, connect a fully charged 12 V jumper or booster pack disconnected from the AC voltage supply. DO NOT connect a battery charger.

- Turn OFF or disable systems that may put a load on the vehicles battery such as; interior lights, exterior lights (including daytime running lights), HVAC, radio, etc.
- During the programming procedure, follow the SPS prompts for the correct ignition switch position.
- Clear DTCs after programming is complete. Clearing powertrain DTCs will set the Inspection/ Maintenance (I/M) system status indicators to NO.

Diagnostic Aids

Note: This programming document applies to the B233 Radar Sensor Module – Short Range. For B218 Side Object Sensor Module (if equipped) refer to Side Object Sensor Programming and Setup.

Replace and Program Control Module or Reprogram Control Module

To program a replacement or an existing control module, perform the following procedure:

1. Ignition/Vehicle OFF.
2. Access the Service Programming System (SPS) and follow the on-screen instructions.
3. On the SPS Supported Controllers screen, select B233 Radar Sensor Module – Short Range - Programming and follow the on-screen instructions.
4. Ignition/vehicle ON. Run Clear Short Range Radar Sensor Vehicle Position located in the scan tool under Configuration/Reset Functions in the B233 Short Range Radar Sensor.
5. Ignition/Vehicle OFF.
6. Ignition/Vehicle ON.
7. Clear DTCs.

Unsuccessful Programming Recovery

In the event of an interrupted or unsuccessful programming event, perform the following steps:

1. Ignition/Vehicle ON. Ensure the control module, DLC and programming tool connections are secure and the SPS software is up to date.
2. Verify the control module can be reprogrammed.

⇒ **If the control module cannot be reprogrammed**

2.1. Ignition OFF for one minute, ignition ON.

2.2. Verify the control module can be reprogrammed.

⇒ If the control module cannot be reprogrammed, replace the control module.

⇓ If the control module can be reprogrammed.

2.3. All OK.

⇓ **If the control module can be reprogrammed**

3. All OK.

Repair Instructions

Perform the *Diagnostic Repair Verification 2-375* after completing the repair.

Control Module References 2-4 for Control Module replacement, programming and setup

B233RF Short Range Radar Sensor - Right Front: Programming and Setup

Note:

- DO NOT program a control module unless directed to by a service procedure or a service bulletin. If the control module is not properly configured with the correct calibration software, the control module will not control all of the vehicle features properly.
- Ensure the programming tool is equipped with the latest software and is securely connected to the data link connector. If there is an interruption during programming, programming failure or control module damage may occur.
- Stable battery voltage is critical during programming. Any fluctuation, spiking, over voltage or loss of voltage will interrupt programming. When required install the *EL-49642* SPS Programming Support Tool to maintain system voltage. If not available, connect a fully charged 12 V jumper or booster pack disconnected from the AC voltage supply. DO NOT connect a battery charger.
- Turn OFF or disable systems that may put a load on the vehicles battery such as; interior lights, exterior lights (including daytime running lights), HVAC, radio, etc.
- During the programming procedure, follow the SPS prompts for the correct ignition switch position.
- Clear DTCs after programming is complete. Clearing powertrain DTCs will set the Inspection/ Maintenance (I/M) system status indicators to NO.

Diagnostic Aids

Note: This programming document applies to the B233 Radar Sensor Module – Short Range. For B218 Side Object Sensor Module (if equipped) refer to Side Object Sensor Programming and Setup.

Replace and Program Control Module or Reprogram Control Module

To program a replacement or an existing control module, perform the following procedure:

1. Ignition/Vehicle OFF
2. Access the Service Programming System (SPS) and follow the on-screen instructions.
3. On the SPS Supported Controllers screen, select B233 Radar Sensor Module – Short Range - Programming and follow the on-screen instructions.
4. Ignition/vehicle ON. Run Clear Short Range Radar Sensor Vehicle Position located in the scan tool under Configuration/Reset Functions in the B233 Short Range Radar Sensor.
5. Ignition/Vehicle OFF
6. Ignition/Vehicle ON
7. Clear DTCs.

Unsuccessful Programming Recovery

In the event of an interrupted or unsuccessful programming event, perform the following steps:

1. Ignition ON. Ensure the control module, DLC and programming tool connections are secure and the SPS software is up to date.
2. Verify the control module can be reprogrammed.

⇒ **If the control module cannot be reprogrammed**

2.1. Ignition OFF for one minute, ignition ON.

2.2. Verify the control module can be reprogrammed.

⇒ If the control module cannot be reprogrammed, replace the control module.

⇓ If the control module can be reprogrammed.

2.3. All OK.

⇓ **If the control module can be reprogrammed**

3. All OK.

Repair Instructions

Perform the *Diagnostic Repair Verification 2-375* after completing the repair.

Control Module References 2-4 for Control Module replacement, programming and setup

B233RR Short Range Radar Sensor - Right Rear: Programming and Setup

Note:

- DO NOT program a control module unless directed to by a service procedure or a service bulletin. If the control module is not properly configured with the correct calibration software, the control module will not control all of the vehicle features properly.
- Ensure the programming tool is equipped with the latest software and is securely connected to the data link connector. If there is an interruption during programming, programming failure or control module damage may occur.
- Stable battery voltage is critical during programming. Any fluctuation, spiking, over voltage or loss of voltage will interrupt programming. When required install the *EL-49642* SPS Programming Support Tool to maintain system voltage. If not available, connect a fully charged 12 V jumper or booster pack disconnected from the AC voltage supply. DO NOT connect a battery charger.
- Turn OFF or disable systems that may put a load on the vehicles battery such as; interior lights, exterior lights (including daytime running lights), HVAC, radio, etc.
- During the programming procedure, follow the SPS prompts for the correct ignition switch position.
- Clear DTCs after programming is complete. Clearing powertrain DTCs will set the Inspection/ Maintenance (I/M) system status indicators to NO.

Diagnostic Aids

Note: This programming document applies to the B233 Radar Sensor Module – Short Range. For B218 Side Object Sensor Module (if equipped) refer to Side Object Sensor Programming and Setup.

Replace and Program Control Module or Reprogram Control Module

To program a replacement or an existing control module, perform the following procedure:

1. Ignition/Vehicle OFF.
2. Access the Service Programming System (SPS) and follow the on-screen instructions.
3. On the SPS Supported Controllers screen, select B233 Radar Sensor Module – Short Range - Programming and follow the on-screen instructions.
4. Ignition/vehicle ON. Run Clear Short Range Radar Sensor Vehicle Position located in the scan tool under Configuration/Reset Functions in the B233 Short Range Radar Sensor.
5. Ignition/Vehicle OFF.
6. Ignition/Vehicle ON.
7. Clear DTCs.

Unsuccessful Programming Recovery

In the event of an interrupted or unsuccessful programming event, perform the following steps:

1. Ignition/Vehicle ON. Ensure the control module, DLC and programming tool connections are secure and the SPS software is up to date.
2. Verify the control module can be reprogrammed.

⇒ **If the control module cannot be reprogrammed**

2.1. Ignition OFF for one minute, ignition ON.

2.2. Verify the control module can be reprogrammed.

⇒ If the control module cannot be reprogrammed, replace the control module.

⇓ If the control module can be reprogrammed.

2.3. All OK.

⇓ **If the control module can be reprogrammed**

3. All OK.

Repair Instructions

Perform the *Diagnostic Repair Verification 2-375* after completing the repair.

Control Module References 2-4 for Control Module replacement, programming and setup

B233SL Short Range Radar Rear Side Sensor - Left: Programming and Setup

Note:

- DO NOT program a control module unless directed to by a service procedure or a service bulletin. If the control module is not properly configured with the correct calibration software, the control module will not control all of the vehicle features properly.
- Ensure the programming tool is equipped with the latest software and is securely connected to the data link connector. If there is an interruption during programming, programming failure or control module damage may occur.
- Stable battery voltage is critical during programming. Any fluctuation, spiking, over voltage or loss of voltage will interrupt programming. When required install the *EL-49642* SPS Programming Support Tool to maintain system voltage. If not available, connect a fully charged 12 V jumper or booster pack disconnected from the AC voltage supply. DO NOT connect a battery charger.
- Turn OFF or disable systems that may put a load on the vehicles battery such as; interior lights, exterior lights (including daytime running lights), HVAC, radio, etc.
- During the programming procedure, follow the SPS prompts for the correct ignition switch position.
- Clear DTCs after programming is complete. Clearing powertrain DTCs will set the Inspection/ Maintenance (I/M) system status indicators to NO.

Diagnostic Aids

Note: This programming document applies to the B233 Radar Sensor Module – Short Range. For B218 Side Object Sensor Module (if equipped) refer to Side Object Sensor Programming and Setup.

Replace and Program Control Module or Reprogram Control Module

To program a replacement or an existing control module, perform the following procedure:

1. Ignition/Vehicle OFF.
2. Access the Service Programming System (SPS) and follow the on-screen instructions.
3. On the SPS Supported Controllers screen, select B233 Radar Sensor Module – Short Range - Programming and follow the on-screen instructions.
4. Ignition/vehicle ON. Run Clear Short Range Radar Sensor Vehicle Position located in the scan tool under Configuration/Reset Functions in the B233 Short Range Radar Sensor.
5. Ignition/Vehicle OFF.
6. Ignition/Vehicle ON.
7. Clear DTCs.

Unsuccessful Programming Recovery

In the event of an interrupted or unsuccessful programming event, perform the following steps:

1. Ignition/Vehicle ON. Ensure the control module, DLC and programming tool connections are secure and the SPS software is up to date.
2. Verify the control module can be reprogrammed.

⇒ **If the control module cannot be reprogrammed**

2.1. Ignition OFF for one minute, ignition ON.

2.2. Verify the control module can be reprogrammed.

⇒ If the control module cannot be reprogrammed, replace the control module.

⇓ If the control module can be reprogrammed.

2.3. All OK.

⇓ **If the control module can be reprogrammed**

3. All OK.

Repair Instructions

Perform the *Diagnostic Repair Verification 2-375* after completing the repair.

Control Module References 2-4 for Control Module replacement, programming and setup

B233SR Short Range Radar Rear Side Sensor - Right: Programming and Setup

Note:

- DO NOT program a control module unless directed to by a service procedure or a service bulletin. If the control module is not properly configured with the correct calibration software, the control module will not control all of the vehicle features properly.
- Ensure the programming tool is equipped with the latest software and is securely connected to the data link connector. If there is an interruption during programming, programming failure or control module damage may occur.
- Stable battery voltage is critical during programming. Any fluctuation, spiking, over voltage or loss of voltage will interrupt programming. When required install the *EL-49642* SPS Programming Support Tool to maintain system voltage. If not available, connect a fully charged 12 V jumper or booster pack disconnected from the AC voltage supply. DO NOT connect a battery charger.
- Turn OFF or disable systems that may put a load on the vehicles battery such as; interior lights, exterior lights (including daytime running lights), HVAC, radio, etc.
- During the programming procedure, follow the SPS prompts for the correct ignition switch position.
- Clear DTCs after programming is complete. Clearing powertrain DTCs will set the Inspection/ Maintenance (I/M) system status indicators to NO.

Diagnostic Aids

Note: This programming document applies to the B233 Radar Sensor Module – Short Range. For B218 Side Object Sensor Module (if equipped) refer to Side Object Sensor Programming and Setup.

Replace and Program Control Module or Reprogram Control Module

To program a replacement or an existing control module, perform the following procedure:

1. Ignition/Vehicle OFF.
2. Access the Service Programming System (SPS) and follow the on-screen instructions.
3. On the SPS Supported Controllers screen, select B233 Radar Sensor Module – Short Range - Programming and follow the on-screen instructions.
4. Ignition/vehicle ON. Run Clear Short Range Radar Sensor Vehicle Position located in the scan tool under Configuration/Reset Functions in the B233 Short Range Radar Sensor.
5. Ignition/Vehicle OFF.
6. Ignition/Vehicle ON.
7. Clear DTCs.

Unsuccessful Programming Recovery

In the event of an interrupted or unsuccessful programming event, perform the following steps:

1. Ignition/Vehicle ON. Ensure the control module, DLC and programming tool connections are secure and the SPS software is up to date.
2. Verify the control module can be reprogrammed.

⇒ **If the control module cannot be reprogrammed**

2.1. Ignition OFF for one minute, ignition ON.

2.2. Verify the control module can be reprogrammed.

⇒ If the control module cannot be reprogrammed, replace the control module.

⇓ If the control module can be reprogrammed.

2.3. All OK.

⇓ **If the control module can be reprogrammed**

3. All OK.

Repair Instructions

Perform the *Diagnostic Repair Verification 2-375* after completing the repair.

Control Module References 2-4 for Control Module replacement, programming and setup

K4 Assist Step Control Module: Programming and Setup

Note:

- DO NOT program a control module unless directed to by a service procedure or a service bulletin. If the ECU is not properly configured with the correct calibration software, the ECU will not control all of the vehicle features properly.
- Ensure the programming tool is equipped with the latest software and is securely connected to the data link connector. If there is an interruption during programming, programming failure or ECU damage may occur.
- Stable battery voltage is critical during programming. Any fluctuation, spiking,

over voltage or loss of voltage will interrupt programming. When required, install a battery maintainer or power supply that provides a steady and stable voltage. Do not use a battery charger, as charging voltage will often fluctuate when connected to the vehicle. This may interrupt programing. If a battery maintainer is not available, connect a fully charged 12 V jumper or booster pack disconnected from the AC voltage supply.

- Turn OFF or disable systems that may put a load on the vehicles battery such as; interior lights, exterior lights (including daytime running lights), HVAC, , etc.
- During the programming procedure, follow the SPS prompts for the correct ignition switch position.
- Clear DTCs after programming is complete. Clearing powertrain DTCs will set the Inspection/ Maintenance (I/M) system status indicators to NO.

Assist Step Learn

If service was performed in which the assist steps were put into the service position, it is necessary to perform the Self Test learn. Refer to: [Link target (target-id 328895-) not found]

Replace and Program Control Module or Reprogram Control Module

To program a replacement or an existing control module, perform the following procedure:

1. Ignition/Vehicle OFF
2. Access the Service Programming System (SPS) and follow the on-screen instructions.
3. On the SPS Supported Controllers screen, under Select Controller, select K4 Assist Step Control Module.
4. On the SPS Supported Controllers screen, under Select Function / Sequence, select Programming and follow the on-screen instructions.
5. On the SPS Supported Controllers screen, under Select Function / Sequence, select Setup and follow the on-screen instructions.
6. At the end of programming, choose the “Clear DTCs” function on the SPS screen.

Unsuccessful Programming Recovery

In the event of an interrupted or unsuccessful programming event, perform the following steps:

1. Ignition ON. Ensure the control module, DLC and programming tool connections are secure and the SPS software is up to date.
2. Verify the control module can be reprogrammed.

⇒ **If the control module cannot be reprogrammed**

2.1. Ignition OFF for one minute, ignition ON.

2.2. Verify the control module can be reprogrammed.

⇒ If the control module cannot be reprogrammed, replace the control module.

⇓ If the control module can be reprogrammed.

2.3. All OK.

⇓ **If the control module can be reprogrammed**

3. All OK.

K5 Automatic Level Control Module: Programming and Setup

Note:

- DO NOT program a control module unless directed to by a service procedure or a service bulletin. If the control module is not properly configured with the correct calibration software, the control module will not control all of the vehicle features properly.
- Ensure the programming tool is equipped with the latest software and is securely connected to the data link connector. If there is an interruption during programming, programming failure or control module damage may occur.
- Stable battery voltage is critical during programming. Any fluctuation, spiking, over voltage or loss of voltage will interrupt programming. When required, install a battery maintainer or power supply that provides a steady and stable voltage. Do not use a battery charger, as charging voltage will often fluctuate when connected to the vehicle. This may interrupt programing. If a battery maintainer is not available, connect a fully charged 12 V jumper or booster pack disconnected from the AC voltage supply.
- Turn OFF or disable systems that may put a load on the vehicles battery such as; interior lights, exterior lights (including daytime running lights), HVAC, radio, etc.
- During the programming procedure, follow the SPS prompts for the correct ignition switch position.
- Clear DTCs after programming is complete. Clearing powertrain DTCs will set the Inspection/ Maintenance (I/M) system status indicators to NO.

Replace and Program Control Module or Reprogram Control Module

1. Access the Service Programming System (SPS) and follow the on-screen instructions.
2. On the SPS Supported Controllers screen, select K5 Automatic Level Control Module - Programming and follow the on-screen instructions.
3. Clear DTCs.
4. With a scan tool, perform the Automatic Level Control Trim Height Learn, if applicable.

Unsuccessful Programming Recovery

In the event of an interrupted or unsuccessful programming event, perform the following steps:

1. Ignition ON. Ensure the control module, DLC and programming tool connections are secure and the SPS software is up to date.
2. Verify the control module can be reprogrammed.

⇒ **If the control module cannot be reprogrammed**

2.1. Ignition OFF for one minute, ignition ON.

2.2. Verify the control module can be reprogrammed.

⇒ If the control module cannot be reprogrammed, replace the control module.

⇓ If the control module can be reprogrammed.

2.3. All OK.

⇓ **If the control module can be reprogrammed**

3. All OK.

Repair Instructions

Perform the *Diagnostic Repair Verification 2-375* after completing the repair.

Control Module References 2-4 for Control Module replacement, programming and setup

K9 Body Control Module: Programming and Setup

Note:

- Do NOT program a control module unless directed to by a service procedure or a service bulletin. If the control module is not properly configured with the correct calibration software, the control module will not control all of the vehicle features properly.
- Verify the programming tool is equipped with the latest software and is securely connected to the data link connector. If there is an interruption during programming, programming failure or control module damage may occur.
- Stable battery voltage is critical during programming. Any fluctuation, spiking, over voltage or loss of voltage will interrupt programming. When required, install a battery maintainer or power supply that provides a steady and stable voltage. Do not use a battery charger, as charging voltage will often fluctuate when connected to the vehicle. This may interrupt programming. If a battery maintainer is not available, connect a fully charged 12 V jumper or booster pack disconnected from the AC voltage supply.
- Turn OFF or disable systems that may put a load on the vehicle's battery such as interior lights, exterior lights (including daytime running lights), HVAC, radio, etc.
- Programming must begin with the Ignition/Vehicle OFF. Programming will direct the appropriate control module(s) to change power mode as needed during the procedure, independent of the vehicle's power mode.
- To prevent programming failure due to unintended wireless drops, it is recommended that a wired MDI 2 connection be used when programming the control module.
- Clear DTCs after programming is complete. Clearing powertrain DTCs will set the Inspection/ Maintenance (I/M) system status indicators to No.

Reference Information

Special Tools

- *EL-52545*
  Tire Pressure Monitor Sensor and RF Diagnostic Tool
  or *EL-50448*
  Tire Pressure Monitor Sensor Activation Tool
- *EL-52100* Multiple Diagnostic Interface 2 (MDI 2)

For equivalent regional tools, refer to *Special Tools 2-72*.

Programming a New Control Module

To program a replacement K9 Body Control Module (BCM), perform the following procedure:

Note:

- Ensure the *EL-52100* (MDI 2) is used when programming the vehicle and verify it is working properly. Using the EL-47955 (MDI) will result in a programming failure.
- Verify all control modules are connected and communicating before attempting to program the control module.
- Verify the key fob is inside the vehicle. If the key fob is not inside the vehicle, the serial data authentication configuration procedure which runs automatically at the end of the programming step will fail even though the programming appears to run successfully. If the serial data authentication configuration procedure fails, DTC U1962 will set and/or the setup step will fail or be incomplete.
- Begin with the vehicle in vehicle OFF power mode. The Service Programming System will power mode the vehicle.

1. Ignition/Vehicle OFF, ensure that the key fob is inside the vehicle and not moved for the duration of the programming to prevent an inadvertent power mode change during programming.
2. Access the Service Programming System (SPS) and follow the on-screen instructions.

Note: If unable to power mode vehicle for Brake Pedal Position Learn procedure during programming process, the driver door must be opened/closed continuously until the vehicle enters power mode.

3. On the SPS Supported Controllers screen, select K9 Body Control Module - Programming and follow the on-screen instructions.
4. Place the keyless entry transmitter in the programming pocket prior to proceeding with the next step. All additional transmitters must be at least 3 m (9.8 ft) away from the vehicle. Refer to the Remote Keyless Entry (RKE) System Operation document in the owner manual for the exact pocket location. This document is located in the Keys, Doors, and Windows > Keys and Locks category.

Note:

- To prevent errors or immobilizer learn failure, the vehicle must be in Park (for automatic transmission) or Neutral with park brake applied (for manual transmission).
- If DTC B1987 set immediately after programming a replacement K9 Body Control Module, the Immobilizer Learn procedure was not properly completed. The Immobilizer Learn procedure needs to be performed again.
- The Immobilizer Learn process may take between 10-12 min and progress will appear to have stopped during this process. This is a normal security timer response and a restart should not be performed.

5. On the SPS Supported Controllers screen, select Z1 Immobilizer Learn. On the next screen, select Body Control Module IMMO Learn with Existing Transponder or Remote Key and follow the on-screen instructions. When Immobilizer Learn is complete, press the Unlock button on the keyless entry transmitter to allow the keyless entry transmitter to exit the Immobilizer Learn mode.

Note: When performing the Tire Pressure Monitor Sensor Learn during K9 Body Control Module setup, the *EL-52545*
Tire Pressure Monitor Sensor and RF Diagnostic Tool must be used to activate each tire pressure sensor.

6. On the SPS Supported Controllers screen, select K9 Body Control Module - Setup and follow the on-screen instructions.
7. Check the driver information center display for additional messages regarding further calibration instructions. If there are no additional driver information center instructions present, programming is complete.
8. Clear DTCs.

Programming an Existing Control Module

To program an existing K9 Body Control Module, perform the following procedure:

Note:

- Ensure the *EL-52100* (MDI 2) is used when programming the vehicle and verify it is working properly. Using the EL-47955 (MDI) will result in a programming failure.
- Verify all control modules are connected and communicating before attempting to program the control module.
- Verify the key fob is inside the vehicle. If the key fob is not inside the vehicle, the serial data authentication configuration procedure which runs automatically at the end of the programming step will fail even though the programming appears to run successfully. If the serial data authentication configuration procedure fails, DTC U1962 will set and/or the setup step will fail or be incomplete.
- Begin with the vehicle in vehicle OFF power mode. The Service Programming System will power mode the vehicle.

1. Ignition/Vehicle OFF, ensure that the key fob is inside the vehicle and not moved for the duration of the programming to prevent an inadvertent power mode change during programming.
2. Access the Service Programming System (SPS) and follow the on-screen instructions.
3. On the SPS Supported Controllers screen, select K9 Body Control Module - Programming and follow the on-screen instructions.
4. Check the driver information center display for additional messages regarding further calibration instructions. If there are no additional driver information center instructions present, programming is complete.
5. Clear DTCs.

Unsuccessful Programming Recovery

Note:

- Ensure the *EL-52100* (MDI 2) is used when programming the vehicle. Using the EL-47955 (MDI) will result in a programming failure.
- It may be necessary to use another *EL-52100* (MDI 2) and/or cables to verify proper operation to eliminate the possibility of faulty equipment.
- If Ethernet programming fails, ensure there is no fault in the Ethernet circuits between the X84 Data Link Connector and K56 Serial Data Gateway Module. Refer to [Link target (target-id 300812-) not found] to diagnose these Ethernet circuits.

In the event of an interrupted or unsuccessful programming event, perform the following steps:

1. Exit Service Programming System (SPS) and disconnect all programming equipment from the vehicle.
2. Disconnect all battery voltage or ignition voltage sources from the K9 Body Control Module. All voltage sources must be removed for a minimum of 10 min. This can be done several ways and should be completed by using the least intrusive way. This can vary depending on vehicle and control module location and can be done by one of the options listed below:
   - Removing all fuses supplying battery voltage and ignition voltage to the control module.
   - Disconnecting all harness connectors from the control module.
   - Performing a 12 V battery disconnect by disconnecting the battery negative cable. Refer to [Link target (target-id 37733-) not found] .
3. Reconnect all battery voltage and ignition voltage sources to the K9 Body Control Module.
4. Close down the current session of Techline Connect and reopen a new session.
5. Verify the K9 Body Control Module, X84 Data Link Connector, and programming tool connections are secure and the tool software is up to date.
6. Ignition/Vehicle OFF, ensure that the key fob is inside the vehicle and not moved for the duration of the programming to prevent an inadvertent power mode change during programming.
7. Access the Service Programming System (SPS) and follow the on-screen instructions for the K9 Body Control Module.
8. Verify the K9 Body Control Module can be programmed.

⇒ **If the K9 Body Control Module can not be programmed**

8.1. Ignition ON/Vehicle in Service Mode for 1 min.

8.2. Ignition/Vehicle OFF.

8.3. Access SPS and follow the on-screen instructions for the K9 Body Control Module.

Note: If programming is still not successful after the second programming attempt, check the following:

- For facilities using an internet firewall, ensure firewall settings are not blocking file downloads and/or require elevated rights.
- For United States and Canada GM dealers, the appropriate firewall settings can be found in the GM DEALER INFRASTRUCTURE & SECURITY GUIDELINES (DISG) section 2.d.vii.

8.4. Verify the K9 Body Control Module can be programmed.

⇒ If the K9 Body Control Module can not be programmed, replace the K9 Body Control Module.

⇓ If the K9 Body Control Module can be programmed

8.5. Clear DTCs.

⇓ **If the K9 Body Control Module can be programmed**

9. Clear DTCs.

Repair Instructions

Perform the Diagnostic Repair Verification after completing the repair: *Diagnostic Repair Verification 2-375*.

For control module replacement, programming, and setup, refer to: *Control Module References 2-4*.

K19 Suspension Control Module: Programming and Setup

Note:

- DO NOT program a control module unless directed to by a service procedure or a service bulletin. If the control module is not properly configured with the correct calibration software, the control module will not control all of the vehicle features properly.
- Ensure the programming tool is equipped with the latest software and is securely connected to the data link connector. If there is an interruption during programming, programming failure or control module damage may occur.
- Stable battery voltage is critical during programming. Any fluctuation, spiking, over voltage or loss of voltage will interrupt programming. When required, install a battery maintainer or power supply that provides a steady and stable voltage. Do not use a battery charger, as charging voltage will often fluctuate when connected to the vehicle. This may interrupt programing. If a battery maintainer is not available, connect a fully charged 12 V jumper or booster pack disconnected from the AC voltage supply.
- Turn OFF or disable systems that may put a load on the vehicles battery such as; interior lights, exterior lights (including daytime running lights), HVAC, radio, etc.
- During the programming procedure, follow the SPS prompts for the correct ignition switch position.
- Clear DTCs after programming is complete. Clearing powertrain DTCs will set the Inspection/ Maintenance (I/M) system status indicators to NO.

Replace and Program Control Module

1. Access the Service Programming System (SPS) and follow the on-screen instructions.
2. On the SPS Supported Controllers screen, select K19 Suspension Control Module - Programming and follow the on-screen instructions.
3. Clear DTCs.
4. With a scan tool, perform the suspension system calibration procedure, if applicable.

Reprogram Control Module

1. Access the Service Programming System (SPS) and follow the on-screen instructions.
2. On the SPS Supported Controllers screen, select K19 Suspension Control Module - Programming and follow the on-screen instructions.
3. Clear DTCs.
4. With a scan tool, perform the suspension system calibration procedure, if applicable.

Unsuccessful Programming Recovery

In the event of an interrupted or unsuccessful programming event, perform the following steps:

1. Ignition ON. Ensure the control module, DLC and programming tool connections are secure and the SPS software is up to date.
2. Verify the control module can be reprogrammed.

⇒ **If the control module cannot be reprogrammed**

2.1. Ignition OFF for one minute, ignition ON.

2.2. Verify the control module can be reprogrammed.

⇒ If the control module cannot be reprogrammed, replace the control module.

⇓ If the control module can be reprogrammed.

2.3. All OK.

⇓ **If the control module can be reprogrammed**

3. All OK.

Repair Instructions

Perform the *Diagnostic Repair Verification 2-375* after completing the repair.

Control Module References 2-4 for Control Module replacement, programming and setup

K20 Engine Control Module: Programming and Setup

Note:

- DO NOT program a control module unless directed to by a service procedure or a service bulletin. If the control module is not properly configured with the correct calibration software, the control module will not control all of the vehicle features properly.
- Ensure the programming tool is equipped with the latest software and is securely connected to the data link connector (DLC). If there is an interruption during programming, programming failure or control module damage may occur.
- Stable battery voltage is critical during programming. Any fluctuation, spiking, over voltage or loss of voltage will interrupt programming. When required, install a battery maintainer or power supply that provides a steady and stable voltage. Do not use a battery charger, as charging voltage will often fluctuate when connected to the vehicle. This may interrupt programing. If a battery maintainer is not available, connect a fully charged 12 V jumper or booster pack disconnected from the AC voltage supply.
- Turn OFF or disable systems that may put a load on the vehicles battery such as; interior lights, exterior lights (including daytime running lights), HVAC, radio, etc.
- During the programming procedure, follow the SPS prompts for the correct ignition switch position.
- Clear DTCs after programming is complete. Clearing powertrain DTCs will set the Inspection/ Maintenance (I/M) system status indicators to Incomplete.
- Note the engine oil life remaining percentage.
- If over 14k GVW, program the engine serial number with the scan tool.
- If unable to complete programming or have questions contact Techlline 1–800–828–6860

Replace and Program Control Module

Note:

- The Prepare Control Module for Removal function can only be performed when communication with the old control module is still possible.
- Instances may occur where data is not transferred during the Prepare Control Module for Removal Function

1. Ignition » On / Vehicle » In Service Mode
2. Perform the scan tool function: Create Report
   - Air Cleaner Life Remaining— If equipped
   - Engine Oil Life Remaining
   - Fuel Filter Life Remaining— If equipped
   - Fuel injector flow identifiers— If equipped
3. Access the Service Programming System and follow the on-screen instructions for the control module: K20 Engine Control Module

4. Select— Prepare Control Module for Removal— If applicable
5. Ignition/Vehicle & All vehicle systems » Off
6. Replace the component: K20 Engine Control Module
7. Ignition » On / Vehicle » In Service Mode

Note: If both controller options below are listed, select K20 Engine and K71 Transmission Control Modules.

8. Perform the SPS function:
   - K20 Engine Control Module— Follow the on-screen instructions.
   - K71 Transmission Control Module— Follow the on-screen instructions.
9. Clear DTCs after programming is complete. Clearing powertrain DTCs will set the Inspection/ Maintenance (I/M) system status indicators to No.
10. Perform the SPS function: Immobilizer Learn— If equipped .

    Refer to: [Link target (target-id 158692-) not found]

Note: If both controller options below are listed, select K20 Engine Control Module.

11. Perform the SPS function: K20 Engine Control ModuleSetup— Configuration

    Perform any adjustment, programming or setup procedures that are required when a component or module is removed or replaced. Follow the on-screen instructions.
12. Perform the scan tool learn/reset function:
    - Air Cleaner Monitor Setup— If equipped
    - Barometric Pressure Sensor Reset— If equipped
    - Engine Oil Life Remaining
    - Fuel Filter Life Remaining— If equipped
    - Fuel Pressure Regulator Learn— If equipped
    - Fuel Rail Pressure Relief Valve Learned Values Reset— If equipped
    - Fuel injector flow identifiers— If equipped
    - Intake System Learned Values Reset— If equipped
    - Throttle Body Idle Air Flow Compensation Reset
    - Turbocharger Wastegate Learn— If equipped
    - Turbocharger/Supercharger Boost Control Initial Position Learn— If equipped
13. Perform the scan tool function: Clear DTCs
14. Ignition/Vehicle & All vehicle systems » Off
15. Operate the vehicle within the conditions of the customer's concern.

Reprogram Control Module

To reprogram an existing K20 Engine Control Module, perform the following procedure:

1. Access the Service Programming System and follow the on-screen instructions for the control module: K20 Engine Control Module
2. Ignition » On / Vehicle » In Service Mode

Note: If both controller options below are listed, select K20 Engine and K71 Transmission Control Modules.

3. Perform the SPS function:
   - K20 Engine Control Module— Follow the on-screen instructions.
   - K71 Transmission Control Module— Follow the on-screen instructions.
4. Perform the scan tool function: Clear DTCs
5. Perform the scan tool learn/reset function:
   - Barometric Pressure Sensor Reset— If equipped
   - Fuel Pressure Regulator Learn— If equipped
   - Fuel Rail Pressure Relief Valve Learned Values Reset— If equipped
   - Intake System Learned Values Reset— If equipped
   - Throttle Body Idle Air Flow Compensation Reset
   - Turbocharger Wastegate Learn— If equipped
   - Turbocharger/Supercharger Boost Control Initial Position Learn— If equipped
6. Ignition/Vehicle & All vehicle systems » Off
7. Operate the vehicle within the conditions of the customer's concern.

Unsuccessful Programming Recovery

If programming a control module is not successful, perform the following procedure:

1. Verify the control module, data link connector and programming tool connections are secure and the tool software is up to date.
2. Ignition » On / Vehicle » In Service Mode
3. Access the Service Programming System and follow the on-screen instructions for the control module: K20 Engine Control Module

Note: If both controller options below are listed, select K20 Engine and K71 Transmission Control Modules.

4. Perform the SPS function:
   - K20 Engine Control Module— Follow the on-screen instructions.
   - K71 Transmission Control Module— Follow the on-screen instructions.
5. Perform the scan tool function: Clear DTCs

6. Ignition/Vehicle » Off — For greater than 1 min
7. Ignition » On / Vehicle » In Service Mode
8. Verify the control module programming is successful.

⇒ **If the programming is not successful**

8.1. Ignition/Vehicle » Off — For greater than 1 min

8.2. Ignition » On / Vehicle » In Service Mode

Note: If both controller options below are listed, select K20 Engine and K71 Transmission Control Modules.

8.3. Perform the SPS function:

- K20 Engine Control Module— Follow the on-screen instructions.
- K71 Transmission Control Module— Follow the on-screen instructions.

⇒ If the programming is not successful Replace the appropriate component: K20 Engine Control Module orK71 Transmission Control Module

⇓ If the programming is successful

8.4. All OK.

⇓ **If the programming is successful**

9. All OK.

Repair Instructions

Perform the *Diagnostic Repair Verification 2-375* after completing the repair.

Control Module References 2-4 for control module replacement, programming and setup.

K212 Gear Shift Control Module: Programming and Setup

Note:

- DO NOT program a control module unless directed to by a service procedure or a service bulletin. If the control module is not properly configured with the correct calibration software, the control module will not control all of the vehicle features properly.
- Ensure the programming tool is equipped with the latest software and is securely connected to the data link connector. If there is an interruption during programming, programming failure or control module damage may occur.
- Stable battery voltage is critical during programming. Any fluctuation, spiking, over voltage or loss of voltage will interrupt programming. When required, install a battery maintainer or power supply that provides a steady and stable voltage. Do not use a battery charger, as charging voltage will often fluctuate when connected to the vehicle. This may interrupt programing. If a battery maintainer is not available, connect a fully charged 12 V jumper or booster pack disconnected from the AC voltage supply.
- Turn OFF or disable systems that may put a load on the vehicles battery such as; interior lights, exterior lights (including daytime running lights), HVAC, radio, etc.
- During the programming procedure, follow the SPS prompts for the correct ignition switch position.
- Clear DTCs after programming is complete. Clearing powertrain DTCs will set the Inspection/ Maintenance (I/M) system status indicators to NO.

Replace and Program Control Module or Reprogram Control Module

1. Access the Service Programming System (SPS) and follow the on-screen instructions.
2. On the SPS Supported Controllers screen, select K212 Gear Shift Control Module - Programming and follow the on-screen instructions.
3. Clear DTCs.
4. If DTCs U1962 and U1972 set, perform Serial Data Authentication Configuration procedure: *Serial Data Authentication Configuration 2-59*.
5. All OK.

Unsuccessful Programming Recovery

In the event of an interrupted or unsuccessful programming event, perform the following steps:

1. Ignition ON. Ensure the control module, DLC and programming tool connections are secure and the SPS software is up to date.
2. Verify the control module can be reprogrammed.

⇒ **If the control module cannot be reprogrammed**

2.1. Ignition OFF for one minute, ignition ON.

2.2. Verify the control module can be reprogrammed.

⇒ If the control module cannot be reprogrammed, replace the control module.

⇓ If the control module can be reprogrammed.

2.3. All OK.

⇓ **If the control module can be reprogrammed**

3. All OK.

Repair Instructions

Perform the *Diagnostic Repair Verification 2-375* after completing the repair.

Control Module References 2-4 for Control Module replacement, programming and setup

K219 Lighting Control Module: Programming and Setup

Note:

- DO NOT program a control module unless directed to by a service procedure or a service bulletin. If the control module is not properly configured with the correct calibration software, the control module will not control all of the vehicle features properly.
- Ensure the programming tool is equipped with the latest software and is securely connected to the data link connector. If there is an interruption during programming, programming failure or control module damage may occur.
- Stable battery voltage is critical during programming. Any fluctuation, spiking, over voltage or loss of voltage will interrupt programming. When required install the *EL-49642* SPS Programming Support Tool to maintain system voltage. If not available, connect a fully charged 12 V jumper or booster pack disconnected from the AC voltage supply. DO NOT connect a battery charger.
- Turn OFF or disable systems that may put a load on the vehicles battery such as; interior lights, exterior lights (including daytime running lights), HVAC, radio, etc.
- During the programming procedure, follow the SPS prompts for the correct ignition switch position.
- Clear DTCs after programming is complete. Clearing powertrain DTCs will set the Inspection/ Maintenance (I/M) system status indicators to NO.

Replace and Program Control Module

To program a replacement control module, perform the following procedure:

1. Access the Service Programming System (SPS) and follow the on-screen instructions.
2. On the SPS Supported Controllers screen, under Select Controller, select K219 Lighting Control Module.
3. On the SPS Supported Controllers screen, under Select Function / Sequence, select Programming and follow on screen instructions.
4. On the SPS Supported Controllers screen, under Select Function / Sequence, select Setup and follow the on-screen instructions.
5. Clear All DTCs.

Reprogram Control Module

Do not reprogram the lighting control module, unless directed by a service procedure, or a service bulletin.

To reprogram an existing control module, perform the following procedure:

1. Access the Service Programming System (SPS) and follow the on-screen instructions.
2. On the SPS Supported Controllers screen, under Select Controller, select K219 Lighting Control Module.
3. On the SPS Supported Controllers screen, under Select Function / Sequence, select Programming and follow on screen instructions.
4. Clear All DTCs.

Unsuccessful Programming Recovery

Note:

- Ensure the *EL-52100* (MDI 2) is used when programming the vehicle. Using the EL-47955 (MDI) will result in a programming failure.
- It may be necessary to use another *EL-52100* (MDI 2) and/or cables to verify proper operation to eliminate the possibility of faulty equipment.
- If Ethernet programming fails, ensure there is no fault in the Ethernet circuits between the X84 Data Link Connector and K56 Serial Data Gateway Module. Refer to [Link target (target-id 300812-) not found] to diagnose these Ethernet circuits.

In the event of an interrupted or unsuccessful programming event, perform the following steps:

1. Exit Service Programming Systems and disconnect all programming equipment from the vehicle.
2. Disconnect all battery voltage or ignition voltage sources from the control module. All voltage sources must be removed for a minimum of 10 min. This can be done several ways and should be completed by using the least intrusive way. This can vary depending on vehicle and control module location and can be done by one of the options listed below:
   - Removing all fuses supplying battery voltage and ignition voltage to the control module.
   - Disconnecting all harness connectors from the control module.

Warning: Always ensure the Battery Maintenance Mode is inactive before disconnecting the low voltage 12 volt battery (or batteries). This mode can be active with the ignition off, regardless of whether the vehicle charging cord is plugged in or not. When this mode is active, the on-board high voltage battery charger(s) will energize the 12 volt

battery cables and charge the 12 volt battery (or batteries). Disconnecting any battery cables while this mode is active may result in an electrical shock or a burn from hot battery cable leads.

- Check the 12 V battery voltage with a digital multimeter before disconnecting any battery cables leads. If the voltage is 13.5 V or above, the Battery Maintenance Mode is active. The technician must wait for the T18 Battery Charger to deactivate before disconnecting the battery negative cable. For more information, refer to *Charging System Description and Operation 4-9* . With Battery Maintenance Mode inactive, perform a 12 V battery disconnect by disconnecting the battery negative cable. Refer to [Link target (target-id 37733-) not found] .

3. Reconnect all Battery voltage and Ignition voltage sources to the Control Module.
4. Close down the current session of Techline Connect and reopen a new session.
5. Verify the control module, data link connector, and programming tool connections are secure and the tool software is up to date.
6. Ignition/Vehicle OFF, ensure that the key fob is inside the vehicle and not moved for the duration of the programming to prevent an inadvertent power mode change during programming.
7. Access the Service Programming System (SPS) and follow the on-screen instructions for the K219 Lighting Control Module.
8. Verify the control module can be programmed.

⇒ **If the control module can not be programmed**

8.1. Ignition ON/Vehicle in Service Mode for 1 min.

8.2. Ignition/Vehicle OFF.

8.3. Access SPS and follow the on-screen instructions for the K219 Lighting Control Module.

Note: If programming is still not successful after the second programming attempt, check the following:

- For facilities using an internet firewall, ensure firewall settings are not blocking file downloads and/or require elevated rights.
- For United States and Canada GM dealers, the appropriate firewall settings can be found in the GM DEALER INFRASTRUCTURE & SECURITY GUIDELINES (DISG) section 2.d.vii.

8.4. Verify the control module can be programmed.

⇒ If the control module can not be programmed, replace the K219 Lighting Control Module.

⇓ If the control module can be programmed

8.5. Clear DTCs.

⇓ **If the control module can be programmed**

9. Clear DTCs.

Repair Instructions

Perform the *Diagnostic Repair Verification 2-375* after completing the repair.

Control Module References 2-4 for control module replacement, programming and setup

K29FV Front Seat Heater Vent Control Module: Programming and Setup

This device does not require programming or setup.

K29RV Rear Seat Heater Vent Control Module: Programming and Setup

This device does not require programming or setup.

K36 Restraints Control Module: Programming and Setup

Diagnostic Instructions

- Perform the *Diagnostic System Check - Vehicle 2-296* prior to using this diagnostic procedure.
- Review the description of *Strategy Based Diagnosis 2-286*

Note:

- Do NOT program a control module unless directed to by a service procedure or a service bulletin. If the control module is not properly configured with the correct calibration software, the control module will not control all of the vehicle features properly.
- Verify the programming tool is equipped with the latest software and is securely connected to the data link connector. If there is an interruption during programming, programming failure or control module damage may occur.
- Stable battery voltage is critical during programming. Any fluctuation, spiking, over voltage or loss of voltage will interrupt programming. When required, install a battery maintainer or power supply that provides a steady and stable voltage. Do not use a battery charger, as charging voltage will often fluctuate when connected to the vehicle. This may interrupt programming. If a battery maintainer is not available, connect a fully charged 12 V jumper or booster pack disconnected from the AC voltage supply.
- Turn OFF or disable systems that may put a load on the vehicle's battery such as interior lights, exterior lights (including daytime running lights), HVAC, radio, etc.
- Programming must begin with the Ignition/Vehicle OFF. Programming will direct the appropriate

control module(s) to change power mode as needed during the procedure, independent of the vehicle's power mode.

- To prevent programming failure due to unintended wireless drops, it is recommended that a wired MDI 2 connection be used when programming the control module.
- Clear DTCs after programming is complete. Clearing powertrain DTCs will set the Inspection/ Maintenance (I/M) system status indicators to No.

Reference Information

Special Tools

EL-52100 Multiple Diagnostic Interface 2 (MDI 2)

Programming an Existing or New Control Module

To program an existing or new control module, perform the following procedure:

Note:

- Ensure the *EL-52100* (MDI 2) is used when programming the vehicle and verify it is working properly. Using the EL-47955 (MDI) will result in a programming failure.
- Verify all control modules are connected and communicating before attempting to program the K36 Restraints Control Module.
- Verify the key fob is inside the vehicle. If the key fob is not inside the vehicle, the serial data authentication configuration procedure which runs automatically at the end of the programming step will fail even though the programming appears to run successfully. If the serial data authentication configuration procedure fails, DTC U1962 will set and/or the setup step will fail or be incomplete.

1. Place the vehicle on level ground (the vehicle must be level or the IMU setup may fail)
2. Ignition/Vehicle OFF, ensure that the key fob is inside the vehicle and not moved for the duration of the programming to prevent an inadvertent power mode change during programming.
3. Access the Service Programming System (SPS) and follow the on-screen instructions for the K36 Restraints Control Module.
4. Perform the SPS function: **Programming** and follow the on-screen instructions.
5. Perform the SPS function: **Setup** and follow the on-screen instructions.
6. Clear DTCs.

Unsuccessful Programming Recovery

Note:

- Ensure the *EL-52100* (MDI 2) is used when programming the vehicle. Using the EL-47955 (MDI) will result in a programming failure.
- It may be necessary to use another *EL-52100* (MDI 2) and/or cables to verify proper operation to eliminate the possibility of faulty equipment.
- If Ethernet programming fails, ensure there is no fault in the Ethernet circuits between the X84 Data Link Connector and K56 Serial Data Gateway Module. Refer to [Link target (target-id 300812-) not found] to diagnose these Ethernet circuits.

In the event of an interrupted or unsuccessful programming event, perform the following steps:

1. Exit Service Programming System (SPS) and disconnect all programming equipment from the vehicle.
2. Disconnect all battery voltage or ignition voltage sources from the control module.

Note: All voltage sources must be removed for a minimum of 10 min. This can be done several ways and should be completed by using the least intrusive way. This can vary depending on vehicle and control module location and can be done by one of the options listed below:

- Removing all fuses supplying battery voltage and ignition voltage to the control module.
- Disconnecting all harness connectors from the control module.
- Performing a 12 V battery disconnect by disconnecting the battery negative cable. Refer to [Link target (target-id 37733-) not found] .

3. Reconnect all battery voltage and ignition voltage sources to the control module.
4. Close down the current session of Techline Connect and reopen a new session.
5. Verify the control module, data link connector, and programming tool connections are secure and the tool software is up to date.
6. Ignition/Vehicle OFF, ensure that the key fob is inside the vehicle and not moved for the duration of the programming to prevent an inadvertent power mode change during programming.
7. Access the Service Programming System (SPS) and follow the on-screen instructions for the control module.
8. Verify the control module can be programmed.

⇒ **If the control module can not be programmed**

8.1. Ignition ON/Vehicle in Service Mode for 1 min.

8.2. Ignition/Vehicle OFF.

8.3. Access SPS and follow the on-screen instructions for the control module.

Note: If programming is still not successful after the second programming attempt, check the following:

- For facilities using an internet firewall, ensure firewall settings are not blocking file downloads and/or require elevated rights.
- For United States and Canada GM dealers, the appropriate firewall settings can be found in the GM DEALER INFRASTRUCTURE & SECURITY GUIDELINES (DISG) section 2.d.vii.

8.4. Verify the control module can be programmed.

⇒ If the control module can not be programmed, replace the control module.

⇓ If the control module can be programmed

8.5. Clear DTCs.

⇓ **If the control module can be programmed**

9. Clear DTCs.

Repair Instructions

Perform the *Diagnostic Repair Verification 2-375* after completing the repair.

Control Module References 2-4 for control module replacement, programming, and setup.

K38 Chassis Control Module: Programming and Setup

Note:

- DO NOT program a control module unless directed to by a service procedure or a service bulletin. If the control module is not properly configured with the correct calibration software, the control module will not control all of the vehicle features properly.
- Ensure the programming tool is equipped with the latest software and is securely connected to the data link connector. If there is an interruption during programming, programming failure or control module damage may occur.
- Stable battery voltage is critical during programming. Any fluctuation, spiking, over voltage or loss of voltage will interrupt programming. When required, install a battery maintainer or power supply that provides a steady and stable voltage. Do not use a battery charger, as charging voltage will often fluctuate when connected to the vehicle. This may interrupt programming. If a battery maintainer is not available, connect a fully charged 12 V jumper or booster pack disconnected form the AC voltage supply.
- Turn OFF or disable systems that may put a load on the vehicles battery such as; interior lights, exterior lights (including daytime running lights), HVAC, radio, etc.
- During the programming procedure, follow the SPS prompts for the correct ignition switch position.
- Clear DTCs after programming is complete. Clearing powertrain DTCs will set the Inspection/ Maintenance (I/M) system status indicators to NO.

Replace and Program Control Module or Reprogram Control Module

To program a replacement or an existing control module, perform the following procedure:

1. Access the Service Programming System (SPS) and follow the on-screen instructions.
2. On the SPS Supported Controllers screen, select K38 Chassis Control Module - Programming and follow the on-screen instructions.
3. Clear DTCs.
4. With a scan tool, perform the Suspension Sensor Trim Height Calibration, if applicable.

Unsuccessful Programming Recovery

In the event of an interrupted or unsuccessful programming event, perform the following steps:

1. Ignition ON. Ensure the control module, DLC and programming tool connections are secure and the SPS software is up to date.
2. Verify the control module can be reprogrammed.

⇒ **If the control module cannot be reprogrammed**

2.1. Ignition OFF for one minute, ignition ON.

2.2. Verify the control module can be reprogrammed.

⇒ If the control module cannot be reprogrammed, replace the control module.

⇓ If the control module can be reprogrammed.

2.3. All OK.

⇓ **If the control module can be reprogrammed**

3. All OK.

Repair Instructions

Perform the *Diagnostic Repair Verification 2-375* after completing the repair.

Control Module References 2-4 for Control Module replacement, programming and setup.

K40D Driver Seat Adjuster Memory Module: Programming and Setup

Note:

- DO NOT program a control module unless directed to by a service procedure or a service bulletin. If

the control module is not properly configured with the correct calibration software, the control module will not control all of the vehicle features properly.

- Ensure the programming tool is equipped with the latest software and is securely connected to the data link connector. If there is an interruption during programming, programming failure or control module damage may occur.
- Stable battery voltage is critical during programming. Any fluctuation, spiking, over voltage or loss of voltage will interrupt programming. When required, install a battery maintainer or power supply that provides a steady and stable voltage. Do not use a battery charger, as charging voltage will often fluctuate when connected to the vehicle. This may interrupt programing. If a battery maintainer is not available, connect a fully charged 12 V jumper or booster pack disconnected from the AC voltage supply.
- Turn OFF or disable systems that may put a load on the vehicles battery such as; interior lights, exterior lights (including daytime running lights), HVAC, radio, etc.
- During the programming procedure, follow the SPS prompts for the correct ignition switch position.
- Clear DTCs after programming is complete. Clearing powertrain DTCs will set the Inspection/ Maintenance (I/M) system status indicators to NO.

Replace and Program Control Module or Reprogram Control Module

To program a replacement or an existing control module, perform the following procedure:

1. Access the Service Programming System (SPS) and follow the on-screen instructions.
2. On the SPS Supported Controllers screen, select K40D Driver Seat Adjuster Memory Module - Programming and follow the on-screen instructions.
3. Clear DTCs.
4. Move the seat to a central, middle range position, then perform the memory store operation for memory “1”, “2”, and “Exit” or “3” if equipped. Refer to the Owner Manual for storing memory seat positions.

Unsuccessful Programming Recovery

In the event of an interrupted or unsuccessful programming event, perform the following steps:

1. Ensure the control module, DLC and programming tool connections are secure and the SPS software is up to date.
2. Verify the control module can be reprogrammed.

⇒ **If the control module cannot be reprogrammed**

2.1. Disconnect the battery.

2.2. Wait 1 minute, reconnect the battery.

2.3. Verify the control module can be reprogrammed.

⇒ If the control module cannot be reprogrammed, replace the control module.

⇓ If the control module can be reprogrammed.

2.4. All OK.

⇓ **If the control module can be reprogrammed**

3. All OK.

Repair Instructions

Perform the *Diagnostic Repair Verification 2-375* after completing the repair.

Control Module References 2-4 for Control Module replacement, programming and setup

K40P Passenger Seat Adjuster Memory Module: Programming and Setup

Note:

- DO NOT program a control module unless directed to by a service procedure or a service bulletin. If the control module is not properly configured with the correct calibration software, the control module will not control all of the vehicle features properly.
- Ensure the programming tool is equipped with the latest software and is securely connected to the data link connector. If there is an interruption during programming, programming failure or control module damage may occur.
- Stable battery voltage is critical during programming. Any fluctuation, spiking, over voltage or loss of voltage will interrupt programming. When required, install a battery maintainer or power supply that provides a steady and stable voltage. Do not use a battery charger, as charging voltage will often fluctuate when connected to the vehicle. This may interrupt programing. If a battery maintainer is not available, connect a fully charged 12 V jumper or booster pack disconnected from the AC voltage supply.
- Turn OFF or disable systems that may put a load on the vehicles battery such as; interior lights, exterior lights (including daytime running lights), HVAC, radio, etc.
- During the programming procedure, follow the SPS prompts for the correct ignition switch position.
- Clear DTCs after programming is complete. Clearing powertrain DTCs will set the Inspection/ Maintenance (I/M) system status indicators to NO.

Replace and Program Control Module or Reprogram Control Module

To program a replacement or an existing control module, perform the following procedure:

1. Access the Service Programming System (SPS) and follow the on-screen instructions.
2. On the SPS Supported Controllers screen, select K40P Passenger Seat Adjuster Memory Module - Programming and follow the on-screen instructions.
3. Clear DTCs.
4. Move the seat to a central, middle range position, then perform the memory store operation for memory “1”, “2”, and “Exit” or “3” if equipped. Refer to the Owner Manual for storing memory seat positions.

Unsuccessful Programming Recovery

In the event of an interrupted or unsuccessful programming event, perform the following steps:

1. Ensure the control module, DLC and programming tool connections are secure and the SPS software is up to date.
2. Verify the control module can be reprogrammed.

⇒ **If the control module cannot be reprogrammed**

2.1. Disconnect the battery.

2.2. Wait 1 minute, reconnect the battery.

2.3. Verify the control module can be reprogrammed.

⇒ If the control module cannot be reprogrammed, replace the control module.

⇓ If the control module can be reprogrammed.

2.4. All OK.

⇓ **If the control module can be reprogrammed**

3. All OK.

Repair Instructions

Perform the *Diagnostic Repair Verification 2-375* after completing the repair.

Control Module References 2-4 for Control Module replacement, programming and setup

K43 Power Steering Control Module: Programming and Setup

Note:

- DO NOT program a control module unless directed to by a service procedure or a service bulletin. If the control module is not properly configured with the correct calibration software, the control module will not control all of the vehicle features properly.
- Ensure the programming tool is equipped with the latest software and is securely connected to the data link connector. If there is an interruption during programming, programming failure or control module damage may occur.
- Stable battery voltage is critical during programming. Any fluctuation, spiking, over voltage or loss of voltage will interrupt programming. When required, install a battery maintainer or power supply that provides a steady and stable voltage. Do not use a battery charger, as charging voltage will often fluctuate when connected to the vehicle. This may interrupt programing. If a battery maintainer is not available, connect a fully charged 12 V jumper or booster pack disconnected from the AC voltage supply.
- Turn OFF or disable systems that may put a load on the vehicles battery such as; interior lights, exterior lights (including daytime running lights), HVAC, radio, etc.
- During the programming procedure, follow the SPS prompts for the correct ignition switch position.
- Clear DTCs after programming is complete. Clearing powertrain DTCs will set the Inspection/ Maintenance (I/M) system status indicators to NO.

Diagnostic Aids

The Electric Power Steering Control Module is part of the power steering assist motor assembly and is electronically paired with the steering gear's sensors.

Replace and Program or Reprogramming Control Module

To program a replacement control module, perform the following procedure:

1. Ignition/Vehicle OFF, ensure that the key fob is inside the vehicle and not moved for the duration of the programming to prevent an inadvertent power mode change during programming.
2. Access the Service Programming System (SPS) and follow the on-screen instructions.
3. On the SPS Supported Controllers screen, select K43 Power Steering Control Module - Programming and follow the on-screen instructions.
4. On the SPS Supported Controllers screen, select K43 Power Steering Control Module - Setup and follow the on-screen instructions.
5. If the Setup fails, check for DTC U1962. If this DTC is set, perform the Serial Data Authentication Configuration procedure. Then repeat the Setup step.
6. Clear DTCs.

Unsuccessful Programming Recovery

In the event of an interrupted or unsuccessful programming event, perform the following steps:

1. Ignition/Vehicle ON. Ensure the control module, DLC and programming tool connections are secure and the SPS software is up to date.
2. Verify the control module can be reprogrammed.

⇒ **If the control module cannot be reprogrammed**

2.1. Ignition/Vehicle OFF for one minute, Ignition/Vehicle ON.

2.2. Verify the control module can be reprogrammed.

⇒ If the control module cannot be reprogrammed, replace the control module.

⇓ If the control module can be reprogrammed.

2.3. All OK.

⇓ **If the control module can be reprogrammed**

3. All OK.

Repair Instructions

Perform the *Diagnostic Repair Verification 2-375* after completing the repair.

Control Module References 2-4 for control module replacement, programming and setup

K56 Serial Data Gateway Module: Programming and Setup

Note:

- Do NOT program a control module unless directed to by a service procedure or a service bulletin. If the control module is not properly configured with the correct calibration software, the control module will not control all of the vehicle features properly.
- Verify the programming tool is equipped with the latest software and is securely connected to the data link connector. If there is an interruption during programming, programming failure or control module damage may occur.
- Stable battery voltage is critical during programming. Any fluctuation, spiking, over voltage or loss of voltage will interrupt programming. When required, install a battery maintainer or power supply that provides a steady and stable voltage. Do not use a battery charger, as charging voltage will often fluctuate when connected to the vehicle. This may interrupt programming. If a battery maintainer is not available, connect a fully charged 12 V jumper or booster pack disconnected from the AC voltage supply.
- Turn OFF or disable systems that may put a load on the vehicle's battery such as interior lights, exterior lights (including daytime running lights), HVAC, radio, etc.
- Programming must begin with the Ignition/Vehicle OFF. Programming will direct the appropriate control module(s) to change power mode as needed during the procedure, independent of the vehicle’s power mode.
- To prevent programming failure due to unintended wireless drops, it is recommended that a wired MDI 2 connection be used when programming the control module.
- Clear DTCs after programming is complete. Clearing powertrain DTCs will set the Inspection/Maintenance (I/M) system status indicators to No.

Reference Information

Special Tools

EL-52100 Multiple Diagnostic Interface 2 (MDI 2)

Programming a New Control Module

To program a replacement K56 Serial Data Gateway Module, perform the following procedure:

Note:

- Ensure the *EL-52100* (MDI 2) is used when programming the vehicle and verify it is working properly. Using the EL-47955 (MDI) will result in a programming failure.
- Verify all control modules are connected and communicating before attempting to program the K56 Serial Data Gateway Module.
- Verify the key fob is inside the vehicle. If the key fob is not inside the vehicle, the serial data authentication configuration procedure which runs automatically at the end of the programming step will fail even though the programming appears to run successfully. If the serial data authentication configuration procedure fails, DTC U1962 will set and/or the setup step will fail or be incomplete.
- Begin with the vehicle in vehicle OFF power mode. The Service Programming System will power mode the vehicle.

1. Ignition/Vehicle OFF, ensure that the key fob is inside the vehicle and not moved for the duration of the programming to prevent an inadvertent power mode change during programming.
2. Access the Service Programming System (SPS) and follow the on-screen instructions.
3. On the SPS Supported Controllers screen, select K56 Serial Data Gateway Module - Programming and follow the on-screen instructions.

4. On the SPS Supported Controllers screen, select K56 Serial Data Gateway Module - Setup and follow the on-screen instructions.

Note: If an error message indicates that a module is missing after the learn procedure is complete, diagnose that module to make sure that it's connected and communicating and then perform the Programming and Learn procedures again.

5. Clear DTCs.

Programming an Existing Control Module

To program an existing K56 Serial Data Gateway Module, perform the following procedure:

Note:

- Ensure the *EL-52100* (MDI 2) is used when programming the vehicle and verify it is working properly. Using the EL-47955 (MDI) will result in a programming failure.
- Verify all control modules are connected and communicating before attempting to program the K56 Serial Data Gateway Module.
- Verify the key fob is inside the vehicle. If the key fob is not inside the vehicle, the serial data authentication configuration procedure which runs automatically at the end of the programming step will fail even though the programming appears to run successfully. If the serial data authentication configuration procedure fails, DTC U1962 will set and/or the setup step will fail or be incomplete.
- Begin with the vehicle in vehicle OFF power mode. The Service Programming System will power mode the vehicle.

1. Ignition/Vehicle OFF, ensure that the key fob is inside the vehicle and not moved for the duration of the programming to prevent an inadvertent power mode change during programming.
2. Access the Service Programming System (SPS) and follow the on-screen instructions.
3. On the SPS Supported Controllers screen, select K56 Serial Data Gateway Module - Programming and follow the on-screen instructions.
4. Clear DTCs.

Unsuccessful Programming Recovery

Note:

- Ensure the *EL-52100* (MDI 2) is used when programming the vehicle. Using the EL-47955 (MDI) will result in a programming failure.
- It may be necessary to use another *EL-52100* (MDI 2) and/or cables to verify proper operation to eliminate the possibility of faulty equipment.
- If Ethernet programming fails, ensure there is no fault in the Ethernet circuits between the X84 Data Link Connector and K56 Serial Data Gateway Module. Refer to [Link target (target-id 300812-) not found] to diagnose these Ethernet circuits.

In the event of an interrupted or unsuccessful programming event, perform the following steps:

1. Exit Service Programming System (SPS) and disconnect all programming equipment from the vehicle.
2. Disconnect all battery voltage or ignition voltage sources from the K56 Serial Data Gateway Module. All voltage sources must be removed for a minimum of 10 min. This can be done several ways and should be completed by using the least intrusive way. This can vary depending on vehicle and control module location and can be done by one of the options listed below:
   - Removing all fuses supplying battery voltage and ignition voltage to the control module.
   - Disconnecting all harness connectors from the control module.
   - Performing a 12 V battery disconnect by disconnecting the battery negative cable. Refer to [Link target (target-id 37733-) not found] .
3. Reconnect all battery voltage and ignition voltage sources to the K56 Serial Data Gateway Module.
4. Close down the current session of Techline Connect and reopen a new session.
5. Verify the K56 Serial Data Gateway Module, X84 Data Link Connector, and programming tool connections are secure and the tool software is up to date.
6. Ignition/Vehicle OFF, ensure that the key fob is inside the vehicle and not moved for the duration of the programming to prevent an inadvertent power mode change during programming.
7. Access the Service Programming System (SPS) and follow the on-screen instructions for the K56 Serial Data Gateway Module.
8. Verify the K56 Serial Data Gateway Module can be programmed.

⇒ **If the K56 Serial Data Gateway Module can not be programmed**

8.1. Ignition ON/Vehicle in Service Mode for 1 min.

8.2. Ignition/Vehicle OFF.

8.3. Access SPS and follow the on-screen instructions for the K56 Serial Data Gateway Module.

Note: If programming is still not successful after the second programming attempt, check the following:

- For facilities using an internet firewall, ensure firewall settings are not blocking file downloads and/or require elevated rights.
- For United States and Canada GM dealers, the appropriate firewall settings can be found in the GM DEALER INFRASTRUCTURE & SECURITY GUIDELINES (DISG) section 2.d.vii.

8.4. Verify the K56 Serial Data Gateway Module can be programmed.

⇒ If the K56 Serial Data Gateway Module can not be programmed, replace the K56 Serial Data Gateway Module.

⇓ If the K56 Serial Data Gateway Module can be programmed

8.5. Clear DTCs.

⇓ **If the K56 Serial Data Gateway Module can be programmed**

9. Clear DTCs.

Repair Instructions

Perform the Diagnostic Repair Verification after completing the repair: *Diagnostic Repair Verification 2-375*.

For control module replacement, programming, and setup, refer to: *Control Module References 2-4*.

K56U Special Purpose Vehicle Module: Programming and Setup

Note:

- DO NOT program a control module unless directed to by a service procedure or a service bulletin. If the control module is not properly configured with the correct calibration software, the control module will not control all of the vehicle features properly.
- Ensure the programming tool is equipped with the latest software and is securely connected to the data link connector. If there is an interruption during programming, programming failure or control module damage may occur.
- Stable battery voltage is critical during programming. Any fluctuation, spiking, over voltage or loss of voltage will interrupt programming. When required, install a battery maintainer or power supply that provides a steady and stable voltage. Do not use a battery charger, as charging voltage will often fluctuate when connected to the vehicle. This may interrupt programming. If a battery maintainer is not available, connect a fully charged 12 V jumper or booster pack disconnected form the AC voltage supply.
- Turn OFF or disable systems that may put a load on the vehicles battery such as; interior lights, exterior lights (including daytime running lights), HVAC, radio, etc.
- During the programming procedure, follow the SPS prompts for the correct ignition switch position.
- Clear DTCs after programming is complete. Clearing powertrain DTCs will set the Inspection/ Maintenance (I/M) system status indicators to NO.

Replace and Program Control Module or Reprogram Control Module

To program a replacement or an existing control module, Refer to*https://www.gmupfitter.com/*Then proceed to the following procedures:

1. Access the Service Programming System (SPS) and follow the on-screen instructions.
2. On the SPS Supported Controllers screen, select K56U Special Vehicle Purpose Module - Programming and follow the on-screen instructions.
3. Clear DTCs.

Unsuccessful Programming Recovery

In the event of an interrupted or unsuccessful programming event, perform the following steps:

1. Ignition ON. Ensure the control module, DLC and programming tool connections are secure and the SPS software is up to date.
2. Verify the control module can be reprogrammed.

⇒ **If the control module cannot be reprogrammed**

2.1. Ignition OFF for one minute, ignition ON.

2.2. Verify the control module can be reprogrammed.

⇒ If the control module cannot be reprogrammed, replace the control module.

⇓ If the control module can be reprogrammed.

2.3. All OK.

⇓ **If the control module can be reprogrammed**

3. All OK.

Repair Instructions

Perform the *Diagnostic Repair Verification 2-375* after completing the repair.

Control Module References 2-4 for control module replacement, programming and setup.

K60 Column Lock Module: Programming and Setup

Note:

- DO NOT program a control module unless directed to by a service procedure or a service bulletin. If the control module is not properly configured with the correct calibration software, the control module will not control all of the vehicle features properly.
- Ensure the programming tool is equipped with the latest software and is securely connected to the data link connector. If there is an interruption during programming, programming failure or control module damage may occur.
- Stable battery voltage is critical during programming. Any fluctuation, spiking, over voltage or loss of voltage will interrupt programming. When required, install a battery maintainer or power supply that provides a steady and stable voltage. Do not use a battery charger, as charging voltage will often fluctuate when connected to the vehicle. This may interrupt programing. If a battery maintainer is not available, connect a fully charged 12 V jumper or booster pack disconnected from the AC voltage supply.
- Turn OFF or disable systems that may put a load on the vehicles battery such as; interior lights, exterior lights (including daytime running lights), HVAC, radio, etc.
- During the programming procedure, follow the SPS prompts for the correct ignition switch position.
- Clear DTCs after programming is complete. Clearing powertrain DTCs will set the Inspection/ Maintenance (I/M) system status indicators to NO.

Replace and Program Column Lock Control Module

To program a replacement column lock control module, perform the following procedure:

Note: Before reprogramming, to ensure that the column lock password from the BCM is learned: turn ignition ON and then OFF, close all doors, and wait 5 minutes.

1. Ignition ON.
2. Access the Service Programming System (SPS) and follow the on-screen instructions.
3. If available, on the SPS Supported Controllers screen, select K60 Column Lock Control Module – Prepare Control Module For Removal and follow the on-screen instructions.

Note: The Prepare Control Module for Removal function can only be performed when communication with the old control module is still possible

4. Replace the Column Lock Module. Refer to: *Control Module References 2-4*
5. Ignition ON for 10 seconds, ignition OFF.
6. Close all doors and wait 5 minutes.
7. Ignition ON.
8. On the SPS Supported Controllers screen, select K60 Column Lock Control Module – Programming and follow the on-screen instructions.
9. Clear DTCs.

Reprogram Column Lock Control Module

Note: Before reprogramming, to ensure that the steering column lock password from the BCM is learned: turn ignition ON and then OFF, close all doors, and wait 5 minutes.

To reprogram an existing column lock control module, perform the following procedure:

1. Ignition ON for 10 seconds, ignition OFF.
2. Close all doors and wait 5 minutes.
3. Ignition ON.
4. Access the Service Programming System (SPS) and follow the on-screen instructions.
5. On the SPS Supported Controllers screen, select K60 Column Lock Control Module – Programming and follow the on-screen instructions.
6. Clear DTCs.

Unsuccessful Programming Recovery

In the event of an interrupted or unsuccessful programming event, perform the following steps:

1. Ignition ON. Ensure the control module, DLC and programming tool connections are secure and the SPS software is up to date.
2. Verify the control module can be reprogrammed.

⇒ **If the control module cannot be reprogrammed**

2.1. Ignition OFF for one minute, ignition ON.

2.2. Verify the control module can be reprog-rammed.

⇒ If the control module cannot be reprogrammed, replace the control module.

⇓ If the control module can be reprogrammed.

2.3. All OK.

⇓ **If the control module can be reprogrammed**

3. All OK.

Repair Instructions

Perform the *Diagnostic Repair Verification 2-375* after completing the repair.

Control Module References 2-4 for control module replacement, programming and setup

K61 Sunroof Control Module: Programming and Setup

Diagnostic Instructions

- Perform the *Diagnostic System Check - Vehicle 2-296* prior to using this diagnostic procedure.
- Review the description of *Strategy Based Diagnosis 2-286*

Note:

- Do NOT program a control module unless directed to by a service procedure or a service bulletin. If the control module is not properly configured with the correct calibration software, the control module will not control all of the vehicle features properly.
- Verify the programming tool is equipped with the latest software and is securely connected to the data link connector. If there is an interruption during programming, programming failure or control module damage may occur.
- Stable battery voltage is critical during programming. Any fluctuation, spiking, over voltage or loss of voltage will interrupt programming. When required, install a battery maintainer or power supply that provides a steady and stable voltage. Do not use a battery charger, as charging voltage will often fluctuate when connected to the vehicle. This may interrupt programming. If a battery maintainer is not available, connect a fully charged 12 V jumper or booster pack disconnected from the AC voltage supply.
- Turn OFF or disable systems that may put a load on the vehicle's battery such as interior lights, exterior lights (including daytime running lights), HVAC, radio, etc.
- Programming must begin with the Ignition/Vehicle OFF. Programming will direct the appropriate control module(s) to change power mode as needed during the procedure, independent of the vehicle’s power mode.
- To prevent programming failure due to unintended wireless drops, it is recommended that a wired MDI 2 connection be used when programming the control module.
- Clear DTCs after programming is complete. Clearing powertrain DTCs will set the Inspection/Maintenance (I/M) system status indicators to No.

Reference Information

Special Tools

EL-52100 Multiple Diagnostic Interface 2 (MDI 2)

Programming an Existing or New Control Module

This control module does not require SPS programming or any setup procedures.

Please refer to: [Link target (target-id 130156-) not found] for programming and setup.

Repair Instructions

Perform the *Diagnostic Repair Verification 2-375* after completing the repair.

Control Module References 2-4 for control module replacement, programming, and setup.

K67 Trailer Brake Control Module: Programming and Setup

Replace and Program ECU or Reprogram ECU

This ECU does not require SPS programming or any setup procedures.

K68 Trailer Lighting Control Module: Programming and Setup

The K68 Trailer Lamp Control Module does not require programming, but does require serial data authentication. Refer to: *Serial Data Authentication Configuration 2-59*.

K69 Transfer Case Control Module: Programming and Setup

Note:

- Do NOT program a control module unless directed to by a service procedure or a service bulletin. If the control module is not properly configured with the correct calibration software, the control module will not control all of the vehicle features properly.
- Verify the programming tool is equipped with the latest software and is securely connected to the data link connector. If there is an interruption during programming, programming failure or control module damage may occur.
- Stable battery voltage is critical during programming. Any fluctuation, spiking, over voltage or loss of voltage will interrupt programming. When required, install a battery maintainer or power supply that provides a steady and stable voltage. Do not use a battery charger, as charging voltage will often fluctuate when connected to the vehicle. This may interrupt programming. If a battery maintainer is not available, connect a fully charged 12 V jumper or booster pack disconnected from the AC voltage supply.
- Turn Off or disable systems that may put a load on the vehicle's battery. For example, interior lights, daytime running lights, HVAC, and radio.

- During the programming procedure, follow the Service Programming System (SPS) prompts for the correct ignition switch position.
- Clear DTCs after programming is complete. Clearing powertrain DTCs will set the Inspection/ Maintenance (I/M) system status indicators to No.

Programming an Existing or New Control Module

To program an existing or new control module, perform the following procedure:

1. Access SPS and follow the on-screen instructions for the control module: K69 Transfer Case Control Module
2. Perform the SPS function: K69 Transfer Case Control Module — Prepare Control Module for Removal
3. Perform the SPS function: K69 Transfer Case Control Module — Programming
4. Select Serial Data Authentication Configuration button (located to the left of the SPS supported controllers list or to the bottom right of the Techline Connect) and follow the on-screen instructions.
5. Perform the SPS function: K69 Transfer Case Control Module — Setup
6. Clear DTCs.
7. Perform the scan tool function: Range Actuator Learn

   Refer to: [Link target (target-id 304015-) not found]

Unsuccessful Programming Recovery

If programming a control module is not successful, perform the following procedure:

1. Verify the control module, data link connector and programming tool connections are secure and the tool software is up to date.
2. Perform the SPS function: K69 Transfer Case Control Module — Programming

   Verify the control module programming is successful.

⇒ **If the programming is not successful**

   2.1. Disconnect the battery.

   2.2. Wait 60 s before proceeding to the next step.

   2.3. Connect the battery.

   2.4. Perform the SPS function: K69 Transfer Case Control Module — Programming

⇒ If the programming is not successful » Replace the component: K69 Transfer Case Control Module

⇓ If the programming is successful

   2.5. Select Serial Data Authentication Configuration button (located to the left of the SPS supported controllers list or to the bottom right of the Techline Connect) and follow the on-screen instructions.

   2.6. Perform the SPS function: K69 Transfer Case Control Module — Setup

⇒ If the programming is not successful » Replace the component: A16 Transfer Case Four Wheel Drive Actuator

   Perform the SPS function: K69 Transfer Case Control Module — Setup

⇓ If the procedure was successful

   2.7. Perform the scan tool function: Range Actuator Learn

   Refer to: [Link target (target-id 304015-) not found]

   2.8. All OK.

⇓ **If the programming is successful**

3. Select Serial Data Authentication Configuration button (located to the left of the SPS supported controllers list or to the bottom right of the Techline Connect) and follow the on-screen instructions.
4. Perform the SPS function: K69 Transfer Case Control Module — Setup
5. Clear DTCs after programming is complete. Clearing powertrain DTCs will set the Inspection/ Maintenance (I/M) system status indicators to No.
6. Perform the scan tool function: Range Actuator Learn

   Refer to: [Link target (target-id 304015-) not found]
7. All OK.

Repair Instructions

Perform the Diagnostic Repair Verification after completing the repair: *Diagnostic Repair Verification 2-375*

For control module replacement, programming, and setup refer to: *Control Module References 2-4*

K71 Transmission Control Module: Programming and Setup (10L80 (MHS, MQC))

Diagnostic Instructions

- Perform the Diagnostic System Check prior to using this diagnostic procedure: *Diagnostic System Check - Vehicle 2-296*
- Review the description of Strategy Based Diagnosis: *Strategy Based Diagnosis 2-286*

Note:

- Do NOT program a control module unless directed to by a service procedure or a service bulletin. If the control module is not properly configured with the correct calibration software, the control module will not control all of the vehicle features properly.
- Verify the programming tool is equipped with the latest software and is securely connected to the data link connector. If there is an interruption during programming, programming failure or control module damage may occur.
- Stable battery voltage is critical during programming. Any fluctuation, spiking, over voltage or loss of voltage will interrupt programming. When required, install a battery maintainer or power supply that provides a steady and stable voltage. Do not use a battery charger, as charging voltage will often fluctuate when connected to the vehicle. This may interrupt programming. If a battery maintainer is not available, connect a fully charged 12 V jumper or booster pack disconnected from the AC voltage supply.
- Turn Off or disable systems that may put a load on the vehicle's battery. For example, interior lights, daytime running lights, HVAC, and radio.
- During the programming procedure, follow the Service Programming System (SPS) prompts for the correct ignition switch position.
- Clear DTCs after programming is complete. Clearing powertrain DTCs will set the Inspection/ Maintenance (I/M) system status indicators to No.

Reference Information

Special Tools
<sptool><sptool-no>EL-49642</sptool-no><sptool-desc>SPS Programming Support Tool</sptool-desc></sptool>

Equivalent regional tools: *Special Tools 2-72*

Programming an Existing or New Control Module

To program an existing or new control module, perform the following procedure:

1. Install the special tool: <sptool><sptool-no>EL-49642</sptool-no><sptool-desc>SPS Programming Support Tool</sptool-desc></sptool>
2. Ignition » On / Vehicle » In Service Mode
3. Perform one of the following SPS Programming functions:

Note: If both controller options below are listed, select K20/K71 Engine and Transmission Control Modules.

- K20/K71 Engine and Transmission Control Modules and follow the on-screen instructions.
- K71 Transmission Control Module and follow on-screen instructions.

3.1. Select» Programming

3.2. Select» MCVM Operations— If applicable

3.3. Ignition/Vehicle » Off — For greater than 2 min

3.4. Select» Setup— Follow the on-screen instructions.

4. Clear DTCs after programming is complete. Clearing powertrain DTCs will set the Inspection/ Maintenance (I/M) system status indicators to No.
5. Perform the scan tool configuration/reset function: Transmission Service Fast Learn— If available
6. All OK.

Unsuccessful Programming Recovery

If programming a control module is not successful, perform the following procedure:

1. Verify the control module, data link connector and programming tool connections are secure and the tool software is up to date.
2. Ignition » On / Vehicle » In Service Mode
3. Perform one of the following SPS Programming functions:

Note: If both controller options below are listed, select K20/K71 Engine and Transmission Control Modules.

- K20/K71 Engine and Transmission Control Modules and follow the on-screen instructions.
- K71 Transmission Control Module and follow on-screen instructions.

4. Verify the control module programming is successful.

⇒ If the programming is not successful » Replace the component: K71 Transmission Control Module

⇓ If the programming is successful

4.1. Select» MCVM Operations— If applicable

4.2. Ignition/Vehicle » Off — For greater than 2 min

4.3. Select» Setup— Follow the on-screen instructions.

If setup is not an available option — Perform the appropriate learn/reset procedure with the scan tool

⇓ **If the programming is successful**

5. Select» MCVM Operations— If applicable
6. Ignition/Vehicle » Off — For greater than 2 min
7. Select» Setup— Follow the on-screen instructions.

If setup is not an available option — Perform the appropriate learn/reset procedure with the scan tool

8. Clear DTCs after programming is complete. Clearing powertrain DTCs will set the Inspection/ Maintenance (I/M) system status indicators to No.
9. Perform the scan tool configuration/reset function: Transmission Service Fast Learn— If available
10. All OK.

Repair Instructions

Perform the Diagnostic Repair Verification after completing the repair: *Diagnostic Repair Verification 2-375*

For control module replacement, programming, and setup refer to: *Control Module References 2-4*

K73 Telematic Control Module: Programming and Setup (UDA)

Note:

- DO NOT program a control module unless directed to by a service procedure or a service bulletin. If the control module is not properly configured with the correct calibration software, the control module will not control all of the vehicle features properly.
- Ensure the programming tool is equipped with the latest software and is securely connected to the data link connector. If there is an interruption during programming, programming failure or control module damage may occur.
- Stable battery voltage is critical during programming. Any fluctuation, spiking, over voltage or loss of voltage will interrupt programming. When required, install a battery maintainer or power supply that provides a steady and stable voltage. Do not use a battery charger, as charging voltage will often fluctuate when connected to the vehicle. This may interrupt programing. If a battery maintainer is not available, connect a fully charged 12 V jumper or booster pack disconnected from the AC voltage supply.
- Turn OFF or disable systems that may put a load on the vehicles battery such as; interior lights, exterior lights (including daytime running lights), HVAC, radio, etc.
- Programming must begin with the Ignition/Vehicle OFF. Programming will direct the appropriate control module(s) to change power mode as needed during the procedure, independent of the vehicle's power mode.
- Clear DTCs after programming is complete. Clearing powertrain DTCs will set the Inspection/ Maintenance (I/M) system status indicators to NO.

Reference Information

Special Tools

- EL-52100 Multiple Diagnostic Interface 2 (MDI 2)

For equivalent regional tools, refer to *Special Tools 2-72*.

Replace and Program Control Module or Reprogram Control Module

To program a replacement or an existing control module, perform the following procedure:

Note: Begin with the vehicle in the vehicle OFF power mode. The Service Programming System will power mode the vehicle.

1. Ignition/Vehicle OFF
2. Access the Service Programming System (SPS) and follow the on-screen instructions.
3. In the SPS Supported Controllers screen, select K73 Telematic Control Module and Service Activation and follow the on-screen instructions.
4. Clear DTCs.

Unsuccessful Programming Recovery

In the event of an interrupted or unsuccessful programming event, perform the following steps:

Note: Begin with the vehicle in the vehicle OFF power mode. The Service Programming System will power mode the vehicle.

1. Ignition/Vehicle OFF
2. Ensure the control module, DLC and programming tool connections are secure and the SPS software is up to date.
3. Verify the control module can be reprogrammed.

⇒ **If the control module cannot be reprogrammed**

3.1. Ignition OFF for one minute.

3.2. Verify the control module can be reprogrammed.

⇒ If the control module cannot be reprogrammed, replace the control module.

⇓ If the control module can be reprogrammed.

3.3. All OK.

⇓ **If the control module can be reprogrammed**

4. All OK.

K73 Telematic Control Module: Programming and Setup (UE1)

Note:

- DO NOT program a control module unless directed to by a service procedure or a service bulletin. If the control module is not properly configured with

the correct calibration software, the control module will not control all of the vehicle features properly.

- Ensure the programming tool is equipped with the latest software and is securely connected to the data link connector. If there is an interruption during programming, programming failure or control module damage may occur.
- Stable battery voltage is critical during programming. Any fluctuation, spiking, over voltage or loss of voltage will interrupt programming. When required, install a battery maintainer or power supply that provides a steady and stable voltage. Do not use a battery charger, as charging voltage will often fluctuate when connected to the vehicle. This may interrupt programing. If a battery maintainer is not available, connect a fully charged 12 V jumper or booster pack disconnected from the AC voltage supply.
- Turn OFF or disable systems that may put a load on the vehicles battery such as; interior lights, exterior lights (including daytime running lights), HVAC, radio, etc.
- Programming must begin with the Ignition/Vehicle OFF. Programming will direct the appropriate control module(s) to change power mode as needed during the procedure, independent of the vehicle's power mode.
- Clear DTCs after programming is complete. Clearing powertrain DTCs will set the Inspection/ Maintenance (I/M) system status indicators to NO.

Diagnostic Aids

Note: Check for Preliminary Information or Technical Service Bulletins before programming.

- It is critical to use the service replacement K73 Telematic Control Module only in the vehicle for which it was ordered.
- Failure to perform the following procedures will result in a red LED, DTC(s) being set, and limited or incomplete OnStar® services.
- An OnStar® button press to the OnStar® call center is required to complete the module replacement procedure.
- To fully activate an OnStar® module, both the setup and activation request procedures must be completed on all vehicles with and without an active OnStar® subscription to insure the unit has been setup properly for the vehicle it has been installed into and also to update the OnStar® with the correct unit information.
- To initialize the Turn-by-Turn feature (if equipped), the vehicle must first be driven In open sky condition at speeds greater than 10 mph (16 kph) or more for a minimum of 5 miles (8 km) , and perform at least 2 left and 2 right 90 degree turns coming to complete stops prior to each turn.
- On vehicles up fitted with TTY capabilities, it is necessary to perform a power cycle of the OnStar® Interface Module (OTIM), and toggle the TTY mode after completing the Communication Interface Module installation and setup procedures.

Reference Information

Special Tools

- EL-52100 Multiple Diagnostic Interface 2 (MDI 2)

For equivalent regional tools, refer to *Special Tools 2-72*.

Replace and Program Control Module

To program a replacement control module, perform the following procedure:

Note: Begin with the vehicle in the vehicle OFF power mode. The Service Programming System will power mode the vehicle.

1. Ignition/Vehicle OFF.
2. Access the Service Programming System (SPS) and follow the on-screen instructions.
3. Check and follow Preliminary Information or Technical Service Bulletins before programming. If control module software updates are available, in the SPS Supported Controllers screen, select K73 – Software Update and follow the on-screen instructions.

Note: Refer to and follow the Preliminary Information or Service Bulletin to successfully program this control module.

4. To properly calibrate, activate and configure the control module, in the SPS Supported Controllers screen, select K73 Telematic Control Module – Programming and Service Activation and follow the on-screen instructions.
5. Clear DTCs.
6. Ignition/Vehicle ON.
7. Press the OnStar® Blue Button to call OnStar®, inform the advisor a new module has been installed and to verify the module is fully configured, registered, and activated.

Note: An OnStar® button press to the OnStar® call center is required to complete the module replacement procedure.

Programming Control Module for an Update

To program an existing control module for an update, perform the following procedure:

Note: Begin with the vehicle in the vehicle OFF power mode. The Service Programming System will power mode the vehicle.

1. Ignition/Vehicle OFF.
2. Access the Service Programming System (SPS) and follow the on-screen instructions.
3. Check and follow Preliminary Information or Technical Service Bulletins before programming. If control module software updates are available, in the SPS Supported Controllers screen, select K73 – Software Update and follow the on-screen instructions.

Note: For programming an existing module, you only need to perform “Software Update”.

4. Clear DTCs.

Unsuccessful Programming Recovery

In the event of an interrupted or unsuccessful programming event, perform the following steps:

Note: Begin with the vehicle in the vehicle OFF power mode. The Service Programming System will power mode the vehicle.

1. Ignition/Vehicle OFF
2. Ensure the control module, DLC and programming tool connections are secure and the SPS software is up to date.
3. Verify the control module can be reprogrammed.

⇒ **If the control module cannot be reprogrammed**

4. Ignition OFF for one minute.
   4.1. Verify the control module can be reprogrammed.

⇒ **If the control module cannot be reprogrammed**

⇒ Replace the control module.

⇓ **If the control module can be reprogrammed**

   4.2. Clear DTCs.
   4.3. All OK.

Repair Instructions

Perform the *Diagnostic Repair Verification 2-375* after completing the repair procedure.

Refer to *Control Module References 2-4* for control module replacement, programming and setup.

K85P Restraints Occupant Classification System Module - Passenger: Programming and Setup

Diagnostic Instructions

- Perform the *Diagnostic System Check - Vehicle 2-296* prior to using this diagnostic procedure.
- Review the description of *Strategy Based Diagnosis 2-286*

Note:

- Do NOT program a control module unless directed to by a service procedure or a service bulletin. If the control module is not properly configured with the correct calibration software, the control module will not control all of the vehicle features properly.
- Verify the programming tool is equipped with the latest software and is securely connected to the data link connector. If there is an interruption during programming, programming failure or control module damage may occur.
- Stable battery voltage is critical during programming. Any fluctuation, spiking, over voltage or loss of voltage will interrupt programming. When required, install a battery maintainer or power supply that provides a steady and stable voltage. Do not use a battery charger, as charging voltage will often fluctuate when connected to the vehicle. This may interrupt programming. If a battery maintainer is not available, connect a fully charged 12 V jumper or booster pack disconnected from the AC voltage supply.
- Turn OFF or disable systems that may put a load on the vehicle's battery such as interior lights, exterior lights (including daytime running lights), HVAC, radio, etc.
- Programming must begin with the Ignition/Vehicle OFF. Programming will direct the appropriate control module(s) to change power mode as needed during the procedure, independent of the vehicle’s power mode.
- To prevent programming failure due to unintended wireless drops, it is recommended that a wired MDI 2 connection be used when programming the control module.
- Clear DTCs after programming is complete. Clearing powertrain DTCs will set the Inspection/Maintenance (I/M) system status indicators to No.

Reference Information

Special Tools

EL-52100 Multiple Diagnostic Interface 2 (MDI 2)

Programming an Existing or New Control Module

To program an existing or new control module, perform the following procedure:

Note:

- Ensure the *EL-52100* (MDI 2) is used when programming the vehicle and verify it is working properly. Using the EL-47955 (MDI) will result in a programming failure.
- Verify all control modules are connected and communicating before attempting to program the K85P Restraints Occupant Classification System Module.
- Verify the key fob is inside the vehicle. If the key fob is not inside the vehicle, the serial data authentication configuration procedure which runs automatically at the end of the programming step will fail even though the programming appears to run successfully. If the serial data authentication configuration procedure fails, DTC U1962 will set and/or the setup step will fail or be incomplete.
- Before ROCSM Programing and Setup can be conducted, the front passenger seat must be completely empty of all items. The presence of any liquid or items on the front passenger seat will affect the calibration and operation of the ROCSM.
- DTC U3000.99 will set if the re-zero system test is performed with:
  - An aftermarket seat heater located too close to the sensor mat
  - A scan tool, laptop or other electronic device is in the seat.
  - The seat is damp or wet
  - An object or person is in the seat

1. Ignition/Vehicle OFF, ensure that the key fob is inside the vehicle and not moved for the duration of the programming to prevent an inadvertent power mode change during programming.
2. Verify that the temperature is between 32°F (0°C) to 100°F (38 °C).
3. Verify the seat is completely dry.
4. Empty the front outboard passenger seat.
5. Verify that all SIR and ROCSM components, connectors, and connector position assurances are properly connected and mounted.
6. Access the Service Programming System (SPS) and follow the on-screen instructions for the K85P Restraints Occupant Classification System Module.
7. Perform the SPS function: **Programming** and follow the on-screen instructions.
8. Perform the SPS function: **Setup** and follow the on-screen instructions.
9. Clear DTCs.

Unsuccessful Programming Recovery

Note:

- Ensure the *EL-52100* (MDI 2) is used when programming the vehicle. Using the EL-47955 (MDI) will result in a programming failure.
- It may be necessary to use another *EL-52100* (MDI 2) and/or cables to verify proper operation to eliminate the possibility of faulty equipment.
- If Ethernet programming fails, ensure there is no fault in the Ethernet circuits between the X84 Data Link Connector and K56 Serial Data Gateway Module. Refer to [Link target (target-id 300812-) not found] to diagnose these Ethernet circuits.

In the event of an interrupted or unsuccessful programming event, perform the following steps:

1. Exit Service Programming System (SPS) and disconnect all programming equipment from the vehicle.
2. Disconnect all battery voltage or ignition voltage sources from the control module.

Note: All voltage sources must be removed for a minimum of 10 min. This can be done several ways and should be completed by using the least intrusive way. This can vary depending on vehicle and control module location and can be done by one of the options listed below:

- Removing all fuses supplying battery voltage and ignition voltage to the control module.
- Disconnecting all harness connectors from the control module.
- Performing a 12 V battery disconnect by disconnecting the battery negative cable. Refer to [Link target (target-id 37733-) not found] .

3. Reconnect all battery voltage and ignition voltage sources to the control module.
4. Close down the current session of Techline Connect and reopen a new session.
5. Verify the control module, data link connector, and programming tool connections are secure and the tool software is up to date.
6. Ignition/Vehicle OFF, ensure that the key fob is inside the vehicle and not moved for the duration of the programming to prevent an inadvertent power mode change during programming.
7. Access the Service Programming System (SPS) and follow the on-screen instructions for the control module.
8. Verify the control module can be programmed.

⇒ **If the control module can not be programmed**

8.1. Ignition ON/Vehicle in Service Mode for 1 min.

8.2. Ignition/Vehicle OFF.

8.3. Access SPS and follow the on-screen instructions for the control module.

Note: If programming is still not successful after the second programming attempt, check the following:

- For facilities using an internet firewall, ensure firewall settings are not blocking file downloads and/or require elevated rights.
- For United States and Canada GM dealers, the appropriate firewall settings can be found in the GM DEALER INFRASTRUCTURE & SECURITY GUIDELINES (DISG) section 2.d.vii.

8.4. Verify the control module can be programmed.

⇒ If the control module can not be programmed, replace the control module.

⇓ If the control module can be programmed

8.5. Clear DTCs.

⇓ **If the control module can be programmed**

9. Clear DTCs.

Repair Instructions

For module replacement, refer to: [Link target (target-id 188211-) not found]

K99 Steering Column Control Module: Programming and Setup

When replacing the K99 Steering Column Control Module, steering column tilt motor, or steering column telescope motor, the steering column tilt wheel and telescope control module learn procedure must be followed. Refer to [Link target (target-id 225575-) not found] steering column tilt wheel and telescope control module learn procedure.

K124 Image Processing Module: Programming and Setup (without UKL)

Note:

- DO NOT program a control module unless directed to by a service procedure or a service bulletin. If the image processing module is not properly configured with the correct calibration software, the image processing module will not control all of the vehicle features properly.
- Ensure the programming tool is equipped with the latest software and is securely connected to the data link connector. If there is an interruption during programming or programming failure, image processing module damage may occur.
- Stable battery voltage is critical during programming. Any fluctuation, spiking, over voltage or loss of voltage will interrupt programming. Install the *EL-49642* SPS Programming Support Tool to maintain system voltage. If not available, connect a fully charged 12 V jumper or booster pack disconnected from the AC voltage supply.
- Turn OFF or disable systems that may put a load on the vehicles battery such as; interior lights, exterior lights (including daytime running lights), HVAC, radio, etc.
- During the programming procedure, follow the SPS prompts for the correct ignition switch position.
- Clear DTCs after programming is complete. Clearing powertrain DTCs will set the Inspection/ Maintenance (I/M) system status indicators to NO.

Replace and Program K124 Image Processing Module or Reprogram K124 Image Processing Module

Note: Due to continuous improvements, the on screen selections may vary from instructions below.

To program a replacement or an existing K124 Image Processing Module, perform the following procedure:

1. Ignition/Vehicle OFF
2. Access the Service Programming System (SPS) and follow the on-screen instructions.
3. On the SPS Supported Controllers screen, select K124 Image Processing Module – Programming and follow the on-screen instructions.
4. Clear DTCs.

Unsuccessful Programming Recovery

In the event of an interrupted or unsuccessful programming event, perform the following steps:

1. Ignition ON. Ensure the image processing module, DLC and programming tool connections are secure and the SPS software is up to date.
2. Verify the K124 Image Processing Module can be reprogrammed.

⇒ **If the K124 Image Processing Module cannot be reprogrammed**

2.1. Ignition OFF for one minute, ignition ON.

2.2. Verify the K124 Image Processing Module can be reprogrammed.

⇒ If the image processing module cannot be reprogrammed, replace the K124 Image Processing Module.

⇓ If the K124 Image Processing Module can be reprogrammed.

2.3. All OK.

⇓ **If the K124 Image Processing Module can be reprogrammed**

3. All OK.

K124 Image Processing Module: Programming and Setup

Note:

- DO NOT program a control module unless directed to by a service procedure or a service bulletin. If the image processing module is not properly configured with the correct calibration software, the image processing module will not control all of the vehicle features properly.
- Ensure the programming tool is equipped with the latest software and is securely connected to the data link connector. If there is an interruption during programming or programming failure, image processing module damage may occur.
- Stable battery voltage is critical during programming. Any fluctuation, spiking, over voltage or loss of voltage will interrupt programming. Install the *EL-49642* SPS Programming Support Tool to maintain system voltage. If not available, connect a fully charged 12 V jumper or booster pack disconnected from the AC voltage supply.
- Turn OFF or disable systems that may put a load on the vehicles battery such as; interior lights, exterior lights (including daytime running lights), HVAC, radio, etc.
- During the programming procedure, follow the SPS prompts for the correct ignition switch position.
- Clear DTCs after programming is complete. Clearing powertrain DTCs will set the Inspection/ Maintenance (I/M) system status indicators to NO.

Diagnostic Aids

There one K124 Image Processing Module with two internal processors with UKL. Both processors must be at the same level of software. To ensure this, programming processors individually is prohibited. For more information refer to: *Super Cruise Description and Operation 7-36*

Reprogram Image Processing Module

Note: Due to continuous improvements, the on screen selections may vary from instructions below.

To reprogram an existing K124 Image Processing Module, perform the following procedure:

1. Ignition/Vehicle OFF
2. Access the Service Programming System (SPS) and follow the on-screen instructions.
3. On the SPS Supported Controllers screen, select K124 Image Processing Module – Programming and follow the on-screen instructions.
4. Clear DTCs.

Replace and Program Image Processing Module

Note: Due to continuous improvements, the on screen selections may vary from instructions below.

To program a replacement K12 Image Processing Module, perform the following procedure:

1. Ignition/Vehicle OFF
2. Access the Service Programming System (SPS) and follow the on-screen instructions.
3. On the SPS Supported Controllers screen, select K124 Image Processing Module – Programming and follow the on-screen instructions.
4. Perform the Vehicle Dynamic Sensor Offset Calibration. Refer to: [Link target (target-id 330157-) not found]
5. Clear DTCs.

Unsuccessful Programming Recovery

In the event of an interrupted or unsuccessful programming event, perform the following steps:

1. Ignition ON. Ensure the Image Processing Module, DLC and programming tool connections are secure and the SPS software is up to date.
2. Verify the K124 Image Processing Module can be reprogrammed.

⇒ **If the K124 Image Processing Module cannot be reprogrammed**

2.1. Ignition OFF for one minute, ignition ON.

2.2. Verify the appropriate K124 Image Processing Module can be reprogrammed.

⇒ If the image processing module cannot be reprogrammed, replace the appropriate K124 Image Processing Module.

⇓ If the K124 Image Processing Module can be reprogrammed.

2.3. All OK.

⇓ **If the K124 Image Processing Module can be reprogrammed**

3. All OK.

Repair Instructions

Perform the *Diagnostic Repair Verification 2-375* after completing the repair.

Control Module References 2-4 for Control Module replacement, programming and setup

K160 Brake System Control Module: Programming and Setup

Note:

- DO NOT program a control module unless directed to by a service procedure or a service bulletin. If the control module is not properly configured with the correct calibration software, the control module will not control all of the vehicle features properly.
- Ensure the programming tool is equipped with the latest software and is securely connected to the data link connector. If there is an interruption during programming, programming failure or control module damage may occur.
- Stable battery voltage is critical during programming. Any fluctuation, spiking, over voltage or loss of voltage will interrupt programming. When required, install a battery maintainer or power supply that provides a steady and stable voltage. Do not use a battery charger, as charging voltage will often fluctuate when connected to the vehicle. This may interrupt programing. If a battery maintainer is not available, connect a fully charged 12 V jumper or booster pack disconnected from the AC voltage supply.
- Turn OFF or disable systems that may put a load on the vehicles battery such as; interior lights, exterior lights (including daytime running lights), HVAC, radio, etc.
- During the programming procedure, follow the SPS prompts for the correct ignition switch position.
- Clear DTCs after programming is complete. Clearing powertrain DTCs will set the Inspection/ Maintenance (I/M) system status indicators to NO.

Replace and Program Control Module

To program a replacement or an existing control module, perform the following procedure:

1. Access the Service Programming System (SPS) and follow the on-screen instructions.
2. If equipped with Brake Pad Life Monitor (JBP), on the SPS Supported Controllers screen, select K160 Brake System Control Module - Prepare Module for Removal and follow the on-screen instructions.
3. On the SPS Supported Controllers screen, select K160 Brake System Control Module - Programming and follow the on-screen instructions.
4. On the SPS Supported Controllers screen, select K160 Brake System Control Module - Setup and follow the on-screen instructions.
5. If the A104 Brake Master Cylinder was also replaced proceed to step 7.
6. If only the K160 Brake System Control Module was replaced proceed to step 10.
7. Perform the scan tool Control Functions, Brake Pressure Sensor Calibration.
8. Perform the scan tool Control Functions, Brake System Plunger Pressure Rise Starting Point Learn.
9. Perform the scan tool Control Functions, Brake System Plunger Motor Position Sensor Learn.
10. Perform the scan tool Control Functions, Brake Hydraulics Test procedure.
11. If the Brake Hydraulics Test fails perform the scan tool Control Functions, Automated Brake Bleed procedure
12. If the programming procedure did not complete and a Device Control Limits Exceeded message is displayed refer to [Link target (target-id 316903-) not found]
13. Clear DTCs.
14. If ABS, Traction Control and/or Stabilitrak indicators or Brake Related Messages are ON after performing programming and setup, do the following:
    - 14.1. Disconnect the scan tool from the X84 Data Link Connector.
    - 14.2. Ignition/Vehicle OFF, all access doors closed, all vehicle systems OFF, and all keys at least 3 m (9.8 ft) away from the vehicle. It may take up to 10 min to power down.
    - 14.3. Ignition ON/Vehicle In Service Mode, verify ABS, Traction Control and/or Stabilitrak indicators or Brake Messsages are Off. If not, repeat the above step to make sure the vehicle is in sleep mode.
    - 14.4. Clear DTCs.

Reprogram Control Module

To reprogram an existing control module, perform the following procedure:

1. Access the Service Programming System (SPS) and follow the on-screen instructions.
2. On the SPS Supported Controllers screen, select K160 Brake System Control Module - Programming and follow the on-screen instructions.
3. If the programming procedure did not complete and a Device Control Limits Exceeded message is displayed refer to [Link target (target-id 316903-) not found]
4. Clear DTCs.
5. If ABS, Traction Control and/or Stabilitrak indicators or Brake Related Messages are ON after performing programming, do the following:
    - 5.1. Disconnect the scan tool from the X84 Data Link Connector.

5.2. Ignition/Vehicle OFF, all access doors closed, all vehicle systems OFF, and all keys at least 3 m (9.8 ft) away from the vehicle. It may take up to 10 min to power down.

5.3. Ignition ON/Vehicle In Service Mode, verify ABS, Traction Control and/or Stabilitrak indicators or Brake Messsages are Off. If not, repeat the above step to make sure the vehicle is in sleep mode.

5.4. Clear DTCs.

Unsuccessful Programming Recovery

Note:

- Ensure the *EL-52100* (MDI 2) is used when programming the vehicle. Using the EL-47955 (MDI) will result in a programming failure.
- It may be necessary to use another *EL-52100* (MDI 2) and/or cables to verify proper operation to eliminate the possibility of faulty equipment.
- If Ethernet programming fails, ensure there is no fault in the Ethernet circuits between the X84 Data Link Connector and K56 Serial Data Gateway Module. Refer to [Link target (target-id 300812-) not found] to diagnose these Ethernet circuits.

In the event of an interrupted or unsuccessful programming event, perform the following steps:

1. Exit Service Programming System (SPS) and disconnect all programming equipment from the vehicle.
2. Disconnect all battery voltage or ignition voltage sources from the control module.

Note: All voltage sources must be removed for a minimum of 10 min. This can be done several ways and should be completed by using the least intrusive way. This can vary depending on vehicle and control module location and can be done by one of the options listed below:

- Removing all fuses supplying battery voltage and ignition voltage to the control module.
- Disconnecting all harness connectors from the control module.
- Performing a 12 V battery disconnect by disconnecting the battery negative cable. Refer to [Link target (target-id 37733-) not found] .

3. Reconnect all battery voltage and ignition voltage sources to the control module.
4. Close down the current session of Techline Connect and reopen a new session.
5. Verify the control module, data link connector, and programming tool connections are secure and the tool software is up to date.
6. Ignition/Vehicle OFF, ensure that the key fob is inside the vehicle and not moved for the duration of the programming to prevent an inadvertent power mode change during programming.
7. Access the Service Programming System (SPS) and follow the on-screen instructions for the control module.
8. Verify the control module can be programmed.

⇒ **If the control module can not be programmed**

8.1. Ignition ON/Vehicle in Service Mode for 1 min.

8.2. Ignition/Vehicle OFF.

8.3. Access SPS and follow the on-screen instructions for the control module.

Note: If programming is still not successful after the second programming attempt, check the following:

- For facilities using an internet firewall, ensure firewall settings are not blocking file downloads and/or require elevated rights.
- For United States and Canada GM dealers, the appropriate firewall settings can be found in the GM DEALER INFRASTRUCTURE & SECURITY GUIDELINES (DISG) section 2.d.vii.

8.4. Verify the control module can be programmed.

⇒ If the control module can not be programmed, replace the control module.

⇓ If the control module can be programmed

8.5. Clear DTCs.

⇓ **If the control module can be programmed**

9. Clear DTCs.

Repair Instructions

Perform the *Diagnostic Repair Verification 2-375* after completing the repair.

Control Module References 2-4 for Control Module replacement, programming and setup

K164 Differential Control Module: Programming and Setup

Note:

- DO NOT program a control module unless directed to by a service procedure or a service bulletin. If the ECU is not properly configured with the correct calibration software, the ECU will not control all of the vehicle features properly.
- Ensure the programming tool is equipped with the latest software and is securely connected to the data link connector. If there is an interruption during programming, programming failure or ECU damage may occur.

- Stable battery voltage is critical during programming. Any fluctuation, spiking, over voltage or loss of voltage will interrupt programming. When required, install a battery maintainer or power supply that provides a steady and stable voltage. Do not use a battery charger, as charging voltage will often fluctuate when connected to the vehicle. This may interrupt programing. If a battery maintainer is not available, connect a fully charged 12 V jumper or booster pack disconnected from the AC voltage supply.
- Turn OFF or disable systems that may put a load on the vehicles battery such as; interior lights, exterior lights (including daytime running lights), HVAC, radio, etc.
- During the programming procedure, follow the SPS prompts for the correct ignition switch position.
- Clear DTCs after programming is complete. Clearing powertrain DTCs will set the Inspection/ Maintenance (I/M) system status indicators to NO.

Diagnostic Aids

- If replacing only the Differential Control Module, run Prepare the Control Module for Removal.
- If original Differential Control Module is not communicating, skip the Prepare the Control Module for Removal step.

Replace and Program Control Module

To program a replacement control module, perform the following procedure:

1. Install the new rear differential assembly with new K164 Differential Control Module.
2. Access the Service Programming System (SPS) and follow the on-screen instructions.
3. Replace the new K164 Rear Differential Clutch Control Module with the original K164 Differential Control Module.
4. On the SPS Supported Controllers screen, select K164 Differential Control Module - Programming and follow the on-screen instructions.
5. On the SPS Supported Controllers screen, select K164 Differential Control Module - Setup and follow the on-screen instructions.
6. Clear DTCs.

Reprogram Control Module

To reprogram an existing control module, perform the following procedure:

1. Access the Service Programming System (SPS) and follow the on-screen instructions.
2. On the SPS Supported Controllers screen, select K164 Differential Control Module - Programming and follow the on-screen instructions.
3. On the SPS Supported Controllers screen, select K164 Differential Control Module - Setup and follow the on-screen instructions.
4. Clear DTCs.

Unsuccessful Programming Recovery

In the event of an interrupted or unsuccessful programming event, perform the following steps:

1. Ignition ON. Ensure the control module, DLC and programming tool connections are secure and the SPS software is up to date.
2. Verify the K164 Rear Differential Clutch Control Module can be reprogrammed.

⇒ **If the K164 Differential Control Module cannot be reprogrammed**

2.1. Ignition OFF for one minute, ignition ON.

2.2. Verify the K164 Differential Control Module can be reprogrammed.

⇒ If the control module cannot be reprogrammed, replace the K164 Differential Control Module.

⇓ If the control module can be reprogrammed.

2.3. All OK.

⇓ **If the K164 Differential Control Module can be reprogrammed**

3. All OK.

Repair Instructions

Perform the *Diagnostic Repair Verification 2-375* after completing the repair.

Control Module References 2-4 for control module replacement, programming and setup

K175 Center Console Compartment Cooler Control Module: Programming and Setup

There is no setup procedure that needs to be performed for the center console compartment cooler control module on this vehicle.

Repair Instructions

Perform the *Diagnostic Repair Verification 2-375* after completing the repair.

Control Module References 2-4 for the center console compartment cooler control module replacement, programming and setup

K180 Driver Monitoring System Control Module: Programming and Setup

Note:

- DO NOT program a control module unless directed to by a service procedure or a service bulletin. If the control module is not properly configured with the correct calibration software, the control module will not control all of the vehicle features properly.
- Ensure the programming tool is equipped with the latest software and is securely connected to the data link connector. If there is an interruption during programming, programming failure or control module damage may occur.
- Turn OFF or disable systems that may put a load on the vehicles battery such as; interior lights, exterior lights (including daytime running lights), HVAC, radio, etc.
- During the programming procedure, follow the SPS prompts for the correct ignition switch position.
- Clear DTCs after programming is complete. Clearing powertrain DTCs will set the Inspection/ Maintenance (I/M) system status indicators to NO.

Reference Information

Special Tools
EL-49642 SPS Programming Support Tool

For equivalent regional tools, refer to *Special Tools 2-72*.

Replace and Program Control Module or Reprogram Control Module

To program a replacement or an existing control module, perform the following procedure:

1. Ignition/Vehicle OFF
2. Access the Service Programming System (SPS) and follow the on-screen instructions.
3. On the SPS Supported Controllers screen, select K180 Driver Monitoring System Control Module - Programming and follow the on-screen instructions.
4. On the SPS Supported Controllers screen, select K180 Driver Monitoring System Control Module - Setup (If Applicable) and follow the on-screen instructions.
5. On the SPS Supported Controllers screen, select K180 Driver Monitoring System Control Module - Configuration (If Applicable) and follow the on-screen instructions.

Unsuccessful Programming Recovery

In the event of an interrupted or unsuccessful programming event, perform the following steps:

1. Ignition ON. Ensure the control module, DLC and programming tool connections are secure and the SPS software is up to date.
2. Verify the control module can be reprogrammed.

⇒ **If the control module cannot be reprogrammed**

2.1. Ignition OFF for one minute, ignition ON.

2.2. Verify the control module can be reprogrammed.

⇒ If the control module cannot be reprogrammed, replace the control module.

⇓ If the control module can be reprogrammed.

2.3. All OK.

⇓ **If the control module can be reprogrammed**

3. All OK.

Repair Instructions

Perform the *Diagnostic Repair Verification 2-375* after completing the repair.

Control Module References 2-4 for Control Module replacement, programming and setup

K182 Parking Assist Control Module: Programming and Setup (UD5 without 00Z)

Note:

- DO NOT program a control module unless directed to by a service procedure or a service bulletin. If the control module is not properly configured with

the correct calibration software, the control module will not control all of the vehicle features properly.

- Ensure the programming tool is equipped with the latest software and is securely connected to the data link connector. If there is an interruption during programming, programming failure or control module damage may occur.
- Stable battery voltage is critical during programming. Any fluctuation, spiking, over voltage or loss of voltage will interrupt programming. When required install the *EL-49642* SPS Programming Support Tool to maintain system voltage. If not available, connect a fully charged 12 V jumper or booster pack disconnected from the AC voltage supply. DO NOT connect a battery charger.
- Turn OFF or disable systems that may put a load on the vehicles battery such as; interior lights, exterior lights (including daytime running lights), HVAC, radio, etc.
- During the programming procedure, follow the SPS prompts for the correct ignition switch position.
- Clear DTCs after programming is complete. Clearing powertrain DTCs will set the Inspection/ Maintenance (I/M) system status indicators to NO.

Replace and Program Control Module

To program a replacement control module, perform the following procedure:

1. Ignition/Vehicle OFF
2. Access the Service Programming System (SPS) and follow the on-screen instructions.
3. On the SPS Supported Controllers screen, under Select Controller, select K182 Parking Assist Control Module.
4. On the SPS Supported Controllers screen, under Select Function / Sequence, select Programming and follow on screen instructions.
5. Clear DTCs.

Reprogram Control Module

Do not reprogram the parking assist control module, unless directed by a service procedure, or a service bulletin.

To reprogram an existing control module, perform the following procedure:

1. Access the Service Programming System (SPS) and follow the on-screen instructions.
2. On the SPS Supported Controllers screen, under Select Controller, select K182 Parking Assist Control Module.
3. On the SPS Supported Controllers screen, under Select Function / Sequence, select Programming and follow on screen instructions.
4. Clear DTCs.

Unsuccessful Programming Recovery

In the event of an interrupted or unsuccessful programming event, perform the following steps:

1. Ignition ON. Ensure the K182 Parking Assist Control Module, DLC and programming tool connections are secure and the SPS software is up to date.
2. Verify the parking assist control module can be reprogrammed.

⇒ **If the K182 Parking Assist Control Module cannot be reprogrammed**

2.1. Ignition OFF for one minute, ignition ON.

2.2. Verify the parking assist control module can be reprogrammed.

⇒ If the K182 Parking Assist Control Module cannot be reprogrammed, replace the parking assist control module.

⇓ If the K182 Parking Assist Control Module can be reprogrammed.

2.3. All OK.

⇓ **If the K182 Parking Assist Control Module can be reprogrammed**

3. All OK.

Repair Instructions

Perform the *Diagnostic Repair Verification 2-375* after completing the repair.

Control Module References 2-4 for control module replacement, programming and setup

K182 Parking Assist Control Module: Programming and Setup (UD5 with 00Z)

Note: When performing #N222375790-09: Customer Satisfaction Program - Park Assist Retrofit - (Nov 1, 2023) refer to K182 Parking Assist Control Module: Programming and Setup (UD7 without 00Y) in SI.

This device does not require programming or setup.

K183 UHF Short Range Low Energy Remote Control Access Transceiver: Programming and Setup

Note:

- DO NOT program a control module unless directed to by a service procedure or a service bulletin. If the control module is not properly configured with the correct calibration software, the control module will not control all of the vehicle features properly.
- Ensure the programming tool is equipped with the latest software and is securely connected to the data link connector. If there is an interruption during programming, programming failure or control module damage may occur.
- Stable battery voltage is critical during programming. Any fluctuation, spiking, over voltage or loss of voltage will interrupt programming. When required install the *EL-49642* SPS Programming Support Tool to maintain system voltage. If not available, connect a fully charged 12 V jumper or booster pack disconnected from the AC voltage supply. DO NOT connect a battery charger.
- Turn OFF or disable systems that may put a load on the vehicles battery such as; interior lights, exterior lights (including daytime running lights), HVAC, radio, etc.
- During the programming procedure, follow the SPS prompts for the correct ignition switch position.
- Clear DTCs after programming is complete. Clearing powertrain DTCs will set the Inspection/ Maintenance (I/M) system status indicators to NO.

Replace and Program Control Module

To program a replacement control module, perform the following procedure:

1. Access the Service Programming System (SPS) and follow the on-screen instructions.
2. On the SPS Supported Controllers screen, under Select Controller, select K183 UHF Short Range Low Energy Remote Control Access Transceiver.
3. On the SPS Supported Controllers screen, under Select Function / Sequence, select Programming and follow on screen instructions.
4. On the SPS Supported Controllers screen, under Select Function / Sequence, select Configuration and follow the on-screen instructions.
5. Clear DTCs.

Reprogram Control Module

Do not reprogram the module, unless directed by a service procedure, or a service bulletin.

To reprogram an existing control module, perform the following procedure:

1. Access the Service Programming System (SPS) and follow the on-screen instructions.
2. On the SPS Supported Controllers screen, under Select Controller, select K183 UHF Short Range Low Energy Remote Control Access Transceiver.
3. On the SPS Supported Controllers screen, under Select Function / Sequence, select Programming and follow on screen instructions.
4. Clear DTCs.

Unsuccessful Programming Recovery

In the event of an interrupted or unsuccessful programming event, perform the following steps:

1. Ignition ON. Ensure the K183 UHF Short Range Low Energy Remote Control Access Transceiver, DLC and programming tool connections are secure and the SPS software is up to date.
2. Verify the module can be reprogrammed.

⇒ **If the K183 UHF Short Range Low Energy Remote Control Access Transceiver cannot be reprogrammed**

2.1. Ignition OFF for one minute, ignition ON.

2.2. Verify the K183 UHF Short Range Low Energy Remote Control Access Transceiver can be reprogrammed.

⇒ If the K183 UHF Short Range Low Energy Remote Control Access Transceiver cannot be reprogrammed, replace the module.

⇓ If the K183 UHF Short Range Low Energy Remote Control Access Transceiver can be reprogrammed.

2.3. All OK.

⇓ **If the K183 UHF Short Range Low Energy Remote Control Access Transceiver can be reprogrammed**

3. All OK.

Repair Instructions

Perform the *Diagnostic Repair Verification 2-375* after completing the repair.

Control Module References 2-4 for control module replacement, programming and setup

K194 Rear Gate Module: Programming and Setup

Note:

- DO NOT program a control module unless directed to by a service procedure or a service bulletin. If the control module is not properly configured with the correct calibration software, the control module will not control all of the vehicle features properly.
- Verify the programming tool is equipped with the latest software and is securely connected to the data link connector. If there is an interruption during programming, programming failure or control module damage may occur.
- Stable battery voltage is critical during programming. Any fluctuation, spiking, over voltage or loss of voltage will interrupt programming. When required, install a battery maintainer or power supply that provides a steady and stable voltage. DO NOT use a battery charger, as charging voltage will often fluctuate when connected to the vehicle. This may interrupt programing. If a battery maintainer is not available, connect a fully charged 12 V jumper or booster pack disconnected from the AC voltage supply.
- Turn OFF or disable systems that may put a load on the vehicles battery such as; interior lights, exterior lights (including daytime running lights), HVAC, radio, etc.
- Programming must begin with the Ignition/Vehicle OFF. Programming will direct the appropriate control module(s) to change power mode as needed during the procedure, independent of the vehicle's power mode.
- Clear DTCs after programming is complete. Clearing powertrain DTCs will set the Inspection/ Maintenance (I/M) system status indicators to NO.
- To prevent programming failure due to unintended wireless drops, it is recommended that a wired MDI connection be used when programming the control module.

Replace and Program Control Module

Note:

- Some vehicles may be equipped with the handsfree liftgate control option (TC2), or handsfree liftgate control option (TCP) it is important to select the correct calibration software for vehicles with or without this option as programming the liftgate with the incorrect software will cause the power liftgate system to become inoperative without any DTCs indicated
- The liftgate must be completely closed and latched, if the liftgate is open or ajar during programming, the power liftgate system may become inoperative without any DTCs indicated
- Verify all modules are connected and communicating before attempting to program the K194 Rear Gate Module.

To program a replacement control module, perform the following procedure:

1. Access the Service Programming System (SPS) and follow the on-screen instructions.
2. On the SPS Supported Controllers screen, select K194 Rear Gate Module - Programming and follow the on-screen instructions.
3. On the SPS Supported Controllers screen, select K194 Rear Gate Module - Setup and follow the on-screen instructions.
4. Clear DTCs

Reprogram Control Module

Note:

- Some vehicles may be equipped with the handsfree liftgate control option (TC2), or handsfree liftgate control option (TCP) it is important to select the correct calibration software for vehicles with or without this option as programming the liftgate with the incorrect software will cause the power liftgate system to become inoperative without any DTCs indicated
- The liftgate must be completely closed and latched, if the liftgate is open or ajar during programming, the power liftgate system may become inoperative without any DTCs indicated
- Verify all modules are connected and communicating before attempting to program the K194 Rear Gate Module.

To reprogram an existing control module, perform the following procedure:

1. Access the Service Programming System (SPS) and follow the on-screen instructions.
2. On the SPS Supported Controllers screen, select K194 Rear Gate Module - Programming and follow the on-screen instructions.

3. On the SPS Supported Controllers screen, select K194 Rear Gate Module - Setup and follow the on-screen instructions.
4. Clear DTCs

Unsuccessful Programming Recovery

In the event of an interrupted of unsuccessful programming event, perform the following steps:

1. Vehicle Power Mode » Run/Service Mode.
2. Ensure the control module, DLC and programming tool connections are secure and the SPS software is up to date.
3. Verify the control module can be reprogrammed.

⇒ **If the control module cannot be reprogrammed**

3.1. Vehicle Power Mode » OFF for one minute, Vehicle Power Mode » Run/Service Mode.

3.2. Verify the control module can be reprogrammed.

⇒ If the control module cannot be reprogrammed, replace the control module.

⇓ If the control module can be reprogrammed.

3.3. All OK.

⇓ **If the control module can be reprogrammed**

4. All OK.

Repair Instructions

Perform the *Diagnostic Repair Verification 2-375* after completing the repair.

Control Module References 2-4 for rear gate module replacement, programming and setup

K299R Audio/Video Interface Rear Module: Programming and Setup

Note:

- DO NOT program a control module unless directed to by a service procedure or a service bulletin. If the control module is not properly configured with the correct calibration software, the control module will not control all of the vehicle features properly.
- Ensure the programming tool is equipped with the latest software and is securely connected to the data link connector. If there is an interruption during programming, programming failure or control module damage may occur.
- Stable battery voltage is critical during programming. Any fluctuation, spiking, over voltage or loss of voltage will interrupt programming. When required, install a battery maintainer or power supply that provides a steady and stable voltage. Do not use a battery charger, as charging voltage will often fluctuate when connected to the vehicle. This may interrupt programing. If a battery maintainer is not available, connect a fully charged 12 V jumper or booster pack disconnected from the AC voltage supply.
- Turn OFF or disable systems that may put a load on the vehicles battery such as; interior lights, exterior lights (including daytime running lights), HVAC, radio, etc.
- Programming must begin with the Ignition/Vehicle OFF. Programming will direct the appropriate control module(s) to change power mode as needed during the procedure, independent of the vehicle's power mode.
- Clear DTCs after programming is complete. Clearing powertrain DTCs will set the Inspection/ Maintenance (I/M) system status indicators to NO.

Reference Information

Special Tools

- EL-52100 Multiple Diagnostic Interface 2 (MDI 2)

For equivalent regional tools, refer to *Special Tools 2-72*.

Replace and Program or Reprogram Control Module

The replacement control module is fully programmed by the supplier and does not require SPS programming or any setup procedures.

Reprogram Control Module

To program an existing control module, perform the following procedure:

Note: In SPS when selecting K299 – Audio/Video Interface Module, the system will automatically program both the K299 – Audio/Video Interface Module and the K299R – Audio/Video Interface Rear Module sequentially if both module's need updating. If one module's calibrations are current and one modules calibrations needs an update, it will only program the one that needs updating. If both module's calibrations are current neither will be programmed.

1. Ignition/Vehicle OFF
2. Access the Service Programming System (SPS) and follow the on-screen instructions.
3. On the SPS Supported Controllers screen, select K299 – Audio/Video Interface Module Programming and follow the on-screen instructions.
4. At the end of programming, clear DTCs

Unsuccessful Programming Recovery

In the event of an interrupted or unsuccessful programming event, perform the following steps:

1. Ensure the control module, DLC and programming tool connections are secure and the SPS software is up to date.
2. Verify the control module can be reprogrammed.

Note: If Ethernet programming fails, ensure the module is communicating over ethernet properly. Refer to [Link target (target-id 300812-) not found]

⇒ **If the control module cannot be reprogrammed**

2.1. Ignition OFF for one minute.

2.2. Verify the control module can be reprogrammed.

⇒ If the control module cannot be reprogrammed, replace the control module.

⇓ If the control module can be reprogrammed.

2.3. All OK.

⇓ **If the control module can be reprogrammed**

3. All OK.

Repair Instructions

Perform the *Diagnostic Repair Verification 2-375* after completing the repair.

Control Module References 2-4 for control module replacement, programming and setup

K313 Interior Object Detection Module: Programming and Setup

Note:

- Do NOT program a control module unless directed to by a service procedure or a service bulletin. If the control module is not properly configured with the correct calibration software, the control module will not control all of the vehicle features properly.
- Verify the programming tool is equipped with the latest software and is securely connected to the data link connector. If there is an interruption during programming, programming failure or control module damage may occur.
- Stable battery voltage is critical during programming. Any fluctuation, spiking, over voltage or loss of voltage will interrupt programming. When required, install a battery maintainer or power supply that provides a steady and stable voltage. Do not use a battery charger, as charging voltage will often fluctuate when connected to the vehicle. This may interrupt programming. If a battery maintainer is not available, connect a fully charged 12 V jumper or booster pack disconnected from the AC voltage supply.
- Turn OFF or disable systems that may put a load on the vehicle's battery such as interior lights, exterior lights (including daytime running lights), HVAC, radio, etc.
- Programming must begin with the Ignition/Vehicle OFF. Programming will direct the appropriate control module(s) to change power mode as needed during the procedure, independent of the vehicle’s power mode.
- To prevent programming failure due to unintended wireless drops, it is recommended that a wired MDI 2 connection be used when programming the control module.
- Clear DTCs after programming is complete. Clearing powertrain DTCs will set the Inspection/ Maintenance (I/M) system status indicators to No.

Reference Information

Special Tools

EL-52100 Multiple Diagnostic Interface 2 (MDI 2)

For equivalent regional tools, refer to *Special Tools 2-72*.

Programming a New Control Module

To program a replacement K313 Interior Object Detection Module, perform the following procedure:

Note:

- Ensure the *EL-52100* (MDI 2) is used when programming the vehicle and verify it is working properly. Using the EL-47955 (MDI) will result in a programming failure.
- Verify all control modules are connected and communicating before attempting to program the control module.
- Verify the key fob is inside the vehicle. If the key fob is not inside the vehicle, the serial data authentication configuration procedure which runs automatically at the end of the programming step will fail even though the programming appears to run successfully. If the serial data authentication configuration procedure fails, DTC U1962 will set and/or the setup step will fail or be incomplete.
- Begin with the vehicle in vehicle OFF power mode. The Service Programming System will power mode the vehicle.

1. Ignition/Vehicle OFF, ensure that the key fob is inside the vehicle and not moved for the duration of the programming to prevent an inadvertent power mode change during programming.
2. Access the Service Programming System (SPS) and follow the on-screen instructions.

3. On the SPS Supported Controllers screen, select K313 Interior Object Detection Module - Programming and follow the on-screen instructions.
4. On the SPS Supported Controllers screen, select K313 Interior Object Detection Module - Setup and follow the on-screen instructions.
5. Clear DTCs.

Programming an Existing Control Module

To program an existing K313 Interior Object Detection Module, perform the following procedure:

Note:

- Ensure the *EL-52100* (MDI 2) is used when programming the vehicle and verify it is working properly. Using the EL-47955 (MDI) will result in a programming failure.
- Verify all control modules are connected and communicating before attempting to program the control module.
- Verify the key fob is inside the vehicle. If the key fob is not inside the vehicle, the serial data authentication configuration procedure which runs automatically at the end of the programming step will fail even though the programming appears to run successfully. If the serial data authentication configuration procedure fails, DTC U1962 will set and/or the setup step will fail or be incomplete.
- Begin with the vehicle in vehicle OFF power mode. The Service Programming System will power mode the vehicle.

1. Ignition/Vehicle OFF, ensure that the key fob is inside the vehicle and not moved for the duration of the programming to prevent an inadvertent power mode change during programming.
2. Access the Service Programming System (SPS) and follow the on-screen instructions.
3. On the SPS Supported Controllers screen, select K313 Interior Object Detection Module - Programming and follow the on-screen instructions.
4. On the SPS Supported Controllers screen, select K313 Interior Object Detection Module - Setup and follow the on-screen instructions.
5. Clear DTCs.

Unsuccessful Programming Recovery

Note:

- Ensure the *EL-52100* (MDI 2) is used when programming the vehicle. Using the EL-47955 (MDI) will result in a programming failure.
- It may be necessary to use another *EL-52100* (MDI 2) and/or cables to verify proper operation to eliminate the possibility of faulty equipment.
- If Ethernet programming fails, ensure there is no fault in the Ethernet circuits between the X84 Data Link Connector and K56 Serial Data Gateway Module. Refer to [Link target (target-id 300812-) not found] to diagnose these Ethernet circuits.

In the event of an interrupted or unsuccessful programming event, perform the following steps:

1. Exit Service Programming System (SPS) and disconnect all programming equipment from the vehicle.
2. Disconnect all battery voltage or ignition voltage sources from the K313 Interior Object Detection Module. All voltage sources must be removed for a minimum of 10 min. This can be done several ways and should be completed by using the least intrusive way. This can vary depending on vehicle and control module location and can be done by one of the options listed below:
   - Removing all fuses supplying battery voltage and ignition voltage to the control module.
   - Disconnecting all harness connectors from the control module.
   - Performing a 12 V battery disconnect by disconnecting the battery negative cable. Refer to [Link target (target-id 37733-) not found] .
3. Reconnect all battery voltage and ignition voltage sources to the K313 Interior Object Detection Module.
4. Close down the current session of Techline Connect and reopen a new session.
5. Verify the K313 Interior Object Detection Module, X84 Data Link Connector, and programming tool connections are secure and the tool software is up to date.
6. Ignition/Vehicle OFF, ensure that the key fob is inside the vehicle and not moved for the duration of the programming to prevent an inadvertent power mode change during programming.
7. Access the Service Programming System (SPS) and follow the on-screen instructions for the K313 Interior Object Detection Module.
8. Verify the K313 Interior Object Detection Module can be programmed.

⇒ **If the K313 Interior Object Detection Module can not be programmed**

   8.1. Ignition ON/Vehicle in Service Mode for 1 min.

   8.2. Ignition/Vehicle OFF.

8.3. Access SPS and follow the on-screen instructions for the K313 Interior Object Detection Module.

Note: If programming is still not successful after the second programming attempt, check the following:

- For facilities using an internet firewall, ensure firewall settings are not blocking file downloads and/or require elevated rights.
- For United States and Canada GM dealers, the appropriate firewall settings can be found in the GM DEALER INFRASTRUCTURE & SECURITY GUIDELINES (DISG) section 2.d.vii.

8.4. Verify the K313 Interior Object Detection Module can be programmed.

⇒ If the K313 Interior Object Detection Module can not be programmed, replace the K313 Interior Object Detection Module.

⇓ If the K313 Interior Object Detection Module can be programmed

8.5. Clear DTCs.

⇓ **If the K313 Interior Object Detection Module can be programmed**

9. Clear DTCs.

Repair Instructions

Perform the Diagnostic Repair Verification after completing the repair: *Diagnostic Repair Verification 2-375*.

For control module replacement, programming, and setup, refer to: *Control Module References 2-4*.

P16 Instrument Panel Cluster Control Module: Programming and Setup

Note:

- DO NOT program a control module unless directed to by a service procedure or a service bulletin. If the ECU is not properly configured with the correct calibration software, the ECU will not control all of the vehicle features properly.
- Ensure the programming tool is equipped with the latest software and is securely connected to the data link connector. If there is an interruption during programming, programming failure or ECU damage may occur.
- Stable battery voltage is critical during programming. Any fluctuation, spiking, over voltage or loss of voltage will interrupt programming. When required, install a battery maintainer or power supply that provides a steady and stable voltage. Do not use a battery charger, as charging voltage will often fluctuate when connected to the vehicle. This may interrupt programing. If a battery maintainer is not available, connect a fully charged 12 V jumper or booster pack disconnected from the AC voltage supply.
- Turn OFF or disable systems that may put a load on the vehicles battery such as; interior lights, exterior lights (including daytime running lights), and HVAC.
- During the programming procedure, follow the SPS prompts for the correct ignition switch position.
- Clear DTCs after programming is complete. Clearing powertrain DTCs will set the Inspection/ Maintenance (I/M) system status indicators to NO.
- To prevent programming failure due to unintended wireless drops, It is recommended that a wired MDI connection be used when reprogramming the Instrument Cluster

Reference Information

Special Tools

EL-52100 Multiple Diagnostic Interface 2 (MDI 2)

Diagnostic Aids

The programming steps in the Service Programming System (SPS) screens may not be in functional order. Be sure to follow the programming steps in the order listed below.

Replace and Program ECU (UDC or UDD)

To program a replacement or an existing ECU, perform the following procedure:

1. Ignition ON/Vehicle in Service Mode.
2. Access the Service Programming System (SPS) and follow the on-screen instructions.
3. Ignition/Vehicle OFF.
4. On the SPS Supported Controllers screen, select P16 Instrument Cluster – Programming and follow the on-screen instructions.
5. On the SPS Supported Controllers screen, select P16 Instrument Cluster – Setup and follow the on-screen instructions.
6. Clear DTCs.

Replace and Program ECU (UDV or UHS)

To program a replacement or an existing ECU, perform the following procedure:

1. Ignition ON/Vehicle in Service Mode.

Note: Ensure programming of this module is performed using the EL-52100 (MDI 2). Using the EL-47955 (MDI) will result in a programming failure.

2. Access the Service Programming System (SPS) and follow the on-screen instructions.
3. Ignition/Vehicle OFF.

Note: In the event that an SPS selection screen appears and selecting Hardware ID is required, this refers to the new Instrument Panel Cluster Control Module hardware Bootloader part number which can be viewed in GDS2

4. On the SPS Supported Controllers screen, select P16 Instrument Cluster – Graphics Programming and follow the on-screen instructions.
5. On the SPS Supported Controllers screen, select P16 Instrument Cluster – Programming and follow the on-screen instructions.
6. On the SPS Supported Controllers screen, select P16 Instrument Cluster – Setup and follow the on-screen instructions.

Note: If Ethernet programming fails, ensure Instrument Cluster is communicating over ethernet properly. Refer to [Link target (target-id 300812-) not found]

8. Clear DTCs.

Reprogram ECU (UDC or UDD)

To program a replacement or an existing ECU, perform the following procedure:

1. Ignition ON/Vehicle in Service Mode.

Note: Ensure programming of this module is performed using the EL-52100 (MDI 2). Using the EL-47955 (MDI) will result in a programming failure.

2. Access the Service Programming System (SPS) and follow the on-screen instructions.
3. Ignition/Vehicle OFF.
4. On the SPS Supported Controllers screen, select P16 Instrument Cluster – Programming and follow the on-screen instructions.
5. Clear DTCs.

Reprogram ECU (UDV or UHS)

To program a replacement or an existing ECU, perform the following procedure:

1. Ignition ON/Vehicle in Service Mode.

Note: Ensure programming of this module is performed using the EL-52100 (MDI 2). Using the EL-47955 (MDI) will result in a programming failure.

2. Access the Service Programming System (SPS) and follow the on-screen instructions.
3. Ignition/Vehicle OFF.
4. On the SPS Supported Controllers screen, select P16 Instrument Cluster – Graphics Programming and follow the on-screen instructions.
5. On the SPS Supported Controllers screen, select P16 Instrument Cluster – Programming and follow the on-screen instructions.

Note: If Ethernet programming fails, ensure Instrument Cluster is communicating over ethernet properly. Refer to [Link target (target-id 300812-) not found]

7. Clear DTCs.

Unsuccessful Programming Recovery

Note:

- Ensure the *EL-52100* (MDI 2) is used when programming the vehicle. Using the EL-47955 (MDI) will result in a programming failure.
- It may be necessary to use another *EL-52100* (MDI 2) and/or cables to verify proper operation to eliminate the possibility of faulty equipment.
- If Ethernet programming fails, ensure there is no fault in the Ethernet circuits between the X84 Data Link Connector and K56 Serial Data Gateway Module. Refer to [Link target (target-id 300812-) not found] to diagnose these Ethernet circuits.

In the event of an interrupted or unsuccessful programming event, perform the following steps:

1. Exit Service Programming System (SPS) and disconnect all programming equipment from the vehicle.
2. Disconnect all battery voltage or ignition voltage sources from the control module. All voltage sources must be removed for a minimum of 10 min. This can be done several ways and should be completed by using the least intrusive way. This can vary depending on vehicle and control module location and can be done by one of the options listed below:
   - Removing all fuses supplying battery voltage and ignition voltage to the control module.
   - Disconnecting all harness connectors from the control module.

Warning: Always ensure the Battery Maintenance Mode is inactive before disconnecting the low voltage 12 volt battery (or batteries). This mode can be active with the ignition off, regardless of whether the vehicle charging cord is plugged in or not. When this mode is active, the on-board high voltage battery charger(s) will energize the 12 volt battery cables and charge the 12 volt battery (or batteries). Disconnecting any battery cables while this mode is active may result in an electrical shock or a burn from hot battery cable leads.

   - Check the 12 volt battery voltage with a digital multimeter before disconnecting any battery cables leads. If the voltage is 13.5 volts or above, the Battery Maintenance Mode is active. The technician must wait for the T18 battery charger to deactivate before disconnecting the battery negative cable. For more information

refer to *Charging System Description and Operation 4-9* . With Battery Maintenance Mode inactive, perform a 12 V battery disconnect by disconnecting the battery negative cable. Refer to [Link target (target-id 37733-) not found] .

3. Reconnect all battery voltage and ignition voltage sources to the control module.
4. Close down the current session of Techline Connect and reopen a new session.
5. Verify the control module, data link connector, and programming tool connections are secure and the tool software is up to date.
6. Ignition/Vehicle OFF, ensure that the key fob is inside the vehicle and not moved for the duration of the programming to prevent an inadvertent power mode change during programming.
7. Access the Service Programming System (SPS) and follow the on-screen instructions for the control module.
8. Verify the control module can be programmed.

⇒ **If the control module can not be programmed**

8.1. Ignition ON/Vehicle in Service Mode for 1 min.

8.2. Ignition/Vehicle OFF.

8.3. Access SPS and follow the on-screen instructions for the control module.

Note: If programming is still not successful after the second programming attempt, check the following:

- For facilities using an internet firewall, ensure firewall settings are not blocking file downloads and/or require elevated rights.
- For United States and Canada GM dealers, the appropriate firewall settings can be found in the GM DEALER INFRASTRUCTURE & SECURITY GUIDELINES (DISG) section 2.d.vii.

8.4. Verify the control module can be programmed.

⇒ If the control module can not be programmed, replace the control module.

⇓ If the control module can be programmed

8.5. Clear DTCs.

⇓ **If the control module can be programmed**

9. Clear DTCs.

T1 Accessory AC and DC Power Control Module: Programming and Setup

This device does not require programming or setup.

T3 Audio Amplifier: Programming and Setup

Note:

- DO NOT program a control module unless directed to by a service procedure or a service bulletin. If the ECU is not properly configured with the correct calibration software, the ECU will not control all of the vehicle features properly.
- Ensure the programming tool is equipped with the latest software and is securely connected to the data link connector. If there is an interruption during programming, programming failure or ECU damage may occur.
- Stable battery voltage is critical during programming. Any fluctuation, spiking, over voltage or loss of voltage will interrupt programming. When required, install a battery maintainer or power supply that provides a steady and stable voltage. Do not use a battery charger, as charging voltage will often fluctuate when connected to the vehicle. This may interrupt programing. If a battery maintainer is not available, connect a fully charged 12 V jumper or booster pack disconnected from the AC voltage supply.
- Turn OFF or disable systems that may put a load on the vehicles battery such as; interior lights, exterior lights (including daytime running lights), HVAC, , etc.
- During the programming procedure, follow the SPS prompts for the correct ignition switch position.
- Clear DTCs after programming is complete. Clearing powertrain DTCs will set the Inspection/ Maintenance (I/M) system status indicators to NO.

Diagnostic Aids

During programming you may be required to select multiple calibrations dependent upon vehicle equipment. Have the vehicle build/RPO information available during the following procedure to ensure the correct calibrations are selected.

Replace and Program Control Module or Reprogram Control Module

To program a replacement or an existing control module, perform the following procedure:

1. Ignition OFF, Vehicle OFF
2. Access the Service Programming System (SPS) and follow the on-screen instructions.
3. On the SPS Supported Controllers screen, select T3 Audio Amplifier – Programming and follow the on-screen instructions.
4. Clear DTCs.

Unsuccessful Programming Recovery

In the event of an interrupted or unsuccessful programming event, perform the following steps:

1. Ignition ON. Ensure the control module, DLC and programming tool connections are secure and the SPS software is up to date.
2. Verify the control module can be reprogrammed.

⇒ **If the control module cannot be reprogrammed**

2.1. Ignition OFF for one minute, ignition ON.

2.2. Verify the control module can be reprogrammed.

⇒ If the control module cannot be reprogrammed, replace the control module.

⇓ If the control module can be reprogrammed.

2.3. All OK.

⇓ **If the control module can be reprogrammed**

3. All OK.

T22 Wireless Accessory Charging Module: Programming and Setup

This device does not require programming or setup.

K111 Fuel Pump Power Control Module: Programming and Setup

This control module does not require SPS programming but does require the following setup procedures after a new control module is installed:

Setup for Component Replacement — Fuel Pump Driver Control Module Configuration/ Fuel Pump Power Control Module Configuration

1. Ignition » On / Vehicle » In Service Mode — For 2 min
2. Ignition/Vehicle » Off — For 2 min
3. Ignition » On / Vehicle » In Service Mode
4. Perform the following action: Clear the DTCs.
5. Start Engine
6. Verify DTC P1005 is not set

⇒ **If the DTC sets**

6.1. Perform the following action: Clear the DTCs.

6.2. Ignition/Vehicle » Off — For 2 min

6.3. Start Engine

6.4. Verify the DTC does not set.

⇒ If the DTC sets» Repeat the procedure starting at step 1

⇒ If the DTC is not set » Configuration— Complete

⇓ **If the DTC is not set**

7. Configuration— Complete

Serial Data Authentication Configuration

General Information

Serial Data Authentication Configuration (or Key Provisioning) enables secure communication between control modules over different communication channels. This is critical for maintaining communication security. It ensures sensitive data exchanged between control modules is encrypted, preventing tampering and unauthorized access.

- During the process, control module data is retrieved from the vehicle to generate unique cryptographic keys.
- These keys are then written to each control module, allowing secure communication between control modules.
- In the case of control module replacement, re-running the configuration is required to introduce the new control module to the network; otherwise, communication will fail due to unrecognized messages.

Reference Information

Special Tools
EL-52100 Multiple Diagnostic Interface 2 (MDI 2)

Serial Data Authentication Configuration

Note: Before attempting to perform the Serial Data Authentication Configuration procedure,

- Make sure all CAN control modules are connected and communicating.
- Diagnose the following communication DTCs first: DTC U0073-U007E, U0100-U02FF, U1100-U12FF, U1600-U17FF, U1977, U1978, U2200-U23FF, and U2400-U25FF.
- Diagnose the following programming DTCs: U3000 51, U3000 52, U3000 53, U3000 56, and U3000 57.
- If DTC U1962 is stored only as a history DTC and not retrieved as a current DTC, do not perform the Serial Data Authentication Configuration procedure.
- DO NOT perform the Serial Data Authentication Configuration procedure unless directed to by a service procedure or a service bulletin.
- Ensure the programming tool is equipped with the latest software and is securely connected to the data link connector. If there is an interruption during programming, programming failure or control module damage may occur.

- Stable battery voltage is critical during programming. Any fluctuation, spiking, over voltage or loss of voltage will interrupt programming. Check the 12 V battery with a digital multimeter and ensure the voltage is above 12.5 V. When required, install a battery maintainer or power supply that provides a steady and stable voltage. DO NOT use a battery charger, as charging voltage will often fluctuate when connected to the vehicle. This may interrupt programing. If a battery maintainer is not available, connect a fully charged 12 V jumper or booster pack disconnected from the AC voltage supply.

1. Ignition/Vehicle OFF, keep the key inside the vehicle.
2. Access the Service Programming System (SPS) and follow the on-screen instructions.

Note: The Serial Data Authentication Configuration button is located in the lower right corner of the SPS Supported Controllers screen in the Techline Connect system.

3. On the SPS Supported Controllers screen, select Serial Data Authentication Configuration button and follow the on-screen instructions.
4. Ignition/Vehicle OFF, disconnect the scan tool from the vehicle, all access doors closed, all vehicle systems OFF, and all keys at least 3 m (9.8 ft) away from vehicle. Allow the vehicle to go into sleep mode.
5. Ignition ON/Vehicle In Service Mode.
6. Using a scan tool, clear DTCs.

Troubleshooting

Serial Data Authentication Configuration can fail for several reasons. After confirming all control modules are fully programmed and that no underlying issues exist, follow these steps to attempt a successful configuration:

1. Verify X84 Data Link Connector (DLC) Connection: Ensure the X84 Data Link Connector is securely attached to the vehicle.
2. Use a Direct MDI 2 Connection: Connect the scan tool directly to the computer via a wired connection instead of using wireless connection (Techline Connect may need to be reset to change the connection type).
3. Disconnect the 12 V Battery: Reset the vehicle systems by disconnecting the 12 V battery negative cable for 1 min. For electric vehicles, check the 12 V battery voltage with a digital multimeter before disconnecting any battery cables leads. If the voltage is 13.5 V or above, the Battery Maintenance Mode is active. The technician must wait for the T18 Battery Charger to deactivate before disconnecting the battery negative cable. Follow the appropriate steps in the Battery Negative Cable Disconnection and Connection procedure located under the Starting, Charging, and Low Voltage Energy Storage category.
4. Perform the Serial Data Authentication Configuration procedure. If the procedure still fails, inspect the X84 Data Link Connector for contamination, corrosion, and terminal tension and inspect the wiring between the X84 Data Link Connector and K56 Serial Data Gateway Module for any faults.

In the case of a Serial Data Authentication Configuration failure, the SPS error window should point to which control module is failing:

- Function: “Key Provisioning” refers to Serial Data Authentication Configuration.
- Sub Function: refers to which step in the process failed.
- ECU: refers to the failing control module if that is the case.

If the Sub Function column in SPS error window points to a “Configure Link” error, run through the trouble shooting steps 1-4 above.

If no SPS error window is displayed, but the SPS screen indicates that Serial Data Authentication Configuration has Failed, run through the trouble shooting steps 1-4 above.

Service Programming System (SPS)

For step-by-step control module programming instructions, please refer to the techline information system (TIS) terminal.

Review the information below to ensure proper programming protocol.

Note:

- DO NOT program a control module unless you are directed by a service procedure or you are directed by a General Motors service bulletin. Programming a control module at any other time will not permanently correct a customers concern.
- It is essential that the TIS terminal, MDI/MDI2, and/or Scan Tool, is equipped with the latest software before performing service programming.
- Stable battery voltage is critical during programming. Any fluctuation, spiking, over voltage or loss of voltage will interrupt programming. When required, install a battery maintainer or power supply that provides a steady and stable voltage. Do not use a battery charger, as charging voltage will often fluctuate when

connected to the vehicle. This may interrupt programing. If a battery maintainer is not available, connect a fully charged 12 V jumper or booster pack disconnected from the AC voltage supply.

- Some modules will require additional programming/setup events to be performed before or after programming.
- Some vehicles may require the use of a CANDi or MDI/MDI2 module for programming.
- Review the appropriate service information for these procedures.
- DTCs may set during programming. Clear DTCs after programming is complete.
- Clearing powertrain DTCs will set the Inspection/ Maintenance (I/M) system status indicators to NO.

Ensure the following conditions are met before programming a control module:

1. Vehicle system voltage:
   - There is not a charging system concern. All charging system concerns must be repaired before programming a control module.
   - Battery voltage is greater than 12 volts but less than 16 volts. The battery must be fully charged before programming the control module.
   - Turn OFF or disable any system that may put a load on the vehicles battery, such as the following components:
     - Interior lights
     - Exterior lights including daytime running lights (DRL)—Applying the parking brake, on most vehicles, disables the DRL system
     - Heating, ventilation, and air conditioning (HVAC) systems
     - Engine cooling fans
     - Radio, etc.
2. The ignition switch must be in the proper position. SPS prompts you to turn ON the ignition, with the engine OFF. DO NOT change the position of the ignition switch during the programming procedure, unless instructed to do so.
3. Make certain all tool connections are secure, including the following components and circuits:
   - Scan Tool
     - The RS-232 communication cable port
     - The connection at the data link connector (DLC)
     - The voltage supply circuits
   - MDI/MDI2
     - The USB, Ethernet or Wireless communication port
     - The connection at the data link connector (DLC)
4. DO NOT disturb the tool harnesses while programming. If an interruption occurs during the programming procedure, programming failure or control module damage may occur.

In the event of an interrupted or unsuccessful programming event, perform the following steps:

1. DO NOT turn the ignition OFF. Ensure that all control module and DLC connections are secure and the TIS terminal operating software is up to date.
2. Attempt to reprogram the control module.
3. If the control module can still not be programmed, turn the ignition OFF for at least one minute.
4. Turn the ignition ON and attempt to reprogram the control module. The control module should program.
   ⇒ If the control module still cannot be programmed, replace the control module.

After successfully programming the control module, ensure that all post programming procedures are performed; refer to *Control Module References 2-4* for the appropriate control module Programming and Setup document for any required procedures.

Q77 Transmission Control Solenoid Valve Characterization Programming

The solenoids in this transmission require unique performance characteristic data in order to function at maximum efficiency. This data is programmed and stored in the vehicle's transmission control module (TCM). When a transmission assembly, TCM, or solenoids are replaced during service, the performance characteristic data for the solenoids must be retrieved from a web server "cloud" repository and reprogrammed into the TCM.

Reprogramming also ensures that the characteristic data relationship is properly matched between the solenoids, valve body, and transmission.

Solenoid characterization reprogramming is performed using the TIS2Web Service Programming System (SPS).

Solenoid Reprogramming Procedure

Perform solenoid characterization reprogramming after one of the following service procedures:

Note: Select "Replace Transmission" at the MCVM Characterization selection screen.

- Replace transmission assembly

Note: Select "Replace Control Valve Solenoid Body" at the MCVM Characterization selection screen.

- Replace control valve solenoid body

Note: Select “Replace Solenoid” at the MCVM Characterization selection screen.

- Replace solenoid (currently not an available Service Procedure)

Note: Select “Refresh Characterization Data” at the MCVM Characterization selection screen.

- Replace TCM

To perform solenoid characterization after a transmission component replacement:

1. Document the new Transmission Unique Number (TUN). The TUN location may be found here: [Link target (target-id 278357-) not found] . Since the TUN can be difficult to access when the transmission is installed in the vehicle, ensure you document the 16-digit TUN prior to installing the transmission in the vehicle.
2. Use a generically available QR Code/data matrix scanner to obtain the Part Unique Number (PUN). The PUN location may be found here: [Link target (target-id 285256-) not found] . Before installing the control valve solenoid body onto the transmission, scan the data matrix.
3. Log into TIS2Web/SPS.
4. Type the vehicle identification number (VIN).
5. Perform the SPS Transmission Control Module programming event.
   - Select “Transmission Control Module - Programming” to update TCM calibrations and Solenoid Characterization data.

     OR
   - Select “Transmission Control Module - MCVM Operations” to update Solenoid Characterization data only.
6. From the “MCVM (Mechanical Characterization and Virtual Matching) Operation Selection” screen, select the applicable service procedure to be performed. You will be prompted to provide the necessary Transmission Unique Number (TUN) when replacing a transmission part.

At this point, the system will read the VIN from the engine control module (ECM) using the multiple diagnostic interface (MDI) and then retrieve the applicable genealogy data tree from the cloud. This data tree accesses the original characterization data so that it may be updated with the new component information. The system acquires characterization data for the given TUN/PUN via the cloud and updates the genealogy tree. The TCM is updated with the correct solenoid characterization data, and the cloud is updated with the new genealogy relationship.

Vehicle Wide Programming and Setup

Important:

- If ANY module is replaced, program the single module first prior to Vehicle Wide Programming.
- Verify the programming tool is equipped with the latest software and is securely connected to the data link connector. If there is an interruption during programming, programming failure or control module damage may occur.
- Before downloading the update files, be sure the computer is connected to the internet through a network cable (hardwired). DO NOT DOWNLOAD or install the files wirelessly. If there is an interruption during programming, programming failure or control module damage may occur.
- Stable battery voltage is critical during programming. Any fluctuation, spiking, over voltage or loss of voltage will interrupt programming. When required, install a battery maintainer or power supply that provides a steady and stable voltage. Do not use a battery charger, as charging voltage will often fluctuate when connected to the vehicle. This may interrupt programming. If a battery maintainer is not available, connect a fully charged 12 V jumper or booster pack disconnected from the AC voltage supply.
- Turn OFF or disable systems that may put a load on the vehicle's battery such as interior lights, exterior lights (including daytime running lights), HVAC, radio, etc.

Description

Vehicle Wide Programming (VWP) is a new process to update software on GM Vehicles. It provides the ability via a single selection within Techline Connect to first identify which modules need updating and then proceed to updating affected modules (with some exceptions). The updating of modules is completed in parallel instead of forcing the technician to update one module at a time. This allows a more streamlined approach reducing technician time and number of required steps.

Diagnostic Aids

Note: Vehicle Wide Programming will only work with a wired MDI2 connection. It is also necessary to remove any wireless dongles from the computer being used as these will not allow the Vehicle Wide Programming to be selectable. If the Vehicle Wide Programming is not selectable with a wired MDI2, confirm it shows disconnected in SPS2 and then (if needed) exit out of TLC and log-in again.

- Ensure the programming tool is equipped with the latest software and is securely connected to the

data link connector. If there is an interruption during programming, programming failure or control module damage may occur.

- Stable battery voltage is critical during programming. Any fluctuation, spiking, over voltage or loss of voltage will interrupt programming. Install a GM Authorized Programming Support Tool to maintain system voltage. Refer to www.gmdesolutions.com for further information. If not available, connect a fully charged 12 V jumper or booster pack disconnected from the AC voltage supply. DO NOT connect a battery charger.
- Prior to starting any programming, all aftermarket devices should be removed from the DLC and USB devices disconnected from the USB ports.
- Follow the on-screen prompts regarding ignition power mode, but ensure that anything that drains excessive power (exterior lights, HVAC blower motor, etc) is off.
- Clear DTCs after programming is complete. Clearing powertrain DTCs will set the Inspection/ Maintenance (I/M) system status indicators to NO.
- For the TLC application, service technicians need to always ensure that the power mode (ignition) is “ON” before reading the VIN from the vehicle’s VIN master module and that they do not select a VIN that is already in the TLC application memory from a previous vehicle.
- If the VIN that shows up in the TLC top center window after correctly reading the VIN from the vehicle does not match the VIN plate of the vehicle, manually type in the VIN characters from the vehicle VIN plate into the TLC top center window and use these for programming or reprogramming the subject module with the correct vehicle VIN and software and/or calibrations.
- The Engine Control Module (ECM) is the master module that TLC reads to determine the VIN of the vehicle. If the VIN read from the vehicle by TLC does not match the VIN plate of the vehicle, the ECM also needs to be reprogrammed with the correct VIN, software and calibrations that match the vehicle’s VIN plate.
- Check for Preliminary information or Technical Service bulletins before programming.
- During programming you may be required to select multiple calibrations dependent upon vehicle equipment. Have the vehicle build/RPO information (available through Investigate Vehicle History) available during the following procedure to ensure the correct calibrations are selected.

Note: Verify that the VIN displayed in the TLC left side drop down menu and the top center window match the VIN plate of the vehicle to be programmed prior to using Service Programming System 2 (SPS2) for programming or reprogramming a module.

Reference Information

Special Tools

- EL-52100 Multiple Diagnostic Interface 2 (MDI 2)

For equivalent regional tools, refer to *Special Tools 2-72*.

Service Procedure

Note:

- Vehicle Wide Programming will only work with a wired MDI2 connection. It is also necessary to remove any wireless dongles from the computer being used as these will not allow the Vehicle Wide Programming to be selectable. If the Vehicle Wide Programming is not selectable with a wired MDI2, confirm it shows disconnected in SPS2 and then (if needed) exit out of TLC and log-in again.
- The screenshots below are an example of module programming and may not be indicative of the specific module that is being programmed. Module selection and VIN information have been blacked out.

1. Ensure all aftermarket devices are removed from the DLC and USB devices disconnected from the USB port.
2. Verify the radio software is up to date.

⇒ If the radio software is NOT up to date:

Update the radio to the latest software level before proceeding.

⇓ If the radio software IS up to date

3. Open SPS2 and enter job card number, then click next.

6693816

Note: Only the control modules with a green car icon are supported by VWP. All other control modules may need to be programmed individually as previously done. The Vehicle-Wide Programming Summary report will indicate any other modules needing separate programming once VWP is complete.

4. To perform a VWP event, select the blue button on the right side. If unable to select, verify the wired MDI2 connection.

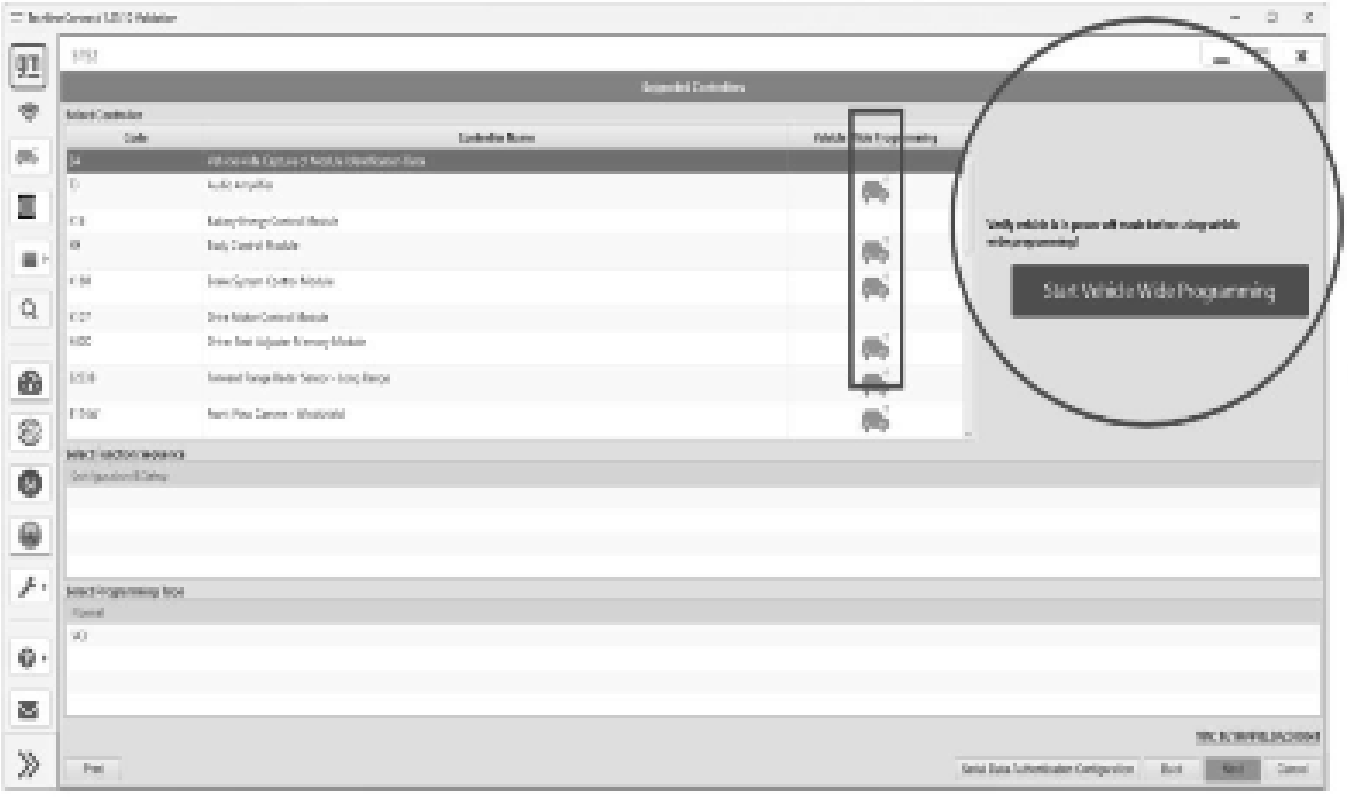

6693969

5. An SPS3 page will open and VWP will begin.

6693970

Below is a description of each Techline Connect bar.

- **Retrieving Data From Vehicle:** During this step, Techline Connect is retrieving current software information from the vehicle.
- **Retrieving Data From Sever:** Utilizing the VIN information, Techline Connect is retrieving the latest software information from General Motors.
- **Downloading:** Performs comparison and downloads required fields for installation.
- **Programming:** Installing updated software into the modules.

Note: While it is saved automatically, it is recommended for the tech to print/capture anything noted as failed or out of date before exiting the screen.

6. Once complete, a Vehicle-Wide Programming Summary screen will appear. This will list all modules that are up to date or may require manual update. It will also advise of any failures. It will also advise to check the A11 Radio separately as it is not included in VWP.

Vehicle-Wide Programming Summary

Unless not supported (i.e., Radio), please execute 'Vehicle Wide Programming' twice before using SPS2 to update a failed ECU

Controller Status

Component Code	Controller (ECU) Name	VWP Result	Status
A11	Radio	Not Supported	Up-to-date
D233	Short Range Radar Sensor	Success	Up-to-date
D233B	Forward Range Radar Sensor - Long Range	Success	Up-to-date
K124	Image Processing Module	Success	Up-to-date
K16	Battery Energy Control Module	Success	Up-to-date
K182	Parking Assist Control Module	Success	Up-to-date
K219	Lighting Control Module	Success	Up-to-date
K36	Headlamp Control Module	Success	Up to date
K40	Power Steering Control Module	Success	Up-to-date
K73	Telematic Control Module	Success	Up to date
K9	Body Control Module	Success	Up to date

6693975

B174W	Front View Camera - Windshield	Not Required	Up-to-date
K107	Drive Motor Control Module	Not Required	Up-to-date
K160	Brake System Control Module	Not Required	Up-to-date
K194	Rear Gate Module	Not Required	Up-to-date
K36	Restraints Control Module	Not Required	Up-to-date
K40D	Driver Seat Adjuster Memory Module	Not Required	Up-to-date
K40P	Passenger Seat Adjuster Memory Module	Not Required	Up-to-date
K56	Serial Data Gateway Module	Not Required	Up-to-date
K85P	Restraints Occupant Classification System Module - Passenger	Not Required	Up-to-date
T3	Audio Amplifier	Not Required	Up-to-date

PLEASE NOTE: This summary page is not a warranty claim code or a replacement for a warranty claim code!

6693976

Important: To avoid warranty transaction rejections, you MUST record the warranty claim code provided on the Warranty Claim Code (WCC) screen shown below on the job card.

7. Once complete, the warranty claim code page will populate with details of a completed, partial, or failed programming event. Any failures will be shown at the top highlighted in red. Any successful or skipped modules will be collapsed but are viewable in a printout or by selecting them individually.

6693875

Programming Status:

- **Completed:** Event indicates that all control modules were successfully programmed (Some of the modules could show skipped if the module already had the latest software).
- **Blocked:** An overall status of blocked will appear if all modules were already up to date and no actual programming was attempted.
- **Partial:** Status indicates that at least one control module failed to program. Failed control modules will be highlighted in red.
- **Failed:** Indicates that all control modules failed to program.
- **Skipped:** Individual control modules indicate that the module is up to date and no further programming needed.

Important: If a failed programming event happens, VWP should be repeated one time prior to utilizing SPS 2 to program the affected Module(s). A separate warranty code will be displayed.

8. For all Modules that are not supported by VWP, complete their programming utilizing the SPS2 application.

9. Use GDS2 to clear any DTCs after successfully programming.

Unsuccessful Vehicle Wide Programming

Note:

- Ensure the *EL-52100* (MDI 2) is used when programming the vehicle. Using the EL-47955 (MDI) will result in a programming failure.
- It may be necessary to use another *EL-52100* (MDI 2) and/or cables to verify proper operation to eliminate the possibility of faulty equipment.
- If Ethernet programming fails, ensure there is no fault in the Ethernet circuits between the X84 Data Link Connector and K56 Serial Data Gateway Module. Refer to [Link target (target-id 300812-) not found] to diagnose these Ethernet circuits.

In the event of an interrupted or unsuccessful programming event, perform the following steps:

1. Attempt to perform Vehicle Wide Programming a second time.
2. Verify no modules have failed programming during the VWP event.

⇒ **If ANY single module fails Vehicle Wide Programming:**

2.1. Attempt to program the applicable module again. Refer to: *Control Module References 2-4*

2.2. If the module still cannot be programmed, contact Techline Customer Support Center (TCSC) for programming instructions.

⇒ **If ALL modules fail Vehicle Wide Programming**

If the module still cannot be programmed, contact Techline Customer Support Center (TCSC) for programming instructions.

⇓ **If all applicable modules pass Vehicle Wide Programming:**

Clear DTCs.

Repair Instructions

Perform the Diagnostic Repair Verification after completing the repair: *Diagnostic Repair Verification 2-375*.

Control Module References 2-4 for control module replacement, programming, and setup.

Description and Operation

Over The Air Description and Operation

Each item in the list below represents topics covered in detail below.

- Over The Air (OTA) Description
- OTA Software Download
- Installing an Update
- Deferring or Declining an Update
- Unable to Complete
- Proper Battery Charging

Over The Air (OTA) Description

The Over The Air (OTA) feature was designed to install vehicle software updates remotely. Remote software update is an in-vehicle feature that enables the installation of a software package to update certain modules without requiring service test equipment to be physically connected to the vehicle. Remote software updates will utilize a long range or short range connection from the host module to a remote IT system. There must be an active 4G LTE or WiFi connection to download and install vehicle software updates. The customer does not need an active OnStar subscription but they do need to accept the vehicle Terms and Conditions to be eligible to receive OTA vehicle software updates.

Note: Fleet vehicles must be activated as a Fleet account (not a business account) and require a separate Terms and Conditions agreement to be completed. Please see your fleet administrator for assistance with completing this agreement.

OTA software updates that are pushed to vehicles remotely continue to expand in frequency and use on GM models. Vehicles using the Global A electrical architecture can support three modules for OTA updates, such as the radio, OnStar, and Serial Data Gateway modules.

The new Vehicle Intelligence Platform (VIP) electrical architecture, introduced on some 2020 vehicles and beyond, powers a new electronic system that is capable of managing up to 4.5 terabytes of data processing power per hour, which is a fivefold increase in capability over the previous Global A electrical architecture. On vehicles using the VIP architecture, virtually all modules can support OTA updates, which means that the OTA software is not only for the infotainment system.

When an OTA update has been downloaded to a vehicle and is available to be installed, a message is displayed on the infotainment screen notifying the driver of the impending update. The message to accept and install an OTA update will not appear until the minimum values for the battery State of Charge (SOC) and Outside Ambient Temperature (OAT) are met.

OTA Software Download

An OTA update can be pushed to a vehicle while the vehicle is parked or being driven. There is an option for notification to the driver that the software update is being downloaded to the vehicle, the default setting is set to off. Battery SOC and OAT values are not checked before a download. These checks are only performed once the software update is downloaded and ready to be installed.

The OTA software download can occur in increments. Download will not be paused while the vehicle is being driven, it continues in the background. If the vehicle is turned off the download will continue for a maximum of 10 minutes. If the download did not complete it will continue on the next ignition cycle from where it stopped.

Installing an Update

Once the OTA software is downloaded, a message on the infotainment screen will display a prompt to accept the installation. The customer does not need to remain in the vehicle during the installation of the software. However, the vehicle cannot be driven during the installation and certain vehicle features may not be available. It's not required for the ignition to be ON for the installation to begin.

Installation time will vary based on the size of the update. The average installation will take approximately 15 minutes. Depending on the module, it may take longer to complete. The "Accept" message on the infotainment screen will provide an estimation of the approximate installation time. The customer may also comment that the radio appears to stay on after exiting the vehicle.

Deferring or Declining an Update

When an OTA update is downloaded, customers have the option to defer or decline the installation. The standard policy for OTA software updates is to set the customer notifications to 30 ignitions cycles. If the customer does not act upon the prompts within this counter, the update package is removed from the vehicle.

If a customer ignores the notification, the ignition cycle counter decreases by one immediately.

If the customer defers the installation by selecting the "Remind Me Later" option, the ignition cycle counter decreases by one, but it will not decrease again until after the customer-selected "Remind Me Later" period, regardless of the number of ignition cycles that occur during that period. For example, if 24 hours is selected for the next remind me time frame and I did 20 ignition cycles, those 20 ignition cycles do not decrease the ignition cycle counter.

Note: For customer use case, standard operating procedure for campaign is to set the notifications to 30 ignitions cycles. If the Customer does not act upon the prompts within this counter, the package / invite is removed from the vehicle. In this scenario, we will wait 2 weeks and re-enroll back into the campaign. FYI: this counter can be selected from 1 to 999 ignition cycles when setting up the campaign.

If the OTA update installation is deferred by the customer, it can be installed at a later date through the Vehicle Software menu under Settings > System on the infotainment screen.

If the customer selects the "Decline Update" option, the update package is immediately removed from the vehicle. In this case, the vehicle will not be re-enrolled to receive the OTA update at a later date, unless the update is a Field Action. OTA updates will not be installed in a vehicle without a customer's consent. One exception with Constraint Consent use case there is a "May day" counter set in the vehicle, typically 10 ignition cycles. The Customer has that many ignition cycles to complete the update. Upon using all notifications, the installation will take place once this counter has expired. This use case is only for Cyber Critical recall Field Actions and requires Global Safety Field Investigations approval to utilize this use case. To date, this use case has not been used for any field actions.

Unable to Complete

There are a number of criteria that must be met in order to successfully complete the software update installation on a vehicle. The most common cause of being unable to complete an installation is the State of Charge (SOC) of the 12V battery. If the 12V battery does not meet the minimum SOC requirement of 70 percent or greater along with an Outside Ambient Temperature (OAT) greater than 14°F (-10°C), the OTA update installation will not occur. The colder the ambient air temperature is, the higher the target SOC becomes. To determine the battery SOC for VIP vehicles, go to BCM/12V Battery/Battery Sensor Module – State of Charge in GDS 2.

There may be other conditions that will affect an OTA update installation. If any of these conditions are present, a “Vehicle Conditions Not Ideal” message may display on the infotainment screen stating that conditions are not ideal to proceed with the update installation. These conditions do not indicate a failure; only that the vehicle does not meet all the criteria necessary to complete the OTA update installation.

Some customers may comment that the radio appears to stay on or is backlit after exiting the vehicle. If this occurs, it’s a telltale sign that an OTA update is in progress.

If an OTA fails to update ensure there is no 3rd party dongle connected to the ALDL of the vehicle. This could block an OTA from completing.

Proper Battery Charging

If a low battery SOC is preventing the OTA update installation, the 12V battery should be charged to meet the target SOC of 70 percent.

On some GM models, connecting the battery charger directly to the 12V battery posts will bypass the Battery Sensor Module, resulting in a default SOC value of 65 percent and a “Conditions Not Met” message.

Note: The Battery Sensor Module is attached directly to the battery negative terminal. It determines the battery condition by calculating the battery SOC, functions, and state of health, which is used to help determine if the 12V Stop/Start system will allow an Auto Stop when the vehicle has come to a stop. To properly charge the battery, the negative lead of the charger must be connected to chassis ground, and not directly to the negative battery post. Connecting to chassis ground allows current to flow through the Battery Sensor Module during charging as well as be monitored. The current cannot be monitored by the Battery Sensor Module if the negative lead of the charger is directly connected to the negative battery post.If a battery is improperly charged, the Battery Sensor Learn will be required to calibrate the Battery Sensor Module. With the ignition off, let the vehicle rest for a minimum of four hours without any interruptions (opening a door, using the key fob, etc.). Verify if the battery SOC is 70 percent or greater using GDS 2 before attempting to continue with an OTA update.

Special Tools and Equipment

Special Tools

Illustration	Tool Number/ Description
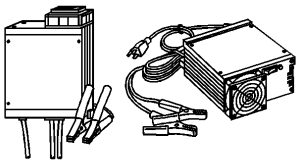 2223727	EL 49642 SPS Programming Support Tool
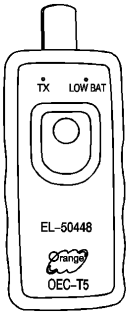 2563769	EL 50448 Tire Pressure Monitor Sensor Activation Tool
5443144	EL 52100 Multi Diagnostic Interface 2 (MDI 2)

Illustration	Tool Number/ Description
5331982	EL 52545 Tire Pressure Monitor Sensor and RF Diagnostic Tool
5608151	EL 52800 Battery Charger/Tester

Vehicle Diagnostic Information

Specifications

A11 Radio: Scan Tool Information

A11 Radio: Scan Tool Information

Parameter	System State	Expected Value	Description
Operating Conditions: Ignition ON			
Data Display			
• Infotainment System Status	—	Run	Indicates the status of the infotainment system.
• Rearview Camera Supply Current	—	Varies	Indicates the rearview camera supply current
• Rearview Camera Supply Voltage	—	10V	Indicates the rearview camera supply voltage..
• Control Module Temperature Sensor 1	—	Varies	This displays the temperature reading of the control module temperature sensor 1.
• Control Module Temperature Sensor 2	—	Varies	This displays the temperature reading of the control module temperature sensor 2.
• Control Module Operation Mode	—	Run	This displays the current operational mode of the control module.
• Battery Saver Mode	—	On/Off	Indicates if battery saver mode is active.
Ethernet Bus Data			
• Ethernet Bus Master Clock	—	Yes/No	Ethernet Bus Master Clock
• Rear Seat Infotainment Module to Radio Ethernet Data Received	—	Yes/No	Indicates if the radio has received data from the rear seat infotainment module.
• Telematics Control Module to Radio Ethernet Data Ready To Transmit	—	Yes/No	Indicates if the telematics control module ethernet data is ready to transmit to the radio.
• Ethernet Port 0 Receive Failure Count	—	Varies	Displays failures in counts (Rear Seat Infotainment)
• Ethernet Port 0 Transmit Failure Count	—	Varies	Displays failures in counts (Rear Seat Infotainment)
• Ethernet Port 1 Receive Failure Count	—	Varies	Displays failures in counts (Audio Amplifier)
• Ethernet Port 1 Transmit Failure Count	—	Varies	Displays failures in counts (Audio Amplifier)
• Ethernet Port 2 Receive Failure Count	—	Varies	Displays failures in counts (Central Gateway Module)
• Ethernet Port 2 Transmit Failure Count	—	Varies	Displays failures in counts (Central Gateway Module)
• Ethernet Port 3 Receive Failure Count	—	Varies	Displays failures in counts (Telematics Control Module)
• Ethernet Port 3 Transmit Failure Count	—	Varies	Displays failures in counts (Telematics Control Module)

Parameter	System State	Expected Value	Description
• Ethernet Port 4 Receive Failure Count	—	Varies	Displays failures in counts
• Ethernet Port 4 Transmit Failure Count	—	Varies	Displays failures in counts
• Ethernet Port 5 Receive Failure Count	—	Varies	Displays failures in counts
• Ethernet Port 5 Transmit Failure Count	—	Varies	Displays failures in counts
• Ethernet Port 6 Receive Failure Count	—	Varies	Displays failures in counts
• Ethernet Port 6 Transmit Failure Count	—	Varies	Displays failures in counts
• Ethernet Port 0 IP Address	—	Varies	Displays ethernet IP address
• Ethernet Port 1 IP Address	—	Varies	Displays ethernet IP address
• Ethernet Port 2 IP Address	—	Varies	Displays ethernet IP address
• Ethernet Port 3 IP Address	—	Varies	Displays ethernet IP address
• Ethernet Port 4 IP Address	—	Varies	Displays ethernet IP address
• Ethernet Port 5 IP Address	—	Varies	Displays ethernet IP address
• Ethernet Port 6 IP Address	—	Varies	Displays ethernet IP address
Configuration Data			
• Manufacturer Enable Counter	—	Varies	Displays in counts
Bluetooth Data			
• Number of Bluetooth Devices Connected	—	Varies 1–10	Indicates the number of Bluetooth paired to the vehicle.
• Bluetooth Device 1: Connection Status	—	Varies	Indicates the device status. (0) Unconnected, (1) Connected / Idle, (2) Call active, (3) 3-way calling active
• Bluetooth Device 1: Friendly Name	—	Varies	The scan tool displays a decimal value between 0 and 255.
• Bluetooth Device 2: Connection Status	—	Varies	Indicates the device status. (0) Unconnected, (1) Connected / Idle, (2) Call active, (3) 3-way calling active
• Bluetooth Device 2: Friendly Name	—	Varies	Displays the bluetooth phone to telematics communication interface control module status.
• Bluetooth Device 3: Connection Status	—	Varies	Indicates the device status. (0) Unconnected, (1) Connected / Idle, (2) Call active, (3) 3-way calling active
• Bluetooth Device 3: Friendly Name	—	Varies	Indicates the name given to the paired device
• Bluetooth Device 4: Connection Status	—	Varies	Indicates the device status. (0) Unconnected, (1) Connected / Idle, (2) Call active, (3) 3-way calling active

Parameter	System State	Expected Value	Description
• Bluetooth Device 4: Friendly Name	—	Varies	Indicates the name given to the paired device
• Bluetooth Device 5: Connection Status	—	Varies	Indicates the device status. (0) Unconnected, (1) Connected / Idle, (2) Call active, (3) 3-way calling active
• Bluetooth Device 5: Friendly Name	—	Varies	Indicates the name given to the paired device
• Bluetooth Device 6: Connection Status	—	Varies	Indicates the device status. (0) Unconnected, (1) Connected / Idle, (2) Call active, (3) 3-way calling active
• Bluetooth Device 6: Friendly Name	—	Varies	Indicates the name given to the paired device
• Bluetooth Device 7: Connection Status	—	Varies	Indicates the device status. (0) Unconnected, (1) Connected / Idle, (2) Call active, (3) 3-way calling active
• Bluetooth Device 7: Friendly Name	—	Varies	Indicates the name given to the paired device
• Bluetooth Device 8: Connection Status	—	Varies	Indicates the device status. (0) Unconnected, (1) Connected / Idle, (2) Call active, (3) 3-way calling active
• Bluetooth Device 8: Friendly Name	—	Varies	Indicates the name given to the paired device
• Bluetooth Device 9: Connection Status	—	Varies	Indicates the device status. (0) Unconnected, (1) Connected / Idle, (2) Call active, (3) 3-way calling active
• Bluetooth Device 9: Friendly Name	—	Varies	Indicates the name given to the paired device
• Bluetooth Device 10: Connection Status	—	Varies	Indicates the device status. (0) Unconnected, (1) Connected / Idle, (2) Call active, (3) 3-way calling active
• Bluetooth Device 10: Friendly Name	—	Varies	Indicates the name given to the paired device
GPS Data			
Longitude at Last GPS Fix	—	Varies	Indicates the longitude coordinates at the last GPS signal reveived
Latitude at Last GPS Fix	—	Varies	Indicates the latitude coordinates at the last GPS signal reveived
Audio Data			
Left Rear Audio Output	—	Active/Not Active	Indicates the status of the audio output
Right Front Audio Output	—	Active/Not Active	Indicates the status of the audio output
Left Front Audio Output	—	Active/Not Active	Indicates the status of the audio output
Right Rear Audio Output	—	Active/Not Active	Indicates the status of the audio output
Current AM Frequency	—	Varies	Indicates the current frequency the radio is set to
Current FM Frequency	—	Varies	Indicates the current frequency the radio is set to
Auxiliary Input Data			
Infotainment Control Switch, Switch 1	—	Yes/No	Indicates if the switch is pressed
Infotainment Control Switch, Switch 2	—	Yes/No	Indicates if the switch is pressed
Infotainment Control Switch, Switch 3	—	Yes/No	Indicates if the switch is pressed
Infotainment Control Switch, Switch 4	—	Yes/No	Indicates if the switch is pressed

Parameter	System State	Expected Value	Description
Infotainment Control Switch, Switch 5	—	Yes/No	Indicates if the switch is pressed
Infotainment Control Switch, Switch 6	—	Yes/No	Indicates if the switch is pressed
Infotainment Control Switch, Switch 7	—	Yes/No	Indicates if the switch is pressed
Infotainment Control Switch, Switch 8	—	Yes/No	Indicates if the switch is pressed
Infotainment Control Switch, Knob 1 Push Switch	—	Yes/No	Indicates if the switch is pressed
Infotainment Control Switch, Knob 1 Rotary Position	—	Varies	Displays the counts when the knob is turned
Infotainment Control Switch, Knob 2 Push Switch	—	Yes/No	Indicates if the switch is pressed
Infotainment Control Switch, Knob 2 Rotary Position	—	Varies	Displays the counts when the knob is turned

A11 Radio: Scan Tool Output Controls

Output Control	Description
Display Check	
Info Display Dimming	Allows control of the info display dimming
Backlight Dimming	Allows control of the backlight dimming
Rearview Camera Display	Allows the rearview camera to be turned on and off
Radio Controls	
Radio Tuner AM Frequency	Allows control of the AM tuner frequency
Radio Tuner FM Frequency	Allows control of the FM tuner frequency

B174W Front View Camera - Windshield: Scan Tool Information (with UGN)

Identification Information

Parameter	System State	Expected Value	Definition
Operating Conditions: Ignition ON			
Module Diagnostic Address	–	Varies	The scan tool displays the Software Module 1 Identifier
Base Model Part Number	–	Varies	The scan tool displays the Base Model Part Number
End Model Part Number	–	Varies	The scan tool displays the End Model Part Number
Date Programmed	–	Varies	The scan tool displays the Date Programmed
Adaptive Cruise Control Disengage Hisotry Data	–	–	Refer to: Driver Assistance Systems Disable History Conditions
Adaptive Cruise Control Disengage Hisotry Data	–	–	Refer to: Driver Assistance Systems Disable History Conditions
Front Impact Mitigation Disable History Data	–	–	Refer to: Driver Assistance Systems Disable History Conditions
Lane Keep Assist Disable History	–	–	Refer to: Driver Assistance Systems Disable History Conditions
Parking Assist Disable History Data	–	–	Refer to: Parking Assist Systems Disable History Conditions
Rear Impact Mitigation Disable History Data	–	–	Refer to: Driver Assistance Systems Disable History Conditions

Parameter	System State	Expected Value	Definition
Trailer System Induced Disable History Data	–	–	Refer to: Driver Assistance Systems Disable History Conditions
Vehicle Dynamic System Disable History Data	–	–	Refer to: Driver Assistance Systems Disable History Conditions

B174W Front View Camera - Windshield: Scan Tool Information (without UGN)

Identification Information

Parameter	System State	Expected Value	Definition
Operating Conditions: Ignition ON			
Module Diagnostic Address	–	Varies	The scan tool displays the Software Module 1 Identifier
Base Model Part Number	–	Varies	The scan tool displays the Base Model Part Number
End Model Part Number	–	Varies	The scan tool displays the End Model Part Number
Date Programmed	–	Varies	The scan tool displays the Date Programmed

Data Display

Parameter	System State	Expected Value	Definition
Operating Conditions: Ignition ON			
Frontview Camera Module Learn Mode Status	–	Learn Successful	The scan tool displays the current learn status of the B174W Frontview Camera - Windshield
Frontview Camera Module Learn Mode Progress	–	100%	The scan tool displays the current learn progress of the B174W Frontview Camera - Windshield as a percentage
Yaw Rate	–	Varies	The scan tool displays the yaw offset of the B174W Frontview Camera - Windshield
Traffic Sign Memory	–	Varies	The scan tool displays if traffic sign memory is Active or Off

B218L Side Obstacle Detection Control Module - Left: Scan Tool Information

Identification Information

Parameter	System State	Expected Value	Definition
Operating Conditions: Ignition ON			
Vehicle Identification Number (VIN)	–	Varies	The scan tool displays the vehicle VIN number
Last Dealer Code or Scan Tool Serial Number	–	Varies	The scan tool displays the Last Dealer Code or Scan Tool Serial Number
Date Programmed	–	Varies	The scan tool displays the Date Programmed
Diagnostic Data Identifier	–	Varies	The scan tool displays the Diagnostic Data Identifier
Manufacturer Enable Counter	–	Varies	The scan tool displays the Manufacturer Enable Counter
Module Diagnostic Address	–	Varies	The scan tool displays the Software Module 1 Identifier
Manufacturer’s Traceability Number	–	Varies	The scan tool displays the Manufacturer’s Traceability Number
Application Software Part Number 1	–	Varies	The scan tool displays the Application Software Part Number 1

Parameter	System State	Expected Value	Definition
Calibration Part Number 1	–	Varies	The scan tool displays the Calibration Part Number 1
End Model Part Number	–	Varies	The scan tool displays the End Model Part Number
Base Model Part Number	–	Varies	The scan tool displays the Base Model Part Number
Application Software Part Number 1 Alpha Code	–	Varies	The scan tool displays the Application Software Part Number 1 Alpha Code
Calibration Part Number 1 Alpha Code	–	Varies	The scan tool displays the Calibration Part Number 1 Alpha Code
End Model Part Number Alpha Code	–	Varies	The scan tool displays the End Model Part Number Alpha Code
Base Model Part Number Alpha Code	–	Varies	The scan tool displays the Base Model Part Number Alpha Code

B218R Side Obstacle Detection Control Module - Right: Scan Tool Information

Identification Information

Parameter	System State	Expected Value	Definition
Operating Conditions: Ignition ON			
Vehicle Identification Number (VIN)	–	Varies	The scan tool displays the vehicle VIN number
Last Dealer Code or Scan Tool Serial Number	–	Varies	The scan tool displays the Last Dealer Code or Scan Tool Serial Number
Date Programmed	–	Varies	The scan tool displays the Date Programmed
Diagnostic Data Identifier	–	Varies	The scan tool displays the Diagnostic Data Identifier
Manufacturer Enable Counter	–	Varies	The scan tool displays the Manufacturer Enable Counter
Module Diagnostic Address	–	Varies	The scan tool displays the Software Module 1 Identifier
Manufacturer’s Traceability Number	–	Varies	The scan tool displays the Manufacturer’s Traceability Number
Application Software Part Number 1	–	Varies	The scan tool displays the Application Software Part Number 1
Calibration Part Number 1	–	Varies	The scan tool displays the Calibration Part Number 1
End Model Part Number	–	Varies	The scan tool displays the End Model Part Number
Base Model Part Number	–	Varies	The scan tool displays the Base Model Part Number
Application Software Part Number 1 Alpha Code	–	Varies	The scan tool displays the Application Software Part Number 1 Alpha Code
Calibration Part Number 1 Alpha Code	–	Varies	The scan tool displays the Calibration Part Number 1 Alpha Code
End Model Part Number Alpha Code	–	Varies	The scan tool displays the End Model Part Number Alpha Code
Base Model Part Number Alpha Code	–	Varies	The scan tool displays the Base Model Part Number Alpha Code

B233B Forward Range Radar Sensor - Long Range: Scan Tool Information

Identification Information

Parameter	System State	Expected Value	Definition
Operating Conditions: Ignition ON			
Last Dealer Code or Scan Tool Serial Number	–	Varies	The scan tool displays the Last Dealer Code or Scan Tool Serial Number
Application Software Part Number 1	–	Varies	The scan tool displays the Application Software Part Number 1
Application Software Part Number 1 Alpha Code	–	Varies	The scan tool displays the Application Software Part Number 1 Alpha Code
Calibration Part Number 1 Alpha Code	–	Varies	The scan tool displays the Calibration Part Number 1 Alpha Code
Manufacturer's Traceability Number	–	Varies	The scan tool displays the Manufacturer's Traceability Number
Diagnostic Data Identifier	–	Varies	The scan tool displays the Diagnostic Data Identifier
Module Diagnostic Address	–	Varies	The scan tool displays the Software Module 1 Identifier
Base Model Part Number	–	Varies	The scan tool displays the Base Model Part Number
Vehicle Identification Number (VIN)	–	Varies	The scan tool displays the vehicle VIN number
Manufacturer Enable Counter	–	Varies	The scan tool displays the Manufacturer Enable Counter
Calibration Part Number 1	–	Varies	The scan tool displays the Calibration Part Number 1
End Model Part Number	–	Varies	The scan tool displays the End Model Part Number
Base Model Part Number Alpha Code	–	Varies	The scan tool displays the Base Model Part Number Alpha Code
Date Programmed	–	Varies	The scan tool displays the Date Programmed
End Model Part Number Alpha Code	–	Varies	The scan tool displays the End Model Part Number Alpha Code

Data Display

Parameter	System State	Expected Value	Definition
Operating Conditions: Ignition ON			
Learn Status	–	Complete	The scan tool displays the current learn status of the B233B Forward Range Radar Sensor – Long Range

Configuration/Reset Functions

Parameter	Definition
Operating Conditions: Ignition ON	
Long Range Radar Sensor Module Learn	The scan tool will being B233B Forward Range Radar Sensor – Long Range learn

B233LF Short Range Radar Sensor - Left Front: Scan Tool Information

Identification Information

Parameter	System State	Expected Value	Definition
Operating Conditions: Ignition ON			
Last Dealer Code or Scan Tool Serial Number	–	Varies	The scan tool displays the Last Dealer Code or Scan Tool Serial Number
Application Software Part Number 1	–	Varies	The scan tool displays the Application Software Part Number 1
Application Software Part Number 1 Alpha Code	–	Varies	The scan tool displays the Application Software Part Number 1 Alpha Code
Calibration Part Number 1 Alpha Code	–	Varies	The scan tool displays the Calibration Part Number 1 Alpha Code
Manufacturer's Traceability Number	–	Varies	The scan tool displays the Manufacturer's Traceability Number
Module Diagnostic Address	–	Varies	The scan tool displays the Software Module 1 Identifier
Base Model Part Number	–	Varies	The scan tool displays the Base Model Part Number
Manufacturer Enable Counter	–	Varies	The scan tool displays the Manufacturer Enable Counter
Calibration Part Number 1	–	Varies	The scan tool displays the Calibration Part Number 1
End Model Part Number	–	Varies	The scan tool displays the End Model Part Number
Base Model Part Number Alpha Code	–	Varies	The scan tool displays the Base Model Part Number Alpha Code
Date Programmed	–	Varies	The scan tool displays the Date Programmed
End Model Part Number Alpha Code	–	Varies	The scan tool displays the End Model Part Number Alpha Code
Diagnostic Data Identifier	–	Varies	The scan tool displays the Diagnostic Data Identifier
Vehicle Identification Number (VIN)	–	Varies	The scan tool displays the vehicle VIN number

B233LR Short Range Radar Sensor - Left Rear: Scan Tool Information

Identification Information

Parameter	System State	Expected Value	Definition
Operating Conditions: Ignition ON			
Last Dealer Code or Scan Tool Serial Number	–	Varies	The scan tool displays the Last Dealer Code or Scan Tool Serial Number
Application Software Part Number 1	–	Varies	The scan tool displays the Application Software Part Number 1
Application Software Part Number 1 Alpha Code	–	Varies	The scan tool displays the Application Software Part Number 1 Alpha Code
Calibration Part Number 1 Alpha Code	–	Varies	The scan tool displays the Calibration Part Number 1 Alpha Code
Manufacturer's Traceability Number	–	Varies	The scan tool displays the Manufacturer's Traceability Number
Module Diagnostic Address	–	Varies	The scan tool displays the Software Module 1 Identifier
Base Model Part Number	–	Varies	The scan tool displays the Base Model Part Number
Manufacturer Enable Counter	–	Varies	The scan tool displays the Manufacturer Enable Counter

Parameter	System State	Expected Value	Definition
Calibration Part Number 1	–	Varies	The scan tool displays the Calibration Part Number 1
End Model Part Number	–	Varies	The scan tool displays the End Model Part Number
Base Model Part Number Alpha Code	–	Varies	The scan tool displays the Base Model Part Number Alpha Code
Date Programmed	–	Varies	The scan tool displays the Date Programmed
End Model Part Number Alpha Code	–	Varies	The scan tool displays the End Model Part Number Alpha Code
Diagnostic Data Identifier	–	Varies	The scan tool displays the Diagnostic Data Identifier
Vehicle Identification Number (VIN)	–	Varies	The scan tool displays the vehicle VIN number

B233RF Short Range Radar Sensor - Right Front: Scan Tool Information

Identification Information

Parameter	System State	Expected Value	Definition
Operating Conditions: Ignition ON			
Last Dealer Code or Scan Tool Serial Number	–	Varies	The scan tool displays the Last Dealer Code or Scan Tool Serial Number
Application Software Part Number 1	–	Varies	The scan tool displays the Application Software Part Number 1
Application Software Part Number 1 Alpha Code	–	Varies	The scan tool displays the Application Software Part Number 1 Alpha Code
Calibration Part Number 1 Alpha Code	–	Varies	The scan tool displays the Calibration Part Number 1 Alpha Code
Manufacturer’s Traceability Number	–	Varies	The scan tool displays the Manufacturer’s Traceability Number
Module Diagnostic Address	–	Varies	The scan tool displays the Software Module 1 Identifier
Base Model Part Number	–	Varies	The scan tool displays the Base Model Part Number
Manufacturer Enable Counter	–	Varies	The scan tool displays the Manufacturer Enable Counter
Calibration Part Number 1	–	Varies	The scan tool displays the Calibration Part Number 1
End Model Part Number	–	Varies	The scan tool displays the End Model Part Number
Base Model Part Number Alpha Code	–	Varies	The scan tool displays the Base Model Part Number Alpha Code
Date Programmed	–	Varies	The scan tool displays the Date Programmed
End Model Part Number Alpha Code	–	Varies	The scan tool displays the End Model Part Number Alpha Code
Diagnostic Data Identifier	–	Varies	The scan tool displays the Diagnostic Data Identifier
Vehicle Identification Number (VIN)	–	Varies	The scan tool displays the vehicle VIN number

B233RR Short Range Radar Sensor - Right Rear: Scan Tool Information

Identification Information

Parameter	System State	Expected Value	Definition
Operating Conditions: Ignition ON			
Last Dealer Code or Scan Tool Serial Number	–	Varies	The scan tool displays the Last Dealer Code or Scan Tool Serial Number
Application Software Part Number 1	–	Varies	The scan tool displays the Application Software Part Number 1
Application Software Part Number 1 Alpha Code	–	Varies	The scan tool displays the Application Software Part Number 1 Alpha Code
Calibration Part Number 1 Alpha Code	–	Varies	The scan tool displays the Calibration Part Number 1 Alpha Code
Manufacturer's Traceability Number	–	Varies	The scan tool displays the Manufacturer's Traceability Number
Module Diagnostic Address	–	Varies	The scan tool displays the Software Module 1 Identifier
Base Model Part Number	–	Varies	The scan tool displays the Base Model Part Number
Manufacturer Enable Counter	–	Varies	The scan tool displays the Manufacturer Enable Counter
Calibration Part Number 1	–	Varies	The scan tool displays the Calibration Part Number 1
End Model Part Number	–	Varies	The scan tool displays the End Model Part Number
Base Model Part Number Alpha Code	–	Varies	The scan tool displays the Base Model Part Number Alpha Code
Date Programmed	–	Varies	The scan tool displays the Date Programmed
End Model Part Number Alpha Code	–	Varies	The scan tool displays the End Model Part Number Alpha Code
Diagnostic Data Identifier	–	Varies	The scan tool displays the Diagnostic Data Identifier
Vehicle Identification Number (VIN)	–	Varies	The scan tool displays the vehicle VIN number

B233SL Short Range Radar Rear Side Sensor - Left: Scan Tool Information

Identification Information

Parameter	System State	Expected Value	Definition
Operating Conditions: Ignition ON			
Last Dealer Code or Scan Tool Serial Number	–	Varies	The scan tool displays the Last Dealer Code or Scan Tool Serial Number
Application Software Part Number 1	–	Varies	The scan tool displays the Application Software Part Number 1
Application Software Part Number 1 Alpha Code	–	Varies	The scan tool displays the Application Software Part Number 1 Alpha Code
Calibration Part Number 1 Alpha Code	–	Varies	The scan tool displays the Calibration Part Number 1 Alpha Code
Manufacturer's Traceability Number	–	Varies	The scan tool displays the Manufacturer's Traceability Number
Module Diagnostic Address	–	Varies	The scan tool displays the Software Module 1 Identifier
Base Model Part Number	–	Varies	The scan tool displays the Base Model Part Number
Manufacturer Enable Counter	–	Varies	The scan tool displays the Manufacturer Enable Counter
Calibration Part Number 1	–	Varies	The scan tool displays the Calibration Part Number 1

Parameter	System State	Expected Value	Definition
End Model Part Number	–	Varies	The scan tool displays the End Model Part Number
Base Model Part Number Alpha Code	–	Varies	The scan tool displays the Base Model Part Number Alpha Code
Date Programmed	–	Varies	The scan tool displays the Date Programmed
End Model Part Number Alpha Code	–	Varies	The scan tool displays the End Model Part Number Alpha Code
Diagnostic Data Identifier	–	Varies	The scan tool displays the Diagnostic Data Identifier
Vehicle Identification Number (VIN)	–	Varies	The scan tool displays the vehicle VIN number

B233SR Short Range Radar Rear Side Sensor - Right: Scan Tool Information

Identification Information

Parameter	System State	Expected Value	Definition
Operating Conditions: Ignition ON			
Last Dealer Code or Scan Tool Serial Number	–	Varies	The scan tool displays the Last Dealer Code or Scan Tool Serial Number
Application Software Part Number 1	–	Varies	The scan tool displays the Application Software Part Number 1
Application Software Part Number 1 Alpha Code	–	Varies	The scan tool displays the Application Software Part Number 1 Alpha Code
Calibration Part Number 1 Alpha Code	–	Varies	The scan tool displays the Calibration Part Number 1 Alpha Code
Manufacturer’s Traceability Number	–	Varies	The scan tool displays the Manufacturer’s Traceability Number
Module Diagnostic Address	–	Varies	The scan tool displays the Software Module 1 Identifier
Base Model Part Number	–	Varies	The scan tool displays the Base Model Part Number
Manufacturer Enable Counter	–	Varies	The scan tool displays the Manufacturer Enable Counter
Calibration Part Number 1	–	Varies	The scan tool displays the Calibration Part Number 1
End Model Part Number	–	Varies	The scan tool displays the End Model Part Number
Base Model Part Number Alpha Code	–	Varies	The scan tool displays the Base Model Part Number Alpha Code
Date Programmed	–	Varies	The scan tool displays the Date Programmed
End Model Part Number Alpha Code	–	Varies	The scan tool displays the End Model Part Number Alpha Code
Diagnostic Data Identifier	–	Varies	The scan tool displays the Diagnostic Data Identifier
Vehicle Identification Number (VIN)	–	Varies	The scan tool displays the vehicle VIN number

K4 Assist Step Control Module: Scan Tool Information

Scan Tool Data Parameters

Parameter	Expected Value	Description
Operating Conditions: Ignition ON		
Manual Deploy Status	Normal	Scan tool displays Unknown, Off, Extend to Passenger Position - Left and Right, or Extend to Cargo Position - Left and Right.

Parameter	Expected Value	Description
Left Assist Step Motor Current	0 A	Scan tool displays the current amperage of the left assist step motor.
Left Assist Step Position	Retracted Position - Left	Scan tool displays Retracted Position - Left, Extend to Passenger Position - Left, Extend to Cargo Position - Left, or Extend to Service Position - Left.
Left Assist Step Position	Count Value	Scan tool displays the current left step position count.
Left Assist Step System Status	Retracted Position - Left	Scan tool displays Retracted Position - Left, Extend to Passenger Position - Left, Extend to Cargo Position - Left, or Extend to Service Position - Left.
Left Assist Step Learn Status	Yes	Scan tool displays Learned if the left step learn has been completed.
Left Front Door Ajar Switch	Inactive	Scan tool displays Inactive if the door is shut, and Active if the door is open.
Left Rear Door Ajar Switch	Inactive	Scan tool displays Inactive if the door is shut, and Active if the door is open.
Right Assist Step Motor Current	0 A	Scan tool displays the current amperage of the right assist step motor.
Right Assist Step Position	Retracted Position - Right	Scan tool displays Retracted Position - Right, Extend to Passenger Position - Right, Extend to Cargo Position - Right, or Extend to Service Position - Right.
Right Assist Step Position	Count Value	Scan tool displays the current right step position count.
Right Assist Step System Status	Retracted Position - Right	Scan tool displays Retracted Position - Right, Extend to Passenger Position - Right, Extend to Cargo Position - Right, or Extend to Service Position - Right.
Right Assist Step Learn Status	Yes	Scan tool displays Learned if the right step learn has been completed.
Right Front Door Ajar Switch	Inactive	Scan tool displays Inactive if the door is shut, and Active if the door is open.
Right Rear Door Ajar Switch	Inactive	Scan tool displays Inactive if the door is shut, and Active if the door is open.
Headlamp Switch Signal	Off	Scan tool displays Unknown, Off, Auto, Park Lamps, Headlamp.
Exterior Lighting	Inactive	Scan tool displays Inactive or Active
System Power Mode	Varies	Scan tool displays Off, Accessory, Run, Start Request, or Propulsion Active.
Battery Voltage	Varies	Current voltage of battery.

Scan Tool Output Controls

Output Control	Description
Assist Step Courtesy Lamp	Turns the assist step courtesy lamp ON and OFF.
Extend to Passenger Position - Right	Commands the right assist step to the deployed position.
Extend to Service Position - Right	Commands the right assist step to the fully extended service position.
Retracted Position - Right	Commands the right assist step to the retracted position.
Extend to Passenger Position - Left	Commands the Left assist step to the deployed position.
Extend to Service Position - Left	Commands the Left assist step to the fully extended service position.
Retracted Position - Left	Commands the Left assist step to the retracted position.

K5 Automatic Level Control Module: Scan Tool Information

The K5 Automatic Level Control Module scan tool data parameters list contains all automatic level control related parameters that are available on the scan tool. The list is arranged in alphabetical order. A given parameter may appear in any one of the data lists.

Automatic Level Control Module Scan Tool Data Parameters

Parameter	System State	Expected Value	Description (Range)
Operating Conditions: Ignition ON			
Air Suspension Reservoir Pressure	Normal Ride Height	18 bar	The scan tool displays the Air Suspension Reservoir Pressure (2–20 bar).
Left Front Air Spring Pressure	Normal Ride Height	6.6–8.6 bar	The scan tool displays the pressure inside the Left Front Air Spring (2–11 bar).
Left Front Position Offset From Trim	Normal Ride Height	0mm	The scan tool displays amount offset from Normal Ride Height of the left front position sensor (-25–50mm).
Left Front Suspension Position Sensor Trim Height	Normal Ride Height	53%	The scan tool displays the Left Front Position Sensor Duty Cycle (0–100%)
Left Rear Air Spring Pressure	Normal Ride Height	5.2–6 bar	The scan tool displays the pressure inside the Left Rear Air Spring (2–11 bar).
Left Rear Position Offset From Trim	Normal Ride Height	0mm	The scan tool displays amount offset from Normal Ride Height of the left rear position sensor (-25–50mm).
Left Rear Suspension Position Sensor Trim Height	Normal Ride Height	51%	The scan tool displays the Left Rear Position Sensor Duty Cycle (0–100%)
Right Front Air Spring Pressure	Normal Ride Height	6.6–8.6 bar	The scan tool displays the pressure inside the Right Front Air Spring (2–11 bar).
Right Front Position Offset From Trim	Normal Ride Height	0mm	The scan tool displays amount offset from Normal Ride Height of the right front position sensor (-25–50mm).
Right Front Suspension Position Sensor Trim Height	Normal Ride Height	53%	The scan tool displays the Right Front Position Sensor Duty Cycle (0–100%)
Right Rear Air Spring Pressure	Normal Ride Height	5.2–6 bar	The scan tool displays the pressure inside the Right Rear Air Spring (2–11 bar).
Right Rear Position Offset From Trim	Normal Ride Height	0mm	The scan tool displays amount offset from Normal Ride Height of the right rear position sensor (-25–50mm).
Right Rear Suspension Position Sensor Trim Height	Normal Ride Height	51%	The scan tool displays the Right Rear Position Sensor Duty Cycle (0–100%)
Vehicle Level Control Compressor Temperature	—	Varies	The scan tool displays the current temperature of the Automatic Level Control Compressor (-40–125°C).

Automatic Level Control Module Scan Tool Output Controls

Output Control	Description
Air Spring Deflation	Short Term Deflate — Opens the selected valve for up to a 2 second to allow visible movement. This verifies that the spring can properly deflate. Complete Deflate — When vehicle is raised off the ground or an individual corner is jacked/raised up, opens the valve until selected air spring is approximately 2 Bar. Used to deflate the selected air spring for replacement or testing.
Deflate Air Suspension Reservoir	Opens selected valve until pressure is low enough for Reservoir Removal
Equalize All Air Spring Pressures	Equalizes spring pressures on the selected axle. Function runs for up to 12 seconds. Used to equalize pressures across axle after component replacement.
Short Term Inflate	Opens the selected valve for up to 2 seconds, allowing selected corner to inflate and see that air moves into air spring. Used for testing air spring inflation and inflating air spring after repair or replacement.
Pneumatic Connection Pressure Test	Tests the pneumatic connection from the Pneumatic Control Unit to the Air Compressor. Used any time the airline is opened or replaced to verify there are no leaks.
Test Compressor Pneumatic Operation	Commands the Air Suspension Leveling Compressor to On for a up to 20 seconds. Used to verify the compressor motor/pump/exhaust valve mechanical, electrical, and pneumatic operation.

Automatic Level Control Module Scan Tool Configuration/Reset Functions

Configuration/Reset Function	Description
Air Spring Deflation	Opens the selected valve for up to a 2 second to allow visible movement. Used to deflate the selected air spring for replacement or testing.
Level Vehicle to Target Height	Commands the vehicle to the Normal Ride Height. Used to return vehicle to Normal Ride Height after performing tests or repairs.
Trim Height Settings	Allows vehicle trim height to be set. Used after ECU reflash or component replacement.

K9 Body Control Module: Scan Tool Information

Body Control Module — 12V Battery Data — Scan Tool Data Parameters

Parameter	System State	Expected Value	Description
Operating Conditions: Ignition ON/Vehicle in Service Mode, Vehicle in Park, All Doors Closed			
Battery Capacity	—	Varies	The scan tool displays Ah (Amp hr). Ah/20 is the amount of current a battery can supply for 20hrs until the voltage drops to 10.5V.
Battery Current	—	Varies	The scan tool displays Amps. This is the current flowing through the Battery Sensor Module.
Battery Current During Autostop	—	Varies	The scan tool displays Amps. This is the amperage flowing out of battery to maintain vehicle systems during an autostop.
Battery Sensor Internal Temperature Sensor	—	Varies	The scan tool displays temperature in Celsius.
Battery Sensor Module - Battery Nominal Resistance	—	Varies	The scan tool displays mOhm. This is the internal impedance of the 12V battery as measured by the Battery Sensor Module.
Battery Sensor Module - Battery Voltage	—	Varies	The scan tool displays Volts. This is the actual 12V battery voltage as measured by the Battery Sensor Module.
Battery Sensor Module - Data Received	—	Yes	The scan tool displays Yes or No. This value indicates that information has been received by the Body Control Module from the Battery Sensor Module.
Battery Sensor Module - Ignition Off Minimum Battery State of Charge	—	Varies	The scan tool displays percentage (%).
Battery Sensor Module - Ignition Off Minimum Battery Voltage	—	Varies	The scan tool displays battery voltage in volts (V). This is the lowest 12V battery voltage recorded during key off.
Battery Sensor Module - Maximum Cranking Current	—	Varies	The scan tool displays maximum cranking current in amperes (A). This is the actual peak value of amps measured by the Battery Sensor Module on the previous engine crank event.

Parameter	System State	Expected Value	Description
Battery Sensor Module - Minimum Cranking Voltage	—	Varies	The scan tool displays minimum cranking voltage in volts (V). This is the actual lowest voltage measured by the Battery Sensor Module on the previous engine crank event.
Battery Sensor Module - Open Circuit Voltage	—	Varies	The scan tool displays Volts.
Battery Sensor Module - Predicted Minimum Crank Voltage	—	Varies	The scan tool displays Volts. This is a value calculated by the Battery Sensor Module that predicts the minimum voltage during the next engine crank event.
Battery Sensor Module - State of Charge	—	Varies	The scan tool displays percentage (%). This is a measurement of the charge level compared to a fully charged 12V battery as measured by the Battery Sensor Module.
Battery Sensor Module State of Charge Error	—	Varies	The scan tool displays percentage (%).
Battery Sensor Module - State of Charge Status OK	—	—	—
Battery Sensor Module - State of Charge Variance	—	Varies	The scan tool displays percentage (%).
Battery Sulfation Protection Mode	—	—	—
Battery Type	—	Default	The scan tool displays Default, Flooded Battery, AGM Battery, Enhanced Flooded Battery, or Lithium Battery.
Battery Voltage Too Low	—	No	The scan tool displays Yes or No.
Charge Recovery Mode Active - Battery Saver Mode	—	0	The scan tool displays a numeric value. This indicates the level that battery saver mode is operating at. This provides an indication of what actions are being taken.
Charge Recovery Mode Active - Battery Disconnected	—	—	—
Charge Recovery Mode Active - Charge Efficiency Off	—	—	—
Charge Recovery Mode Active - Service Tool Request	—	—	—
Charge Recovery Mode Active - State of Charge Loss	—	—	—
Charge Recovery Mode Active - Vehicle Inactive Too Long	—	—	—
Low-Voltage Battery Previous State of Charge	—	Varies	The scan tool displays percentage (%).
Low-Voltage Battery State of Charge	—	Varies	The scan tool displays percentage (%).
Low-Voltage Battery Temperature	—	Varies	The scan tool displays temperature in Celsius (°C).

Parameter	System State	Expected Value	Description
Net Battery Amp Hours	—	Varies	The scan tool displays Ah. This is the sum of Amp per hour as measured through the Battery Sensor Module.
Net Battery Amp Hours Charged	—	Varies	The scan tool displays Ah.
Net Battery Amp Hours Discharged	—	Varies	The scan tool displays Ah.
Parasitic Current Greater than 0mA Counter	—	Varies	The scan tool displays min. This is a counter that tracks if the current during ignition off is within a particular range.
Parasitic Current -5.0A to -10.0A Counter	—	Varies	The scan tool displays min. This is a counter that tracks if the current during ignition off is within a particular range.
Parasitic Current 0mA to -10mA Counter	—	Varies	The scan tool displays min. This is a counter that tracks if the current during ignition off is within a particular range.
Parasitic Current -1.25A to -2.5A Counter	—	Varies	The scan tool displays min. This is a counter that tracks if the current during ignition off is within a particular range.
Parasitic Current -10mA to -20mA Counter	—	Varies	The scan tool displays min. This is a counter that tracks if the current during ignition off is within a particular range.
Parasitic Current -40mA to -80mA Counter	—	Varies	The scan tool displays min. This is a counter that tracks if the current during ignition off is within a particular range.
Parasitic Current -20mA to -40mA Counter	—	Varies	The scan tool displays min. This is a counter that tracks if the current during ignition off is within a particular range.
Parasitic Current -80mA to -160mA Counter	—	Varies	The scan tool displays min. This is a counter that tracks if the current during ignition off is within a particular range.
Parasitic Current -10.0A or less Counter	—	Varies	The scan tool displays min. This is a counter that tracks if the current during ignition off is within a particular range.
Parasitic Current -2.5A to -5.0A Counter	—	Varies	The scan tool displays min. This is a counter that tracks if the current during ignition off is within a particular range.
Parasitic Current -640mA to -1.25A Counter	—	Varies	The scan tool displays min. This is a counter that tracks if the current during ignition off is within a particular range.
Parasitic Current -160mA to -320mA Counter	—	Varies	The scan tool displays min. This is a counter that tracks if the current during ignition off is within a particular range.
Parasitic Current -320mA to -640mA Counter	—	Varies	The scan tool displays min. This is a counter that tracks if the current during ignition off is within a particular range.

Parameter	System State	Expected Value	Description
Stop/Start Mode	—	—	—
Voltage Drop During Autostop	—	Varies	The scan tool displays Volts. This is a measurement of the amount that the battery voltage has dropped during an autostop.

Body Control Module — Brake Pedal Position Data — Scan Tool Data Parameters

Parameter	System State	Expected Value	Description
Operating Conditions: Ignition ON/Vehicle in Service Mode, Vehicle in Park, All Doors Closed			
Brake Pedal Position Sensor Fully Released Learn Status	—	Yes	The scan tool displays Yes or No.
Brake Pedal Initial Travel Position Achieved	—	No	The scan tool displays Yes or No.
Brake Pedal Position Switch Circuit Signal	—	—	—
Extended Travel Brake Pedal Position Signal	—	—	—
Extended Travel Brake Pedal Position Switch	—	Inactive	The scan tool displays Active or Inactive.
Torque Converter Clutch/ Cruise Control Brake Pedal Position Switch	—	Inactive	The scan tool displays Active or Inactive.

Body Control Module — Chassis Control Data — Scan Tool Data Parameters

Parameter	System State	Expected Value	Description
Operating Conditions: Ignition ON/Vehicle in Service Mode, Vehicle in Park, All Doors Closed			
Drive Mode Select Switch 1	—	Inactive	The scan tool displays Inactive, Switch 1, Switch 2, Switch 3, Switch 4, Switch 5, Switch 6, Switch 7, Switch 8, Open/Short to Battery, Short to Ground, or Invalid. This is the primary bank of switches which the vehicle operator interfaces with for different selectable vehicle operating modes such as Sport Mode, Fuel Economy Mode...
Drive Mode Select Digital Switch 1	—	Inactive	The scan tool displays Active or Inactive. This is a discrete switch the vehicle operator interfaces with to select vehicle operating modes such as Sport Mode, Fuel Economy Mode...
Driver Shift Control Mode Switch	—	Inactive	The scan tool displays Upshift, Downshift, Inactive, or Invalid.

Parameter	System State	Expected Value	Description
Hill Descent Control Switch	—	Inactive	The scan tool displays Active or Inactive.
Traction Control Switch	—	Inactive	The scan tool displays Active or Inactive. This indicates the state of the input that enables or disables the traction control system, which is a system designed to prevent loss of traction (and therefore the control of the vehicle) when excessive throttle or steering is applied by the driver.

Body Control Module — Content Theft Deterrent Alarm Trigger — Scan Tool Data Parameters

Parameter	System State	Expected Value	Description
Operating Conditions: Ignition ON/Vehicle in Service Mode, Vehicle in Park, All Doors Closed			
Content Theft Deterrent Alarm Status	—	Has Not Alarmed - No Alarm	The scan tool displays Has Not Alarmed - No Alarm, Alarming - Alarm, or Has Alarmed - Alarm Active. This indicates if the vehicle content theft deterrent system is in alarm mode or not.
Content Theft Deterrent Indicator	—	Off	The scan tool displays Off, On, Flashing Slow, or Flashing Fast. This is the illuminating lamp on the instrument cluster that indicates if the vehicle security system is active or not.
Current Content Theft Deterrent Trigger	—	No Information/None	This indicates what factor led to the activation of the content theft deterrent system.
Content Theft Deterrent Trigger History 1	—	No Information/None	This indicates the factor that led to the first history reason for activation of the content theft deterrent system.
Content Theft Deterrent Trigger History 2	—	No Information/None	This indicates the factor that led to the second history reason for activation of the content theft deterrent system.
Content Theft Deterrent Trigger History 3	—	No Information/None	This indicates the factor that led to the third history reason for activation of the content theft deterrent system.
Glass Breakage	—	Not Detected	The scan tool displays Not Detected or Detected. This parameter indicates the damage to glass as a result to breaking. Glass divides into pieces as a result of a sudden or violent action.
Horn Relay Command	—	Inactive	The scan tool displays Active or Inactive. This refers to a request to initiate the sound for a vehicle's loud warning signal. This is used to display whether the Body Control Module is commanding the horn relay to be on or off.

Parameter	System State	Expected Value	Description
Liftglass	—	Inactive	The scan tool displays Active or Inactive. The liftglass ajar warning light will be illuminated when the liftglass is not properly closed. This parameter indicates if the liftglass active or inactive.
Power Sounder Content Theft Deterrent Alarm Module Command	—	No Alarm	The scan tool displays No Alarm or Alarm Active. The power sounder is part of the vehicle's theft deterrent system. This parameter shows if the power sounder is commanded active (monitoring for vehicle theft attempt) or not.
Power Sounder Content Theft Deterrent Alarm Module Internal Battery State of Charge	—	OK	The scan tool displays OK or Not OK. This parameter describes the internal battery state of charge in the Power Sounder Content Theft Deterrent Alarm Module.
Rear Closure Unlock Command	—	Inactive	The scan tool displays Active or Inactive. This parameter for the rear closure unlock relay or unlock actuator will display On/Off upon the door being commanded to unlock. Commanded ON is when the Body Control Module energizes the rear closure unlock relay/actuator to unlock the door.
Security Indicator Command	—	Inactive	The scan tool displays Active or Inactive. Security Indicator Command refers to the command that is sent out by the module to turn the lamp (symbolic icon) on which acts as an indicator for the active state of the security system.
Security Siren Command	—	Not Requested	The scan tool displays Not Requested or Disarmed. This is the serial data command to activate the output circuit for the alarm siren. Alarm siren is like a horn, but will activate during a theft event to warn away intruders.
Ultrasonic Intrusion Sensor	—	Disarmed	The scan tool displays Armed or Disarmed. The rear integration module supplies a low side drive output interface to the Intrusion and Inclination Sensor.

Parameter	System State	Expected Value	Description
Ultrasonic Intrusion Sensor Disable Switch Signal	—	Inactive	The scan tool displays Active or Inactive. This is the switch which enables/disables the Ultrasonic Intrusion Sensor of the vehicle.
Ultrasonic Intrusion Sensor Malfunction	—	No	The scan tool displays Yes or No. This sensor detects an unauthorized opening of the vehicle's cabin by sending and receiving ultrasonic waves. This indicates the state of the sensor to fail to operate normally.

Body Control Module — Electric Power Management Data — Scan Tool Data Parameters

Parameter	System State	Expected Value	Description
Operating Conditions: Ignition ON/Vehicle in Service Mode, Vehicle in Park, All Doors Closed			
Battery Current	—	Varies	The scan tool displays Amps. This is the current flowing through the Battery Sensor Module.
Battery Saver Mode	—	Off	The scan tool displays Off, Assembly Plant Mode, Transport Mode, or Storage Mode.
Battery Saver Mode Ignition Off - Battery Voltage less than 11.6V	—	False	The scan tool displays True or False. This will set with key off if battery voltage drops below 11.6V
Battery Saver Mode Ignition Off - Battery Voltage less than 12.0V	—	False	The scan tool displays True or False. This will set with key off if battery voltage drops below 12.0V.
Battery Saver Mode Ignition Off - Parasitic Current 100mA or greater	—	False	The scan tool displays True or False. This will set with key off if parasitic current is greater than 100mA.
Battery Saver Mode Ignition Off - Parasitic Current 1A or greater	—	False	The scan tool displays True or False. This will set with key off if parasitic current is greater than 1A.
Fuel Economy Mode	—	Active	The scan tool displays Active or Inactive.
Generator Regulator Setpoint	—	—	The scan tool displays Volts.
Load Shed Reason	—	Varies	The scan tool displays Amp Hour Demand Too High, Regulated Voltage Control, Hybrid/EV Battery State of Charge Low, Low Voltage, Service Tool Request, Battery Save Mode, or None. This provides indication of what is causing vehicle loads to be turned off in an attempt to prolong 12V battery life.
Load Shed Requested	—	—	—
Low-Voltage Battery Previous State of Charge	—	Varies	The scan tool displays percentage (%).
Low-Voltage Battery State of Charge	—	Varies	The scan tool displays percentage (%).

Parameter	System State	Expected Value	Description
Low-Voltage Battery Temperature	—	Varies	The scan tool displays temperature in Celsius (°C).
Requested Idle Boost Level	—	Varies	The scan tool displays Assembly Plant Mode, Low Temperature, Ah, HVAC Request, Low Voltage, Remote Start, Service Tool Request, or None.
Regulated Voltage Control Mode	—	Varies	The scan tool displays Remote Start, Fuel Economy Mode, Normal, Charge Recovery Mode, Assembly Plant Mode, or Ignition and Start Switch Start.
Stop/Start Mode	—	—	—

Body Control Module — Front Exterior Lighting Data — Scan Tool Data Parameters

Parameter	System State	Expected Value	Description
Operating Conditions: Ignition ON/Vehicle in Service Mode, Vehicle in Park, All Doors Closed			
Headlamp Leveling Function	—	Inactive	The scan tool displays Active or Inactive.
Headlamp Leveling Sensor Learn	—	Learn Not Enabled	The scan tool displays Learn Not Enabled, Learning, Learn Successful, or Learn Failed. This parameter indicates the headlamp learns suspension trim position.
Left Headlamp Vertical Motor Command	—	Inactive	This scan tool displays Active or Inactive.
Right Headlamp Vertical Motor Command	—	Inactive	This scan tool displays Active or Inactive.
Left Auxiliary Daytime Running Lamps	—	Off	The scan tool displays On or Off.
Right Auxiliary Daytime Running Lamps	—	Off	The scan tool displays On or Off.
Left Daytime Running Lamps	—	Off	The scan tool displays On or Off.
Right Daytime Running Lamps	—	Off	The scan tool displays On or Off.
Left Front Auxiliary Park Lamp Command	—	Off	The scan tool displays On or Off.
Right Front Auxiliary Park Lamp Command	—	Off	The scan tool displays On or Off.
Left Low Beam Command	—	Inactive	The scan tool displays Active or Inactive.
Right Low Beam Command	—	Inactive	The scan tool displays Active or Inactive.
Left Front Turn Signal Lamp Command	—	Off	The scan tool displays On or Off.
Right Front Turn Signal Lamp Command	—	Off	The scan tool displays On or Off.
Left Front Fog Lamp Command	—	Off	The scan tool displays On or Off.
Right Front Fog Lamp Command	—	Off	The scan tool displays On or Off.

Parameter	System State	Expected Value	Description
Left Park Lamps Command	—	Off	The scan tool displays On or Off.
Right Park Lamps Command	—	Off	The scan tool displays On or Off.
Left Turn Signal Repeater Lamp Command	—	Off	The scan tool displays On or Off.
Right Turn Signal Repeater Lamp Command	—	Off	The scan tool displays On or Off.
Surround View Exterior Courtesy Lamps Command	—	Off	The scan tool displays On or Off.

Body Control Module — Heated Steering Wheel Data — Scan Tool Data Parameters

Parameter	System State	Expected Value	Description
Operating Conditions: Ignition ON/Vehicle in Service Mode, Vehicle in Park, All Doors Closed			
Heated Steering Wheel Indicator	—	Off	The scan tool displays Off, Low, Medium, or High.
Heated Steering Wheel Request Source	—	Switch	The scan tool displays Switch or Remote Vehicle Start.
Heated Steering Wheel Command	—	Off	The scan tool displays Off, Low, Medium, or High.
Heated Steering Wheel Relay	—	Inactive	The scan tool displays Active or Inactive.
Heated Steering Wheel Switch	—	Inactive	The scan tool displays Active or Inactive.
Service Heated Steering Wheel Indicator	—	Inactive	The scan tool displays Active or Inactive.
Heated Steering Wheel Load Reduction	—	Inactive	The scan tool displays Active or Inactive.
Heated Steering Wheel Mode	—	Off	The scan tool displays Off, Remote Vehicle Start, Automatic, or Switch.
Heated Steering Wheel Diagnostic Fault Active - Stuck Switch	—	Inactive	The scan tool displays Active or Inactive.
Heated Steering Wheel	—	Inactive	The scan tool displays Active or Inactive.
Heated Steering Wheel Internal Temperature	—	Off	The scan tool displays Off, Low, Medium, or High.

Body Control Module — HVAC Sensor Data — Scan Tool Data Parameters

Parameter	System State	Expected Value	Description
Operating Conditions: Ignition ON/Vehicle in Service Mode, Vehicle in Park, All Doors Closed			
A/C Evaporator Temperature	—	Varies	The scan tool displays temperature in Celsius (°C) or Fahrenheit (°F). This parameter refers to the sensor used to determine the temperature of the air conditioning system's evaporator. The temperature is displayed with a low level of detail.

Parameter	System State	Expected Value	Description
A/C Evaporator Temperature	—	Varies	The scan tool displays temperature in Celsius (°C) or Fahrenheit (°F). This parameter indicates the temperature (degrees of heat) of the air conditioning system's evaporator.
Ambient Air Temperature	—	Varies	The scan tool displays temperature in Celsius (°C) or Fahrenheit (°F). This parameter indicates the temperature of the air surrounding the vehicle.
Humidity Level at the Windshield	—	Varies	The scan tool displays percentage (%). This is the measurement of the amount of moisture near the windshield that is used by the heating, ventilation, air conditioning (HVAC) system to prevent fogging.
Left Front HVAC Mode Status	—	Not Determined	The scan tool displays Not Determined, Off, Auto, Floor, Floor and Vent, Vent, Vent and Windshield, Windshield, Floor and Windshield, or Floor and Vent and Windshield, or Max Defrost. This parameter describes what state the heating, ventilation, air conditioning system is in for the front left area of the vehicle cabin.
Left Front Passenger Compartment Air Temperature	—	Varies	The scan tool displays the amount of heat in the air in the left front area of the interior cabin of the vehicle in Celsius (°C) or Fahrenheit (°F).
Left Rear HVAC Mode Status	—	Not Determined	The scan tool displays Not Determined, Off, Auto, Floor, Floor and Vent, Vent, Vent and Roof, Roof, Roof and Floor, or Floor and Vent and Roof. This parameter describes what state the heating, ventilation, air conditioning system is in for the rear left area of the vehicle cabin.
Passenger Compartment Air Temperature Sensor Voltage	—	Varies	The scan tool displays the voltage of the passenger compartment air temperature sensor in mV.
Passenger Compartment Humidity	—	Varies	The scan tool displays percentage (%). The parameter indicates the amount of water in the air in the passenger compartment.
Rear Lower Duct Air Temperature Sensor Voltage	—	Varies	The scan tool displays Volts. This is a temperature sensor used to monitor the air temperature from the rear floor ducts.

Parameter	System State	Expected Value	Description
Right Front HVAC Mode Status	—	Not Determined	The scan tool displays Not Determined, Off, Auto, Floor, Floor and Vent, Vent, Vent and Windshield, Windshield, Floor and Windshield, or Floor and Vent and Windshield, or Max Defrost. This parameter describes what state the heating, ventilation, air conditioning system is in for the front right area of the vehicle cabin.
Right Front Passenger Compartment Air Temperature	—	Varies	The scan tool displays the amount of heat in the air in the right front area of the interior cabin of the vehicle in Celsius (°C) or Fahrenheit (°F).
Right Rear HVAC Mode Status	—	Not Determined	The scan tool displays Not Determined, Off, Auto, Floor, Floor and Vent, Vent, Vent and Roof, Roof, Roof and Floor, or Floor and Vent and Roof. This parameter describes what state the heating, ventilation, air conditioning system is in for the rear right area of the vehicle cabin.
Sunload Sensor Voltage	—	Varies	The scan tool displays Volts. This is a sensor that detects how warm the sun is shining.
Windshield Temperature	—	Varies	The scan tool displays temperature in Celsius (°C) or Fahrenheit (°F). This parameter detects the temperature of the front window (windshield).

Body Control Module — HVAC System Data — Scan Tool Data Parameters

Parameter	System State	Expected Value	Description
Operating Conditions: Ignition ON/Vehicle in Service Mode, Vehicle in Park, All Doors Closed			
A/C Compressor Refrigerant Solenoid Valve Command	—	Varies	The scan tool displays percentage (%).

Parameter	System State	Expected Value	Description
A/C Compressor Displacement	—	Ready	The scan tool displays Ready, Ramp up, Running, or Ramp down. A variable displacement air conditioning compressor has the ability to change the amount of refrigerant that is pumped into the system (output) while it is running by way of a pulse width modulated (PWM) solenoid. A PWM solenoid will vary the compressor output by using a DC supply voltage that is switched on and off at a given frequency for a modulated period of time (duty cycle). The duty cycle is the “on” time of the voltage and is expressed as a percentage of the time period. This parameter describes the condition in which a variable displacement air conditioning compressor is increasing displacement, holding steady, or decreasing displacement.
A/C Switch	—	Compressor Off	The scan tool displays Compressor Off, Compressor On, or Compressor In Econ. This parameter is used to indicate the status of the signal being sent to the Engine Control Module to turn the A/C on.
Air Quality Sensor	—	Varies	The scan tool displays percentage (%). This is a sensor that measures the amount of contamination, pollution, dirt, odor in the ambient air.
Air Quality Recirculation Control	—	Inactive	The scan tool displays Active or Inactive. The recirculation door in an air conditioning system has the ability to either allow fresh air into the vehicle or to pass the existing cabin air back through the air conditioning system. The recirculation door will be closed if the Air Quality Sensor detects oxidizing, reducing, or ammonia gasses and reopens the door when these gasses are no longer detected.
Auxiliary Blower Motor Speed Command	—	Varies	This parameter shows the value (counts) being sent to command the rear blower from the Auxiliary Blower switch on the front panel. This describes the rear blower motor for the HVAC system. This is supplemental to the primary blower fan.

Parameter	System State	Expected Value	Description
Auxiliary Coolant Pump	—	Inactive	The scan tool displays Active or Inactive. The Auxiliary Coolant Pump refers to a second engine cooling pump that may be devoted to a different function other than for purposes of engine cooling.
Auxiliary Coolant Pump Dry	—	Inactive	The scan tool displays Active or Inactive. This parameter contains the fault information that is communicated by the Electric Auxiliary Coolant Pump over Local Interconnect Network (LIN) to the engine controller. An electric coolant pump circulates engine coolant. This indicates whether the pump was operated without coolant.
Auxiliary Coolant Pump Internal Status	—	Inactive	The scan tool displays Active or Inactive. This parameter contains the fault information that is communicated by the Electric Auxiliary Coolant Pump over Local Interconnect Network (LIN) to the engine controller. An electric coolant pump circulates engine coolant. This indicates whether the pump indicates an internal error.
Auxiliary Coolant Pump Motor Stalled	—	Inactive	The scan tool displays Active or Inactive. This parameter contains the fault information that is communicated by the Electric Auxiliary Coolant Pump over Local Interconnect Network (LIN) to the engine controller. An electric coolant pump circulates engine coolant. This indicates whether the pump has stopped running.
Auxiliary Heater Enable Signal	—	Inactive	The scan tool displays Active or Inactive.
Blower Motor Feedback Signal	—	Varies	The scan tool displays percentage (%). The Blower Motor passes air through the heater core and circulates air throughout the passenger compartment. The Blower Motor is controlled by a module. This parameter indicates the Blower Motor operation Feedback Signal received by the module.
Blower Motor Speed	—	Varies	This parameter indicates the commanded HVAC Blower Motor Speed, displayed in percent, that the blower is turning. The blower motor is a motor with a cage attached to force the air through ducts such as heater, ventilation and defrost ducts.

Parameter	System State	Expected Value	Description
Blower Motor Speed Command	—	Varies	This parameter indicates the commanded HVAC Blower Motor Speed, displayed in percent, that the blower is turning. The blower motor is a motor with a cage attached to force the air through ducts such as heater, ventilation and defrost ducts.
Blower Motor Speed Feedback Signal	—	Normal Function	The scan tool displays Out of Range Low, Stall, Partial Stall, Voltage Out of Range, Normal Function, Motor Over Temperature, Not Used, Mechanical Malfunction, or Out of Range High. The Blower Motor passes air through the heater core and circulates air throughout the passenger compartment. The Blower Motor is controlled by a module. This parameter indicates the Blower Motor operation Feedback Signal received by the module.
Blower Motor Speed Request	—	—	This parameter shows the current state of the switch that turns on the front blower (device that produces a current of air).
Calculated A/C Evaporator Air Temperature	—	Varies	The scan tool displays temperature in Celsius (°C). This parameter indicates the calculated temperature (degrees of heat) of the air that is flowing through the evaporator. The temperature is calculated by the HVAC controller using parameters such as outside air temperature, evaporator temperature and compressor status. An evaporator is a device in a process used to turn the liquid form of a chemical substance into its gaseous-form/vapor.
Coolant Heater Control Module Inlet Coolant Temperature	—	Varies	The scan tool displays this parameter Identifier as a value between -40°C and 150°C approximately to reflect Inlet Coolant Temperature into Coolant Heater Control Module, reported by Coolant Heater Control Module.
Coolant Heater Control Module LIN Bus	—	True	The scan tool displays this parameter identifier as False or True. This parameter identifier is indicative of a Signal State of Coolant Heater Operation Enable from Electronic Climate Control to Coolant Heater Control Module on Local Interconnect Network Bus that allows Coolant Heater to Start Diagnostics whether or not Heating is commanded.

Parameter	System State	Expected Value	Description
Coolant Heater Control Module Status	—	Normal Function	The scan tool displays Normal Function, Temporarily Limited, Recoverable Malfunction, or Non-Recoverable Malfunction. This parameter is used to determine whether the Coolant Heater Control Module is operating normally (Normal Operation) or if there is a problem with a) the Coolant Heater Control Module (scan tool displays only Limited Operation) or b) there is a blockage or restriction in coolant flow (scan tool switches between Normal Running and Limited Operation).
Coolant Heater Control Module Temperature	—	Varies	The scan tool displays temperature in Celsius (°C). This is the temperature inside the coolant heater control module.
Coolant Heater Current	—	Varies	The scan tool displays the present electric current flow value of the coolant heater in amps.
Desired Engine Coolant Bypass Valve Position	—	Not Requested	The scan tool displays Not Requested, Bypass, or Connected. This parameter displays the requested target position of the Coolant Bypass Valve.
Engine Coolant Heater Command	—	Varies	The scan tool displays in kW. This is the serial data command to control the device to heat up the coolant in case the engine does not produce enough heat.
Front Blower Motor State	—	Varies	The scan tool displays Not Determined, Off, Auto, Manual, or Manual Max. This parameter indicates the current mode or condition of the front blower motor.
Heater Pump Speed	—	Varies	The scan tool displays the heater pump speed in RPM. This is a coolant pump which circulates heat through the heater core to maintain cabin temperature. While the vehicle is in Autostop, the pump can interrupt the Autosop timing, if the cabin temperature is too low.

Parameter	System State	Expected Value	Description
HVAC Afterblow	—	Inactive	The scan tool displays Active or Inactive. This parameter displays whether the afterblow function is in a functioning state or not. The afterblow function temporarily turns on the fan after the vehicle is off to dry the evaporator core which will reduce microbial growth and odors. An evaporator is a device in a process used to turn the liquid form of a chemical substance into its gaseous-form/vapor.
HVAC Afterblow - Blower Motor Speed	—	Varies	This parameter displays how fast the fan is running while in an afterblow condition. The fan speed is displayed as steps from 0 to 12 with 0 being off and 12 being the fastest speed. The afterblow function temporarily turns on the fan after the vehicle is off to dry the evaporator core which will reduce microbial growth and odors. An evaporator is a device in a process used to turn the liquid form of a chemical substance into its gaseous-form/vapor.
HVAC Afterblow Configuration	—	—	—
HVAC System Heater Core Coolant Flow Rate Feedback	—	Varies	The scan tool displays the coolant flowing rate in L/min. The HVAC System Heater Core contains coolant that flows though the core to heat the vehicle passenger compartment. The system is controlled by a module. This parameter indicates the coolant flow rate through the heater core requested by the module.
HVAC System Heater Core Coolant Flow Rate Request	—	Varies	The scan tool displays the coolant flowing rate in L/s. The HVAC System Heater Core contains coolant that flows though the core to heat the vehicle passenger compartment. The system is controlled by a module. This parameter indicates the coolant flow rate through the heater core requested by the module.
Rear Defogger Activated by Automatic	—	Yes	The Auto Rear Defogger (heating wires in the glass) can automatically activate if the ambient temperature is below 5°C. This parameter has the states Yes/No.
Rear Defogger Command	—	—	—
Rear Defogger Deactivation Reason	—	—	—
Rear Defogger Indicator	—	—	—
Rear Defogger Mode	—	—	—

Parameter	System State	Expected Value	Description
Rear Defogger On Time Remaining	—	—	—
Rear Defogger Relay Command	—	—	—
Rear Defogger Status	—	—	—
Rear Defogger Switch	—	—	—
Sun Azimuth	—	—	—
Sun Elevation	—	—	—

Body Control Module — HVAC Door Position Data 1 — Scan Tool Data Parameters

Parameter	System State	Expected Value	Description
Operating Conditions: Ignition ON/Vehicle in Service Mode, Vehicle in Park, All Doors Closed			
Air Recirculation Door Actuator Command	—	Varies	This is the serial data command to move the flap of the Recirculation Door, in counts or pulses, for a HVAC system door. Recirculation is using inside air for the HVAC system, instead of outside fresh air.
Left Temperature Door Position Command	—	Varies	The scan tool displays percentage (%). This is the serial data command to control the actual position (angle) of the flap that controls the air flow (and therefore the air temperature) through the left heater core.
Low Speed Pollution Taking Recirc Action	—	—	—

Body Control Module — HVAC Door Position Data 2 — Scan Tool Data Parameters

Parameter	System State	Expected Value	Description
Operating Conditions: Ignition ON/Vehicle in Service Mode, Vehicle in Park, All Doors Closed			
Right Temperature Door Position Command	—	Varies	The scan tool displays percentage (%). This is the serial data command to move the position (angle) of the flap that controls the air flow (and therefore the air temperature) through the right heater core.

Body Control Module — HVAC Faceplate Data — Scan Tool Data Parameters

Parameter	System State	Expected Value	Description
Operating Conditions: Ignition ON/Vehicle in Service Mode, Vehicle in Park, All Doors Closed			
Air Recirculation Door Position	—	Varies	The scan tool displays the command status of the HVAC control module recirculation switch: Not Determined, Auto, Fresh Air, or Recirc. The mode of recirculation means the air inside the vehicle is recirculated rather than drawn from outside.

Parameter	System State	Expected Value	Description
Air Quality Sensor Switch	—	Off	The scan tool displays Off, Low Sensitivity, or Hi Sensitivity. This parameter describes the switch state of the Air Quality Sensor on the HVAC Faceplate.
Auxiliary Blower Motor Switch	—	Off	The scan tool displays Not Determined, Off, Auto, Manual, or Manual Max. This parameter reflects the current state of the switch in the rear of the vehicle that controls the rear blower. This describes the rear blower motor for the HVAC system. This is supplemental to the primary blower fan.
Desired Left Temperature	—	Varies	The scan tool displays Temp Set Off, Temp Set Normal, Temp Set Low, or Temp Set Hi. This parameter displays the setting of left temperature.
Desired Right Temperature	—	Varies	The scan tool displays Temp Set Off, Temp Set Normal, Temp Set Low, or Temp Set Hi. This parameter displays the setting of right temperature.

Body Control Module — Hybrid/EV Data — Scan Tool Data Parameters

Parameter	System State	Expected Value	Description
Operating Conditions: Ignition ON/Vehicle in Service Mode, Vehicle in Park, All Doors Closed			
Coolant Heater Control Module Temperature	—	Varies	The scan tool displays temperature in Celsius (°C). This is the temperature inside the coolant heater control module.

Body Control Module — Indicator Data — Scan Tool Data Parameters

Parameter	System State	Expected Value	Description
Operating Conditions: Ignition ON/Vehicle in Service Mode, Vehicle in Park, All Doors Closed			
Child Security Lock Indicator command	—	Off	The scan tool displays On or Off.
Lane Departure Warning Indicator Status	—	Off	The scan tool displays On or Off.
Security Indicator Command	—	Off	The scan tool displays On or Off.

Body Control Module — Interior Lighting Data — Scan Tool Data Parameters

Parameter	System State	Expected Value	Description
Operating Conditions: Ignition ON/Vehicle in Service Mode, Vehicle in Park, All Doors Closed			
Cargo Lamp Command	—	Inactive	The scan tool displays Active or Inactive.
Cargo Lamp Indicator	—	Inactive	The scan tool displays Active or Inactive.

Parameter	System State	Expected Value	Description
Cargo Mirror Lamp	—	Inactive	The scan tool displays Active or Inactive.
Dome Lamp Command	—	Off	The scan tool displays On or Off.
Door Ambient Lighting Command	—	Off	The scan tool displays On or Off.
Front Courtesy Lamps	—	Inactive	The scan tool displays Active or Inactive.
Front Footwell Ambient Lighting Command	—	Off	The scan tool displays On or Off.
Instrument Panel Ambient Lighting Command	—	Off	The scan tool displays On or Off.
Interior Courtesy Lamps Command	—	Inactive	The scan tool displays Active or Inactive.
Left Turn Signal Switch	—	Inactive	The scan tool displays Active or Inactive.
Right Turn Signal Switch	—	Inactive	The scan tool displays Active or Inactive.
Overhead Ambient Lighting Command	—	Off	The scan tool displays On or Off.
Park Lamps Indicator	—	Inactive	The scan tool displays Active or Inactive.
Rear Footwell Ambient Lighting Command	—	Off	The scan tool displays On or Off.
Welcome Lighting	—	Off	The scan tool displays On or Off.

Body Control Module — Keyless Entry Data — Scan Tool Data Parameters

Parameter	System State	Expected Value	Description
Operating Conditions: Ignition ON/Vehicle in Service Mode, Vehicle in Park, All Doors Closed			
Current Number of Key Fobs Programmed	—	Varies	This parameter indicates how many transmitters have been learned to the Body Control Module currently.
Key Fob Identifier	—	Varies	This parameter refers to the part number of key fob or transmitter being placed in the backup pocket location that uses the radio transmitter inside a vehicle key used to control the central door locking via button presses.
Key Fob 1 Malfunction	—	No	The scan tool displays Yes or No. This parameter indicates a fault in transmitter # 1.
Key Fob 2 Malfunction	—	No	The scan tool displays Yes or No. This parameter indicates a fault in transmitter # 2.
Key Fob 3 Malfunction	—	No	The scan tool displays Yes or No. This parameter indicates a fault in transmitter # 3.
Key Fob 4 Malfunction	—	No	The scan tool displays Yes or No. This parameter indicates a fault in transmitter # 4.

Parameter	System State	Expected Value	Description
Key Fob 5 Malfunction	—	No	The scan tool displays Yes or No. This parameter indicates a fault in transmitter # 5.
Key Fob 6 Malfunction	—	No	The scan tool displays Yes or No. This parameter indicates a fault in transmitter # 6.
Key Fob 7 Malfunction	—	No	The scan tool displays Yes or No. This parameter indicates a fault in transmitter # 7.
Key Fob 8 Malfunction	—	No	The scan tool displays Yes or No. This parameter indicates a fault in transmitter # 8.
Number of Key Fobs Learned	—	Varies	This parameter indicates how many transmitters have been programmed to the Keyless Entry Control Module.
Total Key Fobs Erased	—	Off	This parameter indicates the number of transmitters erased from the Body Control Module memory.
Passive Entry Disabled Due to Lack of Motion Counter	—	Varies	This parameter indicates the count value of the passive entry inhibited due to no key fob or transmitter movement.
Passive Start Disabled Due to Excessive Motion Counter	—	Varies	This parameter indicates the count value of the passive start inhibited due to large key fob or transmitter movement.
Passive Start Diabled Due to Lack of Motion Counter	—	Varies	This parameter indicates the count value of the passive start inhibited due to no key fob or transmitter movement.

Body Control Module — Outside Rear View Mirror Data — Scan Tool Data Parameters

Parameter	System State	Expected Value	Description
Operating Conditions: Ignition ON/Vehicle in Service Mode, Vehicle in Park, All Doors Closed			
Mirror Folding	—	Inactive	The scan tool displays Inactive, Fold, or Unfold.
Mirror Select Switch	—	Not Active	The scan tool displays Active or Inactive.

Body Control Module — Power Mode Data — Scan Tool Data Parameters

Parameter	System State	Expected Value	Description
Operating Conditions: Ignition ON/Vehicle in Service Mode, Vehicle in Park, All Doors Closed			
Accessory/Retained Accessory Power Relay Command	—	Inactive	The scan tool displays Active or Inactive.
Backup Run/Crank Relay Command	—	Inactive	The scan tool displays Active or Inactive.
Backup System Power Mode	—	Off	The scan tool displays Off, Accessory, Run, Start, or Propulsion Active. This parameter indicates Power Mode determined by Serial Data Gateway Module.

Parameter	System State	Expected Value	Description
Battery Saver Mode	—	Off	The scan tool displays Off, Assembly Plant Mode, Transport Mode, or Storage Mode.
Ignition Switch Status	—	Varies	The scan tool displays Short to Ground, Active, Inactive, or Open/Short to Battery.
Power Mode	—	Varies	The scan tool displays Off, Accessory, Run, Start, or Propulsion Active. This parameter indicates the current power mode of the module.
Power Mode Timeout	—	Disable	The scan tool displays Enable or Disable. This parameter disables or enables the power mode timeout function (not whether timer is active or inactive) and indicates whether or not the power mode timeout function has been disabled allowing to stay in power mode indefinitely (not whether timer is active or inactive).
Run/Crank Relay Command	—	Inactive	The scan tool displays Active or Inactive.
Run Relay Command	—	Inactive	The scan tool displays Active or Inactive.

Body Control Module — Rear Exterior Lighting Data — Scan Tool Data Parameters

Parameter	System State	Expected Value	Description
Operating Conditions: Ignition ON/Vehicle in Service Mode, Vehicle in Park, All Doors Closed			
Backup Lamps	—	Off	The scan tool displays On or Off.
Center High Mounted Stop Lamp	—	Off	The scan tool displays On or Off.
Hands-Free Liftgate Sensor Lamp	—	Off	The scan tool displays On or Off.
Left Stop Lamp Command	—	Off	The scan tool displays On or Off.
Right Stop Lamp Command	—	Off	The scan tool displays On or Off.
Left Tail Lamp	—	Off	The scan tool displays On or Off.
Right Tail Lamp	—	Off	The scan tool displays On or Off.
Left Auxiliary Tail Lamp	—	Off	The scan tool displays On or Off.
Right Auxiliary Tail Lamp	—	Off	The scan tool displays On or Off.
Left Rear Turn Signal Lamp Command	—	Off	The scan tool displays On or Off.
Right Rear Turn Signal Lamp Command	—	Off	The scan tool displays On or Off.
Left Trailer Turn Signal/Stop Lamp Command	—	Off	The scan tool displays On or Off.

Parameter	System State	Expected Value	Description
Right Trailer Turn Signal/Stop Lamp Command	—	Off	The scan tool displays On or Off.
License Plate Lamps Command	—	Off	The scan tool displays On or Off.
Rear Fog Lamp Command	—	Off	The scan tool displays On or Off.
Tail Lamps	—	Off	The scan tool displays On or Off.
Trailer Backup Lamps Command	—	Off	The scan tool displays On or Off.

Body Control Module — Rear HVAC Data — Scan Tool Data Parameters

Parameter	System State	Expected Value	Description
Operating Conditions: Ignition ON/Vehicle in Service Mode, Vehicle in Park, All Doors Closed			
Lower Rear Duct Temperature	—	Varies	The scan tool displays temperature in Celsius (°C). This is the temperature reading in the HVAC air routing system.
Upper Rear Duct Temperature	—	Varies	The scan tool displays temperature in Celsius (°C). This is the temperature reading in the HVAC air routing system.

Body Control Module — Remote Vehicle Start Data — Scan Tool Data Parameters

Parameter	System State	Expected Value	Description
Operating Conditions: Ignition ON/Vehicle in Service Mode, Vehicle in Park, All Doors Closed			
Engine Stalled During Remote Vehicle Start Mode	—	Varies	This parameter indicates the number of times the engine was stalled or unexpectedly stops running. This is part of the Remote Vehicle Start subsystem that disables remote start.
Park Lamps Request	—	No	The scan tool displays Yes or No. This parameter refers to the state (on or off) of the electronic request to illuminate the lamps located on the exterior four corners of the vehicle.
Remote Vehicle Start Disabled By Driver	—	Varies	This parameter determines if remote vehicle start was turned off by the driver. Remote start is activated by pressing a button on the key fob which allows the engine to start when the key fob is several yards from the vehicle.
Remote Vehicle Start Request	—	No	The scan tool displays Yes or No. This parameter displays the On / Off position or status for the remote start functionality.

Parameter	System State	Expected Value	Description
Remote Vehicle Start Source	—	None	The scan tool displays None, Key Fob 1, Key Fob 2, Key Fob 3, Enhanced Services, or Virtual Key. This parameter indicates which key fob was used for Remote Vehicle Start such as husband, wife, child, Onstar, bluetooth, etc...
Remote Vehicle Start Status	—	Inactive	The scan tool displays Yes or No. This parameter indicates the state of remote start which is activated by pressing a button on the key fob which allows the engine to start when the key fob is several yards from the vehicle. States are active or inactive.
Remote Vehicle Start Timer	—	Varies	This parameter indicates the amount of time the engine will run after a remote start request. One additional request is allowed which will reset the timer once. The scan tool displays time remaining in seconds.
Run/Crank Relay Command	—	None	The scan tool displays None, Active, or Deactive. This parameter indicates the state (off or on) of command for an ignition relay control circuit. "Run" means engine is started and keeps going, and "crank" engages the starter when the key in the ignition switch turns making engine turn over.
Turn Signal Lamps Request	—	No	The scan tool displays Yes or No. This parameter indicates the request for the turn signal lamps to flash during a remote start request and remain on for visual confirmation the remote start is functioning.

Body Control Module — Remote Vehicle Start Disable History Data — Scan Tool Data Parameters

Parameter	System State	Expected Value	Description
Operating Conditions: Ignition ON/Vehicle in Service Mode, Vehicle in Park, All Doors Closed			
Remote Vehicle Start Disable History 1	—	Varies	The scan tool displays Valet Mode, Run Abort, Ignition Switch Status, Hood Open Switch Signal Invalid, Hood Open Switch, Hazard Lamps Switch, Key Fob in Vehicle, Crank Abort, Brake Transmission Shift Interlock Solenoid Actuator, Content Theft Deterrent Mode, Power Mode Incorrect, Battery Voltage, Remote Vehicle Start Crank Time, or Folding Top Position. This parameter indicates one of the last eight reasons the powertrain has disabled the remote vehicle start.

Parameter	System State	Expected Value	Description
Remote Vehicle Start Disable History 2	—	Varies	The scan tool displays Valet Mode, Run Abort, Ignition Switch Status, Hood Open Switch Signal Invalid, Hood Open Switch, Hazard Lamps Switch, Key Fob in Vehicle, Crank Abort, Brake Transmission Shift Interlock Solenoid Actuator, Content Theft Deterrent Mode, Power Mode Incorrect, Battery Voltage, Remote Vehicle Start Crank Time, or Folding Top Position. This parameter indicates one of the last eight reasons the powertrain has disabled the remote vehicle start.
Remote Vehicle Start Disable History 3	—	Varies	The scan tool displays Valet Mode, Run Abort, Ignition Switch Status, Hood Open Switch Signal Invalid, Hood Open Switch, Hazard Lamps Switch, Key Fob in Vehicle, Crank Abort, Brake Transmission Shift Interlock Solenoid Actuator, Content Theft Deterrent Mode, Power Mode Incorrect, Battery Voltage, Remote Vehicle Start Crank Time, or Folding Top Position. This parameter indicates one of the last eight reasons the powertrain has disabled the remote vehicle start.

Body Control Module — Seat Heating/Venting/Cooling Data — Scan Tool Data Parameters

Parameter	System State	Expected Value	Description
Operating Conditions: Ignition ON/Vehicle in Service Mode, Vehicle in Park, All Doors Closed			
Seat Heating/Venting/Cooling Load Shed	—	Inactive	The scan tool displays Active or Inactive. When this parameter is active, it indicates the Heating/Venting/Cooling system is shutdown to reduce strain on the vehicle electrical system which is experiencing too high of a current draw.
Left Front Seat Heating/Venting/Cooling Operating Conditions	—	Varies	The scan tool displays Remote Vehicle Start, Automatic, Manual, or Autostop Request. The functional behavior of heated seats is dependent on its determined operational state. This parameter indicates the defined state which it is operating in.

Parameter	System State	Expected Value	Description
Left Front Seat Heating/ Venting/Cooling Requested Mode	—	Varies	The scan tool displays Off, Seat Back Heating, Seat Back and Cushion Heating, or Seat Venting/Cooling. This parameter indicates the type of Heated/Vented Seat function being requested, as determined by the Body Control Module tracking various inputs.
Left Front Seat Heating/ Venting/Cooling Requested Level	—	Varies	The scan tool displays Off, High, Medium, or Low. This parameter indicates the type of Heated/Vented Seat level of intensity being requested as determined by the Body Control Module tracking various inputs.
Left Front Seat Heating/ Venting/Cooling Mode	—	Varies	The scan tool displays Off, Seat Back Heating, Seat Back and Cushion Heating, or Seat Venting/Cooling. This parameter indicates the type of Heated/Vented Seat function being applied as commanded by the Body Control Module software based on a number of factors.
Left Front Seat Heating/ Venting/Cooling Level	—	Varies	The scan tool displays Off, High, Medium, or Low. This parameter indicates the type of Heated/Vented Seat level of intensity being applied as commanded by the Body Control Module software based on a number of factors.
Left Front Seat Blower Command	—	Inactive	The scan tool displays Active or Inactive. This parameter can be used for setting various blower speeds but service tool will only turn on high to verify module outputs and fan operation.
Right Front Seat Heating/ Venting/Cooling Operating Conditions	—	Varies	The scan tool displays Remote Vehicle Start, Automatic, Manual, or Autostop Request. The functional behavior of heated seats is dependent on its determined operational state. This parameter indicates the defined state which it is operating in.
Right Front Seat Heating/ Venting/Cooling Requested Mode	—	Varies	The scan tool displays Off, Seat Back Heating, Seat Back and Cushion Heating, or Seat Venting/Cooling. This parameter indicates the type of Heated/Vented Seat function being requested, as determined by the Body Control Module tracking various inputs.

Parameter	System State	Expected Value	Description
Right Front Seat Heating/ Venting/Cooling Requested Level	—	Varies	The scan tool displays Off, High, Medium, or Low. This parameter indicates the type of Heated/Vented Seat level of intensity being requested as determined by the Body Control Module tracking various inputs.
Right Front Seat Heating/ Venting/Cooling Mode	—	Varies	The scan tool displays Off, Seat Back Heating, Seat Back and Cushion Heating, or Seat Venting/Cooling. This parameter indicates the type of Heated/Vented Seat function being applied as commanded by the Body Control Module software based on a number of factors.
Right Front Seat Heating/ Venting/Cooling Level	—	Varies	The scan tool displays Off, High, Medium, or Low. This parameter indicates the type of Heated/Vented Seat level of intensity being applied as commanded by the Body Control Module software based on a number of factors.
Right Front Seat Blower Command	—	Inactive	The scan tool displays Active or Inactive. This parameter can be used for setting various blower speeds but service tool will only turn on high to verify module outputs and fan operation.

Body Control Module — Sunroof Data — Scan Tool Data Parameters

Parameter	System State	Expected Value	Description
Operating Conditions: Ignition ON/Vehicle in Service Mode, Vehicle in Park, All Doors Closed			
Sunroof Closed	—	Yes	The scan tool displays Yes or No. This parameter indicates that sunroof is not open. The sunroof is a fixed or operable opening in an automobile roof which allows light and/or fresh air to enter the passenger compartment.
Sunroof Open	—	Yes	The scan tool displays Yes or No. This parameter indicates the sunroof state that it is not closed. The sunroof is a fixed or operable opening in an automobile roof which allows light and/or fresh air to enter the passenger compartment.
Sunroof Switch	—	Varies	The scan tool displays Inactive, Open, Close, or Stop. This is the switch to move the sunroof.
Sunroof Switch Fault	—	Varies	The scan tool displays Short to Ground, Short to Battery, Stuck, or None.

Parameter	System State	Expected Value	Description
Sunroof Not Learned	—	No	The scan tool displays Yes or No. This parameter indicates that the control module has not learned the sunroof (the glass) home position.
Sunroof Motor Overtempera-ture	—	No	The scan tool displays Yes or No. This parameter indicates that the motor that operates the sunroof motor is too hot to operate properly.
Sunroof Obstruction	—	No	The scan tool displays Yes or No. This parameter indicates that an obstruction is detected which prevents the movement of the sunroof.
Sunroof System Voltage Low	—	No	The scan tool displays Yes or No. This parameter indicates the sunroof performance is degraded due to voltage being below a certain threshold.
Sunroof Vent	—	No	The scan tool displays Yes or No. This parameter indicates the sunroof is partially open.
Sunshade Closed	—	Yes	The scan tool displays Yes or No.
Sunshade Open	—	Yes	The scan tool displays Yes or No.
Sunshade Switch	—	Varies	The scan tool displays Inactive, Open, Close, or Stop. This is the switch to move the sunshade (the non-transparent cover below the sunroof).
Sunshade Switch Fault	—	Varies	The scan tool displays Short to Ground, Short to Battery, Stuck, or None.
Sunshade Not Learned	—	No	The scan tool displays Yes or No. This parameter indicates that the sunshade position is not learned.
Sunshade Motor Overtemper-ature	—	Inactive	The scan tool displays Active or Inactive. This parameter indicates that the motor that operates the sunshade is too hot to operate properly.
Sunshade Obstruction	—	No	The scan tool displays Yes or No. This parameter indicates that an obstruction is detected which prevents the movement of the sunshade.
Sunshade System Voltage Low	—	No	The scan tool displays Yes or No. This parameter indicates that the sunshade performance is degraded due to voltage being below a certain threshold.

Body Control Module — Tire Pressure Monitoring Sensor Data — Scan Tool Data Parameters

Parameter	System State	Expected Value	Description
Operating Conditions: Ignition ON/Vehicle in Service Mode, Vehicle in Park, All Doors Closed			
Left Front Tire Pressure Sensor Identification	—	Varies	This parameter refers to the part number of the electronic device that measures the force of air on the interior surface of the left, front tire.
Left Front Tire Pressure Sensor Battery Status	—	Normal	The scan tool displays Normal or Low Pressure. This parameter displays the state of the power supply (battery) for the left front tire pressure sensor which is an electronic device that measures the force of air on the interior surface of the tire.
Left Front Tire Pressure Sensor Status	—	Varies	This parameter will display different types of sensor faults. The tire pressure sensors are mounted inside a tire assembly on valve stems or wheel rims.
Left Front Tire Pressure Sensor Signal Strength	—	Varies	The tire pressure monitoring system detects a pressure loss at the tires. Each wheel is equipped with a pressure sensor to measure the pressure and temperature. This parameter displays the signal strength of the sensor.
Left Front Tire Pressure Signal Frame Count	—	Varies	This is the number of data frames the tire pressure sensor is transmitting while driving.
Left Front Tire Pressure Signal Packet Count	—	Varies	This is the number of packet counts the tire pressure sensor is transmitting while driving.
Left Rear Tire Pressure Sensor Identification	—	Varies	This parameter refers to the part number of the electronic device that measures the force of air on the interior surface of the left, rear tire.
Left Rear Tire Pressure Sensor Battery Status	—	Normal	The scan tool displays Normal or Low Pressure. This parameter displays the state of the power supply (battery) for the left rear tire pressure sensor which is an electronic device that measures the force of air on the interior surface of the tire.
Left Rear Tire Pressure Sensor Status	—	Varies	This parameter will display different types of sensor faults. The tire pressure sensors are mounted inside a tire assembly on valve stems or wheel rims.

Parameter	System State	Expected Value	Description
Left Rear Tire Pressure Sensor Signal Strength	—	Varies	The tire pressure monitoring system detects a pressure loss at the tires. Each wheel is equipped with a pressure sensor to measure the pressure and temperature. This parameter displays the signal strength of the sensor.
Left Rear Tire Pressure Signal Frame Count	—	Varies	This is the number of data frames the tire pressure sensor is transmitting while driving.
Left Rear Tire Pressure Signal Packet Count	—	Varies	This is the number of packet counts the tire pressure sensor is transmitting while driving.
Right Front Tire Pressure Sensor Identification	—	Varies	This parameter will display the six digit identification number of the sensor indicated which is an electronic device that measures the force of air on the interior surface of the tire.
Right Front Tire Pressure Sensor Battery Status	—	Normal	The scan tool displays Normal or Low Pressure. This parameter displays the state of the power supply (battery) for the right front tire pressure sensor which is an electronic device that measures the force of air on the interior surface of the tire.
Right Front Tire Pressure Sensor Status	—	Varies	This parameter will display different types of sensor faults. The tire pressure sensors are mounted inside a tire assembly on valve stems or wheel rims.
Right Front Tire Pressure Sensor Signal Strength	—	Varies	The tire pressure monitoring system detects a pressure loss at the tires. Each wheel is equipped with a pressure sensor to measure the pressure and temperature. This parameter displays the signal strength of the sensor.
Right Front Tire Pressure Signal Frame Count	—	Varies	This is the number of data frames the tire pressure sensor is transmitting while driving.
Right Front Tire Pressure Signal Packet Count	—	Varies	This is the number of packet counts the tire pressure sensor is transmitting while driving.
Right Rear Tire Pressure Sensor Identification	—	Varies	This parameter will display the six digit identification number of the sensor indicated which is an electronic device that measures the force of air on the interior surface of the tire.

Parameter	System State	Expected Value	Description
Right Rear Tire Pressure Sensor Battery Status	—	Normal	The scan tool displays Normal or Low Pressure. This parameter displays the state of the power supply (battery) for the right rear tire pressure sensor which is an electronic device that measures the force of air on the interior surface of the tire.
Right Rear Tire Pressure Sensor Status	—	Varies	This parameter will display different types of sensor faults. The tire pressure sensors are mounted inside a tire assembly on valve stems or wheel rims.
Right Rear Tire Pressure Sensor Signal Strength	—	Varies	The tire pressure monitoring system detects a pressure loss at the tires. Each wheel is equipped with a pressure sensor to measure the pressure and temperature. This parameter displays the signal strength of the sensor.
Right Rear Tire Pressure Signal Frame Count	—	Varies	This is the number of data frames the tire pressure sensor is transmitting while driving.
Right Rear Tire Pressure Signal Packet Count	—	Varies	This is the number of packet counts the tire pressure sensor is transmitting while driving.

Body Control Module — Tire Pressure Monitoring System Data — Scan Tool Data Parameters

Parameter	System State	Expected Value	Description
Operating Conditions: Ignition ON/Vehicle in Service Mode, Vehicle in Park, All Doors Closed			
Left Front Tire Pressure	—	Varies	Tire pressure is a measure of the amount of air in a vehicle's tires, in pounds per square inch (PSI). This parameter is the amount of pressure present in the front of the vehicle on the left side.
Left Front Tire Pressure Sensor Mode	—	Varies	The scan tool displays Learn Mode - Remotely Triggered, Undefined, Re-Measure, Drive Mode, Power Down, Wake-Up, or Learn Mode - Pressure Triggered. This parameter refers to the operational level of the electronic device that measures the force of air on the interior surface of the left front tire.
Left Front Tire Pressure Status	—	Varies	The scan tool displays Unknown, Nominal, Very Low Pressure, Low, Weak Signal, or High. This parameter indicates the state of the tire based on tire pressure.

Parameter	System State	Expected Value	Description
Left Front Tire Temperature	—	Varies	The tire pressure monitoring system detects a pressure loss at the tires. Each wheel is equipped with a pressure sensor to measure the pressure and temperature. This parameter displays the temperature of the tire.
Left Rear Tire Pressure	—	Varies	Tire pressure is a measure of the amount of air in a vehicle's tires, in pounds per square inch (PSI). This parameter is the amount of pressure present in the rear of the vehicle on the left side.
Left Rear Tire Pressure Sensor Mode	—	Varies	The scan tool displays Learn Mode - Remotely Triggered, Undefined, Re-Measure, Drive Mode, Power Down, Wake-Up, or Learn Mode - Pressure Triggered. This parameter refers to the operational level of the electronic device that measures the force of air on the interior surface of the left rear tire.
Left Rear Tire Pressure Status	—	Varies	The scan tool displays Unknown, Nominal, Very Low Pressure, Low, Weak Signal, or High. This parameter identifies status of left rear tire pressure.
Left Rear Tire Temperature	—	Varies	The tire pressure monitoring system detects a pressure loss at the tires. Each wheel is equipped with a pressure sensor to measure the pressure and temperature. This parameter displays the temperature of the tire.
Right Front Tire Pressure	—	Varies	Tire pressure is a measure of the amount of air in a vehicle's tires, in pounds per square inch (PSI). This parameter is the amount of pressure present in the front of the vehicle on the right side.
Right Front Tire Pressure Sensor Mode	—	Varies	The scan tool displays Learn Mode - Remotely Triggered, Undefined, Re-Measure, Drive Mode, Power Down, Wake-Up, or Learn Mode - Pressure Triggered. This parameter refers to the operational level of the electronic device that measures the force of air on the interior surface of the right front tire.
Right Front Tire Pressure Status	—	Varies	The scan tool displays Unknown, Nominal, Very Low Pressure, Low, Weak Signal, or High. This parameter indicates the state of the tire based on tire pressure.

Parameter	System State	Expected Value	Description
Right Front Tire Temperature	—	Varies	The tire pressure monitoring system detects a pressure loss at the tires. Each wheel is equipped with a pressure sensor to measure the pressure and temperature. This parameter displays the temperature of the tire.
Right Rear Tire Pressure	—	Varies	Tire pressure is a measure of the amount of air in a vehicle's tires, in pounds per square inch (PSI). This parameter is the amount of pressure present in the rear of the vehicle on the right side.
Right Rear Tire Pressure Sensor Mode	—	Varies	The scan tool displays Learn Mode - Remotely Triggered, Undefined, Re-Measure, Drive Mode, Power Down, Wake-Up, or Learn Mode - Pressure Triggered. This parameter refers to the operational level of the electronic device that measures the force of air on the interior surface of the right rear tire.
Right Rear Tire Pressure Status	—	Varies	The scan tool displays Unknown, Nominal, Very Low Pressure, Low, Weak Signal, or High. This parameter indicates the state of the tire based on tire pressure.
Right Rear Tire Temperature	—	Varies	The tire pressure monitoring system detects a pressure loss at the tires. Each wheel is equipped with a pressure sensor to measure the pressure and temperature. This parameter displays the temperature of the tire.
Last Tire Fill Alert Notification	—	Varies	The scan tool displays Left Rear Inner, Left Rear Outer, Right Rear Outer, Left Front, Right Rear Inner, Spare, Unknown, or Right Front. Tire Fill Alert is a software feature that indicates when a predetermined pressure level is reached performed on the last tire.
Tire Fill Alert System State - Current	—	Varies	The scan tool displays Non Monitor, Monitoring, Active, or Achieved. Tire Fill Alert is software feature in the Tire Pressure Module system. Basically, the Tire Pressure Module system enables the High Pressure Warnings when the air pressure level goes higher than target pressure level. This parameter indicates the immediate status of the system in the present power cycle.

Parameter	System State	Expected Value	Description
Tire Fill Alert System State - Previous	—	Varies	The scan tool displays Non Monitor, Monitoring, Active, or Achieved. Tire Fill Alert is software feature in the Tire Pressure Module System. Basically, the Tire Pressure Module system enables the High Pressure Warnings when the air pressure level goes higher than target pressure level. This parameter indicates the status in the former power cycle.
Self Auto Learn Status - Left Front Sensor	—	Inactive	The scan tool displays Active or Inactive. For vehicles with Self Auto Learn capable sensors, this parameter is used to define transmission during rolling Self Auto Learn state. A value of 1 means Self Auto Learn rolling state is Active and a value of 0 sets for all other non Self Auto Learn transmissions.
Self Auto Learn Status - Left Rear Sensor	—	Inactive	The scan tool displays Active or Inactive. For vehicles with Self Auto Learn capable sensors, this parameter is used to define transmission during rolling Self Auto Learn state. A value of 1 means Self Auto Learn rolling state is Active and a value of 0 sets for all other non Self Auto Learn transmissions.
Self Auto Learn Status - Right Front Sensor	—	Inactive	The scan tool displays Active or Inactive. For vehicles with Self Auto Learn capable sensors, this parameter is used to define transmission during rolling Self Auto Learn state. A value of 1 means Self Auto Learn rolling state is Active and a value of 0 sets for all other non Self Auto Learn transmissions.
Self Auto Learn Status - Right Rear Sensor	—	Inactive	The scan tool displays Active or Inactive. For vehicles with Self Auto Learn capable sensors, this parameter is used to define transmission during rolling Self Auto Learn state. A value of 1 means Self Auto Learn rolling state is Active and a value of 0 sets for all other non Self Auto Learn transmissions.

Body Control Module — Windows Data — Scan Tool Data Parameters

Parameter	System State	Expected Value	Description
Operating Conditions: Ignition ON/Vehicle in Service Mode, Vehicle in Park, All Doors Closed			
All Windows Up/Down	—	Close	The scan tool displays Open or Close.
Driver Window Learned	—	Yes	The scan tool displays Yes or No.

Parameter	System State	Expected Value	Description
Driver Window Motor Relay Fault Status	—	OK	This scan tool displays OK or Malfunction.
Left Front Window Express Down	—	Inactive	The scan tool displays Active or Inactive.
Left Front Window Express Up	—	Inactive	The scan tool displays Active or Inactive.
Left Front Window Learned Indicator	—	Not Active	The scan tool displays Active or Not Active.
Left Front Window Lockout Status	—	Inactive	The scan tool displays Active or Inactive.
Left Front Window Motor Current	—	Varies	The scan tool displays left front window motor current in amperes (A).
Left Front Window Switch	—	Inactive	The scan tool displays Inactive, Up, Express Up, Down, Express Down, or Stop.
Left Rear Window Express Up	—	Inactive	The scan tool displays Active or Inactive.
Left Rear Window Express Down	—	Inactive	The scan tool displays Active or Inactive.
Left Rear Window Learned	—	Yes	The scan tool displays Yes or No.
Left Rear Window Learned Indicator	—	Not Active	The scan tool displays Active or Not Active.
Left Rear Window Lockout Status	—	Inactive	The scan tool displays Active or Not Active.
Left Rear Window Motor Current	—	Varies	The scan tool displays left rear window motor current in amperes (A).
Left Rear Window Motor Relay Fault Status	—	OK	This scan tool displays OK or Malfunction.
Left Rear Window Switch	—	Inactive	The scan tool displays Inactive, Up, Express Up, Down, Express Down, or Stop.
Passenger Window Learned	—	Yes	The scan tool displays Yes or No.
Passenger Window Motor Relay Fault Status	—	OK	This scan tool displays OK or Malfunction.
Right Front Window Express Up	—	Inactive	The scan tool displays Active or Inactive.
Right Front Window Express Down	—	Inactive	The scan tool displays Active or Inactive.
Right Front Window Learned Indicator	—	Not Active	The scan tool displays Active or Not Active.
Right Front Window Lockout Status	—	Inactive	The scan tool displays Active or Inactive.
Right Front Window Motor Current	—	Varies	The scan tool displays right front window motor current in amperes (A).
Right Front Window Switch	—	Inactive	The scan tool displays Inactive, Up, Express Up, Down, Express Down, or Stop.
Right Rear Window Express Up	—	Inactive	The scan tool displays Active or Inactive.

Parameter	System State	Expected Value	Description
Right Rear Window Express Down	—	Inactive	The scan tool displays Active or Inactive.
Right Rear Window Learned	—	Yes	The scan tool displays Yes or No.
Right Rear Window Learned Indicator	—	Not Active	The scan tool displays Active or Not Active.
Right Rear Window Lockout Status	—	Inactive	The scan tool displays Active or Inactive.
Right Rear Window Motor Current	—	Varies	The scan tool displays right rear window motor current in amperes (A).
Right Rear Window Motor Relay Fault Status	—	OK	This scan tool displays OK or Malfunction.
Right Rear Window Switch	—	Inactive	The scan tool displays Inactive, Up, Express Up, Down, Express Down, or Stop.
Window Lockout Indicator	—	Inactive	The scan tool displays Active or Inactive.

Body Control Module — Wiper/Washer Data — Scan Tool Data Parameters

Parameter	System State	Expected Value	Description
Operating Conditions: Ignition ON/Vehicle in Service Mode, Vehicle in Park, All Doors Closed			
Windshield Washer Switch	—	Off	This parameter is used to display the state of the windshield washer switch. The states are On or Off. This is the electrical connection that controls the input to the motor that causes washer fluid to be dispensed on the front windshield.
Windshield Wiper Switch	—	Off	The scan tool displays Off, Sensitivity 1, Sensitivity 2, Sensitivity 3, Sensitivity 4, Sensitivity 5, Low, or High. This is the electrical connection that controls the input to the motor that causes movement of the wiper arm to clear the front windshield.
Windshield Wiper Mode	—	Varies	The scan tool displays Low, High, Delay 1, Delay 2, Delay 3, Delay 4, Delay 5, Suspended Due to Engine Crank, Parked, Service Park, Depressed Park, or Winter Park. This parameter displays the windshield wiper mode status.
Windshield Wiper Auto Mode Switch	—	—	—
Windshield Wiper Motor Protection Mode	—	—	—

Body Control Module — Tire Pressure Monitoring System Data – Front — Scan Tool Data Parameters

Parameter	System State	Expected Value	Description
Operating Conditions: Ignition ON/Vehicle in Service Mode, Vehicle in Park, All Doors Closed			
Selected Front Tire Type	—	Standard Load	The scan tool displays No Tire Type, Standard Load, Extra Load, Load Range C, Load Range D, or Load Range E. This parameter displays the front tire type.
Front Tire Pressure on Placard	—	Varies	This parameter reads the tire pressures selected for the front of the vehicle during programming / vehicle setup. Placard is the label printed on the driver side door. The recommended tire inflation pressures are listed on that label. The purpose of this parameter is to monitor for vehicles which have for some reason cleared the placard values to zero.
Front Tire Pressure on Placard (Eco)	—	Varies	This parameter shows the tire pressure printed on the label (placard) in the driver side door. There are 3 pressures given on the label for Comfort, Eco, Fully Loaded.
Front Tire Pressure on Placard (Comfort)	—	Varies	This parameter shows the tire pressure printed on the label (placard) in the driver side door. There are 3 pressures given on the label for Comfort, Eco, Fully Loaded.
Front Tire Pressure on Placard (Fully Loaded)	—	Varies	This parameter shows the tire pressure printed on the label (placard) in the driver side door. There are 3 pressures given on the label for Comfort, Eco, Fully Loaded.
Tire Pressure Monitoring System Regulation Type	—	Varies	The scan tool displays FMVSS, China, ECER64, or None. The Tire Pressure Monitoring System can be built to follow different legal standards. This parameter shows the name of the regulation (law giving entity), like Federal Motor Vehicle Safety Standards or Economic Comission for Europe.

Body Control Module — Tire Pressure Monitoring System Data – Rear — Scan Tool Data Parameters

Parameter	System State	Expected Value	Description
Operating Conditions: Ignition ON/Vehicle in Service Mode, Vehicle in Park, All Doors Closed			
Selected Rear Tire Type	—	Standard Load	The scan tool displays No Tire Type, Standard Load, Extra Load, Load Range C, Load Range D, or Load Range E. This parameter is used to display the type of tire selected (Load Range) for rear of the vehicle. The load range of the tire is generally how much weight or load the tire is capable performing.
Rear Tire Pressure on Placard	—	Varies	This parameter reads the tire pressures selected for the rear of the vehicle during programming / vehicle setup. Placard is the label printed on the driver side door. The recommended tire inflation pressures are listed on that label. The purpose of this parameter is to monitor for vehicles which have for some reason cleared the placard values to zero.
Rear Tire Pressure on Placard (Eco)	—	Varies	This parameter shows the tire pressure printed on the label (placard) in the driver side door. There are 3 pressures given on the label for Comfort, Eco, Fully Loaded.
Rear Tire Pressure on Placard (Comfort)	—	Varies	This parameter shows the tire pressure printed on the label (placard) in the driver side door. There are 3 pressures given on the label for Comfort, Eco, Fully Loaded.
Rear Tire Pressure on Placard (Fully Loaded)	—	Varies	This parameter shows the tire pressure printed on the label (placard) in the driver side door. There are 3 pressures given on the label for Comfort, Eco, Fully Loaded.
Tire Pressure Monitoring System Regulation Type	—	Varies	The scan tool displays FMVSS, China, ECER64, or None. The Tire Pressure Monitoring System can be built to follow different legal standards. This parameter shows the name of the regulation (law giving entity), like Federal Motor Vehicle Safety Standards or Economic Comission for Europe.

Body Control Module — Vehicle Access Data — Scan Tool Data Parameters

Parameter	System State	Expected Value	Description
Operating Conditions: Ignition ON/Vehicle in Service Mode, Vehicle in Park, All Doors Closed			
Child Security Lock - Lock Command	—	Inactive	The scan tool displays Inactive or Lock.

Parameter	System State	Expected Value	Description
Child Security Lock - Unlock Command	—	Inactive	The scan tool displays Inactive or Unlock.
Driver Door Open Switch	—	Inactive	This scan tool displays Active or Inactive.
Fuel Fill Door Lock	—	Inactive	The scan tool displays Inactive or Lock.
Fuel Fill Door Unlock	—	Inactive	The scan tool displays Inactive or Unlock.
Glove Box Unlatch Switch	—	Locked	The scan tool displays Locked or Unlocked.
Left Front Door Ajar Switch	—	Inactive	The scan tool displays Active or Inactive.
Left Front Door Lock Command	—	Inactive	The scan tool displays Inactive or Lock.
Left Front Door Lock Indicator Command	—	Off	The scan tool displays On or Off.
Left Front Door Lock Switch	—	Inactive	The scan tool displays Active or Inactive.
Left Front Door Unlock Command	—	Inactive	The scan tool displays Inactive or Unlock.
Left Rear Door Ajar Switch	—	Inactive	The scan tool displays Active or Inactive.
Left Rear Door Lock Command	—	Inactive	The scan tool displays Inactive or Lock.
Left Rear Door Lock Indicator Command	—	Off	The scan tool displays On or Off.
Left Rear Door Unlock Command	—	Inactive	The scan tool displays Inactive or Unlock.
Passenger Door Open Switch	—	Inactive	The scan tool displays Active or Inactive.
Right Front Door Ajar Switch	—	Inactive	The scan tool displays Active or Inactive.
Right Front Door Lock Command	—	Inactive	The scan tool displays Inactive or Lock.
Right Front Door Lock Indicator Command	—	Off	The scan tool displays On or Off.
Right Front Door Unlock Command	—	Inactive	The scan tool displays Inactive or Unlock.
Right Rear Door Ajar Switch	—	Inactive	The scan tool displays Active or Inactive.
Right Rear Door Lock Command	—	Inactive	The scan tool displays Inactive or Lock.
Right Rear Door Lock Indicator Command	—	Off	The scan tool displays On or Off.
Rear Door Unlock Indicator Command	—	Off	The scan tool displays On or Off.
Right Rear Door Unlock Command	—	Inactive	The scan tool displays Inactive or Unlock.
Rear Closure Release	—	Inactive	The scan tool displays Inactive or Unlock.
Rear Closure Lock Command	—	Inactive	The scan tool displays Inactive or Lock.
Rear Closure Unlock Command	—	Inactive	The scan tool displays Inactive or Unlock.

Parameter	System State	Expected Value	Description
Theft Deterrent Lock Command	—	Inactive	The scan tool displays Inactive or Lock.
Theft Deterrent Unlock Command	—	Inactive	The scan tool displays Inactive or Unlock.

Body Control Module — Content Theft Deterrent Alarm Trigger — Scan Tool Output Controls

Output Control	Description
Horn Relay Command	This output control refers to a request to initiate the sound for a vehicle's loud warning signal. This output control is used to command the horn relay on and off.

Body Control Module — Exterior Lighting — Scan Tool Output Controls

Output Control	Description
Center High Mounted Stop Lamp	This output control is used to activate the center high mounted stop lamp when selecting On. The center high mounted stop lamp should illuminate until commanded Off.
Left Stop Lamp	This output control is used to activate the left stop lamp when selecting On. The left stop lamp should illuminate until commanded Off.
Right Stop Lamp	This output control is used to activate the right stop lamp when selecting On. The right stop lamp should illuminate until commanded Off.
License Plate Lamps	This output control is used to activate the license plate lamps when selecting On. The license plate lamps should illuminate until commanded Off.
Backup Lamps	This output control is used to activate the backup lamps when selecting On. The backup lamps should illuminate until commanded Off.
Left Park Lamps	This output control is used to activate the left park lamps when selecting On. The left park lamps should illuminate until commanded Off.
Right Park Lamps	This output control is used to activate the right park lamps when selecting On. The right park lamps should illuminate until commanded Off.
Left Daytime Running Lamps	This output control is used to activate the left daytime running lamps when selecting On. The left daytime running lamps should illuminate until commanded Off.
Right Daytime Running Lamps	This output control is used to activate the right daytime running lamps when selecting On. The right daytime running lamps should illuminate until commanded Off.
Left Auxiliary Daytime Running Lamps	This output control is used to activate the left auxiliary daytime running lamps when selecting On. The left auxiliary daytime running lamps should illuminate until commanded Off.
Right Auxiliary Daytime Running Lamps	This output control is used to activate the right auxiliary daytime running lamps when selecting On. The right auxiliary daytime running lamps should illuminate until commanded Off.
Left Front Auxiliary Park Lamp Command	This output control is used to activate the left front auxiliary park lamp when selecting On. The left front auxiliary park lamp should illuminate until commanded Off.
Right Front Auxiliary Park Lamp Command	This output control is used to activate the right front auxiliary park lamp when selecting On. The right front auxiliary park lamp should illuminate until commanded Off.
Left Front Turn Signal Lamp Command	This output control is used to activate the left front turn signal lamp when selecting On. The left front turn signal lamp should illuminate until commanded Off.
Right Front Turn Signal Lamp Command	This output control is used to activate the right front turn signal lamp when selecting On. The right front turn signal lamp should illuminate until commanded Off.
Left Turn Signal Repeater Lamp Command	This output control is used to activate the left turn signal repeater lamp when selecting On. The left turn signal repeater lamp should illuminate until commanded Off.
Right Turn Signal Repeater Lamp Command	This output control is used to activate the right turn signal repeater lamp when selecting On. The right turn signal repeater lamp should illuminate until commanded Off.
Rear Fog Lamp(s)	This output control is used to activate the rear fog lamp(s) when selecting On. The rear fog lamp(s) should illuminate until commanded Off.

Body Control Module — HVAC Controls — Scan Tool Output Controls

Output Control	Description
Blower Motor	This output control commands the HVAC blower motor speed, displayed in percent. The blower should be turning. The blower motor is a motor with a cage attached to force the air through ducts such as heater, ventilation and defrost ducts.

Body Control Module — Interior Lighting — Scan Tool Output Controls

Output Control	Description
Child Security Lock Indicator	This output control is used to activate the child security lock indicator when selecting On. The child security lock indicator should illuminate until commanded Off.
Dome/Reading Lamps Front Overhead Console	This output control is used to activate the dome/reading lamps when selecting On. The dome/reading lamps should illuminate until commanded Off.
Lane Departure Warning Indicator	This output control is used to activate the lane departure warning indicator when selecting On. The lane departure warning indicator should illuminate until commanded Off.
Security Indicator	This output control is used to activate the security indicator when selecting On. The security indicator should illuminate until commanded Off.

Body Control Module — Power Mode — Scan Tool Output Controls

Output Control	Description
Run/Crank Relay Command	This output control is used to command run/crank relay active or inactive.
Accessory/Retained Accessory Power Relay Command	This output control is used to command accessory/retained accessory power relay active or inactive.
Run Relay Command	This output control is used to command run relay active or inactive.
Power Mode Timeout	This output control is used to disable or enable the power mode timeout function (not whether timer is active or inactive).
Battery Saver Mode	This output control is used to enable or disable the transport mode state.

Body Control Module — Seat Heating/Venting/Cooling — Scan Tool Output Controls

Output Control	Description
Left Front Seat Heating	This output control is used to turn on/off all outputs for heating elements for the left front seat.
Right Front Seat Heating	This output control is used to turn on/off all outputs for heating elements for the right front seat.
Driver Seat Blower	This output control can be used for setting various blower speeds, but service tool will only turn on high to verify module outputs and fan operation.
Passenger Seat Blower	This output control can be used for setting various blower speeds, but service tool will only turn on high to verify module outputs and fan operation.

Body Control Module — Configuration/Reset Functions — Scan Tool Output Controls

Output Control	Description
Brake Pedal Position Sensor Learn	
Brake Pedal Position Sensor Learn	This output control is used to activate the brake pedal position sensor learn when selecting Learn. The brake pedal position sensor learn procedure should start.
HVAC Actuators Learn	
HVAC Actuators Learn	This output control is used to activate the HVAC actuators learn when selecting Learn. The HVAC actuators learn procedure should start.

K19 Suspension Control Module: Scan Tool Information

The suspension control module scan tool data parameters list contains all suspension control related parameters that are available on the scan tool. The list is arranged in alphabetical order. A given parameter may appear in any one of the data lists.

Suspension Control Module Scan Tool Data Parameters

Parameter	System State	Expected Value	Description
Operating Conditions: Ignition ON			
Battery Voltage	—	11–14 V	The scan tool displays V. This is the current battery voltage.
Left Front Damper Actuator Command	—	varies	The scan tool displays mA. This is the current applied to the left front shock absorber actuator.
Left Front Suspension Position Sensor	—	.25–.4.75 V	The scan tool displays V. This is the signal from the left front suspension position sensor.
Right Front Damper Actuator Command	—	varies	The scan tool displays mA. This is the current applied to the right front shock absorber actuator.
Right Front Suspension Position Sensor	—	.25–.4.75 V	The scan tool displays V. This is the signal from the Right front suspension position sensor.
Left Rear Damper Actuator Command	—	varies	The scan tool displays mA. This is the current from the left rear shock absorber actuator.
Left Rear Suspension Position Sensor	—	.25–.4.75 V	The scan tool displays V. This is the signal from the left rear suspension position sensor.
Right Rear Damper Actuator Command	—	varies	The scan tool displays mA. This is the current from the right rear shock absorber actuator.
Right Rear Suspension Position Sensor	—	.25–.4.75 V	The scan tool displays V. This is the signal from the right rear suspension position sensor.
Suspension System Mode	—	varies	The scan tool displays Comfort, Sport, Normal, or Hard depending on the selected mode.
Suspension Position Sensor 5 V Reference	V	4.8–5.2 V	The scan tool displays V. This is the suspension position sensor supply voltage.

Suspension Control Module Scan Tool Output Controls

Output Control	Description
Left Front Damper Actuator	Commands the current applied to the left front shock absorber actuator Increase or Decrease.
Left Rear Damper Actuator	Commands the current applied to the left rear shock absorber actuator Increase or Decrease.
Right Front Damper Actuator	Commands the current applied to the right front shock absorber actuator Increase or Decrease.
Right Rear Damper Actuator	Commands the current applied to the right rear shock absorber actuator Increase or Decrease.

K20 Engine Control Module: Scan Tool Information

Engine Control Module Scan Tool Data

Parameter	System State	Expected Value	Description
This is a comprehensive list. Not all parameters listed are available for all applications. **Base Operating Conditions:** Engine Idling/Radiator Hose Hot/Park or Neutral/Closed Loop/Accessories OFF			
4WD Low Signal	—	Enabled/Disabled/ Invalid	This parameter displays the status of the four wheel drive system.

Parameter	System State	Expected Value	Description
5-V Reference 1	—	5 Volts	This parameter displays the voltage sensed on the 5-volt reference 1 circuit at the control module. The scan tool will display a higher value at higher voltage. The scan tool will display a lower value at lower voltage.
5-V Reference 1–4	—	5 Volts	This parameter displays the voltage sensed on the 5-volt reference circuit at the control module. The scan tool will display a higher value at higher voltage. The scan tool will display a lower value at lower voltage.
5-V Reference 1–4 Circuit Status	—	OK	This parameter will display OK if the circuit is good or Malfunction if a short to ground, short to B+ or open circuit is present.
A/C Compressor Clutch Relay Command	—	Off	This parameter displays the current command of the A/C compressor clutch relay.
A/C Compressor Clutch Relay Control Circuit High Voltage Test Status	—	OK	This parameter displays the state of the A/C compressor clutch relay control circuit. The parameter displays Malfunction if the A/C compressor clutch relay control circuit is shorted to voltage.
A/C Compressor Clutch Relay Control Circuit Low Voltage Test Status	—	OK	This parameter displays the state of the A/C compressor clutch relay control circuit. The parameter displays Malfunction if the A/C compressor clutch relay control circuit is shorted to ground.
A/C Compressor Clutch Relay Control Circuit Open Test Status	—	OK	This parameter displays the state of the A/C compressor clutch relay control circuit. The parameter displays Malfunction if the A/C compressor clutch relay control circuit is open.
A/C Disable - A/C Pressure Out of Range	—	No	This parameter displays YES if the A/C is disabled due to A/C pressure out of range.
A/C Disengage History 1–8	—	Varies	This parameter displays one of the last eight reasons that powertrain has disengaged the air conditioning compressor.
A/C High side Pressure Sensor	A/C OFF	1.43 Volts	This parameter displays 0–5 volts. The voltage applied to the ECM input for the A/C refrigerant pressure sensor.
	A/C ON	2.39 Volts	
A/C High side Pressure Sensor	A/C OFF	500–2,220 kPa (72–319 psi)	This parameter displays 0–3450 kPa (0–500 psi). The voltage applied to the ECM input from the A/C refrigerant pressure sensor is converted to a pressure value.
	A/C ON	300–1,220 kPa (43–174 psi)	
A/C Off for WOT	—	No	This parameter displays if the A/C compressor is disabled due to a wide open throttle.
A/C Request Signal	—	Yes	This parameter displays YES if the A/C is requested on.
Accelerator Pedal Position	—	0%	This parameter displays the accelerator pedal position in percentage.
Accelerator Pedal Position When Engine Overspeed Detected	—	%	This parameter displays the accelerator pedal position in percentage when the engine overspeed was detected.
Air/Fuel Equivalence Ratio Command	—	1.0	This parameter contains the commanded equivalence ratio. The equivalence ratio should be reported as 1.0 when the vehicle is in closed loop.
Ambient Air Temperature	—	Varies °C/°F	This parameter displays the outside temperature at any given altitude expressed in degrees.
Ambient Air Temperature When Recommended Maximum Fuel Alcohol Content Exceeded	—	°C (°F)	This parameter displays the estimated ambient air temperature at the most recent time that the recommended ethanol concentration was exceeded.
Ambient Humidity	—	Varies	This parameter displays the current ambient humidity in percentage.

Parameter	System State	Expected Value	Description
APP Sensors	—	Varies	This parameter displays the average of the APP sensors as calculated by the throttle actuator control (TAC) module. The APP average is a range of values indicating a low number when the accelerator pedal is not depressed to a high number when the accelerator pedal is fully depressed. This value is listed in counts.
APP Sensor 1 and 2	Accelerator pedal not actuated	0.7–1.2 Volts	This parameter displays the voltage signal sent to the control module from APP sensor 1 of the APP sensor assembly. APP sensor 1 is a range of values indicating a low voltage when the accelerator pedal is not depressed to a high voltage when the accelerator pedal is fully depressed.
	Accelerator pedal fully actuated	4.2–4.5 Volts	
APP Sensor 1 and 2	—	Agree	This parameter displays the results of a control module test that compares the signals from the APP sensors 1 and 2 . The scan tool will display Agree or Disagree. Agree indicates that APP sensor 1 and APP sensor 2 voltages correspond to the same accelerator pedal position. Disagree indicates that APP sensor 1 and APP sensor 2 voltages correspond to different accelerator pedal positions.
APP Sensor 1-2 Circuit Status	—	OK	This parameter displays that the sensed accelerator pedal position 1 or 2 sensor value is currently out of range or that a Malfunction has been detected based upon the sensed accelerator pedal position 1 or 2 sensor value being out of range
APP Sensor 1-2 Learned Applied Position	—	%	This parameter displays the learned maximum (fully applied) accelerator pedal position.
APP Sensor 1-2 Learned Released Position	—	Volts	This parameter displays the accelerator pedal sensor 1 or 2 signal at its minimum learned position (pedal released) as a percentage of its reference voltage.
APP Sensor 1-2 Position	Accelerator pedal not actuated	0%	This parameter displays the angle of the APP sensor 1 as calculated by the control module using the signal from the APP sensor 1. APP sensor 1 is a range of values indicating a low percentage when the accelerator pedal is not depressed to a high percentage when the accelerator pedal is fully depressed.
APP Sensor 1-3	Accelerator pedal not actuated	0.7–0.2 Volts	This parameter displays the voltage signal sent to the control module from APP sensor 1 of the APP sensor assembly. APP sensor 1 is a range of values indicating a low voltage when the accelerator pedal is not depressed to a high voltage when the accelerator pedal is fully depressed.
APP Sensor 1 Indicated Position	Accelerator pedal not actuated	0%	This parameter displays the angle of the APP sensor 1 as calculated by the control module using the signal from the APP sensor 1. APP sensor 1 is a range of values indicating a low percentage when the accelerator pedal is not depressed to a high percentage when the accelerator pedal is fully depressed.
	Accelerator pedal fully actuated	100%	
APP Sensor 2	Accelerator pedal not actuated	0.3–0.5 Volts	This parameter displays the voltage signal sent to the control module from APP sensor 2 of the APP sensor assembly. APP sensor 2 is a range of values indicating a low voltage when the accelerator pedal is not depressed to a high voltage when the accelerator pedal is fully depressed.
	Accelerator pedal fully actuated	2.2–2.5 Volts	
APP Sensor 2 Position	Accelerator pedal not actuated	0%	This parameter displays the angle of the APP sensor 2 as calculated by the control module using the signal from the APP sensor 2. APP sensor 2 is a range of values indicating a low percentage when the accelerator pedal is not depressed to a high percentage when the accelerator pedal is fully depressed.
	Accelerator pedal fully actuated	100%	

Parameter	System State	Expected Value	Description
APP Sensor 1 and 2	—	Agree	This parameter displays the results of a control module test that compares the signals from the APP sensors 1 and 2 . The scan tool will display Agree or Disagree. Agree indicates that APP sensor 1 and APP sensor 2 voltages correspond to the same accelerator pedal position. Disagree indicates that APP sensor 1 and APP sensor 2 voltages correspond to different accelerator pedal positions.
BARO	—	Varies with altitude	This parameter displays the barometric pressure as calculated by the control module using the signal from the MAP sensor measured when the ignition is turned ON with the engine not running. The control module will update the barometric pressure during wide-open throttle (WOT) conditions.
BARO Sensor	—	Volts	This parameter displays the barometric pressure sensor in volts.
Battery Sensor Module Battery State Information	Ignition ON	Available / Not Available	This parameter indicates if Battery State Information is Available or Not Available. Battery State Information is Not Available when there is a battery drain such as a parasitic draw.
Brake Pedal Position Circuit Signal	—	Closed	This parameter displays the state of the brake pedal position switch as determined by the brake pedal switch. The scan tool will display Open when the brake pedal is depressed, and Closed when the brake pedal is not depressed.
Brake Pedal Position Sensor	—	Volts	This parameter displays the brake pedal position as indicated by the analog sensor as a percentage of its reference voltage.
Brake Pedal Position Sensor	—	%	This parameter displays the displacement of the brake pedal, where 0% corresponds to the brake pedal being released and 100% corresponds to the brake pedal being fully applied.
Brake Pedal Position Sensor Fully Released Learn Status	—	Complete	This parameter displays the brake pedal fully released learn position status.
Brake Pedal Position Sensor Learned Released Position	—	Volts	This parameter displays the position learned for the brake pedal position sensor when the brake pedal is fully released.
Brake Pedal Position Sensor Signal	—	Released	This parameter displays the status of the brake pedal as determined by the ECM.
Brake Pedal Position Signal	—	Released	This parameter displays the state of the brake pedal position switch as determined by the brake pedal switch. The scan tool will display Applied when the brake pedal is depressed, and Released when the brake pedal is not depressed.
Calculated Air Flow	—	Varies g/s	This parameter displays the air flow as calculated by the control module.
Calculated BARO	—	Varies kPa	This parameter displays the barometric pressure as calculated by the control module.
Calculated Catalyst Temperature Bank 1 or 2	—	Varies °C/°F	This parameter displays the catalyst temperature in bank 1 or 2 as calculated by the control module.
Calculated Engine Oil Temperature	—	Varies °C/°F	This parameter displays the estimated (modeled) engine oil temperature (as a function of engine coolant temperature and other parameters).
Camshaft Position	—	Varies °	This parameter displays the position of the intake camshaft for bank 1 in terms of degrees of camshaft rotation (advance) from the park position (a value of zero represents the park position).
Camshaft Position Active Counter	—	Counts	This parameter displays a rolling count of the number of primary cam position sensor pulses. A change in the value of this parameter indicates primary camshaft position sensor activity

Parameter	System State	Expected Value	Description
Camshaft Position Actuator Solenoid Control Circuit High Voltage Test Status	—	OK	This parameter displays the state of the camshaft position actuator solenoid control circuit. The parameter displays Malfunction if the camshaft position signal circuit is shorted to voltage.
Camshaft Position Actuator Solenoid Control Circuit Low Voltage Test Status	—	OK	This parameter displays the state of the camshaft position actuator solenoid control circuit. The parameter displays Malfunction if the camshaft position signal circuit is shorted to ground.
Camshaft Position Actuator Solenoid Control Circuit Open Test Status	—	OK	This parameter displays the state of the camshaft position actuator solenoid control signal circuit. The parameter displays Malfunction if the camshaft position signal circuit is open.
Camshaft Position Command	—	Percentage	This parameter displays the commanded duty cycle from the engine control module for the intake camshaft phase of the Throttle Position for bank 1.
Camshaft Position Sensor	—	Engine Idle Speed	This parameter displays the engine speed as calculated by the control module using the signal from the CMP sensor.
Camshaft Position Variance	—	degrees	This parameter displays the absolute difference between the desired and actual positions of the intake camshaft for bank 1 in terms of degrees of camshaft rotation.
Catalyst Monitor Complete	—	Yes/No	This parameter indicates the status of the Catalyst. The scan tool displays YES when the diagnostic is complete. And NO if the diagnostic has Not ran or a malfunction is detected in the Catalyst.
Catalyst Monitor Complete This Ignition Cycle	—	Yes/No	This parameter indicates the status of the catalyst monitor diagnostic. Catalyst Monitor Test Running indicates YES or NO when the catalyst monitor diagnostic is actively running a test.
Catalyst Monitor Enabled	—	Yes/No	The scan tool displays YES when the Catalyst Monitor is Enabled. If the scan tool displays NO this could indicate a malfunction in the Catalyst Monitor circuit.
Catalyst Monitor Enabled This Ignition Cycle	—	Yes/No	This parameter indicates the status of the catalyst monitor diagnostic. Catalyst Monitor Test Running indicates YES or NO when the catalyst monitor diagnostic is actively running a test.
Catalyst Monitor Not At Idle Test Conditions Met	—	Yes/No	This parameter indicates if the off idle conditions for the catalyst monitor diagnostic have been met.
Catalyst Monitor Test Counter Bank 1 or 2	—	Counts	This parameter contains the number of iterations of the catalyst monitor diagnostic test that have been performed since a code clear for bank 1 or 2.
Catalyst Monitor Test Result Bank 1 or 2	—	No Decision	This parameter indicates the status of the catalyst monitor diagnostic for bank 1 or 2. Multiple tests may run before the diagnostic reports a Passed or Failed result.
Catalyst Monitor Test State	—	Inactive	This parameter indicates the current state of the catalyst monitor test.
Change Engine Oil Indicator Command	—	No	This parameter displays the state of the change engine oil lamp control circuit as commanded by the control module.
Clutch Pedal Starter Inhibit Switch	—	Off	This parameter displays the current state of the clutch pedal starter inhibit switch.
Clutch Pedal Switch	—	Applied	This parameter displays the current state of the clutch pedal.

Parameter	System State	Expected Value	Description
Cold Startup	—	Yes/No	This parameter displays whether the engine meets the conditions for a cold startup during the present ignition cycle. The scan tool displays YES when the conditions for a cold startup are met during this ignition cycle. The scan tool displays NO when the conditions for a cold startup are not met during the present ignition cycle. Conditions for a cold startup require the coolant temperature and the intake air temperature to be below a predetermined temperature and within a certain range of each other. These conditions must occur after the engine was warmed up to a specific temperature during the previous ignition cycle.
Component Monitor Complete	—	Yes/No	This parameter displays Yes when the Component Monitor is Complete. The engine control module looks at many input and output components to make this determination. If a malfunction is detected the scan tool will display NO.
Component Monitor Complete This Ignition Cycle	—	Yes/No	This parameter displays Yes when the Component Monitor has completed this ignition cycle. The engine control module looks at many input and output components to make this determination. If a malfunction is detected the scan tool will display NO.
Component Monitor Enabled	—	Yes/No	This parameter displays Yes when Component Monitor is Enabled. And No when it is not Enabled.
Component Monitor Enabled This Ignition Cycle	—	Yes/No	This parameter displays Yes when Component Monitor is Enabled this ignition cycle. And No when it is not Enabled this ignition cycle.
Cooling Fan Command	—	%	This parameter displays the cooling fan duty cycle.
Cooling Fan Relay 1, Relay 2, or Relay 2 and 3 Control Circuit High Voltage Test Status	—	OK	This parameter displays the state of the cooling fan control circuit. The parameter displays Malfunction if the cooling fan control circuit is shorted to voltage.
Cooling Fan Relay 1, Relay 2, or Relay 2 and 3 Control Circuit Low Voltage Test Status	—	OK	This parameter displays the state of the cooling fan control circuit. The parameter displays Malfunction if the cooling fan control circuit is shorted to ground.
Cooling Fan Relay 1, Relay 2, or Relay 2 and 3 Control Circuit Open Test Status	—	OK	This parameter displays the state of the cooling fan control circuit. The parameter displays Malfunction if the cooling fan control circuit is open.
Cooling Fan Relay 1, Relay 2, or Relay 2 and 3 Command	—	On/Off	This parameter displays the current cooling fan relay 1 command.
Cooling Fan Speed	—	RPM	This parameter displays the current fan speed in RPMs.
CPP Learned Apply Position	—	V	This parameter displays the position learned for the clutch pedal position sensor when the clutch pedal is fully applied during the associated learn procedure.
CPP Learned Release Position	—	V	This parameter displays the position learned for the clutch pedal position sensor when the clutch pedal is released.
CPP Sensor	—	V	This parameter displays the clutch pedal position sensor analog input as a percentage of its reference voltage.
CPP Sensor	—	%	This parameter displays the position learned for the clutch pedal position sensor when the clutch pedal is fully applied during the associated learn procedure.
Crank Request Signal	—	No	This parameter displays the state of the crank request input to the control module from the ignition switch. The scan tool will display Yes when the ignition switch is in the Crank position. The scan tool will display No when the ignition switch is in any other position.
Crankshaft Position Active Counter	—	Incrementing	This parameter displays an incrementing counter when the control module receives a signal from the crankshaft position (CKP) sensor.

Parameter	System State	Expected Value	Description
Crankshaft Position Signal Output Circuit High Voltage Test Status	—	OK	This parameter displays the state of the crankshaft position signal output circuit. The parameter displays Malfunction if the crankshaft position signal output circuit is shorted to voltage.
Crankshaft Position Signal Output Circuit Low Voltage Test Status	—	OK	This parameter displays the state of the crankshaft position signal output circuit. The parameter displays Malfunction if the crankshaft position signal output circuit is shorted to ground.
Crankshaft Position Signal Output Circuit Open Test Status	—	OK	This parameter displays the state of the crankshaft position signal output circuit. The parameter displays Malfunction if the crankshaft position signal output circuit is open.
Crankshaft Position Variation Learn	—	Learn in Progress / Learning Not Enabled	This parameter displays the crankshaft position variation learn status. The scan tool shows Learn in Progress until the learn is completed. The ECM learns the new variation values at each ignition cycle.
Crankshaft Position Variation Learn Attempts	—	Counts	This parameter displays the crankshaft position variation learn attempts. The ECM learns the new variation values at each ignition cycle.
Crankshaft Position Variation Learn Required Engine Speed	—	In Range / Out Of Range	This parameter displays if the crankshaft position variation learn has reached the required engine speed.
Crankshaft Position Variation Learn Status	—	Complete / Not Complete	This parameter displays the status of the crank angle sensing error learn algorithm.
Crankshaft Position Resync Counter	—	Varies	This parameter displays the number of times the control module has to synchronize the CKP sensor.
Crankshaft Position Sensor	—	Engine Idle Speed	This parameter displays the engine speed as calculated by the control module using the signal from the CKP sensor.
Cruise Control	—	Inactive	This parameter displays the status of the cruise control system as determined by the control module. The scan tool will display Yes when the cruise control system is in control of vehicle speed. The scan tool will display No when the cruise control system is not operating.
Cruise Control Cancel Switch	—	Active	This parameter displays the status of the cruise control cancel switch as determined by the control module. The scan tool will display Active when the cruise control cancel switch is on. The scan tool will display Inactive when the cruise control cancel switch is off.
Cruise Control Inhibit Reason	—	Varies	The parameter displays the reason the cruise control system cannot engage.
Cruise Control On/Off Switch	—	Off	This parameter displays the state of the On/Off switch input to the control module . The scan tool will display On when the cruise On/Off switch is On. The scan tool will display Off when the cruise On/Off switch is Off.
Cruise Control Resume/ Acceleration Switch	—	Inactive	This parameter displays the state of the Resume/Accel switch input to the control module When the cruise control switch is in the On position and the Resume/ Accel switch is activated, the scan tool displays Active. When the Resume/Accel switch is released the scan tool displays Inactive.
Cruise Control Set/Coast Switch	—	Inactive	This parameter displays the state of the Set/Coast switch input to the control module from the cruise control system. When the cruise control switch is in the on position and the Set/Coast switch is activated, the scan tool displays Active. When the Set/Coast switch is released the scan tool displays Inactive.
Cruise Disengage 1–8 History	Cruise ON	None	The Scan tool displays the last 8 cruise control disengages in order from 1 to 8. There are 20 possible causes for the cruise control to disengage.

Parameter	System State	Expected Value	Description
Cruise Resume/Acceleration Switch	—	Invalid	This parameter displays the state of the Resume/Accel switch input to the control module When the cruise control switch is in the ON position and the Resume/ Accel switch is activated, the scan tool displays ON. When the Resume/Accel switch is released the scan tool displays OFF.
Current Gear	—	#	This parameter contains the current measured, or 'active' forward gear in the transmission as interpreted or determined in the Engine Control Module.
Current Gear When Engine Overspeed Detected	—	#	This parameter contains the transmission actual gear observed upon initial detection of an overspeed condition. This value will be updated upon each subsequent overspeed condition.
Cycles of Misfire Data	—	Incrementing 0–100	This parameter displays the number of cylinder firing events recorded by the control module
Cyl. 1,4,6,7 Deactivation Solenoid Valve Command	—	Off	This parameter displays On when V4 mode is commanded or Off when V8 mode is commanded.
Cyl. 1 - 8 Deactivation Solenoid Command	—	Cyl. On/Cyl. Off	This parameter displays Cyl. On when V4 mode is commanded or Cyl. Off when V8 mode is commanded.
Cyl. Deactivation Disable - Disable 1–8 History	—	Varies	This parameter shows the reason the Active Fuel Management system changed from V4 mode to V8 mode, for the last 8 occurrences. • Ignition Voltage • Engine Oil Pressure • Engine Oil Temperature • ECT • Engine Speed • Transmission Gear • Transmission Range • Transmission Shifting • Control Function Active • Minimum Time On All Cylinders • Maximum Deactivation Time Exceeded • Oil Aeration • Deceleration Fuel Cut-Off • Injector Stable Time • Heater Performance • MAP Sensor DTC • Brake Booster Pressure Sensor DTC • TAC System DTC • Engine Oil Pressure Sensor DTC • ECT Sensor DTC • IAT Sensor DTC • VSS DTC • Cylinder Deactivation Solenoid Valve DTC • Misfire DTC • Crankshaft Position Sensor DTC • Camshaft Position Sensor DTC • Engine Controls Ignition Relay DTC • Torque Reduction

Parameter	System State	Expected Value	Description
			• Axle Torque Limiting • Engine Overtemperature Protection Active • Catalyst Overtemperature Protection • Piston Protection • Hot Coolant Mode • Engine Overspeed Protection Active • A/C Compressor Clutch On • HO2S 2 Test • 4WD Low Engaged • Vehicle Speed Too Low • Acceleration Request • Catalyst Temperature Low • Cylinder Deactivation System DTC • Calculated Torque • 4WD Low State Invalid • Minimum Time After TAC DTC • Hybrid/EV Powertrain Control Module Request • Fuel Alcohol Content Learn In Progress • Fuel Alcohol Content Too High • Maximum Throttle Exceeded
Cylinder Deactivation Performance Test	—	OK	This parameter displays OK if all the Active Fuel Management enabling conditions are met. The parameter displays Fault if one or more enabling conditions are out of range.
Cylinder Deactivation System Command	—	All Cylinder	This parameter displays several signals associated with the status of the Active Fuel Management system.
Cylinder Deactivation Cycles	—	Counts	This parameter displays the number of times the engine switches between V8 mode, and V4 mode during each ignition cycle. The counter will reset to zero and increment again, if the count reaches 255 during the current ignition cycle.
Cylinder 1, 4, 6, 7 Current Misfire Counter	—	Counts	This parameter displays the number of misfires detected for cylinder's 1–8 within the current 100 engine cycle test interval. The set of misfire counters for the individual cylinders are maintained such that if a single misfire is detected over an engine cycle.
Cylinder 1, 4, 6, 7 Deactivation Solenoid Valve Control Circuit High Voltage Test Status	—	OK	This parameter displays the state of the deactivation solenoid valve control circuit. The parameter displays Malfunction if the deactivation solenoid valve control circuit is shorted to voltage.
Cylinder 1, 4, 6, 7 Deactivation Solenoid Valve Control Circuit Low Voltage Test Status	—	OK	This parameter displays the state of the deactivation solenoid valve control circuit. The parameter displays Malfunction if the deactivation solenoid valve control circuit is shorted to ground.
Cylinder 1–8 History Misfire Counter	—	Counts	This parameter displays the number of misfires detected for cylinder's 1–8 since a misfire failure has been reported.
Cylinder 1–8 Injector Control Circuit Status	—	OK	This parameter displays the status of the fuel injector's 1–8 output malfunction for Short circuit from injector high side to ground or system voltage, Short circuit from injector low side to injector low side, Short circuit from injector low side to ground or system voltage, Short circuit from injector high side to low side and Injector open circuit.

Parameter	System State	Expected Value	Description
Cylinder 1–8 Injector Disabled - Misfire Detected	—	No	This parameter displays when an injector is disabled in a specific engine cylinder due to a misfire being detected.
Cylinder 1–8 Knock Detected	—	No	This parameter indicates if a knock has been detected over a calibratable sample period.
Cylinder Deactivation Cycles	—	Counts	This parameter displays the number of times the engine switches between V8 mode, and V4 mode during each ignition cycle.
Cylinder Deactivation Inhibit Reason	—	Yes/No	This parameter displays Yes if one of the following Deactivation Inhibit Reasons is detected. • Engine Coolant • Temperature Out of Range • Engine Oil Temperature Out of Range • Engine Oil Pressure Out of Range • Ignition Voltage Out of Range • Accelerator Pedal Position High • Accelerator Pedal Position Increase High • Brake Vacuum Pressure Low • Engine Manifold Vacuum Pressure Low • Engine Oil Aeration Present • Maximum Deactivation Time Exceeded • Minimum Time with All Cylinders Activated Not Met • All Cylinders Activated via Device Control • Transmission Gear Shift in Progress • Transmission Range Incorrect • Transmission Gear Incorrect • Engine Speed Out of Range • Tip In Bump Active • Vehicle Speed Too Low • In 4WD Low State • POSD Intrusive Active • AC Clutch Being Engaged • Heater Performance • Fuel Shut-Off Stability Timer Active • Decel Fuel Cutoff Active • Maximum Throttle Exceeded • Ethanol Concentration Too High • Ethanol Learn In Progress • ETC Disable Time • Catalyst Temperature Low • Displacement on Demand Solenoid Driver Fault • Vehicle Speed Fault • Intake Air Temperature Sensor Fault • Engine Coolant Temperature Sensor Fault • Engine Oil Pressure Sensor Fault • Electronic Throttle Control Reduced Engine Power Active

Parameter	System State	Expected Value	Description
			• Brake Vacuum Pressure Sensor Fault • Manifold Absolute Pressure Sensor Fault • Catalyst Converter Overtemperature Protection Active • Engine Metal Overtemperature Protection Active • Axle Torque Limiting Active (Obsolete) • Brake Torque Management Active (Obsolete) • Powertrain Relay Fault • Cam Sensor Fault • Crank Sensor Fault • Engine Misfire Detected • Invalid 4WD Low State • Torque Model Inaccurate Fault • Cylinder Deactivation System Fault • Engine Overspeed Protection Active • Hot Coolant Mode Active • Piston Protection Active
Cylinder Deactivation Performance Test	—	OK	This parameter displays OK if all the Active Fuel Management enabling conditions are met. The parameter displays Malfunction if one or more enabling conditions are out of range.
Cylinder Deactivation Performance Test	—	OK	This parameter displays if the commanded cylinder deactivation failed. This indicates that one or more cylinders failed to deactivate when commanded to do so by displacement by demand.
Cylinder Deactivation System Command	—	All Cylinder	This parameter displays several signals associated with the status of the Active Fuel Management system.
Deceleration Fuel Cut-Off	—	Inactive	This parameter displays the status of the operating mode used to turn OFF the fuel injectors during certain deceleration conditions. When the scan tool displays Active, the control module has turned OFF the fuel injectors. When the scan tool displays Inactive, the fuel system is operating normally.
Desired Camshaft Position	—	0 degrees	This parameter displays the set point for the position of the intake camshaft for bank 1 in terms of degrees of camshaft rotation (advance) from the park position.
Desired Fuel Rail Pressure	—	MPa / PSI	This parameter displays the desired fuel rail pressure at the engine.
Desired Idle Speed	—	RPM	This parameter displays the desired idle engine speed after the application of all limits and corrections.
Desired Intake Camshaft Position	—	°	This parameter displays the set point for the position of the intake camshaft for bank 1 in terms of degrees of camshaft rotation (advance) from the park position.
Desired Throttle Position	—	%	This parameter displays the desired throttle position used to control the throttle motor, which is determined from the arbitration of the various requests for the authority to control the throttle, including remedial actions.
Distance Since DTC Cleared	—	km / miles	This parameter displays the distance accumulated since an emission diagnostic trouble code was cleared. The scan tool will display increasing distance as the vehicle is driven.
Distance Since First Malfunction	—	Varies	This parameter displays the distance accumulated when the emission diagnostic trouble code first failed.

Parameter	System State	Expected Value	Description
Distance Since Last Malfunction	—	km / miles	The parameter displays the distance driven since the last engine controls malfunction.
Distance Since Last Oil Level Warning	—	km / miles	This parameter displays the distance driven since the last oil level warning.
Distance Since Last Oil Pressure Warning	—	km / miles	This parameter displays the distance driven since the last oil pressure warning.
Distance Since Recommended Maximum Fuel Alcohol Content Exceeded	—	km / miles	This parameter displays the accumulated distance driven since the most recent time that the recommended ethanol concentration was exceeded.
Distance with Cylinder Activated	—	km/miles	This parameter displays the accumulated distance driven with all of the engine's cylinders activated during the current Ignition key cycle.
Distance with Cylinder Deactivated	—	km/miles	This parameter displays the accumulated distance driven with the engine's cylinders deactivated during the current Ignition key cycle.
Drag Control Status	—	Active / Inactive	This parameter displays Active when the requested torque signal is above the driver requested value while the traction control system signal input is active.
Driver Requested Axle Torque	—	N•m	This parameter displays a (desired) output value after comparing engine load as an input to the hybrid control processor and engine control module. **Note:** Comparing this parameter to the Engine Torque Actual parameter can be useful in diagnosing a concern. The values between these 2 parameter should be similar.
Drop-Throttle Detected while Traction Control Active	—	No	This parameter displays if a drop-throttle was detected while the traction control was active.
Drop-Throttle Status	—	Inactive	This parameter displays the status of a drop-throttle.
Engine Controls Ignition Relay Feedback Signal	—	Battery Voltage	This parameter displays the voltage signal sent to the control module from the engine control ignition relay. The scan tool will display battery voltage when the engine is running. The scan tool will display no voltage when the relay is OFF.
ECM Challenge Status	—	Valid	This parameter shows the immobilizer system status of the ECM challenge. This indicates whether the currently calculated ECM challenge is valid.
ECM in Immobilizer Fail Enable	—	No	This parameter displays whether or not the engine control module (ECM) is in failure enable mode for the vehicle theft deterrent (VTD) system.
ECT Sensor	—	Varies °C/°F	This parameter displays the temperature of the engine coolant based on the input from the engine coolant temperature (ECT) sensor. When the coolant temperature is low, the scan tool will display a low temperature. When the coolant temperature is high, the scan tool will display a high temperature.
EGR/Camshaft Position Monitor Complete	—	Yes/No	This parameter displays the status of the EGR/Camshaft Position Monitor. The parameter will display Yes when the EGR/Camshaft Position Monitor is complete.
EGR/Camshaft Position Monitor Complete This Ignition Cycle	—	Yes/No	This parameter displays the status of the EGR/Camshaft Position Monitor for this Ignition Cycle. The parameter will display Yes when the EGR/Camshaft Position Monitor is complete this Ignition Cycle.
EGR/Camshaft Position Monitor Enabled	—	Yes/No	This parameter displays the status of the EGR/Camshaft Position Monitor. The parameter will display Yes when the EGR/Camshaft Position Monitor is Enabled.

Parameter	System State	Expected Value	Description
EGR/Camshaft Position Monitor Enabled This Ignition Cycle	—	Yes/No	This parameter displays the status of the EGR/ Camshaft Position Monitor for this Ignition Cycle. The parameter will display Yes when the EGR/Camshaft Position Monitor is Enabled this Ignition Cycle.
Electric Power Management Inhibit Reason	—	None	This parameter displays the reason of the Regulated Voltage Control (RVC) override command. RVC lowers system operating voltage to reduce system electrical load and improve fuel economy performance.
Engine Controls Ignition Relay Command	—	On/Off	This parameter displays the state of the control circuit for the engine control module power relay as commanded by the engine control module.
Engine Controls Ignition Relay Control Circuit High Voltage Test Status	—	OK	This parameter displays the state of the engine controls ignition relay control circuit. The parameter displays Malfunction if the engine controls ignition relay control circuit is shorted to voltage.
Engine Controls Ignition Relay Control Circuit Low Voltage Test Status	—	OK	This parameter displays the state of the engine controls ignition relay control circuit. The parameter displays Malfunction if the engine controls ignition relay control circuit is shorted to grounded.
Engine Controls Ignition Relay Control Circuit Open Test Status	—	OK	This parameter displays the state of the engine controls ignition relay control circuit. The parameter displays Malfunction if the engine controls ignition relay control circuit is open.
Engine Controls Ignition Relay Feedback Signal	—	Battery Voltage	This parameter displays the voltage of the powertrain relay feedback to the controller.
Engine Load	—	25–30%	This parameter displays the engine load in percent based on inputs to the control module from various engine sensors. The scan tool will display a low percentage when the engine is at idle with little or no load. The scan tool will display a high percentage when the engine is running at a high RPM under a heavy load.
Engine Load During Misfire History 1 - 5	—	%	This parameter displays the specific engine speed and load in which the engine was operating for one of the last five misfire events immediately prior to Misfire Test Failed This Key On (TFTKO) = True.
Engine Off Time	—	hh:mm:ss	This parameter displays the time elapsed since the engine turned OFF. The scan tool will display the time in hours, minutes and seconds. The engine OFF time will reset to zero when the engine starts.
Engine Oil Level Switch	—	OK	This parameter displays the status of the engine oil level switch as determined by the control module. The control module uses this information to turn on the low engine oil lamp if the engine oil level remains approximately 1 quart low for a sufficient amount of time. The scan tool will display Low when the engine oil level is low. The scan tool will display OK when the engine oil level is correct.
Engine Oil Life Remaining	—	%	This parameter displays the amount engine oil life remaining before requiring an oil change based on calculations by the control module. The scan tool will display lower values as the engine oil life approaches 0 miles.
Engine Oil Pressure Sensor	—	kPa/PSI	This parameter displays the actual engine oil pressure measured by a sensor.
Engine Oil Pressure Switch	—	OK	This parameter displays the state of the engine oil pressure (EOP) as determined by the control module. The control module monitors the EOP switch to determine if the EOP is sufficient. The scan tool will display low when the EOP is below a predetermined value.
Engine Oil Temperature Sensor	—	Varies °C/°F	This parameter displays the engine oil temperature.

Parameter	System State	Expected Value	Description
Engine Oil Temperature When Engine Overspeed Detected	—	Varies °C/°F	This parameter displays the engine oil temperature when the engine overspeed was detected.
Engine Overspeed	—	Not Present	This parameter displays if an engine overspeed is detected. The scan tool will display Present when an engine overspeed is detected.
Engine Run Time	—	hh:mm:ss	This parameter displays the time elapsed since the engine was started. The scan tool will display the time in hours, minutes and seconds. The engine run time will reset to zero when the engine stops running.
Engine Serial Number	—	#	This parameter displays the engine serial number.
Engine Shutdown Counter	—	Counts	This parameter displays the engine shutdown counts for specific reasons including excessive idle, high coolant temperature, low coolant level, or low oil level.
Engine Speed	—	600 RPM	This parameter displays the speed of the crankshaft as determined by the control module using an input from the CKP sensor. The scan tool will display a high value at high engine speeds and a low value at low engine speeds.
Engine Speed During Misfire History 1 - 5	—	RPM	This parameter displays the speed of the crankshaft as determined by the control module using an input from the CKP sensor at the time of engine misfire.
Engine Speed When Engine Overspeed Detected	—	RPM	This parameter displays the speed of the crankshaft as determined by the control module using an input from the CKP sensor at the time of engine overspeed.
EVAP Malfunction History	—	Varies	This parameter contains the result of the most recently completed evaporative emissions diagnostic test.
EVAP Monitor Complete	—	Yes/No	This parameter displays if the most recent evaporative emissions diagnostic test is complete.
EVAP Monitor Complete This Ignition Cycle	—	Yes/No	This parameter displays if the most recent evaporative emissions diagnostic test has completed this ignition cycle.
EVAP Monitor Enabled	—	Yes/No	This parameter displays if the evaporative emissions diagnostic test is enabled.
EVAP Monitor Enabled This Ignition Cycle	—	Yes/No	This parameter displays if the evaporative emissions diagnostic test is enabled this ignition cycle.
EVAP Purge Solenoid Valve Command	—	%	This parameter displays the on-time or duty cycle of the EVAP purge solenoid commanded by the control module expressed as a percent. The scan tool will display a high percentage when the control module is commanding the EVAP purge solenoid to be open a large amount . The scan tool will display a low percentage when the control module is commanding the EVAP purge solenoid to be open a small amount. The scan tool will display 0 when the control module is commanding the EVAP purge solenoid closed.
EVAP Purge Solenoid Valve Control Circuit High Voltage Test Status	—	OK	This parameter displays the EVAP purge solenoid valve control circuit. The parameter displays Malfunction if the EVAP purge solenoid valve circuit is shorted to voltage.
EVAP Purge Solenoid Valve Control Circuit Low Voltage Test Status	—	OK	This parameter displays the EVAP purge solenoid valve control circuit. The parameter displays Malfunction if the EVAP purge solenoid valve circuit is shorted to ground.
EVAP Purge Solenoid Valve Control Circuit Open Test Status	—	OK	This parameter displays the EVAP purge solenoid valve control circuit. The parameter displays Malfunction if the EVAP purge solenoid valve circuit is open.

Parameter	System State	Expected Value	Description
EVAP Vent Solenoid Valve Command	—	Venting	This parameter displays the state of the EVAP vent solenoid commanded by the control module. The scan tool will display venting when the control module is commanding the EVAP vent solenoid to be open. The scan tool will display a not venting when the control module is commanding the EVAP vent solenoid to be closed.
EVAP Vent Solenoid Valve Control Circuit High Voltage Test Status	—	OK	This parameter displays the EVAP vent solenoid valve control circuit. The parameter displays Malfunction if the EVAP vent solenoid valve circuit is shorted to voltage.
EVAP Vent Solenoid Valve Control Circuit Low Voltage Test Status	—	OK	This parameter displays the EVAP vent solenoid valve control circuit. The parameter displays Malfunction if the EVAP vent solenoid valve circuit is shorted to ground.
EVAP Vent Solenoid Valve Control Circuit Open Test Status	—	OK	This parameter displays the EVAP vent solenoid valve control circuit. The parameter displays Malfunction if the EVAP vent solenoid valve circuit is open.
Extended Travel Brake Pedal Position Circuit Signal	—	Applied / Released	This parameter displays that no failures have been detected in the determination of the Brake Pedal Moderate Travel Achieved signal within the platform brake sensing module as received over serial communication.
Extended Travel Brake Pedal Position Signal	—	Applied, Released, Invalid	This parameter displays the undefaulted determination of brake pedal travel beyond a moderate/extended travel threshold by the platform brake sensing module and is received over serial communication.
Extended Travel Brake Pedal Switch	—	Applied / Released	This parameter displays that no failures have been detected in the determination of the Brake Pedal Moderate Travel Achieved signal within the platform brake sensing module as received over serial communication.
Freeze Frame DTC	—	#	This parameter displays the diagnostic trouble code (DTC) that caused the freeze frame to be stored.
Fuel Alcohol Content	—	%	This parameter indicates the percentage of alcohol contained in ethanol or methanol fuels.
Fuel Alcohol Content When Recommended Maximum Fuel Alcohol Content Exceeded	—	%	This parameter displays the actual fuel alcohol percentage at the most recent time that the recommended ethanol concentration was exceeded.
Fuel Composition Learn	—	Active / Inactive	This parameter indicates if the fuel composition learn status is active.
Fuel Composition Sensor	—	Hz	This parameter displays the frequency of the fuel composition sensor.
Fuel Composition Sensor	—	Ms	This parameter displays the fuel composition sensor on time.
Fuel Consumed Since Recommended Maximum Fuel Alcohol Content Exceeded	—	Liters	This parameter displays the amount of fuel consumed since the most recent time that the recommended ethanol concentration was exceeded.
Fuel Control Loop Status	—	Closed	This parameter displays the fuel system loop status.
Fuel Economy	—	L/h	This parameter displays the instantaneous fuel consumption rate of the engine in liters per hour.
Fuel Enrichment - Hot Catalyst	—	Yes/No	This parameter displays Yes when fuel is being added to cool the catalytic converter.
Fuel Enrichment - Hot Coolant	—	Active / Inactive	This parameter displays Active when the conditions to enable hot coolant enrichment are active and that a richer than stoichiometric air/fuel ratio is being commanded in order to help cool the engine when a system malfunction is causing the engine to run at extreme temperatures.

Parameter	System State	Expected Value	Description
Fuel Level Sensor	—	0–5 Volts	This parameter displays the voltage signal received by the control module from the fuel level sensor.
Fuel Level Sensor Left Tank	—	0–5 Volts	This parameter displays the voltage signal received by the control module from the fuel level sensor for the left tank.
Fuel Level Sensor Right Tank	—	0–5 Volts	This parameter displays the voltage signal received by the control module from the fuel level sensor for the right tank.
Fuel Pressure Regulator 1 Control Circuit Command	—	On/Off	This parameter displays the commanded state of the fuel pressure regulator 1 low side output.
Fuel Pressure Regulator 1 Control Circuit High Voltage Test Status	—	OK	This parameter displays the diagnostic state of the fuel pressure regulator control circuit as determined by the control module. The scan tool will display OK, Malfunction or Not Run. The scan tool will display OK if the circuit is operating correctly.
Fuel Pressure Regulator 1 Control Circuit Low Voltage Test Status	—	OK	This parameter displays the diagnostic state of the fuel pressure regulator control circuit as determined by the control module. The scan tool will display OK, Malfunction or Not Run. The scan tool will display OK if the circuit is operating correctly.
Fuel Pressure Regulator 1 Control Circuit Open Test Status	—	OK	This parameter displays the diagnostic state of the fuel pressure regulator control circuit as determined by the control module. The scan tool will display OK, Malfunction or Not Run. The scan tool will display OK if the circuit is operating correctly.
Fuel Pressure Regulator 1 High Control Circuit Command	—	%	This parameter displays the commanded duty cycle for the fuel pressure regulator 1 solenoid output.
Fuel Pressure Regulator 1 High Control Circuit Command	—	On/Off	This parameter displays the commanded state of the fuel pressure regulator 1 high side output.
Fuel Pressure Regulator 1 High Control Circuit High Voltage Test Status	—	OK, Malfunction, Not Run	This parameter displays the state of the fuel pressure regulator circuit voltage. The parameter displays Malfunction if the fuel pressure regulator circuit voltage is shorted to voltage.
Fuel Pressure Regulator 1 High Control Circuit Low Voltage Test Status	—	OK, Malfunction, Not Run	This parameter displays the state of the fuel pressure regulator circuit voltage. The parameter displays Malfunction if the fuel pressure regulator circuit voltage is shorted to ground.
Fuel Pressure Regulator 1 High Control Circuit Open Test Status	—	OK, Malfunction, Not Run	This parameter displays the state of the fuel pressure regulator circuit voltage. The parameter displays Malfunction if the fuel pressure regulator circuit voltage is open.
Fuel Pressure Sensor	—	kPa / PSI	This parameter displays fuel rail pressure at the engine when the reading is referenced to atmosphere (gauge pressure).
Fuel Pump Enable Circuit High Voltage Test Status	—	OK	This parameter displays the state of the fuel pump enable circuit voltage. The parameter displays Malfunction if the fuel pump enable circuit voltage is shorted to voltage.
Fuel Pump Enable Circuit Low Voltage Test Status	—	OK	This parameter displays the state of the fuel pump enable circuit voltage. The parameter displays Malfunction if the fuel pump enable circuit voltage is shorted to grounded.
Fuel Pump Enable Circuit Open Test Status	—	OK	This parameter displays the state of the fuel pump enable circuit voltage. The parameter displays Malfunction if the fuel pump enable circuit voltage is open.

Parameter	System State	Expected Value	Description
Fuel Pump Enabled Command	—	On	This parameter displays the commanded state of the Fuel Pump control circuit. The fuel pump should be On when the scan tool indicates the Fuel Pump Enable command is On. The fuel pump should be OFF when the scan tool indicates the Fuel Pump Enable +-*+Command is Off.
Fuel Pump Trim	Engine Running	0–4 %	This parameter displays the adjustments for the fuel pump duty cycle control. This is calculated by comparing the estimated fuel rail pressure to the desired fuel rail pressure. If the short term fuel pump trim consistently deviates from 0, the long term fuel pump trim is adjusted accordingly.
Fuel Rail Pressure Sensor	—	Volts	This parameter displays the fuel rail pressure analog input as a percentage of its reference voltage.
Fuel System Monitor Complete	—	Yes/No	This parameter displays the enable and completion status during the current driving / monitoring cycle of each continuous legislated emission related monitor and non-continuous legislated emission related monitor.
Fuel System Monitor Complete This Ignition Cycle	—	Yes/No	This parameter displays the enable and completion status during the current driving / monitoring cycle of each continuous legislated emission related monitor and non-continuous legislated emission related monitor.
Fuel System Monitor Enabled	—	Yes/No	This parameter displays the enable and completion status during the current driving / monitoring cycle of each continuous legislated emission related monitor and non-continuous legislated emission related monitor.
Fuel System Monitor Enabled This Ignition Cycle	—	Yes/No	This parameter displays the enable and completion status during the current driving / monitoring cycle of each continuous legislated emission related monitor and non-continuous legislated emission related monitor.
Fuel Tank Pressure Sensor	—	1.5 Volts	This parameter displays the voltage signal sent to the control module from the sensor used to monitor the pressure inside the fuel tank. The scan tool will display a low voltage when the pressure in the fuel tank is high. The scan tool will display a high voltage when the pressure in the fuel tank is low or in a vacuum.
Fuel Tank Pressure Sensor	—	0 inches H2O (0 mm Hg)	This parameter displays the fuel tank pressure as calculated based on a signal sent to the control module from the fuel tank pressure (FTP) sensor. The scan tool will display a low value when the pressure in the fuel tank is low or a vacuum. The scan tool will display a high value when the pressure in the fuel tank is high.
Fuel Tank Rated Capacity	—	Varies	This parameter displays the rated maximum quantity of fuel the fuel tank will hold. This is calibrated in the control module to match the vehicle. See Owner's Manual-Capacities and Specifications.
Fuel Trim Cylinder Balance Test Bank 1 or 2	—	Active/Inactive	This parameter displays the current state of the AFIM. A value of “Active” indicates that the monitor is currently performing an evaluation of the specified bank. A value of “Inactive” indicates that the monitor is NOT currently performing an evaluation of the specified bank.
Fuel Trim Cylinder Balance Test Counter Bank 1 or 2	—	Counts	This parameter displays the number of Air Fuel Imbalance Monitor tests that have been performed since a code clear or NVM reset for bank 1 or 2.

Parameter	System State	Expected Value	Description
Fuel Trim Learn	—	Enabled	This parameter indicates if the control module is adjusting long term fuel trim in response to the short term fuel trim. The scan tool displays Enabled or Disabled. When conditions are appropriate for enabling long term fuel trim corrections, the scan tool displays Enabled.
Fuel Trim Memory Cell	—	#	This parameter displays the index of the entry within the array of long term fuel corrections that is active based upon the current operating conditions (MAP, engine speed, purge duty cycle, A/C compressor state, and transmission range).
Fuel Trim System Test State	—	Monitoring	This parameter indicates the status of the Fuel Trim System Test. The scan tool will display Disabled, Enabled, Monitoring, or Run Purge Test.
Fuel Volatility	—	Varies	This parameter indicates the rate the fuel can be vaporized in the cylinder as calculated by the control module. The scan tool displays Low, Moderate, or High. The scan tool will display High when the fuel volatility is high. The scan tool will display Low when the fuel volatility is low.
Generator F-Terminal Signal	—	%	This parameter displays the filtered generator F-terminal duty cycle.
Generator Indicator Command	—	On/Off	This parameter displays signals associated with the status of the generator.
Generator L-Terminal Circuit High Voltage Test Status	—	OK	This parameter displays the state of the generator l-terminal circuit voltage. The parameter displays Malfunction if the generator l-terminal circuit voltage is shorted to voltage.
Generator L-Terminal Circuit Low Voltage Test Status	—	OK	This parameter displays the state of the generator l-terminal circuit voltage. The parameter displays Malfunction if the generator l-terminal circuit voltage is shorted to ground.
Generator L-Terminal Circuit Open Test Status	—	OK	This parameter displays the state of the generator l-terminal circuit voltage. The parameter displays Malfunction if the generator l-terminal circuit voltage is open.
Generator L-Terminal Command	—	%	This parameter displays the commanded state of generator L-terminal duty cycle in percentage.
Generator L-Terminal Signal Command	—	On/Off	This parameter displays the commanded state of the generator L-terminal output
Heated Catalyst Monitor Complete	—	Yes	This parameter indicates the status of the heated catalyst. The scan tool displays Yes when the diagnostic is complete. And No if the diagnostic has not ran or a malfunction is detected in the heated catalyst.
Heated Catalyst Monitor Enabled	—	Yes	This parameter indicates the status of the heated catalyst monitor diagnostic. Catalyst Monitor Test Running indicates Yes or No when the heated catalyst monitor diagnostic is actively running a test.
HO2S Bank 1 or 2 Sensor 1 or Sensor 2	—	Volts	This parameter indicates the heated oxygen sensor (HO2S) bank 1 or bank 2, sensor 1 output voltage as measured by the control module. The scan tool value fluctuates constantly while operating in Closed Loop. The scan tool will display a higher value during rich running conditions, and a lower value during leaner running conditions.

Parameter	System State	Expected Value	Description
HO2S Heater Bank 1 or 2 Sensor 1 or 2	—	mA	This parameter displays the current through the control module when the bank 1 or bank 2, sensor 1 HO2S heater is commanded ON by the control module. HO2S Heater Bank 1 Sen. 1 is a range of values indicating a low current when the heater circuit resistance is high to a high current when the heater circuit resistance is low.
HO2S Heater Command Bank 1 - 2 Sensor 1 - 2	—	0–99%	This parameter displays the commanded state of the Bank 1 Sensor 2 heater by the control module. The scan tool will display a higher value as the heater command is increased, and a lower value if the heater is not commanded ON.
HO2S Heater Command Bank 1 - 2 Sensor 1 - 2	—	On/Off	This parameter displays the commanded state of the Bank 1 Sensor 2 heater by the control module. The scan tool will display ON if the heater is commanded on.
HO2S Heater Control Circuit High Voltage Test Status Bank 1 - 2 Sensor 1 - 2	—	OK	This parameter displays the state of the HO2S heater control circuit. The parameter displays Malfunction if the HO2S heater control circuit is shorted to voltage.
HO2S Heater Control Circuit Low Voltage Test Status Bank 1 - 2 Sensor 1 - 2	—	OK	This parameter displays the state of the HO2S heater control circuit. The parameter displays Malfunction if the HO2S heater control circuit is shorted to ground.
HO2S Heater Control Circuit Open Test Status Bank 1 - 2 Sensor 1 - 2	—	OK	This parameter displays the state of the HO2S heater control circuit. The parameter displays Malfunction if the HO2S heater control circuit is shorted to open.
HO2S Heater Monitor Complete	—	Yes/No	This parameter displays the enable and completion status during the current driving / monitoring cycle of each continuous legislated emission related monitor and non-continuous legislated emission related monitor.
HO2S Heater Monitor Complete This Ignition Cycle	—	Yes/No	This parameter displays the enable and completion status during the current driving / monitoring cycle of each continuous legislated emission related monitor and non-continuous legislated emission related monitor.
HO2S Heater Monitor Enabled	—	Yes/No	This parameter displays the enable and completion status during the current driving / monitoring cycle of each continuous legislated emission related monitor and non-continuous legislated emission related monitor.
HO2S Heater Monitor Enabled This Ignition Cycle	—	Yes/No	This parameter displays the enable and completion status during the current driving / monitoring cycle of each continuous legislated emission related monitor and non-continuous legislated emission related monitor.
IAT Sensor	—	Varies °C/°F	This parameter displays the temperature of the air entering the engine as calculated by the control module based on the input from the intake air temperature (IAT) sensor. The scan tool will display a low value when the air temperature is low, and a high value when the air temperature is high.
Ignition Accessory Signal	—	On	This parameter displays the state of the ignition 0 input to the control module from the ignition switch. The scan tool will display ON when the ignition switch is in the ignition accessory position. The scan tool will display OFF when the ignition switch is in any other position.
Ignition Coil 1 - 8 Control Circuit High Voltage Test Status	—	OK	This parameter displays the state of the ignition coil control circuit voltage. The parameter displays Malfunction if the ignition coil control circuit voltage is shorted to voltage.

Parameter	System State	Expected Value	Description
Ignition Coil 1 - 8 Control Circuit Low Voltage Test Status	—	OK	This parameter displays the state of the ignition coil control circuit voltage. The parameter displays Malfunction if the ignition coil control circuit voltage is shorted to ground.
Ignition Coil 1 - 8 Control Circuit Open Test Status	—	OK	This parameter displays the state of the ignition coil control circuit voltage. The parameter displays Malfunction if the ignition coil control circuit voltage is open.
Ignition Coil Supply Voltage Bank 1 - 2	—	On/Off	This parameter displays indicates that the feedback hardwire input to the controller for the ignition module power supply is active on the bank containing cylinder 1 or 2.
Ignition Cycles Since Recommended Maximum Fuel Alcohol Content Exceeded	—	Counts	This parameter displays the number of ignitions cycles since the most recent time that the recommended ethanol concentration was exceeded.
Ignition Cycles with Malfunction Since 1st Malfunction	—	Counts	This parameter displays the number of ignition cycles with a failure reported since the first ignition cycle with a failure reported.
Ignition Cycles without Completed Test Since 1st Malfunction	—	Counts	This parameter displays the number of ignition cycles without a pass or a failure reported since the first ignition cycle with a failure reported.
Ignition Cycles without Malfunction Since Last Malfunction	—	Counts	This parameter displays the number of ignition cycles with a pass reported and no failures reported since the first ignition cycle with a failure reported.
Ignition Timing	—	°	This parameter displays the final spark advance in terms of crankshaft angle.
Ignition 1 Signal	—	Battery Voltage	This parameter displays the voltage measured at the ignition 1 circuit of the control module. Voltage is applied to the control module when the ignition switch is in the ignition 1 position. The scan tool will display a low value when the voltage is low. The scan tool will display a high value, such as battery voltage, when the voltage is higher.
Immobilizer Auto Learn Counter	—	Counts	The scan tool displays the count value when using the 30-minute reprogramming procedure. Three 10-minute cycles, or three counts, are required to complete the 30-minute auto learn reprogramming procedure.
Immobilizer Automatic Learn Timer	—	hh:mm:ss	This parameter indicates that either the auto learn timer (used in the auto learn procedure to enable VTD password learning) or the seed and key timer (used in the seed and key procedure to enable VTD password learning) is active.
Immobilizer Automatic Learn Timer	—	Inactive	This parameter indicates that either the auto learn timer (used in the auto learn procedure to enable immobilizer password learning) or the seed and key timer (used in the seed and key procedure to enable immobilizer password learning) is active.
Immobilizer Fuel Disable	—	Inactive	This parameter indicates the immobilizer system has disabled fuel.
Immobilizer Fuel Disable Until Ignition Off	—	Inactive	The parameter indicates the immobilizer system has disabled fuel for the remainder of the ignition cycle.
Immobilizer Fuel Enable	—	Yes	This parameter indicates the immobilizer system has enabled fuel.
Immobilizer Password Learn	—	Yes/No	This parameter indicates that the security password has been learned.
Immobilizer Password Learn Scan Tool Delay	—	Active / Inactive	This parameter indicates that the security code has been accepted but the scan tool delay is active.
Immobilizer Security Code Accepted	—	Yes/No	This parameter indicates that the received immobilizer system security code is correct.

Parameter	System State	Expected Value	Description
Immobilizer Security Code Function	—	Present / Not Present	This parameter indicates if the ECU supports the immobilizer security code strategy
Immobilizer Security Code Lockout	—	Active / Inactive	This parameter displays Active or Inactive. Security Code Lockout Active indicates that the security code has not passed and lockout is active.
Immobilizer Security Code Lockout Active Timer	—	ms	This parameter displays the time elapsed since the immobilizer security code lockout has been activated either due to a battery disconnect or an incorrect immobilizer security code being entered.
Immobilizer Security Code Programmed	—	Yes/No	This parameter indicates if the immobilizer system security code has been programmed.
Immobilizer Security Code Programming Counter	—	Counts	This parameter displays the number of times a new immobilizer security code has been programmed through secure access.
Immobilizer Security Code Reset Counter	—	Counts	This parameter displays the number of times the immobilizer security code has been reset to the default value through secure access.
Immobilizer System Status	—	Varies	This parameter displays the current state of the immobilizer algorithm.
Immobilizer Valid Response Received Time	—	ms	This parameter displays the actual time observed for a valid immobilizer response.
Initialized Fuel Alcohol Content	—	%	This parameter displays the initialized fuel composition to be used as a starting point for the fuel composition algorithm.
Injector Duty Cycle Bank 1 or 2	—	ms	This parameter displays the fuel injector pulse width (on-time) commanded to each cylinder on bank 1 or 2.
Inspection/Maintenance Drive Cycle Complete	—	Yes/No	This parameter displays that all required components of the standard drive cycle have completed.
Inspection/Maintenance Drive Cycle Idle Time Complete	—	Yes/No	This parameter displays that the internal combustion engine (ICE) idle time requirement is complete.
Inspection/Maintenance Drive Cycle Idle Timer	—	hh:mm:ss	This parameter displays the accumulated amount of contiguous time after the first internal combustion engine (ICE) start in which both pedal position and vehicle speed are zero.
Inspection/Maintenance Drive Cycle Propulsion System Active Time Complete	—	Yes/No	This parameter displays that the vehicle propulsion system has been active for the required amount of time.
Inspection/Maintenance Drive Cycle Vehicle Speed Time Complete	—	Yes/No	This parameter displays that the vehicle speed or load has been above a calibratable threshold for five minutes.
Inspection/Maintenance Drive Cycle Vehicle Speed Timer	—	hh:mm:ss	This parameter displays the total accumulated time in which the vehicle speed has been > 25 mph or the load has been above a calibratable threshold after the 1st time the internal combustion engine (ICE) is started each key on.
Intake Air Humidity Sensor	—	%	This parameter displays the raw duty cycle signal from the relative humidity sensor electronics, which represents the relative humidity of the intake air.
Intake Camshaft Position	—	°	This parameter displays the position of the intake camshaft for bank 1 in terms of degrees of camshaft rotation (advance) from the park position (a value of zero represents the park position).
Intake Camshaft Position Active Counter	—	Counts	This parameter displays a rolling count of the number of intake cam position sensor pulses for bank 1.
Intake Camshaft Position Actuator Solenoid Valve Control Circuit High Voltage Test Status	—	OK	This parameter displays the state of the camshaft position actuator solenoid control circuit voltage. The parameter displays Malfunction if the camshaft position actuator solenoid control circuit voltage is shorted to voltage.

Parameter	System State	Expected Value	Description
Intake Camshaft Position Actuator Solenoid Valve Control Circuit Low Voltage Test Status	—	OK	This parameter displays the state of the camshaft position actuator solenoid control circuit voltage. The parameter displays Malfunction if the camshaft position actuator solenoid control circuit voltage is shorted to ground.
Intake Camshaft Position Actuator Solenoid Valve Control Circuit Open Test Status	—	OK	This parameter displays the state of the camshaft position actuator solenoid control circuit voltage. The parameter displays Malfunction if the camshaft position actuator solenoid control circuit voltage is open.
Intake Camshaft Position Command	—	%	This parameter displays the commanded duty cycle for the intake cam phase output for bank 1.
Intake Camshaft Position Variance	—	°	This parameter displays the absolute difference between the desired and actual positions of the intake camshaft for bank 1 in terms of degrees of camshaft rotation.
Intake Manifold Pressure	—	70–75 kPa / 10–11 PSI	This parameter displays the pressure difference between the MAP and the barometric pressure (BARO) as calculated by the control module. The scan tool will display a higher value during high vacuum conditions, such as idle or deceleration. The scan tool will display a lower value during low vacuum conditions, such as wide open throttle or low load cruising.
Knock Retard	—	°	This parameter indicates the amount of spark advance the control module removes from the ignition control (IC) spark advance in response to the signal from the knock sensors. The scan tool displays a high value for a large amount of spark retard, and a low value for a small amount of spark retard.
Long Term Fuel Trim Bank 1 or Bank 2	—	0% ± 10%	This parameter is calculated by the control module based on the Short Term FT value. The Long Term FT bank 1 is used for the long term correction of the fuel delivery in bank or bank 2. The scan tool will a high value for a large amount of long term fuel correction, and 0 percent for no long term fuel trim correction. The scan tool will display a negative value when fuel system is running too rich and fuel is being removed from the combustion event. The scan tool will display a positive value if the fuel system is running lean and fuel is being added to the combustion event.
Long Term Fuel Trim Average Bank 1 or Bank 2	—	1%	This parameter is calculated by the control module based on an intrusive test by the control module. The Long Term FT test average used for the long term correction of the fuel delivery in each bank. The scan tool will a high value for a large amount of long term fuel correction, and 0 percent for no long term fuel trim correction. The scan tool will display a negative value when fuel system is running too rich and fuel is being removed from the combustion event. The scan tool will display a positive value if the fuel system is running lean and fuel is being added to the combustion event.
Long Term Fuel Trim Average Bank 1 or Bank 2 without Purge	—	%	This parameter is calculated by the control module based on the Short Term FT value. The Long Term FT bank 1 is used for the long term correction of the fuel delivery in bank 1. The scan tool will display a high value for a large amount of long term fuel correction, and 0 percent for no long term fuel trim correction. The scan tool will display a negative value when fuel system is running too rich and fuel is being removed from the combustion event. The scan tool will display a positive value if the fuel system is running lean and fuel is being added to the combustion event.

Parameter	System State	Expected Value	Description
Long Term Fuel Trim Test Average Bank 1	—	%	This parameter displays the filtered long term closed loop fuel correction for bank 1 (accumulated while the excess purge vapor test is inhibited), which is filtered using a first-order lag filter, also known as an exponentially weighted moving average (EWMA). This value is compared to thresholds to determine if the fuel adjustment system diagnostic is passing or failing or if an excess purge vapor test should be executed.
Long Term Fuel Trim Test Average Bank 2	—	%	This parameter displays the filtered long term closed loop fuel correction for bank 2 (accumulated while the excess purge vapor test is inhibited), which is filtered using a first-order lag filter, also known as an exponentially weighted moving average (EWMA). This value is compared to thresholds to determine if the fuel adjustment system diagnostic is passing or failing or if an excess purge vapor test should be executed.
Long Term Fuel Trim Test Average without Purge Bank 1	—	%	This parameter displays the filtered non purge long term closed loop fuel correction for bank 1 (accumulated while purge is off), which is filtered using a first-order lag filter, also known as an exponentially weighted moving average (EWMA). This value is compared to thresholds to determine if the fuel adjustment system diagnostic is passing, failing, or indeterminate during normal purge-off operation as well as during the intrusive excess purge vapor test.
Long Term Fuel Trim Test Average without Purge Bank 2	—	%	This parameter displays the filtered non purge long term closed loop fuel correction for bank 2 (accumulated while purge is off), which is filtered using a first-order lag filter, also known as an exponentially weighted moving average (EWMA). This value is compared to thresholds to determine if the fuel adjustment system diagnostic is passing, failing, or indeterminate during normal purge-off operation as well as during the intrusive excess purge vapor test.
Low Engine Oil Level Indicator Command	—	On/Off	This parameter displays that the low engine oil level indication is being requested on over serial communication in order to inform the driver of a low engine oil level condition.
Low Engine Oil Pressure Indicator Command	—	On/Off	This parameter displays that the change engine oil indication is being requested on over serial communication in order to inform the driver that the engine oil needs to be changed. This signal is based upon either the engine oil life algorithm or the engine oil condition sensor.
MAF Performance Test	—	OK	This parameter displays the status of the mass air flow (MAF) performance test by the control module. The scan tool will display OK if no Malfunction is found. The scan tool will display Malfunction if the control module detects a Malfunction during the test.
MAF Sensor	Engine Idling	3.4–6.5 g/s	This parameter indicates the quantity calculated by the control module based on a signal from the MAF sensor. The scan tool will display a high value at high engine speeds, and a low value at low engine speeds.
MAF Sensor	—	1510–3224 Hz	This parameter indicates the frequency signal received from the MAF sensor by the control module. The scan tool will display a high value at high engine speeds, and a low value at low engine speeds.
MAF Sensor Supply Voltage Command	—	On/Off	This parameter displays the commanded state of the mass air flow sensor supply voltage output.
MAF Sensor Supply Voltage Control Circuit High Voltage Test Status	—	OK	This parameter displays the state of the mass air flow supply voltage control circuit. The parameter displays Malfunction if the mass air flow supply voltage control circuit is shorted to voltage.

Parameter	System State	Expected Value	Description
MAF Sensor Supply Voltage Control Circuit Low Voltage Test Status	—	OK	This parameter displays the state of the mass air flow supply voltage control circuit. The parameter displays Malfunction if the mass air flow supply voltage control circuit is shorted to ground.
MAF Sensor Supply Voltage Control Circuit Open Test Status	—	OK	This parameter displays the state of the mass air flow supply voltage control circuit. The parameter displays Malfunction if the mass air flow supply voltage control circuit is open.
MAF When Engine Overspeed Detected	—	g/s	This parameter indicates the quantity calculated by the control module based on a signal from the MAF sensor at the time an overspeed was detected.
MAP Performance Test 1	—	OK	This parameter displays the status of the MAP performance test 1 by the control module. The scan tool will display OK if no Malfunction is found. The scan tool will display Malfunction if the control module detects a Malfunction during the test.
MAP Performance Test 2	—	OK	This parameter displays the status of the MAP performance test 2 by the control module. The scan tool will display OK if no Malfunction is found. The scan tool will display Malfunction if the control module detects a Malfunction during the test.
MAP Sensor	—	30–38 kPa / 4–6 PSI	This parameter indicates the manifold absolute pressure inside the engine as calculated by the control module based on the signal from the MAP sensor. The scan tool will display a higher value wide open throttle, and a lower value at idle.
MAP Sensor	—	0.75–1.40 Volts	This parameter indicates the voltage signal received by the control module from the MAP sensor. The scan tool displays a low voltage at idle, and a high voltage at wide open throttle. Barometric pressure and altitude can effect these values.
Maximum Engine Speed When Engine Overspeed Detected	—	RPM	This parameter displays the engine peak speed when the overspeed condition was observed.
Malfunction Indicator Lamp (MIL) Command	—	Off	This parameter displays the commanded state of the MIL control circuit. The MIL should be ON when the scan tool indicates the MIL Command is ON. The malfunction indicator lamp should be OFF when the scan tool indicates the MIL Command is OFF. The control module will command the MIL ON when the ignition is ON with the engine OFF in order to perform a bulb check.
MIL Control Circuit High Voltage Test Status	—	OK	This parameter displays the state of the malfunction indicator lamp voltage control circuit. The parameter displays Malfunction if the malfunction indicator lamp voltage control circuit is shorted to voltage.
MIL Control Circuit Low Voltage Test Status	—	OK	This parameter displays the state of the malfunction indicator lamp voltage control circuit. The parameter displays Malfunction if the malfunction indicator lamp voltage control circuit is shorted to ground.
MIL Control Circuit Open Test Status	—	OK	This parameter displays the state of the malfunction indicator lamp voltage control circuit. The parameter displays Malfunction if the malfunction indicator lamp voltage control circuit is open.
MIL Requested	—	Yes/No	This parameter displays the commanded state of the malfunction indicator lamp (MIL) output.
MIL Requested by DTC	—	No	This parameter indicates the reason the control module illuminated the MIL. The scan tool will display YES when the MIL is requested as a result of an A or B type DTC. The scan tool will display NO if the MIL is illuminated for another reason, such as transmission DTCs.

Parameter	System State	Expected Value	Description
Misfire Diagnostic Engine Load	—	%	This parameter displays the engine load used within the misfire diagnostic (calculated as the ratio of the mass of air predicted to be in the cylinder two firing events into the future to the maximum possible mass of air in the cylinder based on the current ambient air pressure and charge temperature).
Misfire Diagnostic Engine Speed	—	RPM	This parameter displays the engine speed used within the misfire diagnostic. This engine speed is the maximum engine speed observed over the previous engine cycle.
Misfire Monitor Complete	—	Yes/No	This parameter displays the status of the catalyst monitor diagnostic. Multiple tests may run before the diagnostic reports a Pass or Fail. When a determination has been made, the diagnostic is complete for the current trip and will not attempt any further tests.
Misfire Monitor Complete This Ignition Cycle	—	Yes/No	This parameter displays the status of the catalyst monitor diagnostic. Multiple tests may run before the diagnostic reports a Pass or Fail. When a determination has been made, the diagnostic is complete for the current trip and will not attempt any further tests.
Misfire Monitor Enabled	—	Yes/No	This parameter displays the status of the catalyst monitor diagnostic. Multiple tests may run before the diagnostic reports a Pass or Fail. When a determination has been made, the diagnostic is complete for the current trip and will not attempt any further tests.
Misfire Monitor Enabled This Ignition Cycle	—	Yes/No	This parameter displays the status of the catalyst monitor diagnostic. Multiple tests may run before the diagnostic reports a Pass or Fail. When a determination has been made, the diagnostic is complete for the current trip and will not attempt any further tests.
O2S/HO2S Monitor Complete	—	Yes/No	This parameter displays the status of the catalyst monitor diagnostic. Multiple tests may run before the diagnostic reports a Pass or Fail. When a determination has been made, the diagnostic is complete for the current trip and will not attempt any further tests.
O2S/HO2S Monitor Complete This Ignition Cycle	—	Yes/No	This parameter displays the status of the catalyst monitor diagnostic. Multiple tests may run before the diagnostic reports a Pass or Fail. When a determination has been made, the diagnostic is complete for the current trip and will not attempt any further tests.
O2S/HO2S Monitor Enabled	—	Yes/No	This parameter displays the status of the catalyst monitor diagnostic. Multiple tests may run before the diagnostic reports a Pass or Fail. When a determination has been made, the diagnostic is complete for the current trip and will not attempt any further tests.
O2S/HO2S Monitor Enabled This Ignition Cycle	—	Yes/No	This parameter displays the status of the catalyst monitor diagnostic. Multiple tests may run before the diagnostic reports a Pass or Fail. When a determination has been made, the diagnostic is complete for the current trip and will not attempt any further tests.
Oil Level Warning Counter City	—	Counts	This parameter displays a rolling count of oil level debounce events for the city calibration.
Oil Level Warning Counter Country Road	—	Counts	This parameter displays a rolling count of oil level debounce events for the country road calibration.
Oil Level Warning Counter Highway	—	Counts	This parameter displays a rolling count of oil level debounce events for the highway calibration.

Parameter	System State	Expected Value	Description
Output Shaft Speed Sensor	—	0.00 RPM	This parameter displays the transmission output speed measured by the transmission output speed (TOS) sensor.
Park/Neutral Position Switch	—	Park	This parameter indicates the range selection of the automatic transmission as calculated by the control module based on input from the PNP switch. The scan tool will display, In Gear, Park, or Neutral depending on the PNP switch position.
Power Enrichment	—	Inactive	This parameter indicates if the control module has detected conditions appropriate to operate in Power Enrichment mode. The scan tool will display Active if the mode is in operation, and Inactive if the mode is not in operation. The control module enters Open Loop operation and increases injector pulse width when in power enrichment mode.
Power Mode	—	Off/ Accessory/Run/ Crank	This parameter displays the state of the system power mode. This signal is based upon the state of the system power mode received over serial communication from the platform electronics.
Recommended Maximum Fuel Alcohol Content Exceeded	—	No	This parameter displays that the fuel alcohol percentage has exceeded the recommended value for vehicle conditions.
Recommended Maximum Fuel Alcohol Content When Recommended Maximum Fuel Alcohol Content Exceeded	—	%	This parameter displays the recommended fuel alcohol percentage for vehicle conditions at the most recent time that the recommended ethanol concentration was exceeded.
Reduced Engine Power	—	Inactive	This parameter indicates if the control module has detected that a TAC system Malfunction has occurred. The scan tool will display Active if the mode is in operation, and Inactive if the mode is not in operation. The control module limits engine power when this mode is Active.
Reduced Engine Power History	—	Varies	This parameter displays the last reason that powertrain has illuminated the Reduced Engine Power (REP) indication.
Refueling Events Since Recommended Maximum Fuel Alcohol Content Exceeded	—	Counts	This parameter displays the number of times the vehicle has been refueled since the most recent time that the recommended ethanol concentration was exceeded.
Remaining Fuel in Tank	—	%	This parameter displays the total fuel level as a percentage of the rated capacity of the fuel tank(s).
Remaining Fuel in Tank	—	Liters	This parameter displays the total fuel volume contained in the fuel tank(s).
Remote Vehicle Start Disable History 1–8	—	Varies	This parameter displays one of the last eight reasons that powertrain has disabled remote vehicle start (RVS).
Remote Vehicle Start Request Signal	—	Off	This parameter displays the state of the remote vehicle start request signal. The scan tool displays ON when a remote start signal is requested.
Reverse Inhibit Solenoid Actuator Command	—	Allowed/Inhibit	Reverse Inhibit Active indicates that the driver is inhibited from shifting into reverse.
Reverse Inhibit Solenoid Actuator Control Circuit High Voltage Test Status	—	OK	This parameter displays the state of the reverse inhibit solenoid actuator control circuit. The parameter displays Malfunction if the reverse inhibit solenoid actuator control circuit is shorted to voltage.
Reverse Inhibit Solenoid Actuator Control Circuit Low Voltage Test Status	—	OK	This parameter displays the state of the reverse inhibit solenoid actuator control circuit. The parameter displays Malfunction if the reverse inhibit solenoid actuator control circuit is shorted to ground.

Parameter	System State	Expected Value	Description
Reverse Inhibit Solenoid Actuator Control Circuit Open Test Status	—	OK	This parameter displays the state of the reverse inhibit solenoid actuator control circuit. The parameter displays Malfunction if the reverse inhibit solenoid actuator control circuit is open.
Secondary Air Injection Monitor Complete	—	Yes	This parameter displays the status of the secondary air injection monitor. The parameter will display Yes when the secondary air injection monitor is complete.
Secondary Air Injection Monitor Enabled	—	Yes	The scan tool displays Yes when the secondary air injection monitor is enabled. If the scan tool displays No, this could indicate a malfunction in the secondary air injection monitor circuit.
Short Term Fuel Trim Bank 1 or Bank 2	—	0% ± 10%	This parameter displays the short term correction to fuel delivery for bank 1 or bank 2 by the control module in response to the amount of time the oxygen sensor voltage spends above or below the 450 mV threshold. The scan tool will display 0 percent if no adjustments are required. The scan tool will display a higher positive value if fuel has to be added, and a higher negative value if fuel has to be removed.
Skip Shift Indicator Command	—	Off	This parameter indicates that the transmission skip shift indicator is being requested On over serial communication in order to inform the driver that shifting up to one of the next highest hears is inhibited.
Skip Shift Solenoid Actuator Command	—	Disabled	This parameter indicates that the skip shift solenoid is commanded On, inhibiting the driver from shifting up to one of the next highest gears.
Skip Shift Solenoid Actuator Control Circuit High Voltage Test Status	—	OK	This parameter displays the state of the skip shift solenoid actuator control circuit. The parameter displays Malfunction if the skip shift solenoid actuator control circuit is shorted to voltage.
Skip Shift Solenoid Actuator Control Circuit Low Voltage Test Status	—	OK	This parameter displays the state of the skip shift solenoid actuator control circuit. The parameter displays Malfunction if the skip shift solenoid actuator control circuit is shorted to ground.
Skip Shift Solenoid Actuator Control Circuit Open Test Status	—	OK	This parameter displays the state of the skip shift solenoid actuator control circuit. The parameter displays Malfunction if the skip shift solenoid actuator control circuit is open.
Specific Humidity	—	%	This parameter displays the ratio of water vapor to dry air shown in a percentage.
Short Term Fuel Trim Test Average Bank 1 or Bank 2	—	3%	This parameter is calculated by the control module based on an intrusive test by the control module. The Short Term FT Test Average used for the short term correction of the fuel delivery in each bank. The scan tool will display a high value for a large amount of short term fuel correction, and 0% for no short term fuel trim correction. The scan tool will display a negative value when fuel system is running too rich and fuel is being removed from the combustion event. The scan tool will display a positive value if the fuel system is running lean and fuel is being added to the combustion event.
Start Up ECT	—	Varies °C/°F	This parameter Indicates the engine coolant temperature at engine start up as calculated by the control module based on the signal from the ECT sensor. The scan tool will display a higher value on a warmer engine, and a lower value on a colder engine.
Start Up IAT	—	Varies °C/°F	This parameter Indicates the intake air temperature at engine start up as calculated by the control module based on the signal from the IAT sensor. The scan tool will display a higher value during warmer under hood temperatures, and a lower value during colder under hood temperatures.

Parameter	System State	Expected Value	Description
Starter Relay Command	—	Off	This parameter displays the current starter relay command. The scan tool displays ON when the starter relay is commanded on.
Starter Relay Control Circuit High Voltage Test Status	—	OK	This parameter displays the state of the starter relay control circuit. The parameter displays Malfunction if the starter relay control circuit is shorted to voltage.
Starter Relay Control Circuit Low Voltage Test Status	—	OK	This parameter displays the state of the starter relay control circuit. The parameter displays Malfunction if the starter relay control circuit is shorted to ground.
Starter Relay Control Circuit Open Test Status	—	OK	This parameter displays the state of the starter relay control circuit. The parameter displays Malfunction if the starter relay control circuit is shorted to open.
TAC Forced Engine Shutdown	—	No	This parameter indicates the status of TAC control by the control module. The scan tool will display YES if the engine has been shut down due to a throttle control Malfunction. The scan tool will display NO if the engine has not been shut down by a throttle control Malfunction.
TAC Motor	—	Enabled	This parameter indicates the status of the TAC motor driver by the ECM. The scan tool will display Enabled if TAC motor operation is allowed. The scan tool will display disabled if the TAC motor is disabled.
TAC Motor Command	—	15–25%	This parameter indicates the required duty cycle to maintain a desired throttle position. The scan tool will display a higher value if more effort is required to move the throttle to the desired position, such as physical resistance. The scan tool will display a lower value if less effort is required to move the throttle to the desired position.
TCC/Cruise Control Brake Pedal Switch	—	Applied / Released	This parameter displays the status of the brake pedal system
Throttle Body Idle Air Flow Compensation	—	%	This parameter displays the percent compensation of the learned airflow variation algorithm. This value indicates the current amount of airflow compensation in response to engine intake airflow restrictions.
Throttle Position	—	%	This displays the throttle position resulting directly from the arbitration of the (corrected) throttle position sensors.
Throttle Position Performance Test	—	OK	This parameter displays the status of the Throttle Position performance test by the control module. The scan tool will display OK if no Malfunction is found. The scan tool will display Malfunction if the control module detects a Malfunction during the test.
Throttle Position Sensor 1	—	4.1–4.5 Volts	This parameter displays the voltage signal sent to the control module from Throttle Position sensor 1 of the throttle assembly. The Throttle Position sensor 1 is a range of values indicating a high voltage when the throttle is closed to a low voltage when the throttle plate is fully open.
Throttle Position Sensor 1 Position	—	8%	This parameter displays the angle of the throttle position (Throttle Position) sensor 1 as calculated by the control module using the signal from the Throttle Position sensor 1. The Throttle Position sensor 1 is a range of values indicating a low percentage when the throttle is closed to a high percentage when the throttle is fully open.
Throttle Position Sensor 1 Learned Minimum	—	0-0.6 Volts	This parameter displays the learned minimum value of throttle position (Throttle Position) sensor 1 as recorded by the control module during the last learn procedure.

Parameter	System State	Expected Value	Description
Throttle Position Sensor 2	—	0.5–0.8 Volts	This parameter displays the voltage signal sent to the control module from Throttle Position sensor 2 of the throttle assembly. The Throttle Position sensor 2 is a range of values indicating a low voltage when the throttle is closed to a high voltage when the throttle plate is fully open.
Throttle Position Sensor 2 Position	—	4%	This parameter displays the angle of the Throttle Position sensor 2 as calculated by the control module using the signal from the Throttle Position sensor 2. The Throttle Position sensor 2 is a range of values indicating a low percentage when the throttle is closed to a high percentage when the throttle is fully open.
Throttle Position Sensor 2 Learned Minimum	—	5.0-3.7 Volts	This parameter displays the learned minimum value of throttle position (Throttle Position) sensor 2 as recorded by the control module during the last learn procedure.
Throttle Position Sensors 1 and 2	—	Agree	This parameter displays the results of a control module test that compares the signals from the Throttle Position sensors 1 and 2 . The scan tool will display Agree or Disagree. Agree indicates that Throttle Position sensor 1 and Throttle Position sensor 2 voltages correspond to the same throttle position. Disagree indicates that Throttle Position sensor 1 and Throttle Position sensor 2 voltages correspond to different throttle positions.
Tire Size	—	Rev/km	This parameter displays the vehicle tire circumfer-ence in centimeters.
Torque Delivered Signal	—	Varies lbs ft N•m	This parameter displays the PWM signal which indicates the percent of available torque the engine is delivering to the drive wheels. The EBTCM monitors the Traction Control Torque signal to ensure that the PCM is responding properly to the Traction Control Desired Torque signal.
Torque Management Ignition Timing Retard	—	0°	This parameter indicates how much the ignition spark timing is being retarded to control torque by the control module. The scan tool will display a higher value under extreme torque control conditions such as spinning wheels. The scan tool will display a lower value under low torque control conditions such as light driving.
Torque Management Spark Retard	—	0°	This parameter indicates how much the ignition spark timing is being retarded to control torque by the control module. The scan tool will display a higher value under extreme torque control conditions such as spinning wheels. The scan tool will display a lower value under low torque control conditions such as light driving.
Torque Request Inhibit Fuel	—	No	This parameter displays the reason the ECM would be causing the transmission torque request to be limited, and if the condition is currently present.
Torque Request Inhibit - Ignition Timing	—	No	This parameter indicates if the transmission torque request is limited due to ignition timing.
Torque Request Inhibit Minimum Idle Inhibit	—	No	This parameter displays the reason the ECM would be causing the transmission torque request to be limited, and if the condition is currently present.
Torque Request Inhibit Minimum Torque	—	No	This parameter displays the reason the ECM would be causing the transmission torque request to be limited, and if the condition is currently present.
Torque Request Inhibit Spark	—	No	This parameter displays the reason the ECM would be causing the transmission torque request to be limited, and if the condition is currently present.
Torque Request Inhibit Spark Advance	—	No	This parameter displays the reason the ECM would be causing the transmission torque request to be limited, and if the condition is currently present.

Parameter	System State	Expected Value	Description
Torque Request Inhibit TAC	—	No	This parameter displays the reason the ECM would be causing the transmission torque request to be limited, and if the condition is currently present.
Torque Request Inhibit TAC Limit	—	No	This parameter displays the reason the ECM would be causing the transmission torque request to be limited, and if the condition is currently present.
Total Engine Overspeed Time	—	ms	This parameter displays the total duration of the engine overspeed time in milliseconds.
Total Knock Retard	—	0°	This parameter indicates how much ignition spark timing is being retarded due to all control systems monitored by the control module. The scan tool will display a high value during extreme conditions such as high temperatures and antilock braking. The scan tool will display a lower value during lighter driving conditions.
Total Misfire	—	0	This parameter displays the number of possible misfires during the last 200 cylinder firing events detected on all cylinders as calculated by the control module. The misfires are calculated based on engine crankshaft rotation speed variations. The scan tool displays an incrementing counter.
Traction Control Status	—	Inactive	This parameter displays when the traction control system (TCS) is activated.
Transfer Case Gear Ratio (If Equipped)	—	1	This parameter displays the estimated transfer case ratio for applications that are equipped with a transfer case capable of providing range selection (e.g., four wheel drive low).
Transfer Case OSS	—	RPM	This parameter displays the transfer case output speed (the speed at the output of the transfer case) determined from the speed measured by the transfer case speed sensor (TCSS).
Upshift Indicator Command	—	Off	This parameter indicates that the transmission upshift indication is being requested On over serial communication in order to recommend that the driver shift up to a higher gear to improve fuel economy.
Vehicle Speed Output Circuit 2 High Voltage Test Status	—	OK	This parameter displays the state of the vehicle speed output circuit 2. The parameter displays Malfunction if the vehicle speed output circuit 2 is shorted to voltage.
Vehicle Speed Output Circuit 2 Low Voltage Test Status	—	OK	This parameter displays the state of the vehicle speed output circuit 2. The parameter displays Malfunction if the vehicle speed output circuit 2 is shorted to ground.
Vehicle Speed Output Circuit 2 Open Test Status	—	OK	This parameter displays the state of the vehicle speed output circuit 2. The parameter displays Malfunction if the vehicle speed output circuit 2 is open.
Vehicle Speed Sensor	—	0 km/h / MPH	This parameter indicates the vehicle speed as calculated by the control module based on a signal from the vehicle speed sensor (VSS). The scan tool will display a higher value at higher vehicle speeds, and a lower value at lower vehicle speeds.
Vehicle Speed When Engine Overspeed Detected	—	km/h / MPH	This parameter displays the peak engine speed observed during all overspeed conditions.
VIN Programming Counter	—	Counts	This parameter displays the number of times the VIN has been programmed.
Warm-ups Since DTC Cleared	—	#	This parameter indicates the number of warm up cycles that have occurred Since DTCs were cleared. The scan tool will display a higher counts as more warm up cycles have occurred since the DTCs were cleared.

Parameter	System State	Expected Value	Description
Warm-ups Without Emission Malfunctions	—	#	This parameter indicates the number of warm up cycles that have occurred without an emission Malfunction present. The scan tool will display a 0 if a Malfunction has occurred. The scan tool will display a higher count if a number of warm up cycles have occurred without an emission Malfunction.
Warm-ups Without Non-Emission Malfunctions	—	#	This parameter indicates the number of warm up cycles that have occurred without a non-emission Malfunction present. The scan tool will display a 0 if a Malfunction has occurred. The scan tool will display a higher count if a number of warm up cycles have occurred without a non-emission Malfunction.
Wide Open Throttle	—	No	This parameter indicates the throttle status commanded by the control module. The scan tool will display YES if the vehicle throttle is commanded to wide open. The scan tool will display NO if the vehicle throttle is commanded to an amount less than 100%.

Output Control

Parameter	Description
This is a comprehensive list. Not all output controls listed are available for all applications.	
A/C Compressor Clutch Relay	This device control is used to override the state of the air conditioning compressor output.
A/C Relay	The engine must be running and the ECM must receive an A/C request from the HVAC control module in order to enable the output control. The ECM de-energizes the A/C compressor clutch relay when you select OFF. The relay remains de-energized until you select ON.
Ambient Air Temperature Reset	This device control resets the environmental temperature (ENVT) model. This device control is to be used to force the ENVT model to update for service of different monitors.
Brake Pedal Position Sensor Learn	This device control is used to reset the brake pedal fully released learned position to its initialized value after a brake system repair.
CAC Coolant Pump	This function activates the charge air cooler (CAC) coolant pump relay. The normal commanded state is OFF. When commanded ON or OFF, the engine control module (ECM) turns the relay ON or OFF. The system remains in the commanded state until cancelled by the scan tool.
Clutch Pedal Position Learn	This device control is used to trigger the procedure to learn the clutch pedal fully applied position.
Cooling Fan Relay 1, Relays 2 and 3, Relays 1, 2 and 3	This device control is used to override the state of the cooling fan control output.
Crankshaft Position Reluctor Wheel Learn	This device control is used to reset the crank wheel adaptation values in case of an ECM or crank wheel replacement.
Crankshaft Position Variation Learn	This device control is used to activate the crankshaft position variation learn algorithm which calculates the reference pulse correction factors for the misfire diagnostic.
Cylinder 1, 3, 4, 6, 7	This device control is used to deactivate one of the engine's cylinders with the engine running by commanding the appropriate displacement on demand solenoid output on.
Cylinder Deactivation System	This device control is used to deactivate half of the engine's cylinders by commanding all of the displacement on demand solenoid outputs on.
Cylinder Power Balance	This device control is used to override the state of the fuel injector outputs. This device control is used to disable injectors in order to cut off fuel to the associated cylinders.
Depressurize Fuel System	When the low pressure fuel pump is used in conjunction with a separate high pressure fuel pump for direct injection (DI) engines, this device control can be used to reduce the high fuel pressure to a low working level.
Engine Controls Ignition Relay	This device control is used to override the state of the powertrain relay.
Engine Oil Life Reset	This device control may be used to reset the engine oil remaining life to 100% after an oil change or to any other value when replacing a control module.

Parameter	Description
Engine Oil Pressure Control Solenoid Valve	This device control is used to override the state of the variable displacement oil pump. When the variable displacement oil pump is turned on, the oil pump will be commanded to a low pressure state.
Engine Serial Number	This device control displays the engine serial number.
Engine Speed	This device control is used to override the idle engine speed.
Engine Speed Control	Activates the idle air control (IAC) valve to change engine RPM. The normal commanded state is NONE. To enable the RPM control, all instruction on the scan tool must be completed. The system will Increase or Decrease the engine speed. The SET STEP VALUE changes the engine speed by increments of 25 RPM, 100 RPM, and 500 RPM. The system remains in the commanded state until cancelled by the tool.
EVAP Purge/Seal	This control enables 2 functions. One function increases or decreases the amount of purge by changing the duty cycle of the purge valve and commanding the vent ON (non-venting). The normal commanded state of both valves is NONE. The system will Increase or Decrease the amount of EVAP purge valve opening by 10 percent increments within a range of 0–100 percent. The second function seals the system after using the purge function to obtain a specific amount of fuel tank pressure (FTP). When activated the purge valve is commanded to 0 percent and the vent valve is commanded ON (non-venting). Both functions remain in the commanded state until cancelled by the tool or the FTP exceeds 24 mm Hg (12 in H2O).
EVAP Purge Solenoid	Activates the EVAP Purge Valve. The normal commanded state is OFF. The system will Increase or Decrease the amount of EVAP purge valve opening by 10 percent increments within a range of 0–100 percent. The system remains in the commanded state until cancelled by the tool or the fuel tank pressure exceeds 24 mm Hg (12 in H2O).
EVAP Purge Solenoid Valve	This device control is used to verify functionality of the fuel vapor purge system by allowing the canister purge output to be commanded to a specific duty cycle.
EVAP Service Test	Activates the on-board EVAP diagnostic test.
EVAP Test	This device control is used to activate the evaporative emissions service bay test.
EVAP Vent Solenoid	Activates the EVAP vent solenoid. The normal commanded state is OFF. When commanded ON, the vent valve switches to non-venting. The system remains in the commanded state unless one of the following conditions occurs: • Cancelled by the tool • Purge is greater than 0 percent, and the fuel tank pressure exceeds 24 mm Hg (12 in H2O).
EVAP Vent Solenoid Valve	This device control is used to either open or close the canister vent.
Fuel Composition Reset	This device control is used to reset the learned ethanol content of the fuel to a default calibration value.
Fuel Control Loop Status	This device control is used to enable or disable closed loop fuel.
Fuel Injector Balance	This device control is used to override the state of the fuel injector outputs. This device control is used to trigger a single injector to be commanded on for a short duration in order to test the flow of the injector to the associated cylinders.
Fuel Pump Enable	This device control is used to override the state of the fuel pump output discrete hardwire between the ECM and the fuel pump control module (FPCM) or the fuel pump driver module.
Fuel Pump Relay	Controls the fuel pump relay. The normal commanded state is NONE. When commanded ON/OFF, the PCM turns the fuel pump ON/OFF. If the engine is running, and the fuel pump is commanded OFF, the engine will stall. The system remains in the commanded state until cancelled by the scan tool.
Fuel Pump Speed	This device control is used to override the normal control of the fuel pump output. The device control is a service diagnostic aid that is used to determine if the fuel pump system is functioning properly.
Fuel Rail Pressure Relief Valve Reset	This device control is used to trigger a reset of the learned offset value for the high pressure fuel pump relief valve.
Fuel System Pressure Test	This device control is used to charge the fuel rail on a high pressure direct injection system before completing the assembly of the engine in order to check for fuel leaks. This feature will allow the technician to inspect the fuel system for leaks after servicing the fuel system or after any other service procedure that required disconnection or removal of fuel system components. The starter relay is commanded on to crank the engine. Spark (SIDI) and fuel injection are inhibited to prevent the engine from starting. The high pressure fuel pump/regulator(s) are controlled to ensure maximum fuel system pressure is achieved while the engine is cranking and fuel pressure maintained after the engine stops rotating.

Parameter	Description
Fuel System Reset	This device control is used to trigger a reset of the fuel set-point adaptation (FSA) learning adaptive map.
Fuel Trim Enable	This device control is used to enable or disable fuel trim learning.
Fuel Trim Reset	This device control is used to reset the learned fuel trim values to their initial values.
Generator L-Terminal	This device control is used to override the state of the generator L terminal output.
High Pressure Fuel Pump Learn	This device control is used to start (trigger) and run the high fuel pressure learn process in order to fine tune the high pressure fuel pump after a high pressure component replacement.
HO2S Heater Bank 1 or 2 Sensor 1 or 2	This device control is used to override the duty cycle of the oxygen sensor heaters.
HO2S Heater Bank 1 Sensor 1 Command	Activates the HO2S bank 1 sensor 1 heater. The commanded states include ON and OFF. The normal commanded state is OFF. Commanding the HO2S bank 1 sensor 1 heater ON turns on the heater driver. The system remains in the commanded state until cancelled by the tool.
HO2S Heater Bank 1 Sensor 2 Command	Activates the HO2S bank 1 sensor 2 heater. The commanded states include ON and OFF. The normal commanded state is OFF. Commanding the HO2S bank 1 sensor 2 heater ON turns on the heater driver. The system remains in the commanded state until cancelled by the tool.
HO2S Heater Bank 2 Sensor 1 Command	Activates the HO2S bank 2 sensor 1 heater. The commanded states include ON and OFF. The normal commanded state is OFF. Commanding the HO2S bank 2 sensor 1 heater ON turns on the heater driver. The system remains in the commanded state until cancelled by the tool.
HO2S Heater Learn	This device control is used to trigger a service bay procedure to learn the oxygen sensor heater resistance following a sensor replacement in service.
HO2S Reset	This device control is used to trigger a reset of the oxygen sensor drift compensation value, in case of an oxygen sensor replacement.
HO2S Test	This device control is used to trigger a service bay procedure to execute the oxygen sensor response test following a sensor replacement in service.
Idle Ignition Timing	This device control is used to disable the portion of the spark control algorithm that adjusts spark angle to correct the difference between commanded idle engine speed and actual idle engine speed.
Idle Learn	This device control is used to reset the learned airflow adaptive values to their initial values.
Ignition Timing Retard	This device control is used to retard the spark angle from the software calculated spark angle. For example, if the software calculated spark angle was 15 degrees advanced and this device control requested a 3 degree retard, the commanded spark angle that would be delivered would be 12 degrees advanced.
Intake Camshaft Position Actuator	This device control is used to override the state of the intake cam phase output. The commanded camshaft position is expressed in terms of degrees of camshaft rotation (advance for intake camshafts) from the park position (a camshaft position of zero represents the park position).
Intake Camshaft Position Actuator Solenoid Valve	This device control is used to override the state of the intake cam phase solenoid output.
MAF Sensor Supply Voltage	This device control is used to override the state of the mass air flow sensor supply voltage output.
Malfunction Indicator Lamp (MIL)	This device control is used to either turn the malfunction indicator lamp (MIL) on or off.
Misfire Graphic	Graphs the accumulated misfires occurring in each cylinder. The scan tool allows for a reset of the misfire graph.
Remote Vehicle Start Disable History Reset	This device control is used to trigger the reset of the last eight reasons that powertrain has disabled remote vehicle start (RVS).
Reverse Inhibit	This device control is used to override the state of the Reverse Inhibit output.
RVS Disable History Reset	This output control is used to trigger the reset of the last 8 reasons the ECM has disabled remote vehicle start (RVS).
Skip Shift Solenoid	Activates the Skip Shift Solenoid
Starter Relay	This device control is used to override the state of the starter relay output. Fuel and spark are disabled to prevent the engine from starting if the starter relay output is commanded on.
Throttle Position	This device control is used to override the commanded throttle position.

Parameter	Description
Throttle Sweep	This device control is used to automatically command the throttle blade from 0% to 100% and then back to 0%
Tire Size Selection	This function is used for correcting vehicle speed and odometer calculations when tire size is changed.

K20 Engine Control Module: Scan Tool Information

Engine Control Module Scan Tool Data

Parameter	System State	Expected Value	Description
This is a comprehensive list. Not all parameters listed are available for all applications. **Base Operating Conditions:** Engine Idling/Radiator Hose Hot/Park or Neutral/Closed Loop/Accessories OFF			
Air Conditioning Compressor Clutch Command	---	On / Off	This parameter displays the commanded state of the air conditioning (A/C) compressor output.
Air Conditioning Disable - Air Conditioning Pressure Out of Range	---	Yes / No	This parameter indicates if the A/C compressor was disengaged due to pressure out of range.
Air Conditioning Disengage History 1-8	---	Varies	This parameter indicates the last 8 A/C disengage history reasons.
Air Conditioning High Side Pressure Sensor	Air Conditioning OFF	Varies	The scan tool displays 0–5 volts. The voltage applied to the ECM input for the A/C refrigerant pressure sensor.
	Air Conditioning ON	Varies	
Air Conditioning High Side Pressure Sensor	Air Conditioning OFF	Varies	The scan tool displays 0–3450 kPa (0–500 psi). The voltage applied to the ECM input from the A/C refrigerant pressure sensor is converted to a pressure value.
	Air Conditioning ON	Varies	
Air Conditioning Request Signal	A/C ON	Yes	The scan tool displays Yes/No. The HVAC module receives an input request when the HVAC module is turned On.
	A/C OFF	No	
Accelerator Pedal Position	Accelerator pedal not actuated	0%	This parameter displays the angle of the accelerator pedal as calculated by the control module using the signals from the accelerator pedal position sensors. The accelerator pedal position (APP) indicated angle is a range of values indicating a low percentage when the accelerator pedal is not depressed to a high percentage when the accelerator pedal is fully depressed.
	Accelerator pedal fully actuated	100%	
Accelerator Pedal Position Sensor	Accelerator pedal not actuated	0.7–1.2 Volts	This parameter displays the voltage signal sent to the control module from Accelerator Pedal Position Sensor of the assembly. A range of values indicating a low voltage when the accelerator pedal is not depressed to a high voltage when the accelerator pedal is fully depressed.
	Accelerator pedal fully actuated	4.2–4.5 Volts	

Parameter	System State	Expected Value	Description
Accelerator Pedal Position Sensor and Sensor 2	—	Agree	This parameter displays Disagree if the control module detects the signal voltage from the Accelerator Pedal Position Sensor is not in correct relationship to Accelerator Pedal Position Sensor 2. The scan tool displays Agree under the normal operating conditions.
Accelerator Pedal Position Sensor Circuit Status	—	Okay	Indicates the Accelerator Pedal Position Sensor circuit is currently out of range or that a Malfunction has been detected.
Accelerator Pedal Position Sensor Learned Released Position	—	Volts	This Parameter indicates the accelerator pedal position sensor signal at its minimum learned position (pedal released) as a percentage of its reference voltage. (The minimum learned position is automatically updated periodically as determined by the engine control module (ECM).
Accelerator Pedal Position Sensor Position	Accelerator pedal not actuated	0.0%	This parameter displays the angle of the Accelerator Pedal Position Sensor as calculated by the control module Accelerator Pedal Position Sensor ranges from a low percentage when the accelerator pedal is not depressed to a high percentage when the accelerator pedal is fully depressed.
	Accelerator pedal fully actuated	100%	
Accelerator Pedal Position Sensor 2 Position	Accelerator pedal at rest position	0.3–0.5 Volts	This parameter displays the angle of the Accelerator Pedal Position Sensor 2 as calculated by the control module Accelerator Pedal Position Sensor 2 ranges from a low percentage when the accelerator pedal is not depressed to a high percentage when the accelerator pedal is fully depressed.
	Accelerator pedal at WOT	2.0–2.5 Volts	
Accelerator Pedal Position Sensor 2 Circuit Status	—	Okay	Indicates that the sensed Accelerator Pedal Position Sensor 2 value is currently out of range or that a malfunction has been detected.
Accelerator Pedal Position Sensor 2 Learned Released Position	—	Volts	This Parameter indicates the Accelerator Pedal Position Sensor 2 signal at its minimum learned position (pedal released) as a percentage of its reference voltage. (The minimum learned position is automatically updated periodically as determined by the engine control module (ECM).
Accelerator Pedal Position Sensor 2 Position	Accelerator pedal at rest position	0.0%	This parameter displays the angle of the Accelerator Pedal Position Sensor 2 as calculated by the control module. Indicates a low percentage when the accelerator pedal is not depressed to a high percentage when the accelerator pedal is fully depressed.
	Accelerator pedal at WOT	100%	

Parameter	System State	Expected Value	Description
Accelerator Pedal Position Sensors	—	%	This Parameter contains the accelerator pedal position resulting directly from the settling of differences of the accelerator pedal position sensors (prior to any compensation to determine driver intent).
Ambient Air Temperature	—	Varies °C (°F)	Outside temperature expressed in degrees
Ambient Air Temperature Sensor	—	Varies °C (°F)	Ambient temperature expressed in degrees
Ambient Humidity	—	Varies %	Outside humidity expressed in a percentage.
Autostop Disable Reason - Particulate Filter Test in Progress	—	Yes / No	This parameter displays Yes if Autostop is disabled because a particulate filter test is in progress.
Average Distance Between Particulate Filter Regenerations	—	km/miles	This parameter contains the mean distance between particulate filter regenerations.
Average Reductant Consumption	—	g/km	This parameter displays the average reductant consumption in gallons per kilometer.
Average Particulate Filter Regeneration Duration	—	hh:mm:ss	This parameter contains the mean duration of the diesel particulate filter regenerations. The value in this parameter shall be updated after every diesel particulate filter regeneration attempt.
Average Particulate Filter Inlet Temperature During Regeneration	—	ºC (ºF)	This parameter contains the mean diesel particulate filter inlet temperature, during the diesel particulate filter regenerations.
Barometric Pressure Sensor	—	kPa (PSI) Varies with altitude	This parameter displays the barometric pressure in kPa.
Barometric Pressure Sensor 2	—	kPa (PSI) Varies with altitude	This parameter displays the barometric pressure in volts.
Battery Voltage	Ignition ON	Volts	This parameter displays the battery voltage.
Boost System Monitor - This Ignition Cycle	—	Disabled, Enabled, Complete	The scan tool displays Enabled when the Boost System Monitor is enabled for this ignition cycle.
Boost System Monitor - Since Diagnostic Trouble Codes Cleared	—	Not Supported, Complete, Incomplete	The scan tool displays Complete when the Boost System Monitor is complete.
Brake Pedal Position Sensor	—	Volts	This parameter displays the brake pedal position sensor in volts.
Brake Pedal Position Sensor	—	%	This parameter displays the brake pedal position sensor in percentage applied.
Brake Pedal Position Sensor Fully Released Learn Status	—	Complete / Incomplete	This parameter displays the brake pedal release position learned status.
Brake Pedal Position Sensor Learned Released Position	—	Volts	This parameter displays the brake pedal learned released position in volts.
Brake Pedal Position Sensor Signal	Released	Applied / Released / Invalid	This parameter displays the status of the brake pedal as determined by the ECM.

Parameter	System State	Expected Value	Description
Brake Pedal Position Switch Circuit Signal	Released	Applied / Released	This parameter displays the status of the brake pedal position circuit.
Calculated Nitrogen Oxides Catalytic Converter Efficiency Gross Error Test	—	%	This parameter displays the estimated average Selective Catalyst Reduction (SCR) efficiency for urea quality determination during the gross error test.
Calculated Nitrogen Oxides Catalytic Converter 2 Efficiency	—	%	This parameter displays the estimated average Selective Catalyst Reduction 2 (SCR2) efficiency.
Calculated Nitrogen Oxides Catalytic Converter 2 Efficiency During Particulate Filter Regeneration	—	Okay / Malfunction	This parameter displays the SCR2 efficiency monitor estimated average efficiency during particulate filter regeneration.
Calculated Nitrogen Oxides Emissions Monitor Efficiency	—	%	This parameter displays the estimated average nitrogen oxides emissions monitor efficiency.
Calculated Particulate Filter Flow Resistance	—	kPa / (liter/s)	This parameter displays the filtered flow resistance of the Diesel Particulate FIlter.
Calibration History Buffer	—	Locked / Unlocked	This parameter displays when the calibration buffer has been locked against further updates due to detection of a non-production calibration.
Calibration Verification Number History 1 – 10	—	#	This parameter displays the history of calibration verification from 1–10.
Camshaft Position Signal Output Circuit High Test Status	Engine Idling	Okay	This parameter displays the state of the Camshaft Position Signal Output Circuit. The parameter displays Malfunction if the Camshaft Position Signal Output Circuit is shorted to voltage.
Camshaft Position Signal Output Circuit Low Test Status	Engine Idling	Okay	This parameter displays the state of the Camshaft Position Signal Output Circuit. The parameter displays Malfunction if the Camshaft Position Signal Output Circuit is shorted to ground.
Camshaft Position Signal Output Circuit Open Test Status	Engine Idling	Okay	This parameter displays the state of the Camshaft Position Signal Output Circuit. The parameter displays Malfunction if the Camshaft Position Signal Output Circuit is open.
Catalytic Converter Monitor - Since Diagnostic Trouble Codes Cleared	—	Not Supported / Complete / Incomplete	This parameter indicates the status of the catalyst monitor diagnostic. Monitor Test indicates Complete when the catalyst monitor diagnostic has been run since DTCs have been cleared.
Charge Air Cooler Temperature Sensor	—	ºC (ºF)	This parameter displays the charge air cooler temperature measured by a sensor located first in the charge air cooler stream.
Charge Air Cooler Temperature Sensor 2	—	ºC (ºF)	This parameter displays the charge air cooler temperature measured by a sensor located first in the charge air cooler stream.

Parameter	System State	Expected Value	Description
Charge Air Cooler Coolant Inlet Temperature Sensor	—	ºC (ºF)	This parameter contains the undefaulted charge air cooler temperature measured by a sensor located first in the charge air cooler stream in relationship to any other charge air cooler temperature sensors in the system.
Control Module Voltage Signal	—	B+	This parameter displays the voltage of the power input to the engine control module. Since battery voltage is not directly measured by engine control module, switched battery voltage from the Run/Crank input to the engine control module is displayed.
Cooling Fan Command	—	%	This parameter displays the cooling fan duty cycle.
Cooling Fan Speed	Ignition ON	Varies	This parameter displays the current state of the cooling fan speed. (For example OFF, Low, Medium, or High) rather than rotational speed.
Crank Request Signal	—	Yes	This parameter displays the state of the crank request input to the control module from the ignition switch. The scan tool will display Yes when the ignition switch is in the Crank position. The scan tool will display No when the ignition switch is in any other position.
Crankshaft Position Active Counter	—	Counts	This parameter displays an incrementing counter when the control module receives a signal from the crankshaft position sensor (CKP).
Crankshaft Position Sensor	Engine Idling	RPM	This parameter displays engine speed.
Crankshaft Position Signal Output Circuit High Test Status	Ignition ON	Okay	This parameter displays the state of the Crankshaft Position Signal Output Circuit. The parameter displays Malfunction if the Crankshaft Position Signal Output Circuit is shorted to voltage.
Crankshaft Position Signal Output Circuit Low Test Status	Ignition ON	Okay	This parameter displays the state of the Crankshaft Position Signal Output Circuit. The parameter displays Malfunction if the Crankshaft Position Signal Output Circuit is shorted to ground.
Crankshaft Position Signal Output Circuit Open Test Status	Ignition ON	Okay	This parameter displays the state of the Camshaft Position Signal Output Circuit. The parameter displays Malfunction if the Crankshaft Position Signal Output Circuit is open.
Crankshaft Position Variation Learn	Ignition ON	Learn In Progress / Learning Not Enabled	This parameter displays if the crank angle learned this key cycle.
Crankshaft Position Variation Learn Status	Ignition ON	Complete	This parameter displays the status of the crank angle sensing error (CASE) learn algorithm.

Parameter	System State	Expected Value	Description
Cruise Control	—	Enabled / Disabled	This parameter displays the status of the cruise control system as determined by the control module. The scan tool will display Enabled when the cruise control system is able to control vehicle speed. The scan tool will display Disabled when the cruise control system is not operating.
Cruise Control Cancel Switch	—	Inactive	This parameter displays the status of the cruise control cancel switch
Cruise Control Disengage History 1–8	Cruise ON	Reason for Cruise Disengagement	These parameters indicate the last 8 reasons the ECM disengaged the cruise control. History 1 contains the most recent reason.
Cruise Control Inhibit Reason	—	None	The parameter displays the reason the cruise control system cannot engage.
Cruise Control On/Off Switch	—	Off	This parameter displays the state of the On/Off switch input to the control module . The scan tool will display On when the cruise On/Off switch is ON. The scan tool will display Off when the cruise ON/OFF switch is OFF.
Cruise Control Resume/ Accelerate Switch	—	Inactive	This parameter displays the state of the Resume/Accel switch input to the control module When the cruise control switch is in the On position and the Resume/Accel switch is activated, the scan tool displays On. When the Resume/Accel switch is released the scan tool displays Off.
Cruise Control Set/Coast Switch	—	Inactive	This parameter displays the state of the Set/Coast switch input to the control module from the cruise control system. When the cruise control switch is in the on position and the Set/Coast switch is activated, the scan tool displays Active. When the Set/Coast switch is released the scan tool displays Inactive.
Cruise Control Switch	—	Varies	This parameter displays the cruise control/speed limiter raw switch states.
Cylinder 1, 2, 3, 4, 5, or 6 Balancing Rate	—	Varies	These parameters display the adjustment in fuel volume for each cylinder as calculated by the control module. The scan tool will display a negative balancing rate if the fuel volume is lowered. The scan tool will display a positive balancing rate if the fuel volume is increased.
Cylinder 1, 2, 3, 4, 5, or 6 Current Misfire Counter	—	Counts	This parameter displays the number of misfires detected for cylinder's 1–6 within the current 100 engine cycle test interval. The set of misfire counters for the individual cylinders are maintained such that if a single misfire is detected over an engine cycle.

Parameter	System State	Expected Value	Description
Cylinder 1, 2, 3, 4, 5, or 6 History Misfire Counter	—	Counts	This parameter displays the number of misfires detected for cylinder's 1–6 since a misfire failure has been reported.
Cylinder 1, 2, 3, 4, 5, or 6 Fuel Injection Timing	—	°	This parameter displays the start point of the main injection in degrees crank shaft (°CS) relative to Top Dead Center (TDC) of cylinder's 1–6.
Cylinder 1, 2, 3, 4, 5, or 6 Fuel Injector Command	—	ms	This parameter displays the total injection time of cylinder's 1–6. Total injection time includes all pilot injections, main injections and post injections.
Cylinder 1, 2, 3, 4, 5, or 6 Fuel Injector Control Circuit Status	—	Okay	This parameter displays the status of the fuel injector's 1–6 output malfunction for Short circuit from injector high side to ground or system voltage, Short circuit from injector low side to injector low side, Short circuit from injector low side to ground or system voltage, Short circuit from injector high side to low side and Injector open circuit.
Cylinder 1, 2, 3, 4, 5, or 6 Fuel Injector Flow Identifier	—	#	This parameter is used to correct the injected quantity of each injector When injectors are replaced or exchanged, the Injector Quantity adjustment values of the replaced or exchanged injectors have to be entered into the ECM to ensure acceptable engine performance regarding emissions
Cylinder Head Temperature Sensor	—	°C (°F)	This parameter displays the cylinder head temperature in °C (°F).
Cylinder Head Temperature Sensor 2	—	°C (°F)	This parameter displays the cylinder head temperature in °C (°F).
Deceleration Fuel Cut-Off	—	Inactive	Decel Fuel Cut Off Active indicates that the conditions to enable deceleration fuel cut-off (DFCO) are active and that torque is being reduced by turning off one or more fuel injectors
Desired Exhaust Gas Recirculation Valve Position	—	%	This parameter displays the position of the exhaust gas recirculation (EGR) valve commanded by the control module. The scan tool will display 0 percent when the control module is commanding the EGR valve closed. The scan tool will display a higher percentage when the EGR valve is commanded open.
Desired Fuel Pressure	Ignition ON	kPa (PSI)	This parameter displays the desired fuel supply pressure.

Parameter	System State	Expected Value	Description
Desired Fuel Rail Pressure	—	MPa/PSI	This parameter displays the desired fuel rail pressure as calculated by the control module. This value is calculated based on engine speed, engine load, and sensor inputs. The scan tool will display a higher value at higher engine speeds and loads, and a lower value at idle.
Desired Idle Speed	—	600–825 RPM	This parameter displays the engine idle speed in RPM as commanded by the control module. The control module compensates for various engine loads in order to maintain the desired engine speed at idle. This parameter is not valid unless the engine is running.
Desired Intake Air Flow Control Valve Position	—	%	This parameter will display the position of the intake air flow control valve as a percentage.
Desired Nitrogen Oxides Catalytic Converter Reductant Load	—	g	This parameter contains the NH3 (Ammonia) storage setpoint value for the Selective Catalyst Reduction (SCR) system in terms of grams.
Desired Reductant Injector Command	—	ms	This parameter contains the desired injection time of the reductant dosing valve.
Desired Reductant Pressure	—	kPa (PSI)	This parameter contains the desired reductant system pressure.
Desired Turbocharger/ Supercharger Boost Control Position	—	%	This parameter displays the position of the turbocharger vane position sensor as the turbocharger vane position is commanded by the control module. The scan tool will display 0 percent when the control module is commanding the vanes open. The scan tool will display a higher percentage when the vanes are commanded closed.
Desired Turbocharger/ Supercharger Boost Pressure	—	kPa (PSI)	This parameter displays the Turbocharger Boost pressure as commanded by the control module. This parameter shows the turbocharger boost pressure in kPa (PSI).
Distance Driven from Diagnostic Trouble Code Clear to First Malfunction	—	km/miles	This parameter displays the distance accumulated since DTC Clear to first occurrence of a DTC malfunction. This parameter is only meaningful within the context of a failure record or freeze frame.
Distance Driven from Diagnostic Trouble Code Clear to Last Malfunction	—	km/miles	This parameter displays the distance accumulated since DTC Clear to last occurrence of a DTC malfunction. This parameter is only meaningful within the context of a failure record or freeze frame.
Distance Since Last Particulate Filter Regeneration	—	km/miles	This parameter will display the amount of vehicle travel after a Particulate Filter regeneration. This parameter will be displayed in km/ miles.
Distance This Driving Cycle	—	km/miles	This parameter displays the distance a vehicle has traveled in the current driving cycle.

Parameter	System State	Expected Value	Description
Distance Since Last Particulate Filter Regeneration	—	km/miles	This parameter will display the distance since the last particulate filter regeneration event.
Drag control Status	—	Active/Inactive	EDC Active (Drag Active) control mode is indicated when the requested torque signal is above the driver requested value while the traction control system signal input is active.
Driver Demanded Engine Torque	—	%	This parameter displays the requested torque output of the engine by the driver.
Drop Throttle Detected while Traction Control Active	—	No	Drop Throttle Control Mode is indicated when this parameter displays Yes.
Drop Throttle Status	—	Inactive	This parameter provides an indication when the controller software determines a condition is present where the vehicle operator has abruptly released the accelerator pedal (drop-throttle) after a period of acceleration.
ECM Authentication Status	—	Valid	Authentication Status indicates the result of the comparison between the last received immobilizer response and the expected response calculated by the engine control module (ECM).
ECM Challenge Status	—	Valid	This parameter displays the condition of the ECM code challenge to the BCM.
ECM Requested Particulate Matter Mass Concentration Measurement	—	No	This parameter indicates the ECM has requested a measurement of particulate matter mass from the particulate matter sensor.
ECM Requested Particulate Matter Sensor Initialization	—	No	This parameter displays Yes when the particulate matter sensor is initialized by the ECM.
ECM Response Source	—	Normal Start	This parameter displays ECM response source.
ECT Sensor	—	85–105°C/185–220°F	This parameter displays the temperature of the engine coolant based on the input from the engine coolant temperature (ECT) sensor. When the coolant temperature is low, the scan tool will display a low temperature. When the coolant temperature is high, the scan tool will display a high temperature.
EGR/Camshaft Position Monitor Complete	—	Yes/No	This parameter displays the status of the EGR/Camshaft Position Monitor. The parameter will display Yes when the EGR/Camshaft Position Monitor is complete.
EGR/Camshaft Position Monitor Complete This Ignition Cycle	—	Yes/No	This parameter displays the status of the EGR/Camshaft Position Monitor for this Ignition Cycle. The parameter will display Yes when the EGR/Camshaft Position Monitor is complete this Ignition Cycle.

Parameter	System State	Expected Value	Description
EGR/Camshaft Position Monitor Enabled	—	Yes/No	This parameter displays the status of the EGR/Camshaft Position Monitor. The parameter will display Yes when the EGR/Camshaft Position Monitor is Enabled.
EGR/Camshaft Position Monitor Enabled This Ignition Cycle	—	Yes/No	This parameter displays the status of the EGR/Camshaft Position Monitor for this Ignition Cycle. The parameter will display Yes when the EGR/Camshaft Position Monitor is Enabled this Ignition Cycle.
EGR Command	—	%	This parameter displays the commanded duty cycle for the exhaust gas recirculation (EGR) output.
EGR Control Circuit 1 High Voltage Status	—	OK	This parameter displays the state of the EGR Control circuit 1. The parameter displays Malfunction if the EGR Control circuit 1 is shorted to voltage.
EGR Control Circuit 1 Low Voltage Status	—	OK	This parameter displays the state of the EGR Control circuit 1. The parameter displays Malfunction if the EGR Control circuit 1 is shorted to ground.
EGR Control Circuit 2 High Voltage Status	—	OK	This parameter displays the state of the EGR Control circuit 2. The parameter displays Malfunction if the EGR Control circuit 2 is shorted to voltage.
EGR Control Circuit 2 Low Voltage Status	—	OK	This parameter displays the state of the EGR Control circuit 2. The parameter displays Malfunction if the EGR Control circuit 2 is shorted to ground.
EGR Control Circuit Open Test Status	—	OK	This parameter displays the state of the EGR Control circuit. The parameter displays Malfunction if the EGR Control circuit is open.
EGR Control Circuit Shorted Test Status	—	OK	This parameter displays the state of the EGR Control circuit. The parameter displays Malfunction if the EGR Control circuit is shorted.
EGR Control Driver Overcurrent	—	No	This parameter displays the state of the EGR Control circuit. The parameter displays Yes if the EGR Control Driver Overcurrent is detected.
EGR Control Driver Overtempera-ture	—	No	This parameter displays the state of the EGR Control circuit. The parameter displays Yes if Over Temperature is Detected and that the driver circuit has been shut OFF.
EGR Control Driver Temperature Dependent Overcurrent	—	No	This parameter displays the state of the EGR Control circuit. The parameter displays Yes if Temperature Dependent over Current Detected and that the driver circuit has been shut OFF.

Parameter	System State	Expected Value	Description
EGR Control Driver Undervoltage	—	No	This parameter displays the state of the EGR Control circuit. The parameter displays Yes when the Under Voltage Detected indicates that the entire system voltage is low.
EGR Cooler Bypass Valve Command	—	%	This parameter displays the commanded duty cycle for the Exhaust Gas Recirculation Cooler Bypass Valve actuator output.
EGR Cooler Bypass Valve Control Circuit High Voltage Test Status	—	OK	This parameter displays the state of the EGR Cooler Bypass Valve Control circuit. The parameter displays Malfunction if the EGR Cooler Bypass Valve Control circuit is shorted to voltage.
EGR Cooler Bypass Valve Control Circuit Low Voltage Test Status	—	OK	This parameter displays the state of the EGR Cooler Bypass Valve Control circuit. The parameter displays Malfunction if the EGR Cooler Bypass Valve Control circuit is shorted to ground.
EGR Cooler Bypass Valve Control Circuit Open Test Status	—	OK	This parameter displays the state of the EGR Cooler Bypass Valve Control circuit. The parameter displays Malfunction if the EGR Cooler Bypass Valve Control circuit is open.
EGR Cooler Bypass Valve Control Circuit Shorted Test Status	—	OK, Malfunction, Not Run	This parameter contains the control circuit status of the exhaust gas recirculation cooler bypass valve output
EGR Cooler Bypass Valve Control Driver Overcurrent	—	No	This parameter displays the state of the EGR Cooler Bypass Valve Control circuit. The parameter displays Yes if the EGR Cooler Bypass Valve Control Driver Overcurrent is detected.
EGR Cooler Bypass Valve Control Driver Overtemperature	—	No	This parameter displays the state of the EGR Cooler Bypass Valve Control circuit. The parameter displays Yes if Over Temperature is Detected and that the driver circuit has been shut OFF.
EGR Cooler Bypass Valve Control Driver Temperature Dependant Overcurrent	—	No	This parameter displays the state of the EGR Cooler Bypass Valve Control circuit. The parameter displays Yes if Temperature Dependent over Current Detected and that the driver circuit has been shut OFF.
EGR Cooler Bypass Valve Control Driver Undervoltage	—	No	This parameter displays the state of the EGR Cooler Bypass Valve Control circuit. The parameter displays Yes when the Under Voltage Detected indicates that the entire system voltage is low.
EGR Cooler Bypass Valve Learned Closed Position	—	OK, Malfunction, Not Run	This parameter contains the control circuit status of the exhaust gas recirculation cooler bypass valve output

Parameter	System State	Expected Value	Description
EGR Cooler Bypass Valve Learned Open Position	—	OK, Malfunction, Not Run	This parameter contains the control circuit status of the exhaust gas recirculation cooler bypass valve output
EGR Cooler Bypass Valve Position	—	%	This parameter contains the actual exhaust gas recirculation (EGR) cooler bypass valve displacement determined by a position sensor (corrected based upon its learned minimum position).
EGR Cooler Bypass Valve Position Sensor	—	Volts	This parameter contains the Exhaust Gas Recirculation Cooler Bypass Valve position sensor analog input as a percentage of its reference voltage
EGR Cooler Temperature Sensor 1	—	°C (°F)	This parameter will display the exhaust temperature entering the EGR Cooler. The EGR Temp Sensor 1 temperature will be warmer than the EGR Temp Sensor 2.
EGR Cooler Temperature Sensor 2	—	°C (°F)	This parameter will display the exhaust temperature exiting the EGR Cooler. The EGR Temp Sensor 2 temperature will be cooler than the EGR Temp Sensor 1.
EGR Temperature Sensor 1	—	ºC (ºF)	This parameter contains the undefaulted exhaust gas recirculation cooler temperature measured by a sensor that is located before the inlet of the EGR heat exchanger.
EGR Temperature Sensor 2	—	ºC (ºF)	This parameter contains the undefaulted exhaust gas recirculation cooler temperature measured by a sensor that is located on the outlet of the EGR heat exchanger.
EGR Learned Minimum Position	—	Volts	This parameter displays the learned minimum position of the EGR valve as calculated by the control module. The scan tool will display a low value if the current closed EGR position is the same as the last ignition cycle. The scan tool will display a higher value if the EGR valve has closed at a new position.
EGR Learned Minimum Position This Ignition Cycle	—	%	This parameter displays the Exhaust Gas Recirculation Sensor Learned Minimum Position.
EGR Position Sensor	—	%	This parameter displays the EGR valve position as calculated by the control module based on an input from the EGR valve position sensor. The scan tool will display a lower value when the EGR valve is closed, and a higher value when the EGR valve is open.
EGR Position Sensor	—	1.75 Volts	This parameter displays the voltage signal received from the EGR valve position sensor by the control module. The scan tool will display a lower value when the EGR valve is closed, and a higher value when the EGR valve is open.

Parameter	System State	Expected Value	Description
EGR Position Variance	—	%	This parameter displays the EGR position variance from the last learned position.
EGR System Malfunction Warning Indicator Command	—	Off	This parameter indicates when the EGR system malfunction warming indicator is commanded ON.
Electric Power management Inhibit reason	—	None	This parameter displays the reason of the Regulated Voltage Control (RVC) override command. RVC lowers system operating voltage to reduce system electrical load and improve fuel economy performance.
Engine Calibration Monitoring	—	Not Present	This parameter displays Present when Incorrect Engine Calibration Detected.
Engine Calibration Monitoring Identifier	—	Programmed / Not Programmed	This parameter contains status bits associated with the Engine Upgrade Protection strategy.
Engine Calibration Part Number History 1–10	—	#	This parameter displays the part number of the 10 most recent calibrations.
Engine Calibration Part Number History 1–10 Counter	—	Counts	This parameter displays the current count of engine calibrations.
Engine Controls Ignition Relay Command	—	On	This parameter displays the state of the control circuit for engine control module power relay as commanded by the engine control module.
Engine Controls Ignition Relay Feedback 2 Signal	Ignition ON	Volts	This parameter indicates the signal voltage from the second input to the controller from the powertrain relay.
Engine Controls Ignition Relay Feedback 3 Signal	Ignition ON	Volts	This parameter indicates the signal voltage from the third input to the controller from the powertrain relay.
Engine Controls Ignition Relay Control Circuit High Voltage Test Status	—	OK	This parameter displays the state of the Engine Controls Ignition Relay control circuit. The parameter displays Malfunction if the Engine Controls Ignition Relay control circuit is shorted to voltage.
Engine Controls Ignition Relay Control Circuit Low Voltage Test Status	—	OK	This parameter displays the state of the Engine Controls Ignition Relay control circuit. The parameter displays Malfunction if the Engine Controls Ignition Relay control circuit is shorted to ground.
Engine Controls Ignition Relay Control Circuit Open Test Status	—	OK	This parameter displays the state of the Engine Controls Ignition Relay control circuit. The parameter displays Malfunction if the Engine Controls Ignition Relay control circuit is open.
Engine Controls Ignition Relay Feedback Signal	—	12.0-14.9 V	This parameter displays the voltage available at the Engine Controls Ignition Relay pin of the engine control module.

Parameter	System State	Expected Value	Description
Engine Load	—	Varies	This parameter displays the engine load in percent based on inputs to the control module from various engine sensors. The scan tool will display a low percentage when the engine is at idle with little or no load. The scan tool will display a high percentage when the engine is running at a high RPM under a heavy load.
Engine Load During Misfire History 1-10	Ignition ON	%	This parameter displays the engine load during the last misfire event.
Engine Off Time	—	0:00:00 Seconds – Varies	This parameter displays the amount of time that has elapsed since the engine was last cycled OFF.
Engine Oil Absolute Pressure Sensor	—	kPa/PSI	This parameter displays the absolute pressure of the engine oil in kPa and psi.
Engine Oil Level Switch	—	OK/Low	This parameter displays the status of the engine oil level switch as determined by the control module. The control module uses this information to turn on the low engine oil lamp if the engine oil level remains approximately 1 quart low for a sufficient amount of time. The scan tool will display Low when the engine oil level is low. The scan tool will display OK when the engine oil level is correct.
Engine Oil Life Remaining	—	Varies	This parameter displays the amount engine oil life remaining before requiring an oil change based on calculations by the control module. The scan tool will display lower values as the engine oil life approaches 0 miles.
Engine Oil Pressure	—	kPa/PSI	This parameter displays the pressure of the engine oil as calculated by the control module using a signal from the engine oil pressure (EOP) sensor. The scan tool will display oil pressure when the engine is running. The engine oil pressure sensor has a range of values indicating a low value when the oil pressure is low to a high value when the oil pressure is high.
Engine Oil Pressure Control Solenoid Valve Command	—	High Pressure/Low Pressure	This parameter displays the current command of the oil pressure solenoid valve.
Engine Oil Pressure Control Solenoid Valve Control Circuit High Voltage Test Status	—	OK	This parameter displays the status of the output driver for the engine oil pressure control solenoid circuit. The parameter displays Malfunction if the engine oil pressure control solenoid circuit is shorted to voltage.
Engine Oil Pressure Control Solenoid Valve Control Circuit Low Voltage Test Status	—	OK	This parameter displays the status of the output driver for the engine oil pressure control solenoid circuit. The parameter displays Malfunction if the engine oil pressure control solenoid circuit is shorted to ground.

Parameter	System State	Expected Value	Description
Engine Oil Pressure Control Solenoid Valve Control Circuit Open Voltage Test Status	—	OK	This parameter displays the status of the output driver for the engine oil pressure control solenoid circuit. The parameter displays Malfunction if the engine oil pressure control solenoid circuit is open.
Engine Oil Pressure Sensor	—	Volts	This parameter displays the actual engine oil pressure measured by a sensor in volts.
Engine Oil Pressure Switch	—	OK	This parameter displays the state of the EOP as determined by the control module. The control module monitors the engine oil pressure (EOP) switch to determine if the EOP is sufficient. The scan tool will display low when the EOP is below a predetermined value.
Engine Run Time	—	Varies	This parameter displays the time elapsed since the engine was started. The scan tool will display the time in hours, minutes and seconds. The engine run time will reset to zero when the engine stops running.
Engine Run Time Since Last Particulate Filter Regeneration	—	hh:mm:ss	This parameter displays the total of time since the last regeneration. This parameter will be displayed in hours, minutes and seconds.
Engine Serial Number	—	#	This parameter displays the current engine serial number.
Engine Speed	—	600–800 RPM	This parameter displays the speed of the crankshaft as determined by the ECM using an input from the CKP sensor. The scan tool will display a high value at high engine speeds and a low value at low engine speeds.
Engine Speed During Misfire History 1–5	Ignition ON	RPM	This parameter displays the last 5 engine speeds during misfire events.
Engine Speed When Engine Overspeed Detected	Engine Idling	RPM	This parameter displays the engine speed observed upon initial detection of an overspeed condition. This value will be updated after each overspeed condition.
Engine Torque	—	Varies	This parameter displays the estimated amount of torque that is delivered from the engine. The scan tool displays engine torque in newtonm (lb-ft). The ECM sends the engine torque information to the TCM via the high speed GMLAN serial data line.
{ If equipped } Exhaust Aftertreatment Fuel Injection System	—	Inactive	This parameter displays the state of the Exhaust Aftertreatment Fuel Injection System command.

Parameter	System State	Expected Value	Description
{ If equipped } Exhaust Aftertreatment Fuel Injector Test Abort Reasons	—	None, Fuel Pressure Out of Range, Vehicle Speed Detected, Incorrect Power Mode, Exhaust Gas Temperature Too High, DTC Present, Diesel Particulate Filter Regeneration Active, Engine Must Be Running, Transmission Must Be in Park or Neutral, Exhaust Gas Temperature Too Low	This parameter contains the abort reason for the Exhaust Aftertreat-ment Fuel Injector Tip Cleaning Trigger Device Control and Exhaust Aftertreatment Fuel Injector Flow Test Trigger
{ If equipped } Exhaust Aftertreatment Fuel Injector Test Status	—	Not Requested, Flow Test Active, Flow Test Complete, Flow Test Aborted, Cleaning Procedure Active, Cleaning Procedure Complete, Cleaning Procedure Aborted	This parameter contains the status of the Exhaust Aftertreatment Fuel Injector Tip Cleaning and Flow Test device controls.
{ If equipped } Exhaust Aftertreatment Fuel Injector Command	—	%	This parameter displays the state of the Exhaust Aftertreatment Fuel Injection System command in percentage.
{ If equipped } Exhaust Aftertreatment Fuel Injector Control Circuit Command	—	Off	This parameter displays the state of the Exhaust Aftertreatment Fuel Injection Control Circuit command.
{ If equipped } Exhaust Aftertreatment Fuel Injector Control Circuit High Voltage Test Status	—	OK	This parameter displays the status of the exhaust aftertreatment fuel injector control circuit. The parameter displays Malfunction if the exhaust aftertreatment fuel injector circuit is shorted to voltage.
{ If equipped } Exhaust Aftertreatment Fuel Injector Control Circuit Low Voltage Test Status	—	OK	This parameter displays the status of the exhaust aftertreatment fuel injector control circuit. The parameter displays Malfunction if the exhaust aftertreatment fuel injector control circuit is shorted to ground.
{ If equipped } Exhaust Aftertreatment Fuel Injector Control Circuit Open Test Status	—	OK	This parameter displays the status of the exhaust aftertreatment fuel injector control circuit. The parameter displays Malfunction if the exhaust aftertreatment fuel injector control circuit is open.
{ If equipped } Exhaust Aftertreatment Fuel Injector Control Circuit Shorted Test Status	—	OK	This parameter displays the status of the exhaust aftertreatment fuel injector control circuit. The parameter displays Malfunction if the exhaust aftertreatment fuel injector control circuit is shorted.
{ If equipped } Exhaust Aftertreatment Fuel Injector Control Driver Overtem-perature	—	No	This parameter displays if the Exhaust Aftertreatment Fuel Injector Control Driver (low side) has reached an overtemperature condition.
{ If equipped } Exhaust Aftertreatment Fuel Injector High Control Circuit High Voltage Test Status	—	OK	This parameter displays the status of the exhaust aftertreatment fuel injector high control circuit. The parameter displays Malfunction if the exhaust aftertreatment fuel injector high control circuit is shorted to voltage.

Parameter	System State	Expected Value	Description
{ If equipped } Exhaust Aftertreatment Fuel Injector High Control Circuit Low Voltage Test Status	—	OK	This parameter displays the status of the exhaust aftertreatment fuel injector high control circuit. The parameter displays Malfunction if the exhaust aftertreatment fuel injector high control circuit is shorted to ground.
{ If equipped } Exhaust Aftertreatment Fuel Injector High Control Driver Over-temperature	—	No	This parameter displays if the Exhaust Aftertreatment Fuel Injector High Control Driver (high side) has reached an overtempera-ture condition.
{ If equipped } Exhaust Aftertreatment Monitor Complete	—	No	This parameter displays the state of Exhaust Aftertreatment Monitor. The parameter displays Yes when the Exhaust Aftertreatment Monitor is complete.
{ If equipped } Exhaust Aftertreatment Monitor Complete This Ignition Cycle	—	No	This parameter displays the state of Exhaust Aftertreatment Monitor Complete This Ignition Cycle. The parameter displays Yes when the Exhaust Aftertreatment Monitor is Complete This Ignition Cycle.
{ If equipped } Exhaust Aftertreatment Monitor Enabled	—	No	This parameter displays the status of the Exhaust Aftertreatment Monitor. The parameter will display Yes when the Exhaust Aftertreat-ment Monitor is Enabled.
{ If equipped } Exhaust Aftertreatment Monitor Enabled This Ignition Cycle	—	No	This parameter displays the status of the Exhaust Aftertreatment Monitor Enabled This Ignition Cycle. The parameter will display Yes when the Exhaust Aftertreat-ment Monitor is Enabled This Ignition Cycle.
Exhaust Brake Switch	—	Off	This parameter displays the status of the Exhaust Brake Switch. The parameter will display On when the Exhaust Brake Switch is enabled.
Exhaust Gas Sensor Monitor Complete	—	Yes/No	This parameter displays the state of Exhaust Gas Sensor Monitor. The parameter displays Yes when the Exhaust Gas Sensor Monitor is complete.
Exhaust Gas Sensor Monitor Complete This Ignition Cycle	—	Yes/No	This parameter displays the state of Exhaust Gas Sensor Monitor Complete This Ignition Cycle. The parameter displays Yes when the Exhaust Gas Sensor Monitor is Complete This Ignition Cycle.
Exhaust Gas Sensor Monitor Enabled	—	Yes/No	This parameter displays the status of the Exhaust Gas Sensor Monitor. The parameter will display Yes when the Exhaust Gas Sensor Monitor is Enabled.
Exhaust Gas Sensor Monitor Enabled This Ignition Cycle	—	Yes/No	This parameter displays the status of the Exhaust Gas Sensor Monitor Enabled This Ignition Cycle. The parameter will display Yes when the Exhaust Gas Sensor Monitor is Enabled This Ignition Cycle.

Parameter	System State	Expected Value	Description
Exhaust Gas Temperature Sensor 1, 2, 3, 4, or 5	—	°C (°F)	This parameter will display the exhaust temperature before the DPF. When the exhaust temperature is low, the scan tool will display a low temperature. When the exhaust temperature is high, the scan tool will display a high temperature.
Exhaust Nitrogen Oxides Concentration High - Low Reductant Consumption Malfunction	—	Yes / No	This parameter displays Yes when excessive Nitrogen Oxides (NOx) are present in the exhaust, indicated by low reagent consumption.
Extended Travel Brake Pedal Position Signal	—	Released	This parameter displays the status of the Extended Travel Brake Pedal Position sensor.
Four Wheel Drive Crawl Mode	-—	Active / Inactive / Not Available	This parameter contains several signals associated with the status of the four wheel drive system.
Frozen Reductant – Diagnostic Inhibit	—	No	This parameter displays Yes if the reductant diagnostic is inoperative due to frozen reductant.
Frozen Reductant – Injection Inhibit	—	No	This parameter displays Yes if the reductant injection is inoperative due to frozen reductant.
Frozen Reductant – Refill Recognition Inhibit	—	No	This parameter displays Yes if the reductant refill monitor is inoperative due to frozen reductant.
Fuel Consumed Since Last DPF Regeneration	—	Liters/Gallons	This parameter displays the amount of fuel consumed since the last DPF regeneration.
Fuel Consumed Since Last DPF Replacement	—	Liters	This parameter displays the amount of Fuel Consumed Since Last DPF Replacement.
Fuel Consumption Rate	—	L/H	This parameter displays the amount of fuel consumed by engine per unit of time in liters per hour. NOTE: Engine Fuel Rate shall indicate zero L/H when the engine is not running.
Fuel Economy Mode Switch	Ignition ON	OK	This parameter displays the state of the fuel economy mode switch circuit. The parameter displays Malfunction if the fuel economy mode switch circuit is open.
Fuel Economy Mode Switch	Ignition ON	Volts	This parameter displays the economy mode switch refer-ence voltage.
Fuel Filter Life Remaining	—	%	This parameter displays the fuel filter life remaining before requiring an fuel filter change. This number is calculated by the control module based on many inputs and is displayed as a percent. The lower the percentage, the sooner the next fuel filter change will be required.
Fuel Filter Pressure Switch	—	OK	This parameter displays the status of the fuel filter pressure switch.
Fuel Heater Relay Command	—	Off	This parameter displays the status of the fuel relay heater command.

Parameter	System State	Expected Value	Description
Fuel Heater Relay Control Circuit High Voltage Test Status	—	OK	This parameter displays the status of the output driver for the fuel heater relay control circuit. The parameter displays Malfunction if the fuel heater relay control circuit is shorted to voltage.
Fuel Heater Relay Control Circuit Low Voltage Test Status	—	OK	This parameter displays the status of the output driver for the fuel heater relay control circuit. The parameter displays Malfunction if the fuel heater relay control circuit is shorted to ground.
Fuel Heater Relay Control Circuit Open Test Status	—	OK	This parameter displays the status of the output driver for the fuel heater relay control circuit. The parameter displays Malfunction if the fuel heater relay control circuit is open.
Fuel Injection Mode	—	Normal, Homogeneous Combustion Mode, Particulate Filter Regeneration with High Oxygen Concentration, Fuel Injection Small Quantity Learn, Fuel Injection Small Quantity Learn, Particulate Filter Regeneration with Low Oxygen Concentration, NOx Adsorber Catalyst Regeneration, Lean SOx Adsorber Catalyst Regeneration, Rich SOx Adsorber Catalyst Regeneration, Inhomogeneous Combustion Mode, NOx Catalyst Heating Mode 1, NOx Catalyst Heating Mode 2, Park or Neutral Gear DPF Regeneration, Rich Idle DPF Regeneration, Engine Protection High Oxygen Concentration DPF Regeneration, Engine Protection Low Oxygen Concentration DPF Regeneration, Engine Protection SOx Adsorber Catalyst Regeneration, NOx Catalyst Heating Mode 3, Fuel Injection Small Quantity Learn Combustion Mode, Hydrocarbon Purge Combustion Mode, Park or Neutral Gear Hydrocarbon Purge Combustion Mode, Reductant System Malfunction Warning Service Bay Test Warm Up Combustion Mode, Reductant System Malfunction Warning Service Bay Test Combustion Mode, SOx Purge Combustion Mode, Emissions Combustion Mode, Fast Exhaust System Warm-Up, Exhaust System Warm-Up	This parameter indicates which of the injection modes that currently is active.
Fuel Level Sensor	—	Volts	This parameter displays the voltage from the sensor used to monitor the fuel level inside the fuel tank.
Fuel Level Sensor Rear Tank	—	Volts	This parameter contains the unfiltered fuel level sensor analog input for the secondary fuel tank as a percentage of its reference voltage.

Parameter	System State	Expected Value	Description
Fuel Pressure Sensor	—	kPa (PSI)	For Port Fuel Injected (PFI) systems, this parameter displays undefaulted fuel rail pressure at the engine. For high pressure fuel systems, this parameter indicates the undefaulted low side fuel pressure before the high pressure pump.
Fuel Pressure Sensor	—	Volts	This parameter contains the fuel supply pressure sensor analog input as a percentage of its reference voltage.
Fuel Pressure Regulator 1 Command	—	%	This parameter displays the Fuel Pressure Regulator 1 duty cycle as commanded by the engine control module.
Fuel Pressure Regulator 1 Control Circuit Command	—	On/Off	This parameter displays the current command of the fuel pressure regulator 1.
Fuel Pressure Regulator 1 Control Circuit High Voltage Test Status	—	OK	This parameter displays the status of the output driver for the Fuel Pressure Regulator 1 Control Circuit High. The parameter displays Malfunction if the Fuel Pressure Regulator 1 Control Circuit High is shorted to voltage.
Fuel Pressure Regulator 1 Control Circuit Low Voltage Test Status	—	OK	This parameter displays the status of the output driver for the Fuel Pressure Regulator 1 Control Circuit High. The parameter displays Malfunction if the Fuel Pressure Regulator 1 Control Circuit High is shorted to ground.
Fuel Pressure Regulator 1 Control Circuit Open Test Status	—	OK	This parameter displays the status of the output driver for the Fuel Pressure Regulator 1 Control Circuit High. The parameter displays Malfunction if the Fuel Pressure Regulator 1 Control Circuit High is open.
Fuel Pressure Regulator 1 Control Circuit Shorted Test Status	—	OK	This parameter displays the status of the output driver for the Fuel Pressure Regulator 1 Control Circuit. The parameter displays Malfunction if the Fuel Pressure Regulator 1 Circuit is shorted.
Fuel Pressure Regulator 1 Control Driver Overtemperature	—	No	This parameter displays the state of the Fuel Pressure Regulator 1 Control Driver circuit. The parameter displays Yes if the Fuel Pressure Regulator 1 Control Driver Overtemperature is detected.
Fuel Pressure Regulator 1 Current	—	mA	This parameter displays the actual current for the Fuel Pressure Regulator 1.
Fuel Pressure Regulator 1 High Control Circuit Command	—	On	This parameter displays the status of the Fuel Pressure Regulator 1 High Control Circuit Command. The parameter displays ON when the Fuel Pressure Regulator 1 High Control Circuit is Commanded ON by the engine control module.

Parameter	System State	Expected Value	Description
Fuel Pressure Regulator 1 High Control Circuit High Voltage Test Status	—	OK	This parameter displays the state of the Fuel Pressure Regulator 1 High Control Circuit. The parameter displays Malfunction if the Fuel Pressure Regulator 1 High Control Circuit is shorted to voltage.
Fuel Pressure Regulator 1 High Control Circuit Low Voltage Test Status	—	OK	This parameter displays the state of the Fuel Pressure Regulator 1 High Control Circuit. The parameter displays Malfunction if the Fuel Pressure Regulator 1 High Control Circuit is shorted to ground.
Fuel Pressure Regulator 1 High Control Driver Overtemperature	—	No	This parameter displays the state of the Fuel Pressure Regulator 1 High Control Driver circuit. The parameter displays Yes if the Fuel Pressure Regulator 1 High Control Driver Overtemperature is detected.
Fuel Pressure Regulator 2 Command	—	%	This parameter displays the Fuel Rail Pressure Regulator 2 duty cycle.
Fuel Pressure Regulator 2 Control Circuit Command	—	On	This parameter displays the current command of the fuel pressure regulator 2.
Fuel Pressure Regulator 2 Control Circuit High Voltage Test Status	—	OK	This parameter displays the state of the Fuel Pressure Regulator 2 Control Circuit. The parameter displays Malfunction if the Fuel Pressure Regulator 2 Control Circuit is shorted to voltage.
Fuel Pressure Regulator 2 Control Circuit Low Voltage Test Status	—	OK	This parameter displays the state of the Fuel Pressure Regulator 2 Control Circuit. The parameter displays Malfunction if the Fuel Pressure Regulator 2 Control Circuit is shorted to ground.
Fuel Pressure Regulator 2 Control Circuit Open Test Status	—	OK	This parameter displays the state of the Fuel Pressure Regulator 2 Control Circuit. The parameter displays Malfunction if the Fuel Pressure Regulator 2 Control Circuit is open.
Fuel Pressure Regulator 2 Control Circuit Shorted Test Status	—	OK	This parameter displays the state of the Fuel Pressure Regulator 2 Control Circuit. The parameter displays Malfunction if the Fuel Pressure Regulator 2 Control Circuit is shorted.
Fuel Pressure Regulator 2 Control Driver Overtemperature	—	No	This parameter displays the state of the Fuel Pressure Regulator 2 High Control Driver circuit. The parameter displays Yes if the Fuel Pressure Regulator 2 High Control Driver Overtemperature is detected.
Fuel Pressure Regulator 2 High Control Circuit Command	—	On/Off	This parameter displays the status of the Fuel Pressure Regulator 2 High Control Circuit Command. The parameter displays On when the Fuel Pressure Regulator 2 High Control Circuit is Commanded ON by the engine control module.

Parameter	System State	Expected Value	Description
Fuel Pressure Regulator 2 High Control Circuit High Voltage Test Status	—	OK	This parameter displays the state of the Fuel Pressure Regulator 2 High Control Circuit. The parameter displays Malfunction if the Fuel Pressure Regulator 2 High Control Circuit is shorted to voltage.
Fuel Pressure Regulator 2 High Control Circuit Low Voltage Test Status	—	OK	This parameter displays the state of the Fuel Pressure Regulator 2 High Control Circuit. The parameter displays Malfunction if the Fuel Pressure Regulator 2 High Control Circuit is shorted to ground.
Fuel Pressure Regulator 2 High Control Driver Overtemperature	—	No	This parameter displays the state of the Fuel Pressure Regulator 2 High Control Driver circuit. The parameter displays Yes if the Fuel Pressure Regulator 2 High Control Driver Overtemperature is detected.
Fuel Pressure Sensor	Engine Idling	kPa/PSI	For Port Fuel Injected (PFI) systems, this Parameter displays fuel rail pressure at the engine. For high pressure fuel systems, this Parameter indicates the low side fuel pressure before the high pressure pump.
Fuel Pressure Sensor	Ignition ON	Volts	This parameter displays the fuel supply pressure sensor analog input as a percentage of its reference voltage.
Fuel Pump 2 Relay Command	Ignition ON	On / Off	This parameter contains several signals associated with the status of the fuel system
Fuel Pump 2 Relay Command	Ignition ON	On / Off	This parameter contains the commanded state of the secondary fuel pump output along with the status of its associated short to ground, open circuit, and short to power tests
Fuel Pump 2 Relay Control Circuit High Voltage Test Status	Ignition ON	OK, Malfunction, Not Run	This parameter contains the commanded state of the secondary fuel pump output along with the status of its associated short to ground, open circuit, and short to power tests
Fuel Pump 2 Relay Control Circuit Low Voltage Test Status	Ignition ON	OK, Malfunction, Not Run	This parameter contains the commanded state of the secondary fuel pump output along with the status of its associated short to ground, open circuit, and short to power tests
Fuel Pump 2 Relay Control Circuit Open Test Status	Ignition ON	OK, Malfunction, Not Run	This parameter contains the commanded state of the secondary fuel pump output along with the status of its associated short to ground, open circuit, and short to power tests
Fuel Pump Driver Control Module Battery Voltage	Ignition ON	Volts	This parameter contains the Fuel Tank Zone Module's (FTZM) sensed battery voltage that's being transmitted from FTZM to the ECM over serial data

Parameter	System State	Expected Value	Description
Fuel Pump Driver Control Module Voltage Signal	Ignition ON	Volts	This parameter contains the Fuel Tank Zone Module's (FTZM) sensed Run/Crank voltage that's being transmitted from FTZM to the ECM over serial data.
Fuel Pump Enable Circuit High Voltage Test Status	Ignition ON	OK	This parameter displays the status of the output driver for the fuel pump control circuit. The scan tool will display OK if the circuit is operating correctly or Not Run if a diagnosis has not been made. The scan tool will display Malfunction if there is an short to voltage in the circuit.
Fuel Pump Enable Circuit Low Voltage Test Status	Ignition ON	OK	This parameter displays the status of the output driver for the fuel pump control circuit. The scan tool will display OK if the circuit is operating correctly or Not Run if a diagnosis has not been made. The scan tool will display Malfunction if there is an short to ground in the circuit.
Fuel Pump Enable Command	Ignition ON	On	This parameter displays the commanded state of the fuel pump output (the output is considered to be commanded ON if its duty cycle is not zero).
Fuel Pump Phase U-V-W Circuits High Voltage Test Status	Ignition ON	OK, Malfunction, Not Run	This parameter contains the Fuel Tank Zone Module's (FTZM) reported status of short to ground, open circuit, short to power and phase-to-phase short tests
Fuel Pump Phase U-V-W Circuits Low Voltage Test Status	Ignition ON	OK, Malfunction, Not Run	This parameter contains the Fuel Tank Zone Module's (FTZM) reported status of short to ground, open circuit, short to power and phase-to-phase short tests
Fuel Pump Phase U-V-W Circuits Open Test Status	Ignition ON	OK, Malfunction, Not Run	This parameter contains the Fuel Tank Zone Module's (FTZM) reported status of short to ground, open circuit, short to power and phase-to-phase short tests
Fuel Pump Phase U-V-W Circuits Shorted Test Status	Ignition ON	OK, Malfunction, Not Run	This parameter contains the Fuel Tank Zone Module's (FTZM) reported status of short to ground, open circuit, short to power and phase-to-phase short tests
Fuel Pump Relay Command	—	On	This parameter displays the commanded state of the fuel pump relay control circuit. The fuel pump relay should be On when the scan tool indicates the Fuel Pump Relay Command is ON. The fuel pump relay should be Off when the scan tool indicates the Fuel Pump Relay Command is OFF.
Fuel Pump Relay Control Circuit High Voltage Test Status	—	OK	This parameter displays the state of the Fuel Pump Relay Control Circuit. The parameter displays Malfunction if the Fuel Pump Relay Control Circuit is shorted to voltage.

Parameter	System State	Expected Value	Description
Fuel Pump Relay Control Circuit Low Voltage Test Status	—	OK	This parameter displays the state of the Fuel Pump Relay Control Circuit. The parameter displays Malfunction if the Fuel Pump Relay Control Circuit is shorted to ground.
Fuel Pump Relay Control Circuit Open Test Status	—	OK	This parameter displays the state of the Fuel Pump Relay Control Circuit. The parameter displays Malfunction if the Fuel Pump Relay Control Circuit is open.
Fuel Pump Speed	Ignition ON	RPM	This parameter contains the fuel pump speed as sensed by the FTZM (Fuel Tank Zone Module).
Fuel Pump Speed Command	Ignition ON	RPM	This parameter contains the fuel pump commanded speed determined by the ECM and the speed to which the FTZM (Fuel Tank Zone Module) electronically commutates the brushless fuel pump.
Fuel Pump Speed Too High	Ignition ON	Yes / No	This parameter contains signals used within the Fuel Pump Speed Rationality Diagnostic (PSRD).
Fuel Pump Speed Too Low	Ignition ON	Yes / No	This parameter contains signals used within the Fuel Pump Speed Rationality Diagnostic (PSRD).
Fuel Pump Trim	Engine Running	0–4 %	This parameter displays the adjustments for the fuel pump duty cycle control. This is calculated by comparing the estimated fuel rail pressure to the desired fuel rail pressure. If the short term fuel pump trim consistently deviates from 0, the long term fuel pump trim is adjusted accordingly.
Fuel Rail Pressure Regulator 1 Command	Ignition ON	%	This parameter contains the commanded duty cycle for the fuel pressure regulator 1 solenoid output.
Fuel Rail Pressure Sensor	—	35–40 MPa (5076–5801 psi)	This parameter displays the fuel rail pressure as calculated by the control module. This value is calculated based on engine speed, engine load, and sensor inputs. The scan tool will display a higher value at higher engine speeds and loads, and a lower value at idle.
Fuel Rail Pressure Sensor	—	Volts	This parameter displays the voltage signal sent to the control module from the sensor used to measure the fuel rail pressure. The scan tool will display a low voltage at idle and high voltage when pressure demands are high.
Fuel Rail Temperature Sensor	—	°C (°F)	This parameter displays the current fuel rail temperature.
Fuel System Monitor Complete	—	Yes	This parameter displays the status of the Fuel System Monitor. The scan tool displays Yes when test is completed.

Parameter	System State	Expected Value	Description
Fuel System Monitor Complete This Ignition Cycle	—	Yes	This parameter displays the state of the Fuel System Monitor Complete This Ignition Cycle. The parameter displays Yes when the Fuel System Monitor is Complete This Ignition Cycle.
Fuel System Monitor Enabled	—	Yes	This parameter displays the status of the Fuel System Monitor. The parameter will display Yes when the Fuel System Monitor is Enabled.
Fuel System Monitor Enabled This Ignition Cycle	—	Yes/No	This parameter displays the status of the Fuel System Monitor Enabled This Ignition Cycle. The parameter will display Yes when the Fuel System Monitor is Enabled This Ignition Cycle.
Fuel Tank Rated Capacity	—	Liters	This parameter displays the capacity of the fuel tank in liters or gallons. The rated capacity displayed by the scan tool will vary with vehicle type.
Fuel Temperature Sensor	—	°C (°F)	This parameter displays the current fuel temperature as calculated by the control module based on input from the fuel temperature sensor. The scan tool will display a higher value at higher fuel temperatures. The scan tool will display a lower value at lower fuel temperatures.
Fuel Trim	—	Mm3/stk	This parameter displays the Fuel Mass Observer (FMO) correction value.
Fuel Trim	—	Allowed	This parameter displays the status of the Fuel Mass Observer (FMO) system.
Fuel Trim Enabled	—	Yes	This parameter indicates that the fuel mass observer functionality is enabled.
Fuel Trim Learn	—	Enabled	This parameter displays the status of the Fuel Mass Observer (FMO) system.
Fuel Used Since Last DPF Regeneration	—	Liters/Gallons	This parameter will display the amount of fuel used since last regeneration of the exhaust particulate filter.
Generator F-Terminal Signal	—	0–100%	This parameter indicates the generator field duty cycle as commanded by the voltage regulator or control module. The scan tool will display a higher value for a higher commanded generator output, and a lower value for a lower commanded generator output.
Generator L-Terminal Circuit High Voltage Test Status	—	OK	This parameter displays the diagnostic state of the Generator L-Terminal circuit. The scan tool will display OK, Incomplete, Short B+/ Open, Short Gnd. The scan tool will display OK if the circuit is operating correctly.

Parameter	System State	Expected Value	Description
Generator L-Terminal Circuit Low Voltage Test Status	—	OK	This parameter displays the diagnostic state of the Generator L-Terminal circuit. The scan tool will display OK, Incomplete, Short B+/ Open, Short Gnd. The scan tool will display OK if the circuit is operating correctly.
Generator L-Terminal Circuit Open Test Status	—	OK	This parameter displays the diagnostic state of the Generator L-Terminal circuit. The scan tool will display OK, Incomplete, Short B+/ Open, Short Gnd. The scan tool will display OK if the circuit is operating correctly.
Generator L-Terminal Command	—	0–100%	This parameter displays the control modules commanded state of the voltage regulator on the generator.
Generator L-Terminal Signal Command	—	On/Off	This parameter displays the signal command of the Generator L-Terminal.
Glow Plug Command	—	On/Off	This parameter displays the voltage supply to the glow plugs as measured by the control module. The scan tool will display a higher value at high voltages, or a lower value at lower voltages.
High Idle Speed	—	Enabled/Disabled	This parameter displays the current state of the High Idle Speed.
HO2S 1	—	Lambda	This parameter displays the actual lambda signal measured by wide range oxygen sensor 1 bank 1.
H02S 1 Heater Command	—	On/Off	This parameter displays the current command of the oxygen sensor heater control.
H02S 1 Heater Command	—	%	This parameter displays the current command of the oxygen sensor heater control in percentage.
H02S 1 Heater Control Circuit High Voltage Test Status	—	OK	This parameter displays the state of the oxygen sensor heater control circuit. The parameter displays Malfunction if the oxygen sensor heater control circuit is shorted to voltage.
H02S 1 Heater Control Circuit Low Voltage Test Status	—	OK	This parameter displays the state of the oxygen sensor heater control circuit. The parameter displays Malfunction if the oxygen sensor heater control circuit is shorted to ground.
H02S 1 Heater Control Circuit Open Test Status	—	OK	This parameter displays the state of the oxygen sensor heater control circuit. The parameter displays Malfunction if the oxygen sensor heater control circuit is open.
H02S 1 Module Signal	—	Volts	This parameter displays the current voltage of the oxygen sensor heater module signal circuit.

Parameter	System State	Expected Value	Description
IAT Sensor 1	—	°C (°F)	This parameter displays the temperature of the air entering the engine as calculated by the control module based on the input from the intake air temperature (IAT) sensor. The scan tool will display a low value when the air temperature is low, and a high value when the air temperature is high.
IAT Sensor 2	—	°C (°F)	This parameter displays the temperature of the air entering the engine as calculated by the control module based on the input from the intake air temperature (IAT) sensor 2. The scan tool will display a low value when the air temperature is low, and a high value when the air temperature is high.
IAT Sensor 2	—	Hz	This parameter displays the frequency of the humidity sensors' intake air temperature (IAT) sensor input to the engine control module.
IAT Sensor 3	—	°C (°F)	This parameter displays the temperature of the air entering the engine as calculated by the control module based on the input from the intake air temperature (IAT) sensor 3. The scan tool will display a low value when the air temperature is low, and a high value when the air temperature is high.
Ignition 1 Signal	—	On/Off	This parameter displays On when the control module detects B+ voltage at the ignition 1 input terminal.
Ignition Accessory Signal	—	Off	This parameter displays the state of the ignition 0 input to the control module from the ignition switch. The scan tool will display On when the ignition switch is in the ignition accessory position. The scan tool will display Off when the ignition switch is in any other position.
Ignition Cycles with Malfunction Since 1st Malfunction	—	Counts	This parameter displays the number of ignition cycles with a malfunction detected since the first ignition cycle with a malfunction detected.
Ignition Cycles without Completed Test Since 1st Malfunction	—	Counts	This parameter displays the number of ignition cycles without a pass or a malfunction reported since the first ignition cycle with a malfunction reported.
Ignition Cycles without Malfunction Since Last Malfunction	—	Counts	This parameter displays the number of ignition cycles with a pass reported and no malfunctions reported since the first ignition cycle with a malfunction reported.
Immobilizer Auto Learn Counter	—	Counts	This parameter displays the number of auto learn cycles that have been successfully completed within the immobilizer system.

Parameter	System State	Expected Value	Description
Immobilizer Automatic Learn Timer	—	hh:mm:ss	This parameter indicates that either the auto learn timer (used in the auto learn procedure to enable VTD password learning) or the seed and key timer (used in the seed and key procedure to enable VTD password learning) is active.
Immobilizer Password Learn	—	Disabled	This indicates learning of the Immobilizer password received from the platform electronics is enabled. Immobilizer password learning is first enabled in assembly plant (prior to the manufacturer's enable counter being set to zero) may be re-enabled using 1 of 2 procedures.
Immobilizer Password Learn Scan Tool Delay	—	Active/Inactive	Scan Tool Learn Delay Active indicates that the security code has been accepted but the scan tool learn delay is active and will not allow learning enabled, programming security code, or resetting security code.
Immobilizer Security Code Accepted	—	Yes	This parameter displays if the Immobilizer Security code was accepted by the ECM.
Immobilizer Security Code Function	—	Present	This parameter displays if the immobilizer security code was supported by the ECM.
Immobilizer Security Code Lockout	—	Inactive	This parameter displays if the Immobilizer Security code is locked out of the ECM.
Immobilizer Security Code Programmed	—	Yes	This parameter displays if the Immobilizer Security code is currently being programmed in the ECM.
Immobilizer Security Information Programmed	—	Yes	This parameter displays if the Immobilizer Security code has been programmed in the ECM.
Immobilizer System Status	—	Varies	This parameter displays the Immobilizer System status in the BCM.
Immobilizer Valid Response Received Time	—	ms	This parameter displays the actual time observed for a valid immobilizer response.
Induction System Leak Indication	—	:1	This parameter contains the ratio of desired intake air flow and the actual intake air flow as determined by the mass air flow (MAF) sensor.
Injector Timing	—	°	Indicates the current timing of the main injection pulse as calculated by the control module. The scan tool will display a higher value for a main injection event farther from top dead center (TDC). The Scan tool will display a lower value for a main injection event closer to TDC.
Inspection/Maintenance Drive Cycle Complete	—	No	Inspection/Maintenance Drive Cycle Complete means that all required components of the standard drive cycle have completed.

Parameter	System State	Expected Value	Description
Inspection/Maintenance Drive Cycle Idle Time Complete	—	No	Inspection/Maintenance Drive Cycle Idle Time Complete indicates that the engine idle time requirement is complete.
Inspection/Maintenance Drive Cycle Idle Timer	—	hh:mm:ss	This parameter displays the Inspection/Maintenance Drive Cycle Idle Timer.
Inspection/Maintenance Drive Cycle Propulsion System Active Time Complete	—	No	This parameter displays the Inspection/Maintenance Drive Cycle Propulsion System Active Time Complete. The parameter displays Yes when the Inspection/ Maintenance Drive Cycle Propulsion System Active Time is Complete.
Inspection/Maintenance Drive Cycle Propulsion System Active Timer	—	hh:mm:ss	This parameter displays the total accumulated time in which the propulsion system has been active after the 1st time the engine is started.
Inspection/Maintenance Drive Cycle Vehicle Speed Time Complete	—	No	This parameter displays Yes when the Vehicle Speed Time Complete indicates that the vehicle has been above 25 mph for five minutes.
Inspection/Maintenance Drive Cycle Vehicle Speed Timer	—	hh:mm:ss	This parameter displays the total accumulated time in which the vehicle speed has been greater than 25 mph after the 1st time the engine is started.
Intake Air Flow Valve Control Circuit 1 High Voltage Test Status	—	OK	This parameter displays the status of the Intake Air Flow Valve Control Circuit 1 output driver. The scan tool will display OK if the circuit is operating correctly or Not Run if a diagnosis has not been made. The scan tool will display Malfunction if there is a short to voltage in the circuit.
Intake Air Flow Valve Control Circuit 1 Low Voltage Test Status	—	OK	This parameter displays the status of the Intake Air Flow Valve Control Circuit 1 output driver. The scan tool will display OK if the circuit is operating correctly or Not Run if a diagnosis has not been made. The scan tool will display Malfunction if there is a short to ground in the circuit.
Intake Air Flow Valve Control Circuit 2 High Voltage Test Status	—	OK	This parameter displays the status of the Intake Air Flow Valve Control Circuit 2 output driver. The scan tool will display OK if the circuit is operating correctly or Not Run if a diagnosis has not been made. The scan tool will display Malfunction if there is a short to voltage in the circuit.
Intake Air Flow Valve Control Circuit 2 Low Voltage Test Status	—	OK	This parameter displays the status of the Intake Air Flow Valve Control Circuit 2 output driver. The scan tool will display OK if the circuit is operating correctly or Not Run if a diagnosis has not been made. The scan tool will display Malfunction if there is a short to ground in the circuit.

Parameter	System State	Expected Value	Description
Intake Air Flow Valve Control Circuit Open Test Status	—	OK	This parameter displays the status of the Intake Air Flow Valve Control Circuit. The scan tool will display OK if the circuit is operating correctly or Not Run if a diagnosis has not been made. The scan tool will display Malfunction if there is an open in the circuit.
Intake Air Flow Valve Control Circuit Shorted Test Status	—	OK	This parameter displays the status of the Intake Air Flow Valve Control Circuit. The scan tool will display OK if the circuit is operating correctly or Not Run if a diagnosis has not been made. The scan tool will display Malfunction if there is a short in the circuit.
Intake Air Flow Valve Control Driver Overcurrent	—	No	This parameter displays the status of the Intake Air Flow Valve Control driver. The scan tool will display Yes when an overcurrent is detected.
Intake Air Flow Valve Control Driver Overtemperature	—	No	This parameter displays the status of the Intake Air Flow Valve Control driver. The scan tool will display Yes when overtemperature is detected.
Intake Air Flow Valve Control Driver Temperature Dependent Overcurrent	—	No	This parameter displays the status of the Intake Air Flow Valve Control driver. The scan tool will display Yes when Temperature Dependent Overcurrent is detected.
Intake Air Flow Valve Control Driver Undervoltage	—	No	This parameter displays the status of the Intake Air Flow Valve Control driver. The scan tool will display Yes when Undervoltage is detected.
Intake Air Flow Valve Learned Closed Position	—	%	This parameter displays the minimum position learned for Intake Air Flow Valve position sensor when the Intake Air Flow Valve is closed.
Intake Air Flow Valve Motor Command	—	%	This parameter displays the commanded duty cycle for the Intake Airflow Valve output.
Intake Air Flow Valve Position	—	%	This parameter displays the position determined from Intake Air Flow Valve position sensor (corrected based upon its learned minimum position).
Intake Air Flow Valve Position Sensor	—	Volts	This parameter displays the Intake Air Flow Valve position sensor voltage input.
Intake Air Heater Command	—	On/Off	This parameter displays the current status of the Intake Air Heater.
Intake Air Heater Command	—	%	This parameter displays the current status of the Intake Air Heater in percentage.
Intake Air Humidity Sensor	—	%	This parameter displays the percentage of humidity at the intake air sensor.

Parameter	System State	Expected Value	Description
Intake Manifold Pressure	—	kPa	This parameter displays the engine intake manifold vacuum pressure calculated as the difference between ambient air pressure (barometric pressure) and intake manifold absolute pressure (MAP).
Intake Manifold Runner Control Valve Command	—	%	This parameter displays the current command in percentage of the intake manifold runner control valve.
Intake Manifold Runner Control Valve Diagnostic Test Status	—	Varies	This parameter displays the current phase of the intake manifold runner control valve diagnostic test.
Intake Manifold Runner Control Valve Feedback Signal	—	%	This parameter displays the current command in percentage of the intake manifold runner control valve feedback signal.
Intake Manifold Runner Control Valve Position	—	Open, Intermediate, Closed	This parameter displays the current position of the intake manifold runner control valve.
Intake/Single Camshaft Position Active Counter	—	Counts	This parameter displays an incrementing counter when the control module receives a signal from the camshaft position sensor.
Intake/Single Camshaft Position Sensor	Engine Idling	0 RPM	This parameter displays the speed of the engine as calculated by the signal from a camshaft position (CMP) sensor. This parameter will always display 0 unless a condition with the CKP sensor or CKP reluctor exists. If a CKP condition exists the control module will use a valid CMP sensor signal to determine engine speed and crank/camshaft position.
Lost Communication with NOX Sensor - Engine Malfunction	—	Yes / No	This parameter displays Yes if the engine controller lost serial data communication with NOx Sensor A.
Lost Communication with NOX Sensor - Post Catalytic Converter Malfunction	—	Yes / No	This parameter displays Yes if the engine controller lost serial data communication with NOx Sensor B (post catalyst NOx sensor)
Lost Communication with NOX Sensor - Post Catalytic Converter 2 Malfunction	—	Yes / No	This parameter displays Yes if the engine controller lost serial data communication with NOx Sensor C.
Low Engine Oil Level Indicator Command	—	Off	This parameter displays the Engine Oil Level Low Indicator Command. The scan tool displays ON in order to inform the driver of a low engine oil level condition.
Low Engine Oil Pressure Indicator Command	—	Off	This parameter displays the Low Engine Oil Indicator Command. The scan tool displays ON in order to inform the driver of a low engine oil pressure condition.
MAF Sensor	Engine Idling	6–20 g/s	This parameter indicates the quantity calculated by the control module based on a signal from the MAF sensor. The scan tool will display a high value at high engine speeds, and a low value at low engine speeds.
	Engine speed at 2,500 RPM	130–150 g/s	

Parameter	System State	Expected Value	Description
MAF Sensor	—	2300–3100 Hz	This parameter indicates the frequency signal received from the MAF sensor by the control module. The scan tool will display a high value at high engine speeds, and a low value at low engine speeds.
MAF When Engine Overspeed Detected	Engine Idling	g/s	This parameter indicates the quantity calculated by the control module based on a signal from the MAF sensor at the time an overspeed was detected.
Main-Injection	—	Inactive	Main Injection Active indicates that main injection is active.
MAP Sensor	—	0.95–1.06 Volts	This parameter indicates the voltage signal received by the control module from the MAP sensor. The scan tool displays a low voltage at idle, and a high voltage at wide open throttle. Barometric pressure and altitude can affect these values.
MAP Sensor	—	kPa/PSI	This parameter displays the actual engine intake manifold absolute pressure (MAP).
MIL Command	—	Off	This parameter displays the commanded state of the malfunction indicator lamp (MIL) control circuit by the engine control module.
MIL Control Circuit High Voltage Test Status	—	OK	This parameter displays the state of the MIL control circuit. The parameter displays Malfunction if the MIL control circuit is shorted to voltage.
MIL Control Circuit Low Voltage Test Status	—	OK	This parameter displays the state of the MIL control circuit. The parameter displays Malfunction if the MIL control circuit is shorted to ground.
MIL Control Circuit Open Test Status	—	OK	This parameter displays the state of the MIL control circuit. The parameter displays Malfunction if the MIL control circuit is open.
MIL Requested	—	No	This parameter displays the commanded state of the malfunction indicator lamp (MIL) control circuit by the engine control module.
MIL Requested by DTC	—	No	This parameter indicates the reason the control module illuminated the MIL. The scan tool will display Yes when the MIL is requested as a result of an A or B type DTC. The scan tool will display No if the MIL is illuminated for another reason, such as transmission DTCs.
Misfire Diagnostic Engine Speed	Engine Idling	RPM	This parameter displays the engine speed used within the misfire diagnostic. This engine speed is the maximum engine speed observed over the previous engine cycle.

Parameter	System State	Expected Value	Description
Misfire Monitor Complete	—	No	This parameter displays the status of the Misfire Monitor. The parameter will display Yes when the Misfire Monitor is Complete.
Misfire Monitor Complete This Ignition Cycle	—	Varies	This parameter displays the diagnostic monitor enable status during the current driving/ monitoring cycle.
Misfire Monitor Enabled	—	No	This parameter displays the status of the Misfire Monitor. The parameter will display Yes when the Misfire Monitor is Enabled.
Misfire Monitor Enabled This Ignition Cycle	—	Varies	This parameter displays the diagnostic monitor enable status during the current driving/ monitoring cycle.
Neutral Position Sensor	—	%	This parameter displays the current state of the neutral position sensor in degrees.
Nitrogen Oxides Catalytic Converter Efficiency Gross Error Test	—	%	This parameter displays the measured average Selective Catalyst Reduction (SCR) efficiency for urea quality determination during the gross error test.
Nitrogen Oxides Catalytic Converter Efficiency Small Error Test Variation	—	%	This parameter displays the Selective Catalyst Reduction (SCR) efficiency urea quality deviation during the small error test.
Nitrogen Oxides Catalytic Converter Efficiency Small Error Test Threshold	—	%	This parameter displays the Selective Catalyst Reduction (SCR) efficiency urea quality deviation threshold which triggers fast adaptation.
Nitrogen Oxides Catalytic Converter Reductant Load	—	g	This parameter contains the NH3 (Ammonia) storage in the Selective Catalyst (SCR) Reduction system in terms of grams.
Nitrogen Oxides Catalytic Converter Reductant-Load Adaptive Value	—	#	This parameter displays the SCR long term adaptation factor.
Nitrogen Oxides Catalytic Converter System Malfunction Warning Indicator Command	—	Warning Level 1–7	This parameter displays the Non-Tamper Selective Catalyst Reduction (SCR) warning command.
Nitrogen Oxides Sensor Circuit Malfunction	—	Yes / No	This parameter displays the state of the Nitrogen Oxides (NOx) Sensor 1 Circuit. The parameter displays Malfunction if the Bank 1 Sensor 1 circuit is open or shorted.
Nitrogen Oxides Sensor Heater Control Circuit Malfunction	—	Yes / No	This parameter displays the state of the Nitrogen Oxides (NOx) Sensor 1 Heater Control Circuit. The parameter displays Malfunction if the Heater Circuit is open or shorted.
Nitrogen Oxides Sensor Heater Feedback Circuit Malfunction	—	Yes / No	This parameter displays the state of the Nitrogen Oxides (NOx) Sensor 1 Heater Feedback Circuit. The parameter displays Malfunction if the heater feedback circuit is open or shorted.

Parameter	System State	Expected Value	Description
Nitrogen Oxides Sensor Heater Ground Circuit Malfunction	—	Yes / No	This parameter displays the state of the Nitrogen Oxides (NOx) Sensor 1 Heater Ground Circuit. The parameter displays Malfunction if the heater ground circuit is open or shorted.
Nitrogen Oxides Sensor Heater Supply Voltage Circuit Malfunction	—	Yes / No	This parameter displays the state of the Nitrogen Oxides (NOx) Sensor 1 Heater Supply Voltage Circuit. The parameter displays Malfunction if the heater supply voltage circuit is open or shorted.
Nitrogen Oxides Emissions Monitor Efficiency	—	%	This parameter displays the measured nitrogen oxides emissions monitor efficiency.
Nitrogen Oxides Emissions Warning Indicator	—	0–15	This parameter displays the nitrogen oxides emissions too high warning level.
Nitrogen Oxides Sensor Heater Control Circuit High Test Status	—	Okay / Malfunction / Not Run	The parameter displays Malfunction if the nitrogen oxides sensor heater supply circuit is shorted high.
Nitrogen Oxides Sensor Heater Control Circuit Low Test Status	—	Okay / Malfunction / Not Run	The parameter displays Malfunction if the nitrogen oxides sensor heater supply circuit is shorted low.
Nitrogen Oxides Sensor Heater Control Circuit Open Test Status	—	Okay / Malfunction / Not Run	The parameter displays Malfunction if the nitrogen oxides sensor heater supply circuit is shorted open.
Nitrogen Oxides Sensor Heater Feedback Circuit High Test Status	—	Okay / Malfunction / Not Run	The parameter displays Malfunction if the nitrogen oxides sensor temperature circuit is shorted high.
Nitrogen Oxides Sensor Heater Feedback Circuit Low Test Status	—	Okay / Malfunction / Not Run	The parameter displays Malfunction if the nitrogen oxides sensor temperature circuit is shorted low.
Nitrogen Oxides Sensor Heater Feedback Circuit Open Test Status	—	Okay / Malfunction / Not Run	The parameter displays Malfunction if the nitrogen oxides sensor temperature circuit is open.
Nitrogen Oxides Sensor Heater Ground Circuit High Test Status	—	Okay / Malfunction / Not Run	The parameter displays Malfunction if the nitrogen oxides sensor heater feedback circuit is shorted high.
Nitrogen Oxides Sensor Heater Ground Circuit Low Test Status	—	Okay / Malfunction / Not Run	The parameter displays Malfunction if the nitrogen oxides sensor heater feedback circuit is shorted low.
Nitrogen Oxides Sensor Heater Ground Circuit Open Test Status	—	Okay / Malfunction / Not Run	The parameter displays Malfunction if the nitrogen oxides sensor heater feedback circuit is open.
Nitrogen Oxides Sensor Heater Mode	—	Varies	This parameter displays the status of the nitrogen oxides sensor heater.
Nitrogen Oxides Sensor Heater Operation	—	Allowed / Not Allowed	This parameter displays the state of the nitrogen oxides sensor heater operation. The parameter displays Allowed when commanded by the engine control module.
Nitrogen Oxides Sensor Heater Resistance	—	Ω	This parameter displays the resistance value of the nitrogen oxides sensor 1 heater.
Nitrogen Oxides Sensor Nitrogen Oxides Concentration	—	ppm	This parameter displays the concentration of nitrogen oxides in the exhaust gas detected by nitrogen oxides sensor 1.

Parameter	System State	Expected Value	Description
Nitrogen Oxides Sensor Signal Circuit High Test Status	—	Okay / Malfunction / Not Run	The parameter displays Malfunction if the nitrogen oxides sensor signal circuit is shorted high.
Nitrogen Oxides Sensor Signal Circuit Low Test Status	—	Okay / Malfunction / Not Run	The parameter displays Malfunction if the nitrogen oxides sensor signal circuit is shorted low.
Nitrogen Oxides Sensor Signal Circuit Malfunction	—	Yes / No	This parameter displays the state of the Nitrogen Oxides (NOx) Sensor Signal Circuit. The parameter displays Malfunction if the sensor signal circuit is open or shorted.
Nitrogen Oxides Sensor Signal Circuit Open Test Status	—	Okay / Malfunction / Not Run	The parameter displays Malfunction if the nitrogen oxides sensor signal circuit is open.
Nitrogen Oxides Sensor Oxygen Concentration	—	%	This parameter displays the concentration of Oxygen in the exhaust gas from nitrogen oxides sensor 1.
Nitrogen Oxides Catalytic Converter 2 Efficiency	—	%	This parameter displays the measured Selective Catalyst Reduction 2 (SCR2) efficiency.
Nitrogen Oxides Catalytic Converter 2 Efficiency During Particulate Filter Regeneration	—	%	This parameter displays the Selective Catalyst Reduction 2 (SCR2) efficiency monitor estimated average efficiency during particulate filter regeneration.
Nitrogen Oxides Sensor 2 Circuit Malfunction	—	Yes / No	This parameter displays the state of the Nitrogen Oxides (NOx) Sensor 2 Circuit. The parameter displays Malfunction if the Bank 1 Sensor 2 circuit is open or shorted.
Nitrogen Oxides Sensor 2 Heater Control Circuit High Test Status	—	Okay / Malfunction / Not Run	The parameter displays Malfunction if the nitrogen oxides sensor 2 heater supply circuit is shorted high.
Nitrogen Oxides Sensor 2 Heater Control Circuit Low Test Status	—	Okay / Malfunction / Not Run	The parameter displays Malfunction if the nitrogen oxides sensor 2 heater supply circuit is shorted low.
Nitrogen Oxides Sensor 2 Heater Control Circuit Malfunction	—	Yes / No	This parameter displays the state of the Nitrogen Oxides (NOx) Sensor 2 Heater Control Circuit. The parameter displays Malfunction if the heater control circuit is open or shorted.
Nitrogen Oxides Sensor 2 Heater Control Circuit Open Test Status	—	Okay / Malfunction / Not Run	The parameter displays Malfunction if the nitrogen oxides sensor 2 heater supply circuit is shorted open.
Nitrogen Oxides Sensor 2 Heater Feedback Circuit High Test Status	—	Okay / Malfunction / Not Run	The parameter displays Malfunction if the nitrogen oxides sensor 2 temperature circuit is shorted high.
Nitrogen Oxides Sensor 2 Heater Feedback Circuit Low Test Status	—	Okay / Malfunction / Not Run	The parameter displays Malfunction if the nitrogen oxides sensor 2 temperature circuit is shorted low.
Nitrogen Oxides Sensor 2 Heater Feedback Circuit Malfunction	—	Yes / No	This parameter displays the state of the Nitrogen Oxides (NOx) Sensor 2 Heater Feedback Circuit. The parameter displays Malfunction if the heater feedback circuit is open or shorted.

Parameter	System State	Expected Value	Description
Nitrogen Oxides Sensor 2 Heater Feedback Circuit Open Test Status	—	Okay / Malfunction / Not Run	The parameter displays Malfunction if the nitrogen oxides sensor 2 temperature circuit is open.
Nitrogen Oxides Sensor 2 Heater Ground Circuit High Test Status	—	Okay / Malfunction / Not Run	The parameter displays Malfunction if the nitrogen oxides sensor 2 heater feedback circuit is shorted high.
Nitrogen Oxides Sensor 2 Heater Ground Circuit Low Test Status	—	Okay / Malfunction / Not Run	The parameter displays Malfunction if the nitrogen oxides sensor 2 heater feedback circuit is shorted low.
Nitrogen Oxides Sensor 2 Heater Ground Circuit Malfunction	—	Yes / No	This parameter displays the state of the Nitrogen Oxides (NOx) Sensor 2 Heater Ground Circuit. The parameter displays Malfunction if the heater ground circuit is open or shorted.
Nitrogen Oxides Sensor 2 Heater Ground Circuit Open Test Status	—	Okay / Malfunction / Not Run	The parameter displays Malfunction if the nitrogen oxides sensor 2 heater feedback circuit is open.
Nitrogen Oxides Sensor 2 Heater Mode	—	Varies	This parameter displays the status of the nitrogen oxides sensor 2 heater.
Nitrogen Oxides Sensor 2 Heater Operation	—	Allowed / Not Allowed	This parameter displays the state of the nitrogen oxides sensor 2 heater operation. The parameter displays Allowed when commanded by the engine control module.
Nitrogen Oxides Sensor 2 Heater Resistance	—	Ω	This parameter displays the resistance value of the nitrogen oxides sensor 2 heater.
Nitrogen Oxides Sensor 2 Heater Supply Voltage Circuit Malfunction	—	Yes / No	This parameter displays the state of the Nitrogen Oxides (NOx) Sensor 2 Heater Supply Voltage Circuit. The parameter displays Malfunction if the heater supply voltage circuit is open or shorted.
Nitrogen Oxides Sensor 2 Nitrogen Oxides Concentration	—	ppm	This parameter displays the concentration of nitrogen oxides in the exhaust gas detected by nitrogen oxides sensor 2.
Nitrogen Oxides Sensor 2 Signal Circuit High Test Status	—	Okay / Malfunction / Not Run	The parameter displays Malfunction if the nitrogen oxides sensor 2 signal circuit is shorted high.
Nitrogen Oxides Sensor 2 Signal Circuit Low Test Status	—	Okay / Malfunction / Not Run	The parameter displays Malfunction if the nitrogen oxides sensor 2 signal circuit is shorted low.
Nitrogen Oxides Sensor 2 Signal Circuit Malfunction	—	Yes / No	This parameter displays the state of the Nitrogen Oxides (NOx) Sensor 2 Signal Circuit. The parameter displays Malfunction if the signal circuit is open or shorted.
Nitrogen Oxides Sensor 2 Signal Circuit Open Test Status	—	Okay / Malfunction / Not Run	The parameter displays Malfunction if the nitrogen oxides sensor 2 signal circuit is open.
Nitrogen Oxides Sensor 2 Oxygen Concentration	—	%	This parameter displays the concentration of Oxygen in the exhaust gas from nitrogen oxides sensor 2.

Parameter	System State	Expected Value	Description
Nitrogen Oxides Sensor 3 Heater Control Circuit High Test Status	—	Okay / Malfunction / Not Run	The parameter displays Malfunction if the nitrogen oxides sensor 3 heater supply circuit is shorted high.
Nitrogen Oxides Sensor 3 Heater Control Circuit Low Test Status	—	Okay / Malfunction / Not Run	The parameter displays Malfunction if the nitrogen oxides sensor 3 heater supply circuit is shorted low.
Nitrogen Oxides Sensor 3 Heater Control Circuit Malfunction	—	Yes / No	This parameter displays the state of the Nitrogen Oxides (NOx) Sensor 3 Heater Control Circuit. The parameter displays Malfunction if the heater control circuit is open or shorted.
Nitrogen Oxides Sensor 3 Heater Control Circuit Open Test Status	—	Okay / Malfunction / Not Run	The parameter displays Malfunction if the nitrogen oxides sensor 3 heater supply circuit is shorted open.
Nitrogen Oxides Sensor 3 Heater Feedback Circuit High Test Status	—	Okay / Malfunction / Not Run	The parameter displays Malfunction if the nitrogen oxides sensor 3 temperature circuit is shorted high.
Nitrogen Oxides Sensor 3 Heater Feedback Circuit Low Test Status	—	Okay / Malfunction / Not Run	The parameter displays Malfunction if the nitrogen oxides sensor 3 temperature circuit is shorted low.
Nitrogen Oxides Sensor 3 Heater Feedback Circuit Malfunction	—	Yes / No	This parameter displays the state of the Nitrogen Oxides (NOx) Sensor 3 Heater Feedback Circuit. The parameter displays Malfunction if the heater feedback circuit is open or shorted.
Nitrogen Oxides Sensor 3 Heater Feedback Circuit Open Test Status	—	Okay / Malfunction / Not Run	The parameter displays Malfunction if the nitrogen oxides sensor 3 temperature circuit is open.
Nitrogen Oxides Sensor 3 Heater Ground Circuit High Test Status	—	Okay / Malfunction / Not Run	The parameter displays Malfunction if the nitrogen oxides sensor 3 heater feedback circuit is shorted high.
Nitrogen Oxides Sensor 3 Heater Ground Circuit Low Test Status	—	Okay / Malfunction / Not Run	The parameter displays Malfunction if the nitrogen oxides sensor 3 heater feedback circuit is shorted low.
Nitrogen Oxides Sensor 3 Heater Ground Circuit Malfunction	—	Yes / No	This parameter displays the state of the Nitrogen Oxides (NOx) Sensor 3 Heater Ground Circuit. The parameter displays Malfunction if the heater ground circuit is open or shorted.
Nitrogen Oxides Sensor 3 Heater Ground Circuit Open Test Status	—	Okay / Malfunction / Not Run	The parameter displays Malfunction if the nitrogen oxides sensor 3 heater feedback circuit is open.
Nitrogen Oxides Sensor 3 Heater Mode	—	Varies	This parameter displays the status of the nitrogen oxides sensor 3 heater.
Nitrogen Oxides Sensor 3 Heater Operation	—	Allowed / Not Allowed	This parameter displays the state of the nitrogen oxides sensor 3 heater operation. The parameter displays Allowed when commanded by the engine control module.
Nitrogen Oxides Sensor 3 Heater Resistance	—	Ω	This parameter displays the resistance value of the nitrogen oxides sensor 3 heater.

Parameter	System State	Expected Value	Description
Nitrogen Oxides Sensor 3 Heater Supply Voltage Circuit Malfunction	—	Yes / No	This parameter displays the state of the Nitrogen Oxides (NOx) Sensor 3 Heater Supply Voltage Circuit. The parameter displays Malfunction if the heater supply voltage circuit is open or shorted.
Nitrogen Oxides Sensor 3 Nitrogen Oxides Concentration	—	ppm	This parameter displays the concentration of nitrogen oxides in the exhaust gas detected by nitrogen oxides sensor 3.
Nitrogen Oxides Sensor 3 Oxygen Concentration	—	%	This parameter displays the concentration of oxygen in the exhaust gas detected by nitrogen oxides sensor 3.
Nitrogen Oxides Sensor 3 Signal Circuit High Test Status	—	Okay / Malfunction / Not Run	The parameter displays Malfunction if the nitrogen oxides sensor 3 signal circuit is shorted high.
Nitrogen Oxides Sensor 3 Signal Circuit Low Test Status	—	Okay / Malfunction / Not Run	The parameter displays Malfunction if the nitrogen oxides sensor 3 signal circuit is shorted low.
Nitrogen Oxides Sensor 3 Signal Circuit Malfunction	—	Yes / No	This parameter displays the state of the Nitrogen Oxides (NOx) Sensor 3 Signal Circuit. The parameter displays Malfunction if the signal circuit is open or shorted.
Nitrogen Oxides Sensor 3 Signal Circuit Open Test Status	—	Okay / Malfunction / Not Run	The parameter displays Malfunction if the nitrogen oxides sensor 3 signal circuit is open.
Number of Completed Particulate Filter Regenerations	—	Counts	This parameter displays the number of successful particulate filter regenerations.
Number of DTC(s)	—	Counts	This parameter displays the number of emission related DTCs stored in the ECM.
Odometer When Engine Overspeed Detected	Engine Idling	km/miles	This parameter displays the kilometers or miles of the Odometer When Engine Overspeed Detected.
Output Shaft Speed Sensor	Engine Idling	RPM	This parameter displays the transmission output speed.
Oxygen Low Reference Circuit (Nitrogen Oxides Sensor) Malfunction	—	Yes / No	This parameter displays the state of the Nitrogen Oxides (NOx) Sensor 1 Oxygen Low Reference Circuit. The parameter displays Malfunction if the low reference circuit is open or shorted.
Oxygen Low Reference Circuit (Nitrogen Oxides Sensor 2) Malfunction	—	Yes / No	This parameter displays the state of the Nitrogen Oxides (NOx) Sensor 2 Oxygen Low Reference Circuit. The parameter displays Malfunction if the low reference circuit is open or shorted.
Oxygen Low Reference Circuit (Nitrogen Oxides Sensor 3) Malfunction	—	Yes / No	This parameter displays the state of the Nitrogen Oxides (NOx) Sensor 3 Oxygen Low Reference Circuit. The parameter displays Malfunction if the low reference circuit is open or shorted.
Oxygen Low Reference Circuit (Nitrogen Oxides Sensor) Open Test Status	—	Okay / Malfunction / Not Run	The parameter displays Malfunction if the oxygen low reference circuit for NOx sensor 1 is open.

Parameter	System State	Expected Value	Description
Oxygen Low Reference Circuit (Nitrogen Oxides Sensor 2) Open Test Status	—	Okay / Malfunction / Not Run	The parameter displays Malfunction if the oxygen low reference circuit for NOx sensor 2 is open.
Oxygen Low Reference Circuit (Nitrogen Oxides Sensor 3) Open Test Status	—	Okay / Malfunction / Not Run	The parameter displays Malfunction if the oxygen low reference circuit for NOx sensor 3 is open.
Oxygen Low Reference Circuit High (Nitrogen Oxides Sensor) Test Status	—	Okay / Malfunction / Not Run	The parameter displays Malfunction if the oxygen low reference circuit for NOx sensor 1 is shorted high.
Oxygen Low Reference Circuit High (Nitrogen Oxides Sensor 2) Test Status	—	Okay / Malfunction / Not Run	The parameter displays Malfunction if the oxygen low reference circuit for NOx sensor 2 is shorted high.
Oxygen Low Reference Circuit High (Nitrogen Oxides Sensor 3) Test Status	—	Okay / Malfunction / Not Run	The parameter displays Malfunction if the oxygen low reference circuit for NOx sensor 3 is shorted high.
Oxygen Low Reference Circuit Low (Nitrogen Oxides Sensor) Test Status	—	Okay / Malfunction / Not Run	The parameter displays Malfunction if the oxygen low reference circuit for NOx sensor 1 is shorted low.
Oxygen Low Reference Circuit Low (Nitrogen Oxides Sensor 2) Test Status	—	Okay / Malfunction / Not Run	The parameter displays Malfunction if the oxygen low reference circuit for NOx sensor 2 is shorted low.
Oxygen Low Reference Circuit Low (Nitrogen Oxides Sensor 3) Test Status	—	Okay / Malfunction / Not Run	The parameter displays Malfunction if the oxygen low reference circuit for NOx sensor 3 is shorted low.
Oxygen Pump Current Control Circuit (Nitrogen Oxides Sensor) Malfunction	—	Yes / No	This parameter displays the state of the Nitrogen Oxides (NOx) Sensor 1 Oxygen Pump Current Control Circuit. The parameter displays Malfunction if the pump current control circuit is open or shorted.
Oxygen Pump Current Control Circuit (Nitrogen Oxides Sensor 2) Malfunction	—	Yes / No	This parameter displays the state of the Nitrogen Oxides (NOx) Sensor 2 Oxygen Pump Current Control Circuit. The parameter displays Malfunction if the pump current control circuit is open or shorted.
Oxygen Pump Current Control Circuit (Nitrogen Oxides Sensor 3) Malfunction	—	Yes / No	This parameter displays the state of the Nitrogen Oxides (NOx) Sensor 3 Oxygen Pump Current Control Circuit. The parameter displays Malfunction if the pump current control circuit is open or shorted.
Oxygen Pump Current Control Circuit (Nitrogen Oxides Sensor) Open Test Status	—	Okay / Malfunction / Not Run	The parameter displays Malfunction if the oxygen pump current control circuit for NOx sensor 1 is open.
Oxygen Pump Current Control Circuit (Nitrogen Oxides Sensor 2) Open Test Status	—	Okay / Malfunction / Not Run	The parameter displays Malfunction if the oxygen pump current control circuit for NOx sensor 2 is open.
Oxygen Pump Current Control Circuit (Nitrogen Oxides Sensor 3) Open Test Status	—	Okay / Malfunction / Not Run	The parameter displays Malfunction if the oxygen pump current control circuit for NOx sensor 3 is open.
Oxygen Pump Current Control Circuit High (Nitrogen Oxides Sensor) Test Status	—	Okay / Malfunction / Not Run	The parameter displays Malfunction if the oxygen pump current control circuit for NOx sensor 1 is shorted high.
Oxygen Pump Current Control Circuit High (Nitrogen Oxides Sensor 2) Test Status	—	Okay / Malfunction / Not Run	The parameter displays Malfunction if the oxygen pump current control circuit for NOx sensor 2 is shorted high.

Parameter	System State	Expected Value	Description
Oxygen Pump Current Control Circuit High (Nitrogen Oxides Sensor 3) Test Status	—	Okay / Malfunction / Not Run	The parameter displays Malfunction if the oxygen pump current control circuit for NOx sensor 3 is shorted high.
Oxygen Pump Current Control Circuit Low (Nitrogen Oxides Sensor) Test Status	—	Okay / Malfunction / Not Run	The parameter displays Malfunction if the oxygen pump current control circuit for NOx sensor 1 is shorted low.
Oxygen Pump Current Control Circuit Low (Nitrogen Oxides Sensor 2) Test Status	—	Okay / Malfunction / Not Run	The parameter displays Malfunction if the oxygen pump current control circuit for NOx sensor 2 is shorted low.
Oxygen Pump Current Control Circuit Low (Nitrogen Oxides Sensor 3) Test Status	—	Okay / Malfunction / Not Run	The parameter displays Malfunction if the oxygen pump current control circuit for NOx sensor 3 is shorted low.
Oxygen Reference Circuit (Nitrogen Oxides Sensor) Open Test Status	—	Okay / Malfunction / Not Run	The parameter displays Malfunction if the oxygen reference circuit for NOx sensor 1 is open.
Oxygen Reference Circuit (Nitrogen Oxides Sensor 2) Open Test Status	—	Okay / Malfunction / Not Run	The parameter displays Malfunction if the oxygen reference circuit for NOx sensor 2 is open.
Oxygen Reference Circuit (Nitrogen Oxides Sensor 3) Open Test Status	—	Okay / Malfunction / Not Run	The parameter displays Malfunction if the oxygen reference circuit for NOx sensor 3 is open.
Oxygen Reference Circuit High (Nitrogen Oxides Sensor) Test Status	—	Okay / Malfunction / Not Run	The parameter displays Malfunction if the oxygen reference circuit for NOx sensor 1 is shorted high.
Oxygen Reference Circuit High (Nitrogen Oxides Sensor 2) Test Status	—	Okay / Malfunction / Not Run	The parameter displays Malfunction if the oxygen reference circuit for NOx sensor 2 is shorted high.
Oxygen Reference Circuit High (Nitrogen Oxides Sensor 3) Test Status	—	Okay / Malfunction / Not Run	The parameter displays Malfunction if the oxygen reference circuit for NOx sensor 3 is shorted high.
Oxygen Reference Circuit Low (Nitrogen Oxides Sensor) Test Status	—	Okay / Malfunction / Not Run	The parameter displays Malfunction if the oxygen reference circuit for NOx sensor 1 is shorted low.
Oxygen Reference Circuit Low (Nitrogen Oxides Sensor 2) Test Status	—	Okay / Malfunction / Not Run	The parameter displays Malfunction if the oxygen reference circuit for NOx sensor 2 is shorted low.
Oxygen Reference Circuit Low (Nitrogen Oxides Sensor 3) Test Status	—	Okay / Malfunction / Not Run	The parameter displays Malfunction if the oxygen reference circuit for NOx sensor 3 is shorted low.
Oxygen Reference Voltage Circuit (Nitrogen Oxides Sensor) Malfunction	—	Yes / No	This parameter displays the state of the Nitrogen Oxides (NOx) Sensor 1 Oxygen Reference Voltage Circuit. The parameter displays Malfunction if the reference voltage circuit is open or shorted.
Oxygen Reference Voltage Circuit (Nitrogen Oxides Sensor 2) Malfunction	—	Yes / No	This parameter displays the state of the Nitrogen Oxides (NOx) Sensor 2 Oxygen Reference Voltage Circuit. The parameter displays Malfunction if the reference voltage circuit is open or shorted.
Oxygen Reference Voltage Circuit (Nitrogen Oxides Sensor 3) Malfunction	—	Yes / No	This parameter displays the state of the Nitrogen Oxides (NOx) Sensor 3 Oxygen Reference Voltage Circuit. The parameter displays Malfunction if the reference voltage circuit is open or shorted.

Parameter	System State	Expected Value	Description
Oxygen Sensor Signal Circuit (Nitrogen Oxides Sensor) Malfunction	—	Yes / No	This parameter displays the state of the Nitrogen Oxides (NOx) Sensor 1 Oxygen Sensor Signal Circuit. The parameter displays Malfunction if the sensor signal circuit is open or shorted.
Oxygen Sensor Signal Circuit (Nitrogen Oxides Sensor 2) Malfunction	—	Yes / No	This parameter displays the state of the Nitrogen Oxides (NOx) Sensor 2 Oxygen Sensor Signal Circuit. The parameter displays Malfunction if the sensor signal circuit is open or shorted.
Oxygen Signal Circuit (Nitrogen Oxides Sensor 3) Malfunction	—	Yes / No	This parameter displays the state of the Nitrogen Oxides (NOx) Sensor 3 Oxygen Signal (Lambda Linear Signal) Circuit. The parameter displays Malfunction if the signal circuit is open or shorted.
Oxygen Signal Circuit (Nitrogen Oxides Sensor) Open Test Status	—	Okay / Malfunction / Not Run	The parameter displays Malfunction if the Oxygen Signal (Lambda Linear Signal) circuit for NOx sensor 2 is open.
Oxygen Signal Circuit (Nitrogen Oxides Sensor 2) Open Test Status	—	Okay / Malfunction / Not Run	The parameter displays Malfunction if the Oxygen Signal (Lambda Linear Signal) circuit for NOx sensor 2 is open.
Oxygen Signal Circuit (Nitrogen Oxides Sensor 3) Open Test Status	—	Okay / Malfunction / Not Run	The parameter displays Malfunction if the Oxygen Signal (Lambda Linear Signal) circuit for NOx sensor 3 is open.
Oxygen Signal Circuit High (Nitrogen Oxides Sensor) Test Status	—	Okay / Malfunction / Not Run	The parameter displays Malfunction if the Oxygen Signal (Lambda Linear Signal) circuit for NOx sensor 1 is shorted high.
Oxygen Signal Circuit High (Nitrogen Oxides Sensor 2) Test Status	—	Okay / Malfunction / Not Run	The parameter displays Malfunction if the Oxygen Signal (Lambda Linear Signal) circuit for NOx sensor 2 is shorted high.
Oxygen Signal Circuit High (Nitrogen Oxides Sensor 3) Test Status	—	Okay / Malfunction / Not Run	The parameter displays Malfunction if the Oxygen Signal (Lambda Linear Signal) circuit for NOx sensor 3 is shorted high.
Oxygen Signal Circuit Low (Nitrogen Oxides Sensor) Test Status	—	Okay / Malfunction / Not Run	The parameter displays Malfunction if the Oxygen Signal (Lambda Linear Signal) circuit for NOx sensor 1 is shorted low.
Oxygen Signal Circuit Low (Nitrogen Oxides Sensor 2) Test Status	—	Okay / Malfunction / Not Run	The parameter displays Malfunction if the Oxygen Signal (Lambda Linear Signal) circuit for NOx sensor 2 is shorted low.
Oxygen Signal Circuit Low (Nitrogen Oxides Sensor 3) Test Status	—	Okay / Malfunction / Not Run	The parameter displays Malfunction if the Oxygen Signal (Lambda Linear Signal) circuit for NOx sensor 3 is shorted low.
PTO	—	Active / Inactive	This parameter contains an indication that power take off (PTO) is active
PTO Engine Shutdown Signal	—	Yes / No	This parameter contains several signals associated with the status of the power take off (PTO) and fast idle systems.

Parameter	System State	Expected Value	Description
Park/Neutral Position Switch	—	Park/Neutral/In Gear	This parameter indicates the range selection of the automatic transmission as calculated by the control module based on input from the park/neutral position (PNP) switch. The scan tool will display, In Gear, Park, or Neutral depending on the PNP switch position.
Particulate Filter Monitor - Since Diagnostic Trouble Codes Cleared	—	Not Supported / Complete / Incomplete	This parameter displays the status of the Particulate Filter monitor, the parameter displays Complete when the monitor has completed since DTCs Cleared.
Particulate Filter Monitor - This Ignition Cycle	—	Disabled / Enabled / Complete	This parameter displays Complete if completion status during the current driving / monitoring cycle of the Particulate Filter Monitor is complete.
Particulate Filter Pressure	—	kPa (PSI)	This parameter contains the diesel particulate filter pressure calculated as the difference between ambient air pressure (barometric pressure) and the exhaust gas pressure
Particulate Filter Pressure Sensor	—	Volts	This parameter will display the voltage differential between the front and rear pressures at the DPF as calculated by the ECM. This will be displayed in volts. As the DPF becomes restricted the differential pressure increases and the voltage will get higher.
Particulate Filter Pressure Sensor Circuit High Malfunction	—	Yes / No	This parameter will display Yes if the particulate filter pressure sensor circuit is malfunctioning.
Particulate Filter Regeneration Inhibit - Battery Voltage Low	—	Yes / No	This parameter displays Yes when regeneration is inhibited due to battery in under voltage conditions.
Particulate Filter Regeneration Inhibit - Catalytic Converter Inlet Temperature Too High	—	Yes / No	This parameter displays Yes when regeneration is inhibited due to diesel oxidation catalyst inlet temperature too high.
Particulate Filter Regeneration Inhibit - Catalytic Converter Outlet Temperature Too High	—	Yes / No	This parameter displays Yes when regeneration is inhibited due to diesel oxidation catalyst outlet temperature too high.
Particulate Filter Regeneration Inhibit - Deceleration Fuel Cut-Off	—	Yes / No	This parameter displays Yes when regeneration is inhibited due to extended engine cutoff.
Particulate Filter Regeneration Inhibit - Engine Coolant Temperature Too High	—	Yes / No	This parameter displays Yes when regeneration is inhibited due to engine coolant temperature too high.
Particulate Filter Regeneration Inhibit - Engine Off	—	Yes / No	This parameter displays Yes when regeneration is inhibited due to engine stopped.
Particulate Filter Regeneration Inhibit - Excessive Idle Time	—	Yes / No	This parameter displays Yes when regeneration is inhibited due to extended engine low-idle.
Particulate Filter Regeneration Inhibit - Fuel Temperature Too High	—	Yes / No	This parameter displays Yes when regeneration is inhibited due to fuel temperature too high.

Parameter	System State	Expected Value	Description
Particulate Filter Regeneration Inhibit - Insufficient Time Since Last Regeneration Attempt	—	Yes / No	This parameter displays Yes when regeneration is inhibited due to regeneration time lock.
Particulate Filter Regeneration Inhibit - Low Fuel Level	—	Yes / No	This parameter displays Yes when regeneration is inhibited due to too low fuel tank level.
Particulate Filter Regeneration Inhibit - Maximum Post-Fuel Injection Time Exceeded	—	Yes / No	This parameter displays Yes when regeneration is inhibited due to post-injection maximum enabling time expired.
Particulate Filter Regeneration Inhibit - Maximum Steady State Time Exceeded	—	Yes / No	This parameter displays Yes when regeneration is inhibited due to diesel particulate filter regeneration steady-state maximum entering time expired.
Particulate Filter Regeneration Inhibit - Maximum Time Exceeded	—	Yes / No	This parameter displays Yes when regeneration is inhibited due to diesel particulate regeneration duration too long.
Particulate Filter Regeneration Inhibit - Nitrogen Oxides Catalytic Converter Outlet Temperature Too High	—	Yes / No	This parameter displays Yes when regeneration is inhibited due to Selective Catalytic Reduction (SCR) outlet temperature too high.
Particulate Filter Regeneration Inhibit - Particulate Filter Inlet Temperature Too High	—	Yes / No	This parameter displays Yes when regeneration is inhibited due to diesel particulate filter inlet temperature too high.
Particulate Filter Regeneration Inhibit - Particulate Filter Outlet Temperature Too High	—	Yes / No	This parameter displays Yes when regeneration is inhibited due to diesel particulate filter outlet temperature too high.
Particulate Filter Regeneration Inhibit - Particulate Matter Sensor Regeneration Active	—	Yes / No	This parameter displays Yes when regeneration is inhibited due to particulate matter sensor regeneration.
Particulate Filter Regeneration Inhibit - Power Takeoff is Enabled	—	Yes / No	This parameter displays Yes when regeneration is inhibited due to deactivated by Power Takeoff (PTO).
Particulate Filter Regeneration Inhibit - Reductant Injector Cooling Disabled	—	Yes / No	This parameter displays Yes when regeneration is inhibited due to reductant injector (DEFMV) cooling not possible.
Particulate Filter Regeneration Inhibit - Regeneration Already Completed	—	Yes / No	This parameter displays Yes when regeneration is inhibited due to diesel particulate filter regeneration completed.
Particulate Filter Regeneration Inhibit - System Malfunction	—	Yes / No	This parameter displays Yes when regeneration is inhibited for a system fault or a DTC present.
Particulate Filter Regeneration Inhibit - Turbocharger Inlet Temperature Too High	—	Yes / No	This parameter displays Yes when regeneration is inhibited due to turbo charger inlet temperature too high.
Particulate Filter Regeneration Inhibit - Vehicle Speed or Engine Load Too Low	—	Yes / No	This parameter displays Yes when regeneration is inhibited due to vehicle speed below a threshold or the engine load below a minimum.
Particulate Filter Regeneration Reason	—	Varies	This parameter displays the regeneration demand and completion status.

Parameter	System State	Expected Value	Description
Particulate Filter Regeneration Status	—	Not Required / Active—Varied Stages / Inhibited	This parameter displays the status of the Diesel Particulate regeneration activity.
Particulate Filter Service Regeneration Status	—	Not Requested / Active / Completed / Failed	This parameter displays the status of the Diesel Particulate Service Regeneration procedure.
Particulate Filter Soot Accumulation Calculated From Other Engine Data	—	%	This parameter displays the estimated percentage of soot in the Diesel Particle Filter using the available engine data.
Particulate Filter Soot Accumulation Calculated From Particulate Filter Pressure Sensor	—	%	This parameter displays the estimated percentage of soot in the Diesel Particle Filter using the particulate filter pressure sensor.
Particulate Matter Sensor	—	Mg/m3	This parameter displays the mass concentration of exhaust particulate matter measured by the particulate matter sensor.
Particulate Matter Sensor	—	uA	This parameter displays the measured current from the sensing element of the particulate matter sensor.
Particulate Matter Sensor Control Unit Communication Status	—	Ready	This parameter displays the communication status of the particulate matter sensor control unit.
Particulate Matter Sensor Identifier	—	#	This parameter displays the value sent from the sensor control unit to engine control module to provide sensor build information in order for the software to compensate for sensor variations.
Particulate Matter Sensor Measurement	—	Active	This parameter displays the status of the particular matter sensor.
Particulate Matter Sensor Operation	—	Allowed	This parameter displays if the exhaust temperature dew point is reached to allow the particulate matter sensor to operate.
Particulate Matter Sensor Regeneration	—	Inactive	This parameter displays Active when the particulate matter sensor is regenerating.
Particulate Matter Sensor Soot Accumulation	—	%	This parameter displays Particulate Matter (PM) Sensor normalized output in percent.
Particulate Matter Sensor Status	—	Ready	This parameter displays the status of the particulate matter sensor.
Particulate Matter Sensor Temperature	—	°C (°F)	This parameter displays the current temperature of the particulate matter sensor in Celsius and Fahrenheit.
Pilot Injection	—	Inactive	Pilot Injection Active indicates that pilot injections are active.
Positive Crankcase Ventilation Heater Command	—	On/Off	This parameter displays the current command of the positive crankcase ventilation heater.
Positive Crankcase Ventilation Heater Control Circuit High Voltage Test Status	—	OK	This parameter displays the state of the positive crankcase heater control circuit. The parameter displays Malfunction if the positive crankcase heater control circuit is shorted to voltage.

Parameter	System State	Expected Value	Description
Positive Crankcase Ventilation Heater Control Circuit Low Voltage Test Status	—	OK	This parameter displays the state of the positive crankcase heater control circuit. The parameter displays Malfunction if the positive crankcase heater control circuit is shorted to ground.
Positive Crankcase Ventilation Heater Control Circuit Open Test Status	—	OK	This parameter displays the state of the positive crankcase heater control circuit. The parameter displays Malfunction if the positive crankcase heater control circuit is open.
Post Injection	—	Inactive	Post Injection Active indicates that post injections is active
Power Mode	—	Off	This parameter displays the state of the System Power Mode. This signal is based upon the state of the system power mode received over serial communication from the vehicle electronics.
Radiator Coolant Temperature Sensor	—	°C (°F)	This parameter displays the radiator coolant temperature measured by a sensor located in the coolant outlet of the radiator.
Reduced Engine Power	—	Inactive	This parameter will display the fuel system status as commanded by the ECM.
Reduced Engine Power History	—	Varies	This parameter displays the last reason that the engine control module has illuminated the Reduced Engine Power (REP) indication.
Reductant Absolute Pressure	—	kPa	This parameter displays the absolute pressure of the reductant.
Reductant Control Module Sensor Communication Ground Circuit High Malfunction	—	Yes / No	The parameter displays Yes if the Nitrogen Oxides (NOx) reductant control module sensor/switch communication ground circuit A is faulted high.
Reductant Control Module Sensor Reference Circuit High Malfunction	—	Yes / No	The parameter displays Yes if the Nitrogen Oxides (NOx) reductant control module sensor/switch communication 5V supply circuit A is faulted high.
Reductant Control Module Sensor Reference Circuit Low Malfunction	—	Yes / No	The parameter displays Yes if the Nitrogen Oxides (NOx) reductant control module sensor/switch communication 5V supply circuit A is faulted low.
Reductant Control Module Sensor Serial Communication Circuit High Malfunction	—	Yes / No	The parameter displays Yes if the Nitrogen Oxides (NOx) reductant control module sensor/switch communication circuit A is faulted high.
Reductant Control Module Sensor Serial Communication Circuit Low Malfunction	—	Yes / No	The parameter displays Yes if the Nitrogen Oxides (NOx) reductant control module sensor/switch communication circuit A is faulted low.

Parameter	System State	Expected Value	Description
Reductant Control Module Sensor Serial Communication Circuit Performance Malfunction	—	Yes / No	The parameter displays Yes if the Nitrogen Oxides (NOx) reductant control module sensor/switch communication circuit A faulty performance.
Reductant Consumption During Drive Cycle	—	L (gal)	This parameter displays the amount of reductant (DEF) used during the current drive cycle.
Reductant Fluid Quality Gross Error Test	—	Complete / Incomplete	This parameter displays the test completion state of the Selective Catalyst Reduction (SCR) gross error quality check procedure.
Reductant Fluid Quality Gross Error Test Diagnostic	—	Active / Inactive	This parameter displays the monitoring status of the Selective Catalyst Reduction (SCR) gross error quality check procedure.
Reductant Fluid Quality Gross Error Test Diagnostics	—	Varies	This parameter displays the phases of the Selective Catalyst Reduction (SCR) gross error quality check procedure.
Reductant Fluid Quality Gross Error Test Performed This Ignition Cycle	—	Yes / No	This parameter displays the test completion state of the Selective Catalyst Reduction (SCR) gross error quality check procedure during the most recent ignition cycle.
Reductant Fluid Quality Gross Error Test Requested Warning	—	Yes / No	This parameter displays the warning requested as a result of the of the Selective Catalyst Reduction (SCR) gross error quality check procedure.
Reductant Fluid Quality Small Error Test	—	Complete / Incomplete	This parameter displays the test completion state of the Selective Catalyst Reduction (SCR) small error quality check procedure.
Reductant Fluid Quality Small Error Test Diagnostic	—	Active / Inactive	This parameter displays the monitoring status of the Selective Catalyst Reduction (SCR) small error quality check procedure.
Reductant Fluid Quality Small Error Test Performed This Ignition Cycle	—	Yes / No	This parameter displays the test completion state of the Selective Catalyst Reduction (SCR) small error quality check procedure during the most recent ignition cycle.
Reductant Fluid Quality Test	—	Completed with success	This parameter displays the phases of the SCR (Selective Catalyst Reduction) service quality check procedure.
Reductant Fluid Quality Test Diagnostic	—	Varies	This parameter displays the phases of the Selective Catalyst Reduction (SCR) service quality check procedure.
Reductant Fluid Quality Warning Indicator Command	—	None	This parameter displays the control module Nitrogen Oxides (NOx) reductant quality warning indicator command.
Reductant Heater Command	—	On / Off	This parameter displays the commanded state of the Nitrogen Oxides (NOx) reductant heater 1 output (the output is considered to be commanded On if the duty cycle is not zero)

Parameter	System State	Expected Value	Description
Reductant Heater Control Circuit High Malfunction	—	Yes / No	The parameter displays Yes if the Nitrogen Oxides (NOx) reductant tank heater circuit is shorted to voltage.
Reductant Heater Control Circuit High Test Status	—	OK, Malfunction, Not Run	The parameter displays Malfunction if the low-side control circuit for Nitrogen Oxides (NOx) reductant tank heater 1 is shorted to voltage.
Reductant Heater Control Circuit Low Malfunction	—	Yes / No	The parameter displays Yes if the Nitrogen Oxides (NOx) reductant tank heater circuit is shorted to ground.
Reductant Heater Control Circuit Low Test Status	—	OK, Malfunction, Not Run	The parameter displays Malfunction if the low-side control circuit for Nitrogen Oxides (NOx) reductant heater 1 is shorted to ground.
Reductant Heater Control Circuit Malfunction	—	Yes / No	The parameter displays Yes if the Nitrogen Oxides (NOx) reductant tank heater circuit is open.
Reductant Heater Control Circuit Open Test Status	—	OK, Malfunction, Not Run	The parameter displays Malfunction if the low-side control circuit for Nitrogen Oxides (NOx) reductant heater 1 is open.
Reductant Heater Current	—	Amps	This parameter displays the Nitrogen Oxides (NOx) reductant heater 1 current.
Reductant Heater Driver Temperature Too High Malfunction	—	Yes / No	The parameter displays Yes if the Nitrogen Oxides (NOx) reductant tank heater driver temperature is too high.
Reductant Heater Feedback Circuit Low Malfunction	—	Yes / No	The parameter displays Yes if the Nitrogen Oxides (NOx) reductant tank heater supply undervoltage fault check fails.
Reductant Heater High Control Circuit High Test Status	—	OK, Malfunction, Not Run	The parameter displays Malfunction if the high-side circuit for Nitrogen Oxides (NOx) reductant heater 1 is shorted to voltage.
Reductant Heater High Control Circuit Low Test Status	—	OK, Malfunction, Not Run	The parameter displays Malfunction if the high-side circuit for Nitrogen Oxides (NOx) reductant heater 1 is shorted to ground.
Reductant Heater Performance Malfunction	—	Yes / No	The parameter displays Yes if reductant tank heater fails a plausibility check.
Reductant Heater 2 Command	—	On / Off	This parameter displays the commanded state of the Nitrogen Oxides (NOx) reductant heater 2 output (the output is considered to be commanded On if the duty cycle is not zero)
Reductant Heater 2 Control Circuit High Malfunction	—	Yes / No	The parameter displays Yes if the Nitrogen Oxides (NOx) reductant line heater circuit is shorted to voltage.
Reductant Heater 2 Control Circuit High Test Status	—	OK, Malfunction, Not Run	The parameter displays Malfunction if the low-side control circuit for Nitrogen Oxides (NOx) reductant heater 2 is shorted to voltage.

Parameter	System State	Expected Value	Description
Reductant Heater 2 Control Circuit Low Malfunction	—	Yes / No	The parameter displays Yes if the Nitrogen Oxides (NOx) reductant line heater circuit is shorted to ground.
Reductant Heater 2 Control Circuit Low Test Status	—	OK, Malfunction, Not Run	The parameter displays Malfunction if the low-side control circuit for Nitrogen Oxides (NOx) reductant heater 2 is shorted to ground.
Reductant Heater 2 Control Circuit Malfunction	—	Yes / No	The parameter displays Yes if the Nitrogen Oxides (NOx) reductant line heater circuit is open.
Reductant Heater 2 Control Circuit Open Test Status	—	OK, Malfunction, Not Run	The parameter displays Malfunction if the low-side control circuit for Nitrogen Oxides (NOx) reductant heater 2 is open.
Reductant Heater 2 Current	—	Amps	This parameter displays the Nitrogen Oxides (NOx) reductant heater 2 current.
Reductant Heater 2 Driver Temperature Too High Malfunction	—	Yes / No	The parameter displays Yes if the Nitrogen Oxides (NOx) reductant line heater driver temperature is too high.
Reductant Heater 2 Feedback Circuit Low Malfunction	—	Yes / No	The parameter displays Yes if the Nitrogen Oxides (NOx) reductant line heater supply undervoltage fault check fails.
Reductant Heater 2 High Control Circuit High Test Status	—	OK, Malfunction, Not Run	The parameter displays Malfunction if the high-side control circuit for Nitrogen Oxides (NOx) reductant heater 2 is shorted to voltage.
Reductant Heater 2 High Control Circuit Low Test Status	—	OK, Malfunction, Not Run	The parameter displays Malfunction if the high-side control circuit for Nitrogen Oxides (NOx) reductant heater 2 is shorted to ground.
Reductant Heater 2 Performance Malfunction	—	Yes / No	The parameter displays Yes if reductant line heater fails a plausibility check.
Reductant Heater Request	—	On / Off	This parameter displays the commanded state of the Reductant Heater 1. The Reductant Heater 1 should be On when the scan tool indicates the Reductant Heater 1 Command is ON.
Reductant Heater 2 Request	—	On / Off	This parameter displays the commanded state of the Reductant Heater 2. The Reductant Heater 2 should be On when the scan tool indicates the Reductant Heater 2 Command is ON.
Reductant Heater 3 Request	—	On / Off	This parameter displays the commanded state of the Reductant Heater 3. The Reductant Heater 3 should be On when the scan tool indicates the Reductant Heater 3 Command is ON.
Reductant Heater Supply Voltage	—	Okay / Out of Range	This parameter displays Out of Range if reductant tank/pipe heaters voltage is out of range.
Reductant High Pressure Malfunction	—	Yes / No	The parameter displays Yes if the Nitrogen Oxides (NOx) reductant pressure control governor deviation is high.

Parameter	System State	Expected Value	Description
Reductant Low Pressure Malfunction	—	Yes / No	The parameter displays Yes if the Nitrogen Oxides (NOx) reductant pressure control governor deviation is low.
Reductant Injection Control Extreme Pressure Test	—	Passed	This parameter displays the test status of the NOx reductant dosing system extreme pressure test.
Reductant Injection Control Low Pressure Test	—	Passed	This parameter displays the test status of the NOx reductant dosing system low pressure test.
Reductant Injection Control Overpressure Test Status	—	Passed	This parameter displays the test status of the NOx reductant closing system overpressure test.
Reductant Injection Control Pressure Build-Up Test Status	—	Passed	This parameter displays the test status of the NOx reductant dosing system test.
Reductant Injection Inhibit Reason	—	Varies	This parameter displays the reason why the Nitrogen Oxides (NOx) Reductant system has been inhibited from operation.
Reductant Injection Inhibit Requested	—	Yes / No	This parameter displays Yes if the Nitrogen Oxides (NOx) Reductant system has been inhibited from operation.
Reductant Injection Quantity Test Abort Reason	—	Varies	This parameter displays the reductant injector quantity flow test abort reason.
Reductant Injection Quantity Test Status	—	Varies	This parameter displays the reductant injector quantity flow test status.
Reductant Injector Command	—	%	This parameter displays the commanded duty cycle for the NOx reductant dosing valve output.
Reductant Injector Control Circuit High Malfunction	—	Yes / No	The parameter displays Yes if the Nitrogen Oxides (NOx) reductant injector low-side control circuit is shorted to voltage.
Reductant Injector Control Circuit High Test Status	—	Okay, Malfunction, Not Run	This parameter displays the state of the reductant injector 1 control circuit. The parameter displays Malfunction if the low-side control circuit is shorted to voltage.
Reductant Injector Control Circuit Low Malfunction	—	Yes / No	The parameter displays Yes if the Nitrogen Oxides (NOx) reductant injector low-side control circuit is shorted to ground.
Reductant Injector Control Circuit Low Test Status	—	Okay, Malfunction, Not Run	This parameter displays the state of the reductant injector 1 control circuit. The parameter displays Malfunction if the low-side control circuit is shorted to ground.
Reductant Injector Control Circuit Malfunction	—	Yes / No	The parameter displays Yes if the Nitrogen Oxides (NOx) reductant injector control circuit is open.
Reductant Injector Control Circuit Open Test Status	—	Okay, Malfunction, Not Run	This parameter displays the state of the reductant injector 2 control circuit. The parameter displays Malfunction if the low-side control circuit is open.

Parameter	System State	Expected Value	Description
Reductant Injector Control Circuit Status	—	No Malfunction Present	This parameter displays the status of the Reductant Injection Control Circuit output.
Reductant Injector High Control Circuit High Malfunction	—	Yes / No	The parameter displays Yes if the Nitrogen Oxides (NOx) reductant injector high-side control circuit is shorted to voltage.
Reductant Injector High Control Circuit High Test Status	—	Okay, Malfunction, Not Run	This parameter displays the state of the reductant injector 1 high-side control circuit. The parameter displays Malfunction if the high-side control circuit is shorted to voltage.
Reductant Injector High Control Circuit Low Malfunction	—	Yes / No	The parameter displays Yes if the Nitrogen Oxides (NOx) reductant injector high-side control circuit is shorted to ground.
Reductant Injector High Control Circuit Low Test Status	—	Okay, Malfunction, Not Run	This parameter displays the state of the reductant injector 1 high-side control circuit. The parameter displays Malfunction if the high-side control circuit is shorted to ground.
Reductant Injector Performance Malfunction	—	Yes / No	The parameter displays Yes if a Nitrogen Oxides (NOx) reductant injector circuit is out of range.
Reductant Injector 2 Control Circuit High Test Status	—	Okay, Malfunction, Not Run	This parameter displays the state of the reductant injector 2 control circuit. The parameter displays Malfunction if the low-side control circuit is shorted to voltage.
Reductant Injector 2 Control Circuit Low Test Status	—	Okay, Malfunction, Not Run	This parameter displays the state of the reductant injector 2 control circuit. The parameter displays Malfunction if the low-side control circuit is shorted to ground.
Reductant Injector 2 Control Circuit Open Test Status	—	Okay, Malfunction, Not Run	This parameter displays the state of the reductant injector 2 control circuit. The parameter displays Malfunction if the low-side control circuit is open.
Reductant Injector 2 High Control Circuit High Test Status	—	Okay, Malfunction, Not Run	This parameter displays the state of the reductant injector 2 high-side control circuit. The parameter displays Malfunction if the high-side control circuit is shorted to voltage.
Reductant Injector 2 High Control Circuit Low Test Status	—	Okay, Malfunction, Not Run	This parameter displays the state of the reductant injector 2 high-side control circuit. The parameter displays Malfunction if the high-side control circuit is shorted to ground.
Reductant Injector 2 Quantity Test Abort Reason	—	Varies	This parameter displays the reductant injector 2 quantity flow test abort reason.
Reductant Injector 2 Quantity Test Status	—	Varies	This parameter displays the reductant injector 2 quantity flow test status.
Reductant Level	—	%	This parameter displays the total Reductant level as a percentage of the rated capacity of the tank.

Parameter	System State	Expected Value	Description
Reductant Level Sensor 1	—	Inactive	This parameter displays the individual Reductant Level Switch states. Active indicates that the level switch is detecting fluid in regards to its position in the reductant reservoir.
Reductant Level Sensor Circuit Low Malfunction	—	Yes / No	The parameter displays Yes if the Nitrogen Oxides (NOx) reductant level sensor circuit voltage is low.
Reductant Level Sensor 1 Circuit Status	—	No Malfunction	This parameter displays the circuit status of each reductant level sensor.
Reductant Level Sensor 2	—	Inactive	This parameter displays the individual Reductant Level Switch states. Active indicates that the level switch is detecting fluid in regards to its position in the reductant reservoir.
Reductant Level Sensor 2 Circuit Status	—	No Malfunction	This parameter displays the circuit status of each reductant level sensor.
Reductant Level Sensor 3	—	Inactive	This parameter displays the individual Reductant Level Switch states. Active indicates that the level switch is detecting fluid in regards to its position in the reductant reservoir.
Reductant Level Sensor 3 Circuit Status	—	No Malfunction	This parameter displays the circuit status of each reductant level sensor.
Reductant Level Warning Indicator Command	—	None	This parameter displays the engine control module (ECM) requested reductant fluid level warning indicator state.
Reductant Pressure	—	kPa (PSI)	This parameter displays the engine Reductant pressure from the sensor.
Reductant Pressure Sensor	—	Volts	This parameter contains the reductant pressure analog input as a percentage of its reference voltage.
Reductant Pressure Sensor Circuit High Malfunction	—	Yes / No	The parameter displays Yes if the Nitrogen Oxides (NOx) reductant tank pressure sensor signal circuit is shorted high.
Reductant Pressure Sensor Circuit Low Malfunction	—	Yes / No	The parameter displays Yes if the Nitrogen Oxides (NOx) reductant tank pressure sensor signal circuit is shorted low.
Reductant Pressure Sensor Performance Malfunction	—	Yes / No	The parameter displays Yes if Nitrogen Oxides (NOx) reductant pressure sensor fails a plausibility check.
Reductant Pump Command	—	%	This parameter displays the commanded duty cycle for the Nitrogen Oxides (NOx) reductant pump.
Reductant Pump Control Circuit High Malfunction	—	Yes / No	The parameter displays Yes if the Nitrogen Oxides (NOx) reductant pump control circuit is shorted to voltage.

Parameter	System State	Expected Value	Description
Reductant Pump Control Circuit High Test Status	—	Okay, Malfunction, Not Run	The parameter displays Malfunction if a Nitrogen Oxides (NOx) reductant pump motor phase control circuit is shorted high.
Reductant Pump Control Circuit Low Malfunction	—	Yes / No	The parameter displays Yes if the Nitrogen Oxides (NOx) reductant pump control circuit is shorted to ground.
Reductant Pump Control Circuit Low Test Status	—	Okay, Malfunction, Not Run	The parameter displays Malfunction if a Nitrogen Oxides (NOx) reductant pump motor phase control circuit is shorted to ground.
Reductant Pump Control Circuit Malfunction	—	Yes / No	The parameter displays Yes if the Nitrogen Oxides (NOx) reductant pump control circuit is open.
Reductant Pump Control Circuit Open Test Status	—	Okay, Malfunction, Not Run	The parameter displays Malfunction if a Nitrogen Oxides (NOx) reductant pump motor phase control circuit is open.
Reductant Pump Control Circuit Overcurrent Test Status	—	Okay, Malfunction, Not Run	The parameter displays Malfunction if a Nitrogen Oxides (NOx) reductant pump current is too high.
Reductant Pump Control Circuit Shorted Malfunction	—	Yes / No	The parameter displays Yes if the Nitrogen Oxides (NOx) reductant pump motor circuits are shorted.
Reductant Pump Control Circuit Shorted Test Status	—	Okay, Malfunction, Not Run	The parameter displays Malfunction if the Nitrogen Oxides (NOx) reductant pump motor phase control circuits are shorted.
Reductant Pump Current Too High Malfunction	—	Yes / No	The parameter displays Malfunction if the Nitrogen Oxides (NOx) reductant pump motor current is too high.
Reductant Pump Driver Temperature Too High Malfunction	—	Yes / No	The parameter displays Yes if the Nitrogen Oxides (NOx) reductant pump motor temperature is too high.
Reductant Pump Heater Command	—	On / Off	This parameter displays the commanded state of the Nitrogen Oxides (NOx) reductant pump heater.
Reductant Pump Driver Temperature Too High Malfunction	—	Yes / No	The parameter displays Yes if the Nitrogen Oxides (NOx) reductant pump motor temperature is too high.
Reductant Pump Low Speed Malfunction	—	Yes / No	The parameter displays Malfunction if a Nitrogen Oxides (NOx) reductant pump motor speed is low or rotor is stalled.
Reductant Pump Output Circuit High Malfunction	—	Yes / No	The parameter displays Yes if the Nitrogen Oxides (NOx) reductant pump output circuit is shorted to voltage.
Reductant Pump Output Circuit Low Malfunction	—	Yes / No	The parameter displays Yes if the Nitrogen Oxides (NOx) reductant pump output circuit is shorted to ground.
Reductant Pump Output Circuit Low Test Status	—	Okay, Malfunction, Not Run	The parameter displays Malfunction if a Nitrogen Oxides (NOx) reductant pump motor output circuit is shorted to ground.

Parameter	System State	Expected Value	Description
Reductant Pump Output Circuit Malfunction	—	Yes / No	The parameter displays Yes if the Nitrogen Oxides (NOx) reductant pump output circuit is open.
Reductant Pump Output Circuit Open Test Status	—	Okay, Malfunction, Not Run	The parameter displays Malfunction if a Nitrogen Oxides (NOx) reductant pump motor phase control circuit is open.
Reductant Pump Overcurrent	—	Yes / No	The parameter displays Yes if a Nitrogen Oxides (NOx) reductant pump current is too high.
Reductant Pump Speed	—	RPM	This parameter contains the actual reductant pump motor speed.
Reductant Pump Voltage Performance Malfunction	—	Yes / No	The parameter displays Yes if a Nitrogen Oxides (NOx) reductant pump motor and heater drivers supply voltage is out of range.
Reductant Purge Solenoid Valve Command	—	On/Off	This parameter displays the commanded state of the reductant line purge solenoid valve. The scan tool displays On when the reductant line purge solenoid valve is commanded ON.
Reductant Purge Solenoid Valve Control Circuit Status	—	No Malfunction Present	This parameter displays the status of the Reductant Purge Solenoid Valve Control Circuit.
Reductant Quality Sensor	—	%	This parameter displays the reductant (DEF) concentration in percent.
Reductant Range	—	km (miles)	This parameter displays the remaining distance that can be driven before the reductant tank needs to be refilled.
Reductant Sensor Module Supply Voltage	—	Okay / Out of Range	This parameter displays Out of Range if Selective Catalyst Reduction (SCR) control module supply voltage is out of range.
Reductant System Adaption	—	Active / Inactive	This parameter displays the Active if the Selective Catalyst Reduction (SCR) fast adaptation is active and running.
Reductant System Adaption Requested Warning	—	Yes / No	This parameter displays the Yes if the Selective Catalyst Reduction (SCR) warning strategy activation is requested.
Reductant System Adaption Steps	—	Counts	This parameter displays the count of the Selective Catalyst Reduction (SCR) fast adaptation steps.
Reductant System Command	—	%	This parameter displays the commanded reductant (DEF) dosing of the Selective Catalyst Reduction (SCR) system.
Reductant System Malfunction Warning Indicator Command	—	None	This parameter displays the Nitrogen Oxides (NOx) reductant system malfunction warning.
Reductant System Malfunction Warning Service Bay Test	—	Varies	This parameter displays a malfunction warning for the reductant system during a service bay test.

Parameter	System State	Expected Value	Description
Reductant System Malfunction Warning Service Bay Test Abort Reason	—	Varies	This parameter displays status of a malfunction warning abort from the reductant system during a service bay test.
Reductant System Malfunction Warning Service Bay Test Status	—	Varies	This parameter displays status of a malfunction warning from the reductant system during a service bay test.
Reductant System Malfunction Warning Service Bay Test Calculated Nitrogen Oxides Emissions Monitor Efficiency	—	%	This parameter displays Selective Catalyst Reduction (SCR) estimated average efficiency for the reductant system during a service bay test.
Reductant System Malfunction Warning Service Bay Test Nitrogen Oxides Emissions Monitor Efficiency	—	%	This parameter displays Selective Catalyst Reduction (SCR) measured average efficiency for the reductant system during a service bay test.
Reductant System Priming Test Status	—	Varies	This parameter displays Selective Catalyst Reduction (SCR) system priming and leak test status.
Reductant System Tamper Warning Service Bay Test Abort Reason	—	Not Requested, In Progress, Passed, Failed, Interrupted	This parameter contains the status of the SCR Tamper/No Tamper service bay test procedure.
Reductant System Tamper Warning Service Bay Test Result	—	Reductant System Tamper Warning Service Bay Test Result	This parameter holds the most recent abort reason for the SCR Tamper/No Tamper service bay test algorithm
Reductant Tank Temperature Sensor	—	ºC (ºF)	This parameter contains the undefaulted reductant temperature measured by a sensor that is located within the holding tank.
Reductant Tank Temperature Sensor Circuit Erratic Malfunction	—	Yes / No	The parameter displays Yes if the Nitrogen Oxides (NOx) reductant tank temperature sensor self correlated fault check failed.
Reductant Tank Temperature Sensor Circuit High Malfunction	—	Yes / No	The parameter displays Yes if the Nitrogen Oxides (NOx) reductant tank temperature sensor circuit is shorted high.
Reductant Tank Temperature Sensor Circuit Low Malfunction	—	Yes / No	The parameter displays Yes if the Nitrogen Oxides (NOx) reductant tank temperature sensor circuit is shorted low.
Reductant Tank Status	—	Full / OK / Warning / Empty	The parameter displays the state of Nitrogen Oxides (NOx) reductant holding tank.
Reductant Tank Temperature Sensor 2	—	ºC (ºF)	This parameter contains the undefaulted reductant (DEF) temperature measured by a sensor that is part of the reductant quality sensor
Reductant Tank Temperature Sensor 2 Circuit Erratic Test Status	—	Yes / No	This parameter contains the all monitors that trigger the SCR Tamper/Not Tamper Warning Strategy.
Reductant Tank Temperature Sensor 2 Circuit High Voltage Test Status	—	Yes / No	This parameter contains the all monitors that trigger the SCR Tamper/Not Tamper Warning Strategy.

Parameter	System State	Expected Value	Description
Reductant Tank Temperature Sensor 2 Circuit Low Voltage Test Status	—	Yes / No	This parameter contains the all monitors that trigger the SCR Tamper/Not Tamper Warning Strategy.
Reductant Tank Temperature Sensor 2 Circuit Performance Test Status	—	Yes / No	This parameter contains the all monitors that trigger the SCR Tamper/Not Tamper Warning Strategy.
Reductant Tank Temperature Sensor Circuit Erratic Test Status	—	Yes / No	This parameter contains the all monitors that trigger the SCR Tamper/Not Tamper Warning Strategy.
Reductant Tank Temperature Sensor Circuit High Voltage Test Status	—	Yes / No	This parameter contains the all monitors that trigger the SCR Tamper/Not Tamper Warning Strategy.
Reductant Tank Temperature Sensor Circuit Low Voltage Test Status	—	Yes / No	This parameter contains the all monitors that trigger the SCR Tamper/Not Tamper Warning Strategy.
Reductant Temperature	—	°C (°F)	This parameter displays the Reductant temperature measured by a sensor that is located within the holding tank.
Remaining Reductant in Tank	—	g	This parameter displays the current reductant remaining in the holding tank.
Redundant Odometer Memory	—	Present/Not Present	This parameter displays if there is a reductant odometer reading present in the control module.
Remaining Fuel in Tank	—	%	This parameter displays the total fuel level as a percentage of the rated capacity of the fuel tank.
Remaining Fuel in Tank	—	Liters	This parameter displays the actual total fuel volume contained in the fuel tank.
Remote Vehicle Start Disable History 1–8	—	Reason for RVS Disable	These parameters display the last eight reasons the control module disabled remote vehicle start (RVS).
Remote Vehicle Start Request Signal	—	Off	Remote Vehicle Start Request indicates the state of the request received over serial communication from the remote vehicle start (RVS) system to start the vehicle in remote mode.
Replicated Transmission OSS Signal	—	RPM	This parameter displays the Replicated Transmission Output Speed (Replicated TOS) received from the Transmission Control Module.
Sensor Reference Circuit Status Sensor Reference Circuit Status 2–4	-—	Okay	This parameter will display OK if the circuit is good or Malfunction if a short to ground, short to B+ or open circuit is present.
Sensor Reference Sensor Reference 2–5	Ignition/Vehicle » On	5 V	This parameter displays the voltage sensed on the 5 V reference circuits at the control module. The scan tool will display a higher value at higher voltage. The scan tool will display a lower value at lower voltage.

Parameter	System State	Expected Value	Description
Sensor Supply Voltage Relay Command	—	On / Off	This parameter contains the exhaust gas recirculation cooler temperature at power-up (Run/ Crank transition from low to high) from a sensor that is located before the inlet of the exhaust gas recirculation cooler heat exchanger.
Soot Mass Correction	—	#	This parameter displays the soot mass correction value caused by Continuous Regenerating Trap (CRT) effect.
Specific Humidity	—	%	This parameter displays the current specific humidity in percentage.
Start-Up Charge Air Cooler Temperature	—	°C (°F)	This parameter displays the current start-up charge air cooler temperature.
Start-Up Charge Air Cooler Inlet Temperature	—	ºC (ºF)	This parameter contains the charge air temperature (measured by a sensor that is located first in the charge air cooler stream in relationship to any other charge air cooler temperature sensors in the system.) recorded at power-up.
Start-Up Charge Air Cooler Outlet Temperature	—	ºC (ºF)	This parameter contains the charge air temperature (measured by a sensor that is located second in the charge air cooler stream in relationship to any other charge air cooler temperature sensors in the system.) recorded at power-up.
Start-Up Temperature EGR Cooler Temperature Sensor 1	—	ºC (ºF)	This parameter contains the exhaust gas recirculation cooler temperature at power-up (Run/ Crank transition from low to high) from a sensor that is located before the inlet of the exhaust gas recirculation cooler heat exchanger.
Start-Up Temperature EGR Cooler Temperature Sensor 2	—	ºC (ºF)	This parameter contains the exhaust gas recirculation cooler temperature at power-up (Run/ Crank transition from low to high) from a sensor that is located on the outlet of the exhaust gas recirculation cooler heat exchanger.
Start-Up ECT	—	°C (°F)	This parameter Indicates the engine coolant temperature at engine start up as calculated by the control module based on the signal from the ECT sensor. The scan tool will display a higher value on a warmer engine, and a lower value on a colder engine.
Start-Up Exhaust Gas Temperature Sensor 1, 2, 3, or 4	—	°C (°F)	This parameter displays the current start-up exhaust gas temperature for sensor 4.
Start-Up Fuel Temperature	—	°C (°F)	This parameter Indicates the fuel temperature at engine start up as calculated by the control module based on the signal from the fuel temperature sensor. The scan tool will display a higher value on a warmer fuel, and a lower value on a colder fuel.

Parameter	System State	Expected Value	Description
Start-Up IAT Sensor 1–3	—	°C (°F)	This parameter indicates the intake air temperature at engine start up as calculated by the control module based on the signal from the IAT sensor. The scan tool will display a higher value during warmer under hood temperatures, and a lower value during colder under hood temperatures.
Start-Up Particulate Matter Sensor Temperature	—	°C (°F)	This parameter displays the start-up particulate matter temperature in Celsius and Fahrenheit.
Starter Relay Command	—	Off	The scan tool displays ON/OFF. The scan tool displays Off until the ignition is placed into the CRANK position, then it reads On.
Starter Relay Control Circuit High Voltage Test Status	—	OK	This parameter displays the state of the starter relay control circuit. The parameter displays Malfunction if the starter relay control circuit is shorted to voltage. This parameter may not change if the scan tool is used to command the relay control circuit ON.
Starter Relay Control Circuit Low Voltage Test Status	—	OK	This parameter displays the state of the starter relay control circuit. The parameter displays Malfunction if the starter relay control circuit is shorted to ground. This parameter may not change if the scan tool is used to command the relay control circuit ON.
Starter Relay Control Circuit Open Test Status	—	OK	This parameter displays the state of the starter relay control circuit. The parameter displays Malfunction if the starter relay control circuit is open. This parameter may not change if the scan tool is used to command the relay control circuit ON.
Starter Motor Relay Control Circuit High Voltage Test Status	—	OK, Malfunction, Not Run	This parameter contains the commanded state of the starter relay output along with the status of its associated short to ground, open circuit, and short to power tests
Starter Motor Relay Control Circuit Low Voltage Test Status	—	OK, Malfunction, Not Run	This parameter contains the commanded state of the starter relay output along with the status of its associated short to ground, open circuit, and short to power tests
Starter Motor Relay Control Circuit Open Test Status	—	OK, Malfunction, Not Run	This parameter contains the commanded state of the starter relay output along with the status of its associated short to ground, open circuit, and short to power tests
TCC Control	—	Disengaged	This parameter displays the current state of the TCC.
Torque Delivered Signal	—	N•m	This parameter displays the engine torque based upon the airflow through the engine and the torque losses due to fuel shutoff. Since this is a steady state engine torque, it does not include the inertial component of engine torque.

Parameter	System State	Expected Value	Description
Total Fuel Consumed	—	Liters	This parameter displays the fuel consumed in the current drive cycle in liters.
Total Misfire	—	Counts	This parameter displays the total number of cylinder firing events that the control module detected as misfires for the last 200 crankshaft revolution sample period.
Tow/Haul Mode	—	Active / Inactive / Not Available	This parameter contains signals associated with Tow Haul Mode as selected by the driver mode determination (DMD) switches
Traction Control Status	—	Inactive	This parameter displays Active if the electronic brake and traction control module (EBTCM) is commanding traction control.
Traction Control Torque Delivered Signal	—	%	This parameter displays the estimated engine torque delivered by the powertrain, as a percentage of maximum engine torque that is provided to the ABS/TCS module.
Traction Control Torque Request Signal	—	%	This parameter displays the engine torque requested by the traction control system, as a percentage of maximum engine torque.
Transmission Inhibiting Engine Cranking	—	Yes / No	This parameter contains several signals associated with the status of the power mode and starter systems
Turbocharger Control Module Supply Voltage	—	Volts	This parameter contains the unde-faulted voltage applied to the turbocharger actuator power supply pins.
Turbocharger Vane Learned Closed Position	—	%	This is the learned position of the blades that control the airflow into the turbo charger. This parameter displays the learned closed position.
Turbocharger Van Learned Closed Position	—	Volts	This parameter displays the minimum position learned for Turbo Charger Vane position sensor when the Turbo Charger Vanes are closed.
Turbocharger Vane Learned Open Position	—	%	This is the learned position of blades that control the airflow into the turbo charger. This parameter displays the learned open position.
Turbocharger Vane Learned Open Position	—	Volts	This parameter displays the minimum position learned for Turbo Charger Vane position sensor when the Turbo Charger Vanes are open.
Turbocharger Vane Position Learn Status	—	Learned	This parameter indicates the status of the control module in learning the turbocharger vane position. The scan tool will display No if the turbocharger vane position has not been learned since the last DTC clear.
Turbocharger Vane Position Initial Learned Value	—	Counts	This parameter contains the end of line (EOL) learn span in commutation counts

Parameter	System State	Expected Value	Description
Turbocharger Vane Position Learned Value	—	Counts	This parameter contains the full span learn (FSL) in commutation counts that occurs at ignition off.
Turbocharger Vane Position Sensor	—	%	This parameter displays the current commanded state of the turbocharger vane position control solenoid valve by the control module. The scan tool will display a higher value as the solenoid is commanded open. The scan tool will display a lower value as the solenoid is commanded closed.
Turbocharger Vane Position Sensor	—	Volts	This parameter displays the voltage signal sent to the control module from the sensor. The scan tool will display a higher value as the solenoid is commanded open. The scan tool will display a lower value as the solenoid is commanded closed.
Turbocharger Vane Position Solenoid Valve Circuit High Voltage Test Status	—	OK	This parameter displays the state of the Turbocharger Vane Position Solenoid Valve circuit. The parameter displays Malfunction if the Turbocharger Vane Position Solenoid valve circuit is shorted to voltage.
Turbocharger Vane Position Solenoid Valve Circuit Low Voltage Test Status	—	OK	This parameter displays the state of the Turbocharger Vane Position Solenoid Valve circuit. The parameter displays Malfunction if the Turbocharger Vane Position Solenoid valve circuit is shorted to ground.
Turbocharger Vane Position Solenoid Valve Circuit Open Test Status	—	OK	This parameter displays the state of the Turbocharger Vane Position Solenoid Valve circuit. The parameter displays Malfunction if the Turbocharger Vane Position Solenoid valve circuit is open.
Turbocharger Vane Position Solenoid Valve Circuit Shorted Test Status	—	OK	This parameter displays the state of the Turbocharger Vane Position Solenoid Valve Circuit. The parameter displays Malfunction if the Turbocharger Vane Position Solenoid valve circuit is shorted.
Turbocharger Vane Position Solenoid Valve Command	—	%	This parameter displays the commanded duty cycle for the solenoid on variable geometry turbocharger.
Turbocharger Vane Position Solenoid Valve Control Circuit Command	—	Off	This parameter displays the commanded state of the turbocharger solenoid valve.
Turbocharger Vane Position Solenoid Valve Control Driver Overtemperature	—	No	This parameter displays the state of the turbocharger vane position solenoid valve control driver.
Turbocharger Vane Position Solenoid Valve High Control Circuit Command	—	Off	This parameter displays the commanded state of the turbocharger solenoid valve high control circuit.

Parameter	System State	Expected Value	Description
Turbocharger Vane Position Solenoid Valve High Control Circuit High Voltage Test Status	—	OK	This parameter displays the state of the Turbocharger Vane Position Solenoid Valve high control circuit. The parameter displays Malfunction if the Turbocharger Vane Position Solenoid valve high control circuit is shorted to voltage.
Turbocharger Vane Position Solenoid Valve High Control Circuit Low Voltage Test Status	—	OK	This parameter displays the state of the Turbocharger Vane Position Solenoid Valve high control circuit. The parameter displays Malfunction if the Turbocharger Vane Position Solenoid valve high control circuit is shorted to ground.
Turbocharger Vane Position Solenoid Valve High Control Circuit Open Test Status	—	OK	This parameter displays the state of the Turbocharger Vane Position Solenoid Valve high control circuit. The parameter displays Malfunction if the Turbocharger Vane Position Solenoid valve high control circuit is open.
Vehicle Speed Output Circuit 2 High Voltage Test Status	—	OK	This parameter displays the state of the Vehicle Speed Output circuit 2 control circuit. The parameter displays Malfunction if the Vehicle Speed Output circuit 2 control circuit is shorted to voltage.
Vehicle Speed Output Circuit 2 Low Voltage Test Status	—	OK	This parameter displays the state of the Vehicle Speed Output circuit 2 control circuit. The parameter displays Malfunction if the Vehicle Speed Output Circuit 2 control circuit is shorted to ground.
Vehicle Speed Output Circuit 2 Open Test Status	—	OK	This parameter displays the state of the Vehicle Speed Output circuit 2 control circuit. The parameter displays Malfunction if the Vehicle Speed Output circuit 2 control circuit is open.
Vehicle Speed Sensor	—	km/h/MPH	This parameter indicates the vehicle speed as calculated by the control module based on a signal from the vehicle speed sensor (VSS). The scan tool will display a higher value at higher vehicle speeds, and a lower value at lower vehicle speeds.
Vehicle Speed When Engine Overspeed Detected	Engine Idling	Km/h mph	This parameter displays the Vehicle Speed When Engine Overspeed Detected.
Wait to Start Indicator Command	—	On / Off	This parameter displays On when a glow plug indication request is active, and the wait-to-start lamp is commanded on. The wait to start indicator will not illuminate during post-start glow plug operation.
Wait to Start Indicator Control Circuit High Test Status	—	Okay, Malfunction, Not Run	This parameter displays the state of the wait to start indicator control circuit. The parameter displays Malfunction if the wait to start indicator control circuit is shorted to voltage.

Parameter	System State	Expected Value	Description
Wait to Start Indicator Control Circuit Low Test Status	—	Okay, Malfunction, Not Run	This parameter displays the state of the wait to start indicator control circuit. The parameter displays Malfunction if the wait to start indicator control circuit is shorted to ground.
Wait to Start Indicator Control Circuit Open Test Status	—	Okay, Malfunction, Not Run	This parameter displays the state of the wait to start indicator control circuit. The parameter displays Malfunction if the wait to start indicator control circuit is open.
Warm-ups Since DTC Cleared	—	Counts	This parameter indicates the number of warm up cycles that have occurred Since DTCs were cleared. The scan tool will display a higher counts as more warm up cycles have occurred since the DTCs were cleared.
Warm-ups without Emission Malfunctions	—	Counts	This parameter indicates the number of warm up cycles that have occurred without an emission fault present. The scan tool will display a 0 if a malfunction has occurred. The scan tool will display a higher count if a number of warm up cycles have occurred without an emission malfunction.
Warm-ups without Non-emission Malfunctions	—	Counts	This parameter indicates the number of warm up cycles that have occurred without a non-emission fault present. The scan tool will display a 0 if a malfunction has occurred. The scan tool will display a higher count if a number of warm up cycles have occurred without a non-emission malfunction.
Water in Fuel	—	No	This parameter indicates if there is water in the fuel.
Water in Fuel Indicator Command	—	Off	This parameter indicates if water in the fuel indicator is On or Off.
Water in Fuel Sensor	—	Volts	This parameter displays the water in fuel sensor voltage input.

Output Control

Parameter	Description
This is a comprehensive list. Not all output controls listed are available for all applications.	
A/C Compressor Clutch Relay	This device control is used to override the state of the air conditioning compressor output.
Ambient Air Temperature Calculation Reset	This device control is used to reset the estimated ambient air temperature value to the current sensor value following a service repair.
BARO Sensor Reset	This device control is used to reset learned barometric pressure values in case of either an ECU or barometric pressure sensor replacement.
Brake Pedal Position Sensor Learn	This device control is used to reset the initialized values for the brake pedal fully released learned position.
Catalyst Reset	This device control is used to reset learned values in case of a diesel oxidation catalyst replacement. The engine must be OFF and Ignition ON.
Compression Test Starter Relay	This device control is used to set up the internal combustion engine for a compression test.
Coolant Fill	This device control is used to start an automatic coolant fill service routine that will ensure proper fill and de-aeration of the cooling system.

Parameter	Description
Cooling Fan Motor	This device control is used to override the state of cooling fan duty cycle control output.
Crankshaft Position Reluctor Ring Learned Values Reset	This device control is used to reset the crank wheel adaptation values in case of an ECU or crank wheel replacement.
Crankshaft Position Variation Learn	This device control is used to activate the crankshaft position variation learn (CASE) algorithm which calculates the reference pulse correction factors for the misfire diagnostic.
Cylinder 1–8 Fuel Injector Correction Value Reset	This device control is to be used to reset the NVC and ZFC values to zero if one or more of the fuel injectors have been replaced.
Cylinder 1–8 Injector Flow Identifier	This device control contains the data that the Engine Control Module will need in order to do proper Injector Fuel Quantity adjustments. If a new ECM is being installed, this data shall be read from the old ECM and transferred to the new ECM. If an injector is replaced, the injector code must be downloaded to the ECM
Cylinder Balance Rate Monitor	This device control is used to enable or disable Cylinder Fuel Balancing.
Cylinder Power Balance	This device control disables each fuel injector at any engine or vehicle speed. The device control will not change unless changed or cancelled by the scan tool.
DPF Pressure Sensor Reset	This device control is used to reset learned values in case of a diesel particulate filter pressure sensor replacement.
DPF Regeneration Enable	This function enables a DPF Regeneration when the vehicle meets the conditions for running. This function will by-pass the normal soot model, so the next time the vehicle is under the conditions for an active regeneration to take place, the ECM will go ahead and initiate the regeneration event. This device control is used to Force the Diesel Particulate Filter to perform regeneration. The Device Control sets an indication in the ECU that the controller shall perform regeneration, the next time the driving condition are met. The Regeneration shall be performed even if the tool is no longer connected to the vehicle.
DPF Regeneration Inhibit	This device control is used to inhibit the Diesel Particulate Filter to perform regeneration, even if the driving conditions are met. The inhibit function shall only work when the tool is connected to the vehicle.
DPF Reset	This device control is used to reset learned values in case of a diesel particulate filter replacement.
DPF Service Regeneration	This device control enables a DPF Regeneration. The engine coolant must be greater than 70–115°C (158–239°F). Vehicle must be in Park. Ambient temperature must be greater than −30°C (−22°F). Brake pedal and accelerator must be in the released position. The scan tool will display all inhibit reasons. The scan tool must remain connected until test is complete. This function takes approximately 35 minutes to complete. During this procedure the RPM will slowly increase to 2,500 RPM and remain there for approximately 25 minutes.
EGR	This device control is used to verify functionality of the Exhaust Gas Recirculation Valve by allowing the Exhaust Gas Recirculation Valve output to be commanded to a specific duty cycle.
EGR Cooler Bypass Motor	This device control is used to verify functionality of the Exhaust Gas Recirculation (EGR) Cooler Bypass Valve system by allowing the EGR Cooler Bypass Valve output to be commanded to a specific position.
EGR Cooler Bypass Valve	This device control is used to verify functionality of the Exhaust Gas Recirculation (EGR) Cooler Bypass Valve system by allowing the EGR Cooler Bypass Valve output to be commanded to a specific position
EGR Valve	This device control is used to verify functionality of the Exhaust Gas Recirculation (EGR) system by allowing the Exhaust Gas Recirculation output to be commanded to a specific lift.
Engine Compression Quick Test	This device control is used to initiate the semi-automatic compression test on Diesel engines.
Engine Controls Ignition Relay	This device control is used to override the state of the Powertrain Relay.
Engine Oil Life Reset	This device control contains the engine oil remaining life determined from a calibration based upon the effective engine revolutions and the distance driven since the last oil change. This device control may be used to reset the engine oil remaining life to 100% after an oil change or to any other value when replacing an engine control module.
Engine Oil Pressure Control Solenoid Valve	This device control is used to override the state of the variable displacement oil pump. When the variable displacement oil pump is turned ON, the oil pump will be commanded to a low pressure state.
Engine Speed	This device control is used to override the idle engine speed.

Parameter	Description
Exhaust Aftertreatment Data Reset	This device control is used to reset the exhaust aftertreatment fuel injector OEM data in case of a replacement.
Exhaust Aftertreatment Fuel Injector	This device control is used to verify functionality of the Exhaust Aftertreatment Fuel Injector by allowing Exhaust Aftertreatment Fuel Injector output to be commanded to a specific duty cycle.
Exhaust Aftertreatment Fuel Injector Cleaning Procedure	This device control is used to trigger the Exhaust Aftertreatment Fuel Injector tip cleaning procedure.
Exhaust Aftertreatment Fuel Injector Flow Test	This device control is used to trigger the Exhaust Aftertreatment Fuel Injector to be commanded on for a calibrateable duration and a calibrateable HC injection quantity in order to test the flow of the injector.
Exhaust Gas Recirculation	This device control is used to verify functionality of the Exhaust Gas Recirculation (EGR) system by allowing the Exhaust Gas Recirculation output to be commanded to a specific lift.
Exhaust Gas Temperature Sensor Reset	This device control is used to reset the SCR (Selective Catalytic Reduction) Temperature Sensor data in case of a replacement.
Fuel Filter Life Reset	This device control resets the fuel filter life remaining to 100%.
Fuel Injection Small Quantity Data Reset	This device control is used to reset the learned values of the small quantity adjustment (SQA) map in case of a fuel rail pressure sensor replacement.
Fuel Injection Small Quantity Learning Odometer Reset	This device control is used to initialize small quantity learn internal odometer to a default value.
Fuel Heater Relay	This device control is used to override the state of the Fuel Filter Heater output.
Fuel Injector Balance	This feature will allow the technician to inspect the fuel system for leaks after servicing the fuel system or after any other service procedure that required disconnection or removal of fuel system components.
Fuel Injector Correction Value Preset	This device control resets all injector NVC and ZFC values to the default value. This device control is to be used if the old ECM values cannot be transferred to the new ECM after replacement.
Fuel Pressure Regulator 1	This device control is intended for use on a Direct Injection (DI) high pressure fuel supply system to activate the fuel pressure regulator 1 at ignition ON, engine OFF. Both the low side and high side of the regulator are controlled together. Commanding the regulator to ON will modulate the high side driver to a calibratible “maximum” duty cycle. (Note: As this is an electrical circuit test, a regulator solenoid commanded to ON does not necessarily equate to the regulator state at maximum fuel pressure.)
Fuel Pressure Regulator 2	This device control is intended for use on a Direct Injection (DI) high pressure fuel supply system to activate the fuel pressure regulator 2 at ignition ON, engine OFF. Both the low side and high side of the regulator are controlled together. Commanding the regulator to ON will modulate the high side driver to a calibratible “maximum” duty cycle. (Note: As this is an electrical circuit test, a regulator solenoid commanded to ON does not necessarily equate to the regulator state at maximum fuel pressure.)
Fuel Pump Relay	This device control is used to override the state of the fuel pump output.
Fuel Pump 2 Relay	This device control is used to override the state of the electric secondary transfer pump output.
Fuel Rail Pressure	This device control is intended for use on a Direct Injection (DI) high pressure fuel supply system to override the commanded fuel high pressure output from the powertrain controller.
Fuel Trim Enable	This device control is used to deactivate the Fuel Mass Observer (FMO).
Fuel Trim Reset	This device control is used to reset the Fuel Mass Observer data in case of a replacement.
Generator L-Terminal	The commanded states are ON and OFF. Selecting OFF commands the ECM to turn OFF the generator and stop generating an output voltage.
High Side Driver 1	This device control is used to override the state of the Shared High Side Driver 1 output.
High Side Driver 2	This device control is used to override the state of the Shared High Side Driver 2 output.
HO2S Heater Sensor 1	This device control is used to override the duty cycle of the oxygen sensor heaters.
Intake Air Flow Valve Motor	This function increases or decreases the position of the IAF valve.
Intake Air Flow Valve Position	This parameter displays the actual position of the intake air flow valve.
Intake Manifold Runner Control Valve	This device control is used to override the state of the intake manifold runner control output.

Parameter	Description
Malfunction Indicator Lamp (MIL)	This device control is used to either turn the Malfunction Indicator Lamp (MIL) on or off.
Misfire Graphic	This device control produces a misfire graphic while the engine is running.
NOx Catalyst Reductant Loading Reset	This device control is used to reset the adaptive values for the SCR (Selective Catalytic Reduction) data.
NOx Catalyst Reset	This device control is used to reset the Selective Catalytic Reduction (SCR) data in case of a replacement.
NOx Sensor 1 Heater- Engine Running	This device control is used to control the duty cycle of the NOx Sensor 1 Heater with the engine running. The Duty Cycle is fixed at a predetermined value and is controlled for a predetermined amount of time.
NOx Sensor 1 Reset	This device control is used to reset the NOx Sensor 1 data in case of a replacement. The engine must be Off and the Ignition On.
NOx Sensor 2 Heater- Engine Running	This device control is used to control the duty cycle of the NOx Sensor 2 Heater with the engine running. The Duty Cycle is fixed at a predetermined value and is controlled for a predetermined amount of time.
NOx Sensor 2 Reset	This device control is used to reset the NOx Sensor 2 data in case of a replacement. The engine must be OFF and the Ignition ON.
Particulate Matter Sensor Service Regeneration	This device control is used to force a particulate matter sensor measurement cycle, consisting of a particulate sensor probe regeneration and subsequent soot accumulation measurement. The system will return to normal control after one measurement cycle is successfully completed. One full measurement cycle can take 15 minutes or more to complete depending up the particulate filter state of health.
Pilot Injection Balance Procedure	This device control disables each fuel injector pilot injection. Device Control can be changed at any engine or vehicle speed. The device control will not change unless changed or cancelled by the scan tool.
Positive Crankcase Ventilation Heater	This device control is used to turn the crankcase ventilation heater output ON or OFF.
Prime Fuel Pump	This device control is used to override the state of the fuel pump output.
Programming History	This device control is used to view the history buffer entries for the primary calibration part in the controller.
Reductant Fluid Quality Test	This device control is used to force a Selective Catalyst Reduction (SCR) Service Quality Check.
Reductant Fluid Tank Level Reset	This device control is used to Reset the Reductant Fluid Tank Level.
Reductant Heater 1	This device control is used to override the state of the Reductant Heater 1. The scan tool disables the test when the following control limits are exceeded. • Reductant System DTC is set. • The exhaust temperature is too low. • Ignition voltage is too low. • Ignition voltage is too high.
Reductant Heater 2	This device control is used to override the state of the Reductant Heater 2.
Reductant Heater 3	This device control is used to override the state of the Reductant Heater 3.
Reductant Injection Quantity Test	This device control is used to inject a specific amount of reductant from the reductant injector. A system purge will be required once the test is complete.
Reductant Injector	This device control is used to verify functionality of the NOx Reductant Injector by allowing NOx Reductant Injector output to be commanded to a specific duty cycle.
Reductant Injector Reset	This device control is used to reset the Reductant Injector variables after the Injector is replaced.
Reductant Pump	This device control is used to verify functionality of the NOx Reductant Pump by allowing NOx Reductant Pump output to be commanded to a specific duty cycle.
Reductant Purge	This device control is used to purge the reductant lines of fluid.
Reductant Purge Valve	This device control is used to command the state of the NOx Reductant Line Purge valve.
Reductant System Tamper Warning Service Bay Test	This device control is used to force a SCR (Selective Catalyst Reduction) service bay test.

Parameter	Description
Reductant System Data Reset	This device control is used to reset the ECM data in case of a replacement.
Reductant System Leak Test	This device control is used to pressurize the reductant system in order to perform a visual inspection for leaks. A system purge will be required once the test is complete.
Reductant System Malfunction Warning Service Bay Test	This device control triggers the Selective Catalytic Reduction (SCR) Tamper Service Bay Test.
Reductant System Reset	This device control is used to reset the Reductant Module data in case of a replacement.
Remote Vehicle Start Disable History Reset	This device control is used to trigger the reset of the last eight reasons that powertrain has disabled remote vehicle start (RVS).
Sensor Supply Voltage Relay	This device control is used to control the sensor bus supply relay.
Starter Relay	This device control is used to override the state of the Starter Relay output. Fuel is disabled to prevent the engine from starting if the starter relay output is commanded On.
Total Fuel Consumed Reset	This device control contains the after treatment related data parameter that needs to be transferred in case of an ECM replacement.
Turbocharger Learn	This device control is used when the Turbocharger assembly, Vane position control solenoid valve, Vane position sensor is replaced, or repairs that disturb turbocharger components.
Turbocharger Vane Position	This device control adjusts the turbocharger vane position in 5 percent increments from 0–100 percent. The device control will be aborted if engine speed is above idle or if the coolant temperature is too cold.
Turbocharger Vane Position Actuator	This device control is used to control the duty cycle for a variable geometry turbocharger .
Turbocharger Vane Position Learn	This device control triggers the Variable Geometry Turbo (VGT) Actuator Learn in the event of a turbocharger or actuator replacement.
Turbocharger Vane Position Solenoid Valve	This device control cycles the turbocharger vane position solenoid to 100 percent boost and back to 0 percent boost. The device control is limited to engine speeds less than 1,500 RPM and will be disabled if DTC P0047 or P0048 are set.
Wait to Start Indicator	This device control is used to turn the Glow Plug (Wait to start) Lamp ON/OFF.

K219 Lighting Control Module: Scan Tool Information

Lighting Control Module — Data Display — Front Exterior Lighting Data

Parameter	System State	Expected Value	Description
Operating Conditions: Ignition ON/Vehicle in Service Mode, Vehicle in Park, All Doors Closed			
Left Daytime Running Lamps	—	Off	The scan tool displays On or Off.
Right Daytime Running Lamps	—	Off	The scan tool displays On or Off.
Left Low Beam Command	—	Inactive	The scan tool displays Active or Inactive.
Right Low Beam Command	—	Inactive	The scan tool displays Active or Inactive.
Left Front Turn Signal Lamp Command	—	Off	The scan tool displays On or Off.
Right Front Turn Signal Lamp Command	—	Off	The scan tool displays On or Off.
Left Park Lamps Command	—	Off	The scan tool displays On or Off.
Right Park Lamps Command	—	Off	The scan tool displays On or Off.

Lighting Control Module — Data Display — Rear Exterior Lighting Data

Parameter	System State	Expected Value	Description
Operating Conditions: Ignition ON/Vehicle in Service Mode, Vehicle in Park, All Doors Closed			
Left Turn Signal Lamps	—	Off	The scan tool displays On or Off.
Right Turn Signal Lamps	—	Off	The scan tool displays On or Off.
Left Tail Lamp Driver	—	Off	The scan tool displays On or Off.
Right Tail Lamp Driver	—	Off	The scan tool displays On or Off.
Center High Mounted Stop Lamp Driver	—	Off	The scan tool displays On or Off.
License Plate Lamp Circuit Driver	—	Off	The scan tool displays On or Off.

Lighting Control Module — Data Display — Side Exterior Lighting Data

Parameter	System State	Expected Value	Description
Operating Conditions: Ignition ON/Vehicle in Service Mode, Vehicle in Park, All Doors Closed			
Left Side Marker Lamp Command	—	Off	The scan tool displays On or Off.
Right Side Marker Lamp Command	—	Off	The scan tool displays On or Off.
Left Turn Signal Repeater Lamp Command	—	Off	The scan tool displays On or Off.
Right Turn Signal Repeater Lamp Command	—	Off	The scan tool displays On or Off.

Lighting Control Module — Data Display — Indicator Data

Parameter	System State	Expected Value	Description
Operating Conditions: Ignition ON/Vehicle in Service Mode, Vehicle in Park, All Doors Closed			
Daytime Running Lamps Indicator	—	Off	The scan tool displays On or Off.
Front Park Lamps Indicator	—	Off	The scan tool displays On or Off.
Headlamp High Beam Indicator	—	Inactive	The scan tool displays Active or Inactive.
Left Turn Signal Indicator	—	Off	The scan tool displays On or Off.
Right Turn Signal Indicator	—	Off	The scan tool displays On or Off.
Left Front Turn Signal Lamp Malfunction Indicator	—	Off	The scan tool displays On or Off.
Left Rear Turn Signal Lamp Malfunction Indicator	—	Off	The scan tool displays On or Off.
Right Front Turn Signal Lamp Malfunction Indicator	—	Off	The scan tool displays On or Off.
Right Rear Turn Signal Lamp Malfunction Indicator	—	Off	The scan tool displays On or Off.

Lighting Control Module — Exterior Lighting — Scan Tool Output Controls

Output Control	Description
Center High Mounted Stop Lamp	This output control is used to activate the center high mounted stop lamp when selecting On. The center high mounted stop lamp should illuminate until commanded Off.
Left Stop Lamp	This output control is used to activate the left stop lamp when selecting On. The left stop lamp should illuminate until commanded Off.
Right Stop Lamp	This output control is used to activate the right stop lamp when selecting On. The right stop lamp should illuminate until commanded Off.
License Plate Lamps	This output control is used to activate the license plate lamps when selecting On. The license plate lamps should illuminate until commanded Off.
Backup Lamps	This output control is used to activate the backup lamps when selecting On. The backup lamps should illuminate until commanded Off.
Left Front Park Lamp Status	This output control is used to activate the left park lamps when selecting On. The left park lamps should illuminate until commanded Off.
Right Front Park Lamp Status	This output control is used to activate the right park lamps when selecting On. The right park lamps should illuminate until commanded Off.
Left Daytime Running Lamps	This output control is used to activate the left daytime running lamps when selecting On. The left daytime running lamps should illuminate until commanded Off.
Right Daytime Running Lamps	This output control is used to activate the right daytime running lamps when selecting On. The right daytime running lamps should illuminate until commanded Off.
Left Auxiliary Daytime Running Lamps	This output control is used to activate the left auxiliary daytime running lamps when selecting On. The left auxiliary daytime running lamps should illuminate until commanded Off.
Right Auxiliary Daytime Running Lamps	This output control is used to activate the right auxiliary daytime running lamps when selecting On. The right auxiliary daytime running lamps should illuminate until commanded Off.
Left Front Auxiliary Park Lamp Command	This output control is used to activate the left front auxiliary park lamp when selecting On. The left front auxiliary park lamp should illuminate until commanded Off.
Right Front Auxiliary Park Lamp Command	This output control is used to activate the right front auxiliary park lamp when selecting On. The right front auxiliary park lamp should illuminate until commanded Off.
Left Front Turn Signal Lamp Command	This output control is used to activate the left front turn signal lamp when selecting On. The left front turn signal lamp should illuminate until commanded Off.
Right Front Turn Signal Lamp Command	This output control is used to activate the right front turn signal lamp when selecting On. The right front turn signal lamp should illuminate until commanded Off.
Left Turn Signal Repeater Lamp Command	This output control is used to activate the left turn signal repeater lamp when selecting On. The left turn signal repeater lamp should illuminate until commanded Off.
Right Turn Signal Repeater Lamp Command	This output control is used to activate the right turn signal repeater lamp when selecting On. The right turn signal repeater lamp should illuminate until commanded Off.
Left Rear Turn Signal Lamp	This output control is used to activate the left rear turn signal lamp when selecting On. The left rear turn signal lamp should illuminate until commanded Off.
Right Rear Turn Signal Lamp	This output control is used to activate the right rear turn signal lamp when selecting On. The right rear turn signal lamp should illuminate until commanded Off.

K29FV Front Seat Heater Vent Control Module: Scan Tool Information

Front Seat Heating Control Module Scan Tool Data Parameters

Parameter	Expected Values	Description
Operating Conditions: Engine Running		
Seat Heating/Venting/Cooling Load Shed	Inactive / Active	When this parameter is active it indicates the Heating/Venting/ System is shutdown to reduce strain on the vehicle electrical system which is experiencing too high of a current draw
Left Front Seat Heating/Venting/ Cooling Operating Conditions	Remote Vehicle Start / Automatic / Manual / Autostop Request	The functional behavior of heated seats is dependent on its determined operational state. This parameter indicates the defined state which it is operating in.

Parameter	Expected Values	Description
Left Front Seat Heating/Venting/ Cooling Switch	Inactive / Active	The Heated/Vented switch assembly contains a number of switches affecting the operation of the Heated Vented Seats. This parameter indicates when any one of the switches is active and is persistent as long as the switch is pressed.
Left Front Seat Heating/Venting/ Cooling Requested Mode	Off / Seat Back Heating / Seat Back and Cushion Heating / Seat Venting/ Cooling	This parameter indicates the type of Heated/Vented Seat function being requested , as determined by the BCM tracking various inputs
Left Front Seat Heating/Venting/ Cooling Requested Level	Off / High / Medium / Low	This parameter indicates the type of Heated/Vented Seat level of intensity being requested as determined by the BCM tracking various inputs
Left Front Seat Heating/Venting/ Cooling Mode	Off / Seat Back Heating / Seat Back and Cushion Heating / Seat Venting/ Cooling	This parameter indicates the type of Heated/Vented Seat function being applied as commanded by the BCM software based on a number of factors
Left Front Seat Heating/Venting/ Cooling Level	Off / High / Medium / Low	This parameter indicates the type of Heated/Vented Seat level of intensity being applied as commanded by the BCM software based on a number of factors.
Right Front Seat Heating/Venting/ Cooling Operating Conditions	Remote Vehicle Start / Automatic / Manual / Autostop Request	The functional behavior of heated seats is dependent on its determined operational state. This parameter indicates the defined state which it is operating in.
Right Front Seat Heating/Venting/ Cooling Switch	Inactive / Active	The Heated/Vented switch assembly contains a number of switches affecting the operation of the Heated Vented Seats. This parameter indicates when any one of the switches is active and is persistent as long as the switch is pressed.
Right Front Seat Heating/Venting/ Cooling Requested Mode	Off / Seat Back Heating / Seat Back and Cushion Heating / Seat Venting/ Cooling	This parameter indicates the type of Heated/Vented Seat function being requested, as determined by the BCM tracking various inputs
Right Front Seat Heating/Venting/ Cooling Requested Level	Off / High / Medium / Low	This parameter indicates the type of Heated/Vented Seat level of intensity being requested as determined by the BCM tracking various inputs
Right Front Seat Heating/Venting/ Cooling Mode	Off / Seat Back Heating / Seat Back and Cushion Heating / Seat Venting/ Cooling	This parameter indicates the type of Heated/Vented Seat function being applied as commanded by the BCM software based on a number of factors
Right Front Seat Heating/Venting/ Cooling Level	Off / High / Medium / Low	This parameter indicates the type of Heated/Vented Seat level of intensity being applied as commanded by the BCM software based on a number of factors.

Front Seat Heating Control Module Scan Tool Output Controls

Control Functions	Description
Operating Conditions: Engine Running	
Left Front Seat Heating	This output control is used to command the left front seat heater elements On.
Right Front Seat Heating	This output control is used to command the right front seat heater elements On.
Left Front Seat Blower Command	This output control is used to command the left front seat blower On.
Right Front Seat Blower Command	This output control is used to command the right front seat blower On.

K29RV Rear Seat Heater Vent Control Module: Scan Tool Information

Rear Seat Heating Control Module Scan Tool Data Parameters

Parameter	Expected Values	Description
Operating Conditions: Engine Running		
Seat Heating/Venting/Cooling Load Shed	Inactive / Active	When this parameter is active it indicates the Heating/Venting/ System is shutdown to reduce strain on the vehicle electrical system which is experiencing too high of a current draw
Left Rear Seat Heating/Venting/ Cooling Operating Conditions	Remote Vehicle Start / Automatic / Manual / Autostop Request	The functional behavior of heated seats is dependent on its determined operational state. This parameter indicates the defined state which it is operating in.
Left Rear Seat Heating/Venting/ Cooling Switch	Inactive / Active	The Heated/Vented switch assembly contains a number of switches affecting the operation of the Heated Vented Seats. This parameter indicates when any one of the switches is active and is persistent as long as the switch is pressed.
Left Rear Seat Heating/Venting/ Cooling Requested Mode	Off / Seat Back Heating / Seat Back and Cushion Heating / Seat Venting/ Cooling	This parameter indicates the type of Heated/Vented Seat function being requested , as determined by the BCM tracking various inputs
Left Rear Seat Heating/Venting/ Cooling Requested Level	Off / High / Medium / Low	This parameter indicates the type of Heated/Vented Seat level of intensity being requested as determined by the BCM tracking various inputs
Left Rear Seat Heating/Venting/ Cooling Mode	Off / Seat Back Heating / Seat Back and Cushion Heating / Seat Venting/ Cooling	This parameter indicates the type of Heated/Vented Seat function being applied as commanded by the BCM software based on a number of factors
Left Rear Seat Heating/Venting/ Cooling Level	Off / High / Medium / Low	This parameter indicates the type of Heated/Vented Seat level of intensity being applied as commanded by the BCM software based on a number of factors.
Right Rear Seat Heating/Venting/ Cooling Operating Conditions	Remote Vehicle Start / Automatic / Manual / Autostop Request	The functional behavior of heated seats is dependent on its determined operational state. This parameter indicates the defined state which it is operating in.
Right Rear Seat Heating/Venting/ Cooling Switch	Inactive / Active	The Heated/Vented switch assembly contains a number of switches affecting the operation of the Heated Vented Seats. This parameter indicates when any one of the switches is active and is persistent as long as the switch is pressed.
Right Rear Seat Heating/Venting/ Cooling Requested Mode	Off / Seat Back Heating / Seat Back and Cushion Heating / Seat Venting/ Cooling	This parameter indicates the type of Heated/Vented Seat function being requested, as determined by the BCM tracking various inputs
Right Rear Seat Heating/Venting/ Cooling Requested Level	Off / High / Medium / Low	This parameter indicates the type of Heated/Vented Seat level of intensity being requested as determined by the BCM tracking various inputs
Right Rear Seat Heating/Venting/ Cooling Mode	Off / Seat Back Heating / Seat Back and Cushion Heating / Seat Venting/ Cooling	This parameter indicates the type of Heated/Vented Seat function being applied as commanded by the BCM software based on a number of factors
Right Rear Seat Heating/Venting/ Cooling Level	Off / High / Medium / Low	This parameter indicates the type of Heated/Vented Seat level of intensity being applied as commanded by the BCM software based on a number of factors.

Rear Seat Heating Control Module Scan Tool Output Controls

Control Functions	Description
Operating Conditions: Engine Running	
Left Rear Seat Heating	This output control is used to command the left rear seat heater elements On.
Right Rear Seat Heating	This output control is used to command the right rear seat heater elements On.
Left Rear Seat Blower Command	This output control is used to command the left rear seat blower On.
Right Rear Seat Blower Command	This output control is used to command the right rear seat blower On.

K36 Restraints Control Module: Scan Tool Information

Note: Some parameters and values in the table below may not apply to every vehicle.

Restraints Control Module Scan Tool Data Parameters

Parameter	Expected Value	Definition
Operating Conditions: Ignition ON		
2nd Row Left Seat Belt Reminder Sensor Pad Enable Status	Disabled/Enabled	The scan tool displays if the left rear seat belt reminder sensor pad is enabled to the RCM.
2nd Row Left Seat Belt Reminder Sensor Pad Learn Status	Learned/Not Learned	The scan tool displays Learned or Not Learned. Learned is displayed if the left rear seat belt reminder sensor pad has been learned by the RCM.
2nd Row Left Seat Belt Status	Buckled/Unbuckled	The scan tool displays Buckled or Unbuckled. This is the state of the left rear seat belt switch when the seat belt is buckled or unbuckled.
2nd Row Middle Seat Belt Reminder Sensor Pad Enable Status	Disabled/Enabled	The scan tool displays if the rear middle seat belt reminder sensor pad is enabled to the RCM.
2nd Row Middle Seat Belt Reminder Sensor Pad Learn Status	Learned/Not Learned	The scan tool displays Learned or Not Learned. Learned is displayed if the rear middle seat belt reminder sensor pad has been learned by the RCM.
2nd Row Middle Seat Belt Status	Buckled/Unbuckled	The scan tool displays Buckled or Unbuckled. This is the state of the middle rear seat belt switch when the seat belt is buckled or unbuckled.
2nd Row Middle Seat Belt Reminder Sensor Pad Enable Status	Disabled/Enabled	The scan tool displays if the rear right seat belt reminder sensor pad is enabled to the RCM.
2nd Row Middle Seat Belt Reminder Sensor Pad Learn Status	Learned/Not Learned	The scan tool displays Learned or Not Learned. Learned is displayed if the rear right seat belt reminder sensor pad has been learned by the RCM.
2nd Row Right Seat Belt Status	Buckled/Unbuckled	The scan tool displays Buckled or Unbuckled. This is the state of the right rear seat belt switch when the seat belt is buckled or unbuckled.
Air Bag Malfunction Indicator	On/Off/Flashes	The scan tool will display On or Flashes if there is a problem with the SIR system. Any problems within the SIR system will illuminate the air bag indicator. The indicator will either flash or stay on.
Base Model Part Number	Varies, 8 Digit Number	The scan tool displays the part number of the RCM which is stored in non volatile memory.
Calibration Part Number	Varies, 8 Digit Number	The scan tool displays the part number of the calibration file in the RCM.
Deployment Loop 1-18 Enable Status	Enabled/Disabled	The scan tool displays Enabled or Disabled. This is the status of the air bag or pretensioner.
Deployment Loop 1-18 Learn Status	Learned/Not Learned	The scan tool displays Learned or Not learned. Learned is displayed if the RCM has defined the number loop programmed from an air bag or pretensioner.
Deployment Loop 1-18 Resistance	1.44–4.25 Ohms	The scan tool displays the resistance of the learned loop of the air bag or pretensioner when connected to the RCM.
Deployment Loop 1-18 Type	Varies	The scan tool displays the name of the air bag or pretensioner associated with the loop type 1–18.
Driver Seat Belt Reminder Indicator	On/Off	The scan tool displays On if this indicator is on. If the indicator is on it means the seat belt has not been buckled.
Driver Seat Belt Sensor Enable Status	Enabled/Disabled	The scan tool displays if the seat belt sensor in the seat belt buckle is enabled to the RCM.
Driver Seat Belt Sensor Learn Status	Learned/Not learned	The scan tool displays Learned or Not Learned. Learned is displayed if the driver seat belt sensor has been learned by the RCM.

Parameter	Expected Value	Definition
Driver Seat Belt Status	Buckled/Unbuckled	The scan tool displays Buckled or Unbuckled. This is the state of the driver seat belt switch when the seat belt is buckled or unbuckled.
Driver Seat Position Sensor	Rearward/Forward	The scan tool will display if the driver seat is forward or rearward of the sensor set position.
Driver Seat Position Sensor Enable Status	Enabled/Disabled	The scan tool displays if the seat position sensor is enabled to the RCM.
Driver Seat Position Sensor Learn Status	Learned/Not Learned	The scan tool displays Learned or Not Learned. Learned is displayed if the driver seat position sensor has been learned by the RCM.
End Model Part Number	Varies, 8 Digit Number	The scan tool displays the part number of the RCM in production.
Impact Sensor 1-8 Enable Status	Enabled/Disabled	The scan tool displays Enabled or Disabled This is the status of the impact sensor.
Impact Sensor 1-8 Learn Status	Learned/Not Learned	The scan tool displays Learned or Not learned. Learned is displayed if the RCM has learned and has assigned a number to that impact sensor.
Impact Sensor 1-8 Type	Equipped/Not Equipped	The scan tool displays the name of the impact sensor associated with the type 1–8.
Restraint Control Module Module Primary Key	Hex Value	The scan tool indicates the primary key Hex value.
Manufacturer's Traceability Number	Varies, 16 Digit Number	The scan tool displays the 16 digit traceability number in the RCM.
Module Setup	Incomplete/Complete	The scan tool indicates if the RCM is set up.
Passenger Air Bag Disabled Switch	On/Off	The scan tool displays Off when the customer manually turns the passenger airbag off with this switch.
Passenger Air Bag Off Indicator	On/Off	The scan tool displays Off when the passenger indicator is not illuminated. This indicator is off when the disable switch is in the off position or no one is sitting in the passenger seat.
Passenger Air Bag On Indicator	On/Off	The scan tool displays On when the passenger indicator is illuminated. This indicator is on when the disable switch is in the on position and someone is sitting in the passenger seat.
Passenger Air Bag Status	Enabled/Disabled	The scan tool displays if the passenger air bag is enabled to the RCM.
Passenger Air Bag Disable Indicator Enable Status	Enabled/Disabled	The scan tool displays if the passenger air bag disable indicator is enabled to the RCM.
Passenger Air Bag Disable Indicator Learn Status	Learned/Not Learned	The scan tool displays Learned or Not Learned. Learned is displayed if the RCM has learned the status of the passenger air bag disable indicator.
Passenger Air Bag Disable Switch Enable Status	Enabled/Disabled	The scan tool displays if the passenger air bag disable switch is enabled to the RCM.
Passenger Air Bag Disable Switch Learn Status	Learned/Not Learned	The scan tool displays Learned or Not Learned. Learned is displayed if the RCM has learned the status of the passenger air bag disable switch.
Passenger Air Bag Enable Indicator Enable Status	Enabled/Disabled	The scan tool displays if the passenger air bag enable indicator is enabled to the RCM.
Passenger Air Bag Enable Indicator Learn Status	Learned/Not Learned	The scan tool displays Learned or Not Learned. Learned is displayed if the RCM has learned the status of the passenger air bag enable indicator.
Passenger Classification	00–07	The scan tool will display what type of individual is sitting in the passenger seat.
Passenger Presence Detection System Enable Status	Enabled/Disabled	The scan tool displays if the restraint occupation classification system is enabled to the RCM.
Passenger Presence Detection System Learn Status	Learned/Not Learned	The scan tool displays Learned or Not Learned. Learned is displayed if the RCM has learned the passenger presence system.

Parameter	Expected Value	Definition
Passenger Presence Detection System Reporting DTC(s)	Yes/No	The RCM will report if there are DTCs set in the passenger presence module.
Passenger Seat Belt Reminder Indicator	On/Off	The scan tool displays On if this indicator is on. If the indicator is on it means the seat belt has not been buckled.
Passenger Seat Belt Reminder Indicator Enable Status	Disabled/Enabled	The scan tool displays if the passenger seat belt reminder indicator is enabled to the RCM.
Passenger Seat Belt Reminder Indicator Learn Status	Learned/Not Learned	The scan tool displays Learned or Not Learned. Learned is displayed if the passenger seat belt reminder indicator has been learned by the RCM.
Passenger Seat Belt Reminder Sensor Pad Enable Status	Disabled/Enabled	The scan tool displays if the passenger seat belt reminder sensor pad is enabled to the RCM.
Passenger Seat Belt Reminder Sensor Pad Learn Status	Learned/Not Learned	The scan tool displays Learned or Not Learned. Learned is displayed if the passenger seat belt reminder sensor pad has been learned by the RCM.
Passenger Seat Belt Sensor Enable Status	Enabled/Disabled	The scan tool displays if the seat position sensor is enabled to the RCM.
Passenger Seat Belt Sensor Learn Status	Learned/Not learned	The scan tool displays Learned or Not Learned. Learned is displayed if the passenger seat belt sensor has been learned by the RCM.
Passenger Seat Belt Status	Buckled/Unbuckled	The scan tool displays Buckled or Unbuckled. This is the state of the passenger seat belt switch when the seat belt is buckled or unbuckled.
Passenger Seat Occupancy Status	Empty Seat/Occupied	The scan tool displays Occupied if someone is sitting in the passenger seat.
Passenger Seat Position Sensor	Rearward/Forward	The scan tool will display if the passenger seat is forward or rearward of the sensor set position.
Passenger Seat Position Sensor Enable Status	Disabled/Enabled	The scan tool displays if the passenger seat position sensor pad is enabled to the RCM.
Passenger Seat Position Sensor Learn Status	Learned/Not Learned	The scan tool displays Learned or Not Learned. Learned is displayed if the passenger seat position sensor has been learned by the RCM.
Power Mode	Off/Accessory/Run/Crank Request	The scan tool will display the power mode of the vehicle.
Primary Key Status	Valid/Invalid	The scan tool displays Valid if the primary key matches what is stored to memory in the RCM.
Primary Key Status Last Ignition Cycle	Invalid/Valid	The RCM checks to see if the primary key data received is valid.
Received Primary Key	Hex Value	The scan tool displays a Hex value indicating the RCM received primary key data.
Rollover Sensor Enable Status	Disabled/Enabled	The scan tool displays if the rollover sensor is enabled to the RCM.
Rollover Sensor Learn Status	Learn/Unlearn	The scan tool displays Learned or Not Learned. Learned is displayed if the rollover sensor has been learned by the RCM.
Security Code Accepted	Yes/No	The RCM either accepts the security code or it does not. The scan tool displays Yes if the security code has been accepted by the RCM.
Security Code Lockout	Yes/No	The scan tool displays Yes if the RCM has been locked out because of the security code not being accepted.
Security Code Lockout Active Timer	Random Value	The RCM uses a timer before the security code is locked in the RCM.
Security Code Programmed	Yes/No	The scan tool displays Yes if the RCM has been programmed with the security code.
Security Code Programming Counter	Random Value	The RCM uses a counter for the value of the security code programming.
Security Code Reset Counter	Random Value	The RCM uses a counter to reset the value of the security code.

Parameter	Expected Value	Definition
Software Part Number	Varies, 8 Digit Number	The scan tool displays the software part number in the RCM.
Vehicle Identification Number	Varies, 17 Digit Number	The VIN number of the vehicle programmed into the RCM.
VIN Programmed	Yes/No	The scan tool displays Yes if the VIN has been programmed into the RCM.
VIN Programming Counter	Random Value	The RCM uses this counter while programming the VIN.

K38 Chassis Control Module: Scan Tool Information

Chassis Control Module (CCM) Scan Tool Data Parameters for Fuel System

Parameter	System State	Expected Value	Description
Operating Conditions: Ignition ON/Engine Idling at Normal Operating Temperature/Vehicle is in Park or Neutral			
Desired Fuel Pressure	—	306.8 kPa (44.5 psi)	This displays kPa (psi). This is the desired fuel pressure.
Fuel Pump Command	—	On	The scan tool displays On or Off. This is the current state of the fuel pump command.
Fuel Pump Signal Command	—	Varies	This displays %. This is the commanded fuel pump signal measured in percentage.
Fuel Pressure Sensor	—	296.4–310.3 kPa (43–45 psi)	This displays kPa (psi). This is the current pressure at the fuel pressure sensor.
Fuel Pressure Sensor	—	2.00–3.00 Volts	This voltage can vary depending on the engine application, engine load, operating conditions and other factors. This display is in Volts. This is the fuel pressure sensor voltage.
Ignition 1 Signal	—	Varies	This displays Volts. This is the current ignition 1 signal.
LT Fuel Pump Trim	—	Varies	This displays a numeric value. This is the long term (LT) fuel pump trim.
ST Fuel Pump Trim	—	Varies	This displays a numeric value. This is the short term (ST) fuel pump trim.

Chassis Control Module (CCM) Scan Tool Output Controls for Fuel System

Output Control	Description
Fuel Pressure Control	This output control is used to control the fuel pressure.
Fuel Pump	This output control is used to command the fuel pump ON and OFF.
Fuel Pump Trim Reset	This output control is used to reset the fuel pump trim.

CCM Scan Tool Parameters for Active Grille Air Shutters (If Equipped)

Parameter	System State	Expected Value	Description
Operating Conditions: Ignition ON/Engine Idling at Normal Operating Temperature / Vehicle is in Park or Neutral			
Active Grille Air Shutter Position Command (Single Shutter System)	—	Varies	This displays %. This is the commanded active grille air shutter position.

Parameter	System State	Expected Value	Description
Active Grille Air Shutter Position (Single Shutter System)	—	Varies	This displays %. This is the actual active grille air shutter position.
Active Grille Air Shutter 1 Position Command (Dual Shutter System)	—	Varies	This displays %. This is the commanded active grille air shutter position.
Active Grille Air Shutter 1 Position (Dual Shutter System)	—	Varies	This displays %. This is the actual active grille air shutter position.
Active Grille Air Shutter 2 Position Command (Dual Shutter System)	—	Varies	This displays %. This is the commanded active grille air shutter position.
Active Grille Air Shutter 2 Position (Dual Shutter System)	—	Varies	This displays %. This is the actual active grille air shutter position.

CCM Scan Tool Output Controls for Active Grille Air Shutters (If Equipped)

Output Control	Description
Active Grille Air Shutter System (Single Shutter System)	This output control is used to perform the Active Grille Air Shutter Actuator test. It is used to cycle the active grille air shutter open and closed. The test result will display pass or fail based on the ability of the louvers to cycle open and closed.
Active Grille Air Shutter 1 (Dual Shutter System)	This output control is used to perform the Active Grille Air Shutter Actuator test. It is used to cycle the active grille air shutter open and closed. The test result will display pass or fail based on the ability of the louvers to cycle open and closed.
Active Grille Air Shutter 2 (Dual Shutter System)	This output control is used to perform the Active Grille Air Shutter Actuator test. It is used to cycle the active grille air shutter open and closed. The test result will display pass or fail based on the ability of the louvers to cycle open and closed.

CCM Scan Tool Parameters for Active Engine Mounts (If Equipped)

Parameter	System State	Expected Value	Description
Operating Conditions: Ignition ON/Engine Idling at Normal Operating Temperature / Vehicle is in Park or Neutral			
Engine Mount Actuator Output 1	—	On/Off	The scan tool will display On/Off. This is the engine mount actuator commanded state.
Engine Mount Actuator Output 2	—	On/Off	The scan tool will display On/Off. This is the engine mount actuator commanded state.
Engine Mount Actuator Control Circuit 1 Status (2014 model year only)	—	Passed	The scan tool displays Passed/Short to Battery/Short to Ground/Open This is the engine mount actuator control circuit 1 condition.
Engine Mount Actuator Control Circuit 2 Status (2014 model year only)	—	Passed	The scan tool displays Passed/Short to Battery/Short to Ground/Open This is the engine mount actuator control circuit 2 condition.

CCM Scan Tool Output Controls for Active Engine Mounts (If Equipped)

Output Control	Description
Engine Mount Actuator Output 1	This output control is used to turn the engine mount actuator 1 On and Off.
Engine Mount Actuator Output 2	This output control is used to turn the engine mount actuator 2 On and Off.

CCM Scan Tool Parameters for Exhaust Flow Control Valves (If Equipped)

Parameter	System State	Expected Value	Description
Operating Conditions: Ignition ON/Engine Idling at Normal Operating Temperature / Vehicle is in Park or Neutral			
Exhaust Flow Control Valve Command	—	Open/Closed	Exhaust Flow Valve Commanded State
Exhaust Flow Control Valve Command	—	%	Exhaust Flow Valve Commanded Duty Cycle (0%-100%)
Exhaust Flow Control Valve Performance Mode	—	Active/Inactive	Exhaust Flow Valve Control Status
Exhaust Flow Control Valve Rumble Mode	—	Active/Inactive	Exhaust Flow Valve Control Status
Exhaust Flow Control Valve	—	Active/Inactive	Exhaust Flow Valve Control Status
Cylinder Deactivation Exhaust Flow Valve Command	—	Open/Closed/Disabled	Exhaust Flow Valve Commanded State
Cylinder Deactivation Exhaust Flow Control Valve	—	Active/Inactive	Exhaust Flow Valve Control Status
Cylinder Deactivation Exhaust Flow Control Valve 1 Position	—	Open range is 4 - 28 degrees Closed range is 64 - 93 degrees	Cylinder Deactivation Exhaust Flow Control Valve 1 actual position in degrees
Cylinder Deactivation Exhaust Flow Control Valve 2 Position	—	Open range is 4 - 28 degrees Closed range is 64 - 93 degrees	Cylinder Deactivation Exhaust Flow Control Valve 2 actual position in degrees

CCM Scan Tool Output Controls for Exhaust Flow Control Actuators (If Equipped)

Output Control	Description
Exhaust Flow Control Valve Command	This output control is used to cycle the exhaust flow control valve open and closed.
Cylinder Deactivation Exhaust Flow Valve Command	This output control is used to cycle the cylinder deactivation exhaust flow control valve open and closed.

CCM Scan Tool Parameters for Trailer Brake Control System (If Equipped)

Parameter	System State	Expected Value	Description
Operating Conditions: Ignition ON/Engine Idling at Normal Operating Temperature / Vehicle is in Park or Neutral			
ABS Active Signal	—	OK	The scan tool displays Ok/Not Ok. The scan tool displays Ok when no problems are found with the ABS Active Signal serial data message from the electronic brake control module to the chassis control module.
Antilock Braking System	—	Inactive	The scan tool displays Active/ Inactive. The scan tool displays Inactive when the ABS system is not functioning.
Automatic Brake Control Gain Request From EBCM	—	0–100%	The scan tool displays a number between 0–100%.
Automatic Brake Request From EBCM	—	No	The scan tool displays Yes/No. This is a request from the EBCM to apply the trailer brakes.

Parameter	System State	Expected Value	Description
Automatic-Brake Torque	—	Nm	The scan tool displays a numerical value.
Automatic-Brake Torque Signal	—	Ok	The scan tool displays Ok/Not Ok. The scan tool displays Ok when no problems are found with the Automatic Brake Torque Signal serial data message to the chassis control module.
Automatic Braking Active Signal	—	Ok	The scan tool displays Ok/Not OK. The scan tool displays OK when no problems are found with the Automatic Braking Active Signal serial data message to the chassis control module.
Automatic Braking Event	—	Not Detected	The scan tool displays Detected/Not Detected. This parameter represents a command to apply the trailer brakes from the adaptive cruise control system.
Brake Master Cylinder Pressure Sensor	—	Varies	The scan tool will display brake fluid pressure in the master cylinder. The scan tool will display a kPa or psi signal received from the chassis control module.
Brake Pressure Signal	—	OK	The scan tool will display Ok/Not Ok. The scan tool will display a serial data message received from the chassis control module.
Brake Request from EBCM	—	Ok	The scan tool displays Ok/Not Ok. The scan tool displays Ok when no problems are found with the Brake Request signal serial data message from the electronic brake control module to the chassis control module.
Desired Trailer Brake Control Duty Cycle	—	0–100%	The scan tool displays a number between 0–100%. This number represents a duty cycle request signal from the chassis control module to the trailer brake power module.
Deviation Between Manual Trailer Brake Apply Request Signal 1 and 2	—	Varies	The scan tools displays a percentage difference between the Apply Request Signal 2 and Redundant Request Signal 1.
Driver Initiated Brake Event	—	Not Detected	The scan tool displays Detected/Not Detected. The scan tool detects when the driver has applied the trailer brakes.
Induced Voltage by Trailer Brake Coil	—	0–20 V	The scan tool displays a voltage. This number represents the actual voltage supplied by the trailer brake power module to the trailer brakes.

Parameter	System State	Expected Value	Description
Manual Trailer Brake Apply Request Signal 1	—	Varies	The scan tool displays a percentage. This represents a brake apply signal between the chassis control module and the trailer brake power module.
Manual Trailer Brake Apply Request Signal 2	—	Varies	The scan tool displays a percentage. This represents a brake apply signal between the chassis control module and the trailer brake power module.
Stop Lamp Signal	—	Not Requested	The scan tool displays Requested/Not Requested. This is the brake pedal position sensor signal from the BCM to the chassis control module.
Trailer Brake Automatic Control State	—	Normal	The scan tool displays Normal/Active/Temporarily Inhibited/Temporarily Limited/ Permanently Failed/ Communication Failed/ Disabled by Calibration. This represents the operational state of the chassis control module.
Trailer Brake Control Duty Cycle	—	0–100%	The scan tool displays a percentage. This is the pulse width modulated output signal from the trailer brake power module to the trailer brakes.
Trailer Brake Control Output Circuit	—	Okay	The scan tool displays Unknown/Short to Battery/ Short to Ground/Okay. This represents the state of health of the output circuit from the trailer brake power module to the trailer brakes.
Trailer Brake Control Output Circuit	—	0–20 V	The scan tool displays a voltage. This represents the voltage supplied by the trailer brake power module to the trailer brakes.
Trailer Brake Power Control Module	—	De-Energized	The scan tool displays Energized/De-Energized. This represents the state of the trailer brake power module.
Trailer Brake Power Control Module Battery Voltage	—	Varies	The scan tool displays a voltage. This represents the battery voltage supplied to the trailer brake power module.
Trailer Brake Type	—	Undefined	The scan tool displays Undefined when a trailer is not connected to the vehicle. The scan tool displays Electromagnetic Brakes or Electrohydraulic Brakes when a trailer is connected to the vehicle. The type displayed is based on what is detected by the chassis control module.

Parameter	System State	Expected Value	Description
Trailer Brake User Gain	—	Varies	The scan tool displays percent of full gain setting. The scan tool displays 0–100%. Each full gain setting represents an increment of approximately 10 percent of full gain setting. Approximately 40% will be indicated with a gain setting of 4.0, 65% will be indicated with a gain setting of 6.5, etc.
Trailer Brake User Gain Switch	—	Varies	The scan tool displays percent of full gain setting. The scan tool displays 0–100%. Each full gain setting represents an increment of approximately 10 percent of full gain setting. Approximately 40% will be indicated with a gain setting of 4.0, 65% will be indicated with a gain setting of 6.5, etc.
Vehicle Speed	—	Varies	The scan tool displays 0–327 km/h (0–204 mph). The scan tool displays 0 km/h (0 mph) when the vehicle is not moving. This is the vehicle speed serial data message from the ECM.
Vehicle Stability Enhancement System Signal	—	Ok	The scan tool displays Ok/Not Ok. The scan tool displays Ok when no problems are found with the Vehicle Stability Enhancement System signal to the chassis control module.
Wheel Speed Signal	—	Ok	The scan tool displays Ok/Not Ok. The scan tool displays Ok when no problems are found with the Wheel Speed signal from the EBCM to the chassis control module.

Chassis Control Module (CCM) Scan Tool Output Controls for Trailer Brake Control System (If Equipped)

Output Control	Description
Trailer Brake Control Signal	This output control is used to turn the trailer brake power control module on and off.
Trailer Brake Duty Cycle	This output control is used to control the trailer brake apply signal from trailer brake power control module.

CCM Scan Tool Parameters for Vehicle Level Control (If Equipped)

Parameter	System State	Expected Value	Description
Operating Conditions: Ignition ON			
Left Rear Vehicle Level Position Sensor	—	.25–4.75 Volts	This displays Volts. This is the level position sensor voltage.
Right Rear Vehicle Level Position Sensor	—	.25–4.75 Volts	This displays Volts. This is the level position sensor voltage.
Vehicle Level Control Compressor Over Temperature	—	No	This displays Yes or No. This will display Yes if the compressor is overheated.

Parameter	System State	Expected Value	Description
Excessive Compressor Activity	—	No	This displays Yes or No. This will display Yes if the compressor activity is excessive.
Vehicle Level Control Status	—	Normal	This displays Normal/Uneven Surface or Hoisted/ Overloaded/Failed.
Vehicle Level Control Compressor	—	Varies	This displays On or Off. This will display if the compressor is on or off.
Vehicle Level Control Exhaust Valve	—	Varies	This displays Open or Closed. This will display if the exhaust valve is open or closed.
Vehicle Level Control Pressure Sensor	—	.4–4.8 Volts	This displays Volts. This is the level control pressure sensor voltage.
Vehicle Leveling Sensors Supply Voltage	—	4.9–5.1 Volts	This displays Volts. This is the leveling sensors supply voltage.
Vehicle Level Control Pressure Sensor Supply Voltage	—	4.9–5.1 Volts	This displays Volts. This is the level control pressure sensor supply voltage.
Vehicle Level Trim Height Status	—	Learned/Not Learned	This displays if the level trim height status

CCM Scan Tool Output Controls for Vehicle Level Control (If Equipped)

Output Control	Description
Suspension Position Sensor Trim Height	This output control is used to learn the trim height.
Vehicle Level Control Compressor Relay	This output control is used to command the compressor ON and OFF.
Vehicle Level Control Exhaust Valve	This output control is used to command the exhaust valve ON and OFF.

CCM Scan Tool Parameters for Transmission Cooling Fan (If Equipped)

Parameter	System State	Expected Value	Description
Operating Conditions: Ignition ON/Engine Idling at Normal Operating Temperature / Vehicle is in Park or Neutral			
Transmission Cooling Fan Circuit High Voltage Test Status	—	OK	Malfunction/Not Run/OK
Transmission Cooling Fan Circuit Open Test Status	—	OK	Malfunction/Not Run/OK
Transmission Cooling Fan Circuit Low Voltage Status	—	OK	Malfunction/Not Run/OK
Transmission Cooling Fan Command	—	Yes/No	The scan tool displays Yes/No. This shows if the transmission cooling fan is being commanded ON.
Transmission Cooling Fan Duty Cycle	—	0 – 100%	The scan tool displays a percentage. This is the transmission cooling fan ON duty cycle.

CCM Scan Tool Output Controls for Transmission Cooling Fan (If Equipped)

Output Control	Description
Transmission Cooling Fan Duty Cycle	This output control is used to control the transmission cooling fan.

K40D Driver Seat Adjuster Memory Module: Scan Tool Information

Seat Position Scan Tool Data Parameters

Parameter	Expected Value	Definition
Operating Conditions: Ignition ON		
Driver Seat Back Switch	Inactive	The scan tool displays Inactive, Forward, or Rearward. When the seat recline switch is pressed, the scan tool displays the direction for which the switch is pressed.
Driver Seat Back Direction Command	Inactive	The scan tool displays Inactive, Forward, or Rearward. When the seat recline switch is pressed or when a memory recall occurs, the scan tool displays the direction the memory control module is commanding the seat recline motor.
Driver Seat Back Position	Varies	The scan tool displays 0–65,535 counts. The module counts the number of pulse signals with each rotation of the motor that the scan tool displays as counts. High count values indicate that the seat back is in the forward position, while low count values indicate that the seat back is in the rearward position.
Driver Seat Cushion Front Vertical Direction Command	Inactive	The scan tool displays Inactive, Up or Down. When the seat front vertical switch is pressed or when a memory recall occurs, the scan tool displays the direction the memory control module is commanding the seat front vertical motor.
Driver Seat Cushion Front Vertical Position	Varies	The scan tool displays 0–65,535 counts. The module counts the number of pulse signals with each rotation of the motor that the scan tool displays as counts. High count values indicate that the seat front vertical is in the up position, while low count values indicate that the seat front vertical is in the down position.
Driver Seat Cushion Front Vertical Switch	Inactive	The scan tool displays Inactive, Up or Down. When the seat front vertical switch is pressed, the scan tool should display the direction for which the switch is pressed.
Driver Seat Cushion Rear Vertical Direction Command	Inactive	The scan tool displays Inactive, Up or Down. When the seat rear vertical switch is pressed or when a memory recall occurs, the scan tool displays the direction the memory control module is commanding the seat rear vertical motor.
Driver Seat Cushion Rear Vertical Position	Varies	The scan tool displays 0–65,535 counts. The module counts the number of pulse signals with each rotation of the motor that the scan tool displays as counts. High count values indicate that the seat rear vertical is in the up position, while low count values indicate that the seat rear vertical is in the down position.
Driver Seat Cushion Rear Vertical Switch	Inactive	The scan tool displays Inactive, Up or Down. When the seat rear vertical switch is pressed, the scan tool should display the direction for which the switch is pressed.
Driver Seat Horizontal Direction Command	Inactive	The scan tool displays Inactive, Forward, or Rearward. When the seat horizontal switch is pressed or when a memory recall occurs, the scan tool displays the direction the memory control module is commanding the seat horizontal motor.
Driver Seat Horizontal Position	Varies	The scan tool displays 0–65,535 counts. The module counts the number of pulse signals with each rotation of the motor that the scan tool displays as counts. High count values indicate that the seat horizontal position is forward, while low count values indicate that the seat horizontal position is rearward.
Driver Seat Horizontal Switch	Inactive	The scan tool displays Inactive, Forward, or Rearward. When the seat horizontal switch is pressed, the scan tool should display the direction for which the switch is pressed.

Parameter	Expected Value	Definition
Driver Seat Lumbar Support Horizontal Switch	Inactive	The scan tool displays Inactive, Forward, or Rearward. When the seat lumbar horizontal switch is pressed, the scan tool should display the direction for which the switch is pressed.
Driver Seat Lumbar Support Horizontal Direction Command	Inactive	The scan tool displays Inactive, Forward, or Rearward. When the seat lumbar horizontal switch is pressed, the scan tool displays the direction the memory control module is commanding the seat lumbar horizontal motor.
Lumbar Support Horizontal Position	Varies	The module stores the pressure information for lumbar position.
Driver Seat Lumbar Support Vertical Switch	Inactive	The scan tool displays Inactive, Up, or Down. When the seat lumbar vertical switch is pressed, the scan tool should display the direction for which the switch is pressed.
Driver Seat Lumbar Support Vertical Direction Command	Inactive	The scan tool displays Inactive, Up, or Down. When the seat lumbar vertical switch is pressed, the scan tool displays the direction the memory control module is commanding the seat lumbar vertical motor.
Driver Seat Memory Recall Switches	Inactive	The scan tool displays Inactive, Memory 1, Memory 2, or Exit. When a memory function switch is pressed, the scan tool should momentarily display the function selected.
Driver Seat Memory Set Switch	Inactive	The scan tool displays Inactive/Active. When the memory SET switch is pressed, the scan tool should display Active.
Driver Seat Back Side Bolster Direction Command	Inactive	The scan tool displays Inactive, Inflate, or Deflate. When the seat back side bolster switch is pressed, the scan tool displays the function the memory control module is commanding the seat lumbar/bolster pump.
Driver Seat Back Side Bolster Switch	Inactive	The scan tool displays Inactive, Inflate, or Deflate. When the seat back side bolster switch is pressed, the scan tool should display the function for which the switch is pressed.
Driver Seat Cushion Side Bolster Direction Command	Inactive	The scan tool displays Inactive, Inflate, or Deflate. When the seat back side bolster switch is pressed, the scan tool displays the function the memory control module is commanding the seat lumbar/bolster pump.
Driver Seat Cushion Side Bolster Switch	Inactive	The scan tool displays Inactive, Inflate, or Deflate. When the seat back side bolster switch is pressed, the scan tool should display the function for which the switch is pressed.
Seat Massage Switch	Inactive	The scan tool displays Inactive/Active. When the seat massage switch s pressed, the scan tool should display Active.

Mirror Memory Scan Tool Data Parameters

Parameter	Expected Value	Definition
Operating Conditions: Ignition ON		
Mirror Select Switch	None	The scan tool displays None, Driver Door, or Passenger Door. The scan tool displays the current state of the mirror select switch.
Mirror Direction Switch	Inactive	The scan tool displays Inactive/Up/Down/Left/Right/Folding/ Extending. The scan tool displays the current state of the power mirror switch as pressed.
Driver Mirror Direction Command	Inactive	The scan tool displays Inactive/Up/Down/Left/Right. When the power mirror switch is being used or when a memory recall occurs, the scan tool displays the direction the memory control module is commanding the driver mirror motors.
Driver Mirror Vertical Position	Varies	The scan tool displays 0–5 V. The voltage displayed represents the position of the driver vertical motor. High voltage values indicate the mirror position is up, while low count values indicate the mirror position is down.

Parameter	Expected Value	Definition
Driver Mirror Horizontal Position	Varies	The scan tool displays 0–5 V. The voltage displayed represents the position of the driver horizontal motor. High voltage values indicate the mirror position is to the right or in, while low count values indicate the mirror position is to the left or out.
Passenger Mirror Direction Command	Inactive	The scan tool displays Inactive/Up/Down/Left/Right. When the power mirror switch is being used or when a memory recall occurs, the scan tool displays the direction the memory control module is commanding the passenger mirror motors.
Passenger Mirror Vertical Position	Varies	The scan tool displays 0–5 V. The voltage displayed represents the position of the passenger vertical motor. High voltage values indicate the mirror position is up, while low count values indicate the mirror position is down.
Passenger Mirror Horizontal Position	Varies	The scan tool displays 0–5 V. The voltage displayed represents the position of the passenger horizontal motor. High voltage values indicate the mirror position is to the right or in, while low count values indicate the mirror position is to the left or out.

Steering Column Scan Tool Data Parameters

Parameter	Expected Value	Definition
Operating Conditions: Ignition ON		
Steering Column Direction Switch	Varies	The scan tool displays Inactive, Forward, Rearward, Up, or Down. When the steering column switch is pressed, the scan tool should display the direction for which the switch is pressed.
Steering Column Direction Command	Varies	The scan tool displays Inactive, Forward, Rearward, Up, or Down. When the module is commanding movement of the column, the scan tool should display the direction the module is commanding the column to move in.
Steering Column Vertical Position	Varies	The scan tool displays 0–5 V. The voltage displayed is an input to the seat memory control module from the steering column vertical position sensor. Higher voltage readings indicates the steering wheel position is up while lower voltage readings indicate the steering wheel position is down.
Steering Column Horizontal Position	Off	The scan tool displays 0–5 V. The voltage displayed is an input to the seat memory control module from the steering column vertical position sensor. Higher voltage readings indicates the steering wheel position is forward toward the front of the vehicle or away from the driver while lower voltage readings indicate the steering wheel position is rearward toward the driver.

Seat Memory Scan Tool Control Functions

Control Functions	Description
Driver Seat Back Horizontal Movement	This output control is used to command the driver seat back recline position Forward and Rearward.
Driver Seat Cushion Front Vertical Movement	This output control is used to command the driver seat cushion front vertical position Up and Down.
Driver Seat Cushion Rear Vertical Movement	This output control is used to command the driver seat cushion rear vertical position Up and Down.
Driver Seat Horizontal Movement	This output control is used to command the driver seat horizontal position Forward and Rearward.
Driver Seat Back Side Bolster Movement	This output control is used to command the driver seat back side bolster support to Inflate or Deflate.

Control Functions	Description
Driver Seat Lumbar Support Horizontal Movement	This output control is used to command the driver seat lumbar horizontal position Forward and Rearward.
Driver Seat Lumbar Support Vertical Movement	This output control is used to command the lumbar vertical position Up and Down.

Mirror Memory Scan Tool Control Functions

Control Functions	Description
Driver Mirror Fold	This output control is used to command the driver mirror to fold and unfold.
Driver Mirror Movement	This output control is used to command the driver mirror up and down or left and right.
Passenger Mirror Fold	This output control is used to command the passenger mirror to fold and unfold.
Passenger Mirror Movement	This output control is used to command the passenger mirror up and down or left and right.

Adjustable Steering Column Scan Tool Control Functions

Control Functions	Description
Steering Column Tilt Up Command	This output control is used to command the steering column to the up position.
Steering Column Tilt Down Command	This output control is used to command the steering column to the down position.
Steering Column Telescope Forward Command	This output control is used to command the steering column to the forward position.
Steering Column Telescope Rearward Command	This output control is used to command the steering column to the rearward position.

Seat Cushion Haptic Motors Scan Tool Control Functions

Control Functions	Description
Driver Seat Cushion Left Rear Haptic Movement	This output control is used to Enable and Disable the driver seat cushion left rear haptic motor function.
Driver Seat Cushion Right Rear Haptic Movement	This output control is used to Enable and Disable the driver seat cushion right rear haptic motor function.

K40P Passenger Seat Adjuster Memory Module: Scan Tool Information

Seat Memory Control Module Scan Tool Data Display Parameters

Parameter	Expected Value	Definition
Operating Conditions: Ignition ON		
Passenger Seat Back Switch	Inactive	The scan tool displays Inactive, Forward, or Rearward. When the seat recline switch is pressed, the scan tool displays the direction for which the switch is pressed.
Passenger Seat Back Direction Command	Inactive	The scan tool displays Inactive, Forward, or Rearward. When the seat recline switch is pressed or when a memory recall occurs, the scan tool displays the direction the memory control module is commanding the seat recline motor.

Parameter	Expected Value	Definition
Passenger Seat Back Position	Varies	The scan tool displays 0–65,535 counts. The module counts the number of pulse signals with each rotation of the motor that the scan tool displays as counts. High count values indicate that the seat back is in the forward position, while low count values indicate that the seat back is in the rearward position.
Passenger Seat Cushion Front Vertical Direction Command	Inactive	The scan tool displays Inactive, Up or Down. When the seat front vertical switch is pressed or when a memory recall occurs, the scan tool displays the direction the memory control module is commanding the seat front vertical motor.
Passenger Seat Cushion Front Vertical Position	Varies	The scan tool displays 0–65,535 counts. The module counts the number of pulse signals with each rotation of the motor that the scan tool displays as counts. High count values indicate that the seat front vertical is in the up position, while low count values indicate that the seat front vertical is in the down position.
Passenger Seat Cushion Front Vertical Switch	Inactive	The scan tool displays Inactive, Up or Down. When the seat front vertical switch is pressed, the scan tool will display the direction for which the switch is pressed.
Passenger Seat Cushion Rear Vertical Direction Command	Inactive	The scan tool displays Inactive, Up or Down. When the seat rear vertical switch is pressed or when a memory recall occurs, the scan tool displays the direction the memory control module is commanding the seat rear vertical motor.
Passenger Seat Cushion Rear Vertical Position	Varies	The scan tool displays 0–65,535 counts. The module counts the number of pulse signals with each rotation of the motor that the scan tool displays as counts. High count values indicate that the seat rear vertical is in the up position, while low count values indicate that the seat rear vertical is in the down position.
Passenger Seat Cushion Rear Vertical Switch	Inactive	The scan tool displays Inactive, Up or Down. When the seat rear vertical switch is pressed, the scan tool will display the direction for which the switch is pressed.
Passenger Seat Horizontal Direction Command	Inactive	The scan tool displays Inactive, Forward, or Rearward. When the seat horizontal switch is pressed or when a memory recall occurs, the scan tool displays the direction the memory control module is commanding the seat horizontal motor.
Passenger Seat Horizontal Position	Varies	The scan tool displays 0–65,535 counts. The module counts the number of pulse signals with each rotation of the motor that the scan tool displays as counts. High count values indicate that the seat horizontal position is forward, while low count values indicate that the seat horizontal position is rearward.
Passenger Seat Horizontal Switch	Inactive	The scan tool displays Inactive, Forward, or Rearward. When the seat horizontal switch is pressed, the scan tool will display the direction for which the switch is pressed.
Passenger Seat Lumbar Support Horizontal Switch	Inactive	The scan tool displays Inactive, Forward, or Rearward. When the seat lumbar horizontal switch is pressed, the scan tool will display the direction for which the switch is pressed.
Passenger Seat Lumbar Support Horizontal Direction Command	Inactive	The scan tool displays Inactive, Forward, or Rearward. When the seat lumbar horizontal switch is pressed, the scan tool displays the direction the memory control module is commanding the seat lumbar horizontal motor.
Passenger Seat Lumbar Support Horizontal Position	Varies	
Passenger Seat Lumbar Support Vertical Switch	Inactive	The scan tool displays Inactive, Up, or Down. When the seat lumbar vertical switch is pressed, the scan tool will display the direction for which the switch is pressed.
Passenger Seat Lumbar Support Vertical Direction Command	Inactive	The scan tool displays Inactive, Up, or Down. When the seat lumbar vertical switch is pressed, the scan tool displays the direction the memory control module is commanding the seat lumbar vertical motor.
Passenger Seat Back Side Bolster Switch	Inactive	The scan tool displays Inactive, In, or Out. When the seat back side bolster switch is pressed, the scan tool will display the function for which the switch is pressed.

Parameter	Expected Value	Definition
Passenger Seat Back Side Bolster Direction	Inactive	The scan tool displays Inactive, In or Out. When the seat back side bolster switch is pressed, the scan tool displays the function the memory control module is commanding the seat lumbar/ bolster pump.
Seat Cushion Side Bolster Switch	Inactive	The scan tool displays Inactive, In, or Out. When the seat back side bolster switch is pressed, the scan tool will display the function for which the switch is pressed.
Seat Cushion Side Bolster Direction Command	Inactive	The scan tool displays Inactive, In or Out. When the seat back side bolster switch is pressed, the scan tool displays the function the memory control module is commanding the seat lumbar/ bolster pump.
Passenger Seat Memory Recall Switches	Inactive	The scan tool displays Inactive, Memory 1, Memory 2, or Exit. When a memory function switch is pressed, the scan tool should momentarily display the function selected.
Passenger Seat Memory Set Switch	Inactive	The scan tool displays Inactive/Active. When the memory SET switch is pressed, the scan tool should display Active.
Seat Massage Switch	Inactive	The scan tool displays Inactive/Active. When the massage switch is pressed, the scan tool should display Active.

Seat Memory Control Module Scan Tool Control Functions

Control Functions	Description
Seat Back Direction Command	This output control is used to command the seat back recline position Forward and Rearward.
Seat Back Side Bolster Direction Command	This output control is used to command the seat back side bolster position In or Out.
Seat Cushion Side Bolster Direction Command	This output control is used to command the seat cushion side bolster position In or Out.
Seat Cushion Front Vertical Direction Command	This output control is used to command the seat cushion front vertical position Up and Down.
Seat Cushion Rear Vertical Direction Command	This output control is used to command the seat cushion rear vertical position Up and Down.
Seat Horizontal Directional Command	This output control is used to command the seat horizontal position Forward and Rearward.
Lumbar Support Horizontal Direction Command	This output control is used to command the seat lumbar horizontal position Forward and Rearward.
Lumbar Support Vertical Direction Command	This output control is used to command the seat lumbar vertical position Up and Down.

K43 Power Steering Control Module: Scan Tool Information

Power Steering Control Module Scan Tool Data Parameters

Parameter	Expected Value	Description
Operating Conditions: Ignition ON		
Steering Wheel Input Torque	Varies	This displays the current steering input torque in N•m
Power Steering System Status	No Assist No Assist – Auto Stop Active Full Assist Limp Home Mode Limp Aside Mode	This displays the current status of the power steering system. When no faults are present, the status should be Full Assist.

Parameter	Expected Value	Description
Power Steering System Assist Status	Normal Maximum Assist - Level 1 Maximum Assist - Level 2 Minimum Assist - Level 1 Minimum Assist - Level 2	This displays the current performance mode of the power steering assist.
Advanced Parking Assist Status	Temporarily Inhibited Available Active Malfunction	This displays the current status of the advance parking assist system.
Power Steering Softstops Learn Status	Not Learned Learned	This displays whether the power steering rack softstops have been learned.
Battery Voltage	Varies	This displays Volts. This is the current battery voltage.
Ignition On Time	Varies	This displays seconds. This is the amount of time the current ignition cycle has been active.
Vehicle Speed	0 Km/h (0 MPH)	This displays km/h (mph). This is the current vehicle speed.
Electric Power Steering Motor Current Commanded	Varies	This displays amps (A). This displays the amount of current requested by the power steering assist motor.
Electric Power Steering Motor Current Feedback	Varies	This displays amps (A). This displays the Electric Power Steering Motor Current Feedback.
Calculated Steering Gear Rack Travel	Varies	This displays mm. This is the amount of rack travel in either direction from center.
Power Steering Output Torque	Varies	This displays N•m . This displays the current value of the Output Torque of the Electric Power Steering.
Calculated System Temperature	Varies	This displays ° C. This is the current system temperature.
Power Steering Level 1 Malfunction Ignition Cycle Counter	Varies	This displays counts. This is the number of ignition cycles performed while the vehicle is in a state of Power Steering Level 1 Malfunction.
Power Steering Motor Overload Protection Counter	Varies	This displays counts. This displays the Electric Power Steering Motor Overload Protection Incidents counter.
Ignition Cycle Counter	Varies	This displays counts. This number of ignition cycles performed.
Steering Wheel Angle Sensor Calibration Status	Unknown Estimated Calibrated	This displays the current calibration status of the steering wheel angle sensor.
Power Steering Assist Request from other Vehicle Device	Unknown Temporarily Inhibited Inactive Active Temporarily Limited Malfunction	Displays the current state of requests to the power steering control module for assist from other vehicle devices.
Power Steering Assist Inhibited - Motor Over Temperature	Yes/No	Indicates if the power steering assist motor is experiencing an over temperature condition and is reducing assist.

Parameter	Expected Value	Description
Power Steering Motor Assist Status	Normal Reduced Unavailable	This displays the current status of the power steering assist motor.
Power Steering Assist Mode	None Normal Sport Mode Comfort Track Mode Tow/Haul City Mode Performance	This displays the currently selected assist mode.
System Power Mode	Off Accessory Run Start Propulsion Active	This displays the current ignition power mode of the vehicle.
System Logistic Setting	Off Assembly Plant Mode Transport Mode Storage Mode	This displays the currently selected logistic setting of the vehicle system.

Power Steering Control Module Scan Tool Output Controls

Output Control	Description
Steering Wheel Angle Sensor Learn	Command to relearn the center position of the power steering system.
Power Steering Active Pull/Drift Compensation Learn	Clear active pull compensation learned limits. Command to reset the active pull compensation learned values.

K60 Column Lock Module: Scan Tool Information

Scan Tool Data Parameters

Parameter	Expected Value	Description
Operating Conditions: Ignition ON		
Column Lock Status	Locked Invalid Unlocked Unknown	The scan tool displays Failed, Unknown, Locked and Unlocked. The scan tool displays the current state of the column lock.
Turn Steering Wheel, Start Vehicle Again Display Message	Inactive Active	The scan tool displays Active/Inactive. If the wheels are against a curb, the lock pin may not be able to pull out. A message for the driver that is displayed on the Driver Information Center. The scan tool displays the need to turn the steering wheel, turn off the vehicle and then restart the vehicle.
Steering Column Lock Indicator	Inactive Active	The scan tool displays Active/Inactive. The scan tool displays the current state of the column lock.

K68 Trailer Lighting Control Module: Scan Tool Information

Body Control Module Scan Tool Data Parameters

Parameter	System State	Expected Value	Definition
Operating Conditions: Ignition ON, Vehicle in Park.			
Battery Voltage	—	Varies	The scan tool displays the current battery voltage.
Brake Pedal Switch Status	—	Active/Inactive	The scan tool displays the status of the brake pedal
State of Charge	—	Varies	The scan tool displays percentage. This parameter displays state of charge status.
System Voltage	—	Varies	The scan tool displays the current system voltage.
Trailer Connection Status	—	Connected/Not Connected	The scan tool displays the trailer connected status.

Body Control Module Scan Tool Output Controls

Scan Tool Output Control	Description
Left Trailer Turn Signal/ Stop Lamp Command	The Trailer Lighting Control Module activates the left trailer turn signal/stop lamp control circuit when you select Active. B+ should be applied to terminal G at the X88 Trailer Connector.
Right Trailer Turn Signal/ Stop Lamp Command	The Trailer Lighting Control Module activates the right trailer turn signal/stop lamp control circuit when you select Active. B+ should be applied to terminal D at the X88 Trailer Connector.
Left Trailer Tail Lamp	The Trailer Lighting Control Module activates the trailer park lamp control circuit when you select Active. B+ should be applied to terminal F at the X88 Trailer Connector.
Right Trailer Tail Lamp	The Trailer Lighting Control Module activates the trailer park lamp control circuit when you select Active. B+ should be applied to terminal F at the X88 Trailer Connector.
Trailer Backup Lamps	The Trailer Lighting Control Module activates the trailer backup lamp control circuit when you select Active. B+ should be applied to terminal A at the X88 Trailer Connector.

K69 Transfer Case Control Module: Scan Tool Information

Scan Tool Data Parameters

Parameter	Expected Value	Expected Value	Description
Operating Conditions: Ignition ON, engine OFF, Park or Neutral, and transfer case in 2WD, unless otherwise noted.			
Engine Speed	RPM	Varies	This parameter displays engine RPM.
Warm-Ups Since Diagnostic Trouble Code Cleared	Counts	Varies	This parameter displays the number of warm-ups since DTC cleared.
Control Module Voltage Signal	0.0 to 25.5 V	Battery Voltage	This parameter displays the voltage measured by the transfer case control module at the battery positive voltage circuit.
Ignition Cycles without Completed Test Since First Malfunction	Counts	Varies	This parameter displays the number of ignition cycles without a pass or a failure reported.
Engine Torque in Steady State	Nm	Varies	This parameter displays the engine actual steady state torque as received via CAN.
Steering Wheel Angle	Steering wheel in straight position	−5 to +5°	The scan tool displays °. This is the current position of the steering angle sensor.
	Steering wheel turned left until stop	450–550°	
	Steering wheel turned right until stop	−550 to −450°	

Parameter	Expected Value	Expected Value	Description
4WD Automatic Range Indicator Command	ON or OFF	OFF	This parameter displays ON when the transfer case control module commands the Auto 4WD indicator ON.
Electric Park Brake Not Available	Not Available, Available, Failed	Available	This parameter displays the EPB status based on CAN message.
Odometer	M or Km	Varies	This parameter displays the vehicle mileage.
Propulsion System Status	Not Active, Active	Active	This parameter displays the propulsion system state as received via CAN.
Service 4WD Indicator Command	ON or OFF	OFF	This parameter displays ON anytime a DTC sets.
All Wheel Drive	Normal, Temporarily Inhibited, Temporarily Limited, Failed	Normal	This parameter displays the status of the transfer case system.
AWD Off Indicator Request	Requested, Not Requested	Not Requested	This parameter displays ON anytime the AWD OFF DIC message displays.
AWD Input-Output Circuit Status	OK, Failed	OK	This parameter displays the status of the AWD system.
Transfer Case Clutch Torque	Nm	0.0	This parameter displays the estimated torque being held by the transfer case clutch.
Transfer Case Thermal Capacity Used	%	Varies	This parameter displays the estimated clutch capacity used.
Transfer Case Drive Mode	Two Wheel Drive High Active, Four Wheel Drive High Lock Active, Four Wheel Drive Low Active, All Wheel Drive Connected Active, Four Wheel Drive High Auto Active, Four Wheel Drive Low Active, All Wheel Drive Connected Active, Two Wheel Drive Low Active, Position Unknown, Transfer Case Neutral Active	Varies	This parameter displays the current mode of the 4WD system based on the secondary axle.
Calculated Transfer Case Clutch Temperature	°C/°F	Varies	This parameter displays the estimated clutch temperature.
Transfer Case Fluid Temperature	°C/°F	Varies	This parameter displays the estimated transfer case fluid temperature.
Transfer Case Clutch Engagement	%	Varies	This parameter displays the transfer case clutch torque level in percentage of clutch capacity.
Requested Transfer Case Clutch Torque	Nm	Varies	This parameter displays the commanded torque to be held by the transfer case clutch.
Transfer Case Clutch Overtemperature Counter	Counts	Varies	This parameter displays the count of clutch over temperature events.

Parameter	Expected Value	Expected Value	Description
Clutch Overtemperature Counter Reset Request Allowed	No, Yes	Yes	This parameter displays status of over temperature counter reset.
Transfer Case Clutch Learn Status	Not Learned, Passed, Failed, Aborted, In Progress, Reserved	Passed	This parameter displays the status of the last transfer case clutch learn.
Vehicle Stability Control Request	%	Varies	Vehicle stability enhancement system coupling request value
AWD Front and Rear Wheel Speed Differential	RPM	Varies	This parameter displays the speed difference between the front and rear wheels.
Lateral Acceleration	G's	Varies	This parameter displays the vehicles lateral acceleration..
Yaw Rate	degree/sec	Varies	This parameter displays the vehicles yaw.
Secondary Axle Locking Torque Coupling Request	Not Requested, Maximum Torque, Minimum Torque, Actual Torque	Varies	This parameter displays the secondary axle locking torque requested by CAN message.
Range Actuator Lock Command	Disengaged or Engaged	Disengaged	This parameter displays the commanded status of the range actuator lock. The lock will be engaged in Auto 4WD, 4WD High, or 4WD Low, and Disengaged in 2WD High and Neutral.
Range Actuator Motor Current - Shunt Circuit 1	Amps	Varies	This parameter displays the measured current of the Transfer Case Range Actuator on Shunt 1.
Range Actuator Motor Current - Shunt Circuit 2	Amps	Varies	This parameter displays the measured current of the Transfer Case Range Actuator on Shunt 2.
Message Authentication Key Configuration State	Not Needed, Needed	Varies	This parameter is an indication to service tool that key provisioning is necessary.
Power Mode	OFF, Accessory, Run or Crank Request	Run	This parameter displays the status of the ignition switch.
Left Front Wheel Speed	Varies	0 km/h (0 MPH)	The scan tool displays km/h (MPH) depending on the current speed of the left front wheel speed sensor.
Left Rear Wheel Speed	Varies	0 km/h (0 MPH)	The scan tool displays km/h (MPH) depending on the current speed of the left rear wheel speed sensor.
Right Front Wheel Speed	Varies	0 km/h (0 MPH)	The scan tool displays km/h (MPH) depending on the current speed of the right front wheel speed sensor.
Right Rear Wheel Speed	Varies	0 km/h (0 MPH)	The scan tool displays km/h (MPH) depending on the current speed of the right rear wheel speed sensor.
Transfer Case Range Position Sensor and Transfer Case Incremental Position Sensor Variance Allowed	°	Varies	This parameter displays the allowed variation between transfer case range position sensor and the range actuator position sensor.
Transfer Case Range Position Sensor and Transfer Case Incremental Position Sensor Variance	°	Varies	This parameter displays the actual variation between transfer case range position sensor and the range actuator position sensor.
Front Axle Engagement Actuator Command	Engaged or Disengaged	Disengaged	This parameter displays either Engaged or Disengaged. Engaged when the body control module is commanding Auto 4WD, 4WD, or 4WD Low ranges, and Disengaged when the body control module is commanding Neutral, or 2WD ranges.

Parameter	Expected Value	Expected Value	Description
Front Axle Engagement Actuator Control Circuit High Voltage Test Status	Not Run, OK or Malfunction	OK	This parameter monitors the status of the front axle engagement actuator control circuit. A short to battery on the front axle engagement actuator control circuit will cause this parameter to display Malfunction.
Front Axle Engagement Actuator Control Circuit Low Voltage Test Status	Not Run, OK or Malfunction	OK	This parameter monitors the status of the front axle engagement actuator control circuit. A short to ground on the front axle engagement actuator control circuit will cause this parameter to display Malfunction.
Front Axle Engagement Actuator Control Circuit Open Test Status	Not Run, OK or Malfunction	OK	This parameter monitors the status of the front axle engagement actuator control circuit. An open/high resistance condition on the front axle engagement actuator control circuit will cause this parameter to display Malfunction.
Front Axle Actuator Status	Engaged or Disengaged	Disengaged	This parameter displays the actual status of the front axle. The parameter will display Engaged when the system is in Auto 4WD, 4WD, or 4WD Low modes, and Disengaged when the system is in Neutral, or 2WD High or Neutral mode.
Range Actuator Control Circuit High Voltage Test Status	Not Run, OK or Malfunction	OK	This parameter monitors the status of the range actuator control circuit. The range actuator control circuit is made up of the range actuator control circuit A and the range actuator control circuit B. A short to battery on the range actuator control circuit A or the range actuator control circuit B will cause this parameter to display Malfunction.
Range Actuator Control Circuit Low Voltage Test Status	Not Run, OK or Malfunction	OK	This parameter monitors the status of the range actuator control circuit. The range actuator control circuit is made up of the range actuator control circuit A and the range actuator control circuit B. A short to ground on the range actuator control circuit A or the range actuator control circuit B will cause this parameter to display Malfunction.
Range Actuator Control Circuit Open Test Status	Not Run, OK or Malfunction	OK	This parameter monitors the status of the range actuator control circuit. The range actuator control circuit is made up of the range actuator control circuit A and the range actuator control circuit B. An open on the range actuator control circuit A or the range actuator control circuit B will cause this parameter to display Malfunction.
Range Actuator Control Circuit Shorted Test Status	Not Run, OK or Malfunction	OK	This parameter monitors the status of the range actuator control circuit. The range actuator control circuit is made up of the range actuator control circuit A and the range actuator control circuit B. A short to ground, short to battery or short together on the range actuator control circuit A and/or the range actuator control circuit B will cause this parameter to display Malfunction.
Range Actuator Current	−15.0 to +36.0 A	0.0 A	This parameter displays the current drawn by the range actuator from the transfer case control module on either the range actuator control circuit A or the range actuator control circuit B. Typical values display 0.0 to 12.0 A. This parameter will display 0.0 A after shifting ranges.
Range Actuator Direction Command	Invalid, Stationary, Clockwise or Counter-clockwise	Stationary	This parameter displays what direction the transfer case control module is commanding the range actuator to turn. This parameter will display Stationary after a range change.
Transfer Case Range - Range Position Sensor	2WD, 4WD High–2WD 4WD High/ Locked, 4WD High–Neutral, Neutral, Neutral–4WD Low, or 4WD Low	2WD	This parameter displays the actual position of the transfer case according to the range actuator position sensor.

Parameter	Expected Value	Expected Value	Description
Transfer Case Range - Incremental Position Sensor	2WD, 4WD High–2WD 4WD High/ Locked, 4WD High–Neutral, Neutral, Neutral–4WD Low, or 4WD Low	2WD	This parameter displays the actual position of the transfer case according to the incremental position sensor.
Transfer Case Position - Range Position Sensor	–125 to 120°	6°	This parameter displays the position of the range actuator position sensor in degrees. Typical scan tool displays: • 2WD High = 6° • 4WD Auto = 89° • 4WD High = 117° • 4WD Low = −123° • Neutral = −32°
Transfer Case Commanded Position	–65 to 0°	0°	This parameter displays the commanded position of the transfer case in degrees. Typical scan tool displays: • 2WD High = 0° • 4WD Auto = 0° • 4WD High = 0° • 4WD Low = −65° • Neutral = −20°
Transfer Case Commanded Position	2WD, 4WD High/Locked, 4WD Low, Neutral or None	2WD	This parameter displays the current range commanded by the driver.
Transfer Case Range Selection Switch State	Invalid, Neutral, 2WD, 4WD/AWD Automatic, 4WD High/ Locked, 4WD Low, 4WD Unlocked	2WD	This parameter displays the current mode the transfer case is in, as indicated by the transfer case range position switch.
Range Actuator Lock Command Status	Disengage, Engage, Failed	Engage	This parameter displays the range actuator brake status.
Range Actuator Brake Control Circuit Current	Amps	Varies	This parameter displays the current for the transfer case range actuator brake.
Range Actuator Brake Control Circuit Low Side Voltage	Volts	Varies	This parameter displays the diagnostic voltage for the transfer case range actuator brake.
Range Actuator Brake Control Circuit High Side Voltage	Volts	Varies	This parameter displays the diagnostic voltage for the transfer case range actuator brake.
Range Actuator Lock Command Status	Unlocked, Locked	Locked	This parameter displays the command status of the range actuator brake.
Range Actuator Lock Control Circuit Low Voltage Test Status	Failed, Indeterminate, Passed	Passed	This parameter displays the status of the range actuator brake test.
Range Actuator Lock Control Circuit Open Test Status	Failed, Indeterminate, Passed	Passed	This parameter displays the status of the range actuator brake test.

Parameter	Expected Value	Expected Value	Description
Range Actuator Lock Control Circuit High Voltage Test Status	Failed, Indeterminate, Passed	Passed	This parameter displays the status of the range actuator brake test.
Transfer Case Clutch Learn Counter	Counts	Varies	This parameter displays the number of times the transfer case clutch learn has been completed.

Scan Tool Output Controls

Output Control	Description
Note: Transmission must be in transmission neutral for any of these output controls to operate. Refer to the scan tool manual for complete scan tool operating instructions.	
Front Axle Engagement Actuator	**Note:** Transmission must be in transmission Neutral for this output control to operate. This function allows the technician to command the front axle to engage or disengage.
Range Actuator (if equipped)	This function is intended to activate the range actuator control circuits. The range actuator control circuits can be commanded OFF or ON, in either the clockwise or counter-clockwise direction, to ensure all portions of the control module driver are operational. This device control can be operated with the actuator connected to verify actuator operation, or disconnected for circuit testing. The activation of this control must ensure the range actuator lock is activated as well to ensure actuator movement when the range actuator is plugged in. If the device control is activated with the range actuator plugged in, the range actuator shall return to the nearest legal range position after return to normal control.
Range Actuator Lock	**Note:** You may need to perform an ignition OFF in order to recover. This function allows the technician to command the range actuator lock to engage or disengage.
Range Actuator Learn	This function allows the technician to command the transfer case control module to relearn the clutch status after the range actuator, control module, or transfer case has been replaced.
Transfer Case Clutch Engagement	This function is used to override the clutch capacity command of the all wheel drive clutch output.
Transfer Case Clutch Identifier	This device control is used to program the transfer case clutch identifier.
Transfer Case Range	This device control is used to override the transfer case range position.
Transfer Case Neutral Range Indicator	This function allows the technician to command the transfer case neutral range indicator, within the transfer case control switch, ON or OFF.
Transfer Case Clutch Learn Counter Reset Command	This function allows the technician to command a reset of the learn counter.

K71 Transmission Control Module: Scan Tool Information (10L80 (MHS, MQC))

K71 Transmission Control Module — Scan Tool Parameter

Parameter	System State	Expected Value
Operating Conditions: Ignition= On		
9V Reference 1 Circuit Status	—	OK
9V Reference 2 Circuit Status	—	OK
Calculated Line Pressure	Ignition On - Engine Off	550 kPa (80 PSI)
	Ignition On - Engine Running	550 kPa (80 PSI)
	48 km/h (30 MPH)	500 kPa (73 PSI)
	80 km/h (50 MPH)	524 kPa (76 PSI)
Calculated Throttle Position	0 km/h (0 MPH)	0%
	48 km/h (30 MPH)	10%
	80 km/h (50 MPH)	13%

Parameter	System State	Expected Value
Control Module Voltage Signal	Ignition On - Engine Off	12.60 V
	Ignition On - Engine Running	14.40 V
Current Gear	P	Park
	R	Reverse
	N	Neutral
	D	1–10
	L	1–10
Driver Shift Control Mode	S3 Transmission Shift Lever = P, R, N, D	Inactive
	S3 Transmission Shift Lever = L, M, S	Active
Driver Shift Request	No Button Pressed	Inactive
	Upshift» Pressed	Up
	Downshift» Pressed	Down
Engine Coolant Temperature	Ignition On - Engine Off	41°C (105°F)
	Ignition On - Engine Running	52°C (126°F)
	48 km/h (30 MPH)	87°C (189°F)
	80 km/h (50 MPH)	94°C (201°F)
Engine Speed	Ignition On - Engine Off	0 RPM
	Ignition On - Engine Running	582 RPM
	48 km/h (30 MPH)	1173 RPM
	80 km/h (50 MPH)	1277 RPM
Engine Torque	Ignition On - Engine Off	−41 Nm (−30 lb ft)
	Ignition On - Engine Running	15 Nm (11 lb ft)
	48 km/h (30 MPH)	58 Nm (43 lb ft)
	80 km/h (50 MPH)	136 Nm (100 lb ft)
Gear Command	P	Park
	R	Reverse
	N	Neutral
	D	1–10
	L	1–10
Gear Ratio	1	4.68:1
	2	2.98:1
	3	2.15:1
	4	1.77:1
	5	1.52:1
	6	1.27:1
	7	1.00:1
	8	0.85:1
	9	0.69:1
	10	0.64:1
	R	4.86:1
High Side Driver 1 Circuit High Voltage Test Status	—	OK

Parameter	System State	Expected Value
High Side Driver 1 Circuit Low Voltage Test Status	—	OK
High Side Driver 1 Circuit Open Test Status	—	Not Run
High Side Driver 1 Command	Engine ≠Running	Disabled
	Engine = Running	Enabled
High Side Driver 2 Circuit High Voltage Test Status	—	OK
High Side Driver 2 Circuit Low Voltage Test Status	—	OK
High Side Driver 2 Circuit Open Test Status	—	Not Run
High Side Driver 2 Command	Engine ≠Running	Disabled
	Engine = Running	Enabled
Ignition 1 Signal	—	On
Ignition Accessory Signal	—	On
Ignition Voltage	Ignition On - Engine Off	12.60 V
	Ignition On - Engine Running	14.40 V
Park System Status	P	Park
	R, N, D, L, S	Out of Park
Power Mode	—	Run
Propulsion System Status	Engine Running	Active
	Engine Off	Inactive
Shift Limiting Active Reason	—	None
TCC Pressure Control Solenoid Valve Command	0 km/h (0 MPH)	0.00 kPa (0.00 PSI)
	48 km/h (30 MPH)	334 kPa (48 PSI)
	80 km/h (50 MPH)	317 kPa (46 PSI)
TCC Slip Speed	Ignition On - Engine Off	0 RPM
	Ignition On - Engine Running	30 RPM
	48 km/h (30 MPH)	1 RPM
	80 km/h (50 MPH)	47 RPM
Tow/Haul Mode	Inactive	Inactive
	Active	Active
Transmission Control Solenoid Valve 1–9 Calibration Data	—	Valid
Transmission Control Solenoid Valve 1–9 Control Circuit High Voltage Test Status	—	Not RunorOK
Transmission Control Solenoid Valve 1–9 Control Circuit Low Voltage Test Status	—	Not RunorOK
Transmission Control Solenoid Valve 1–9 Control Circuit Open Test Status	—	Not RunorOK
Transmission Control Solenoid Valve 1 Current	Ignition On - Engine Off	0.75 A
	Ignition On - Engine Running	0.98 A
	48 km/h (30 MPH)	0.99 A
	80 km/h (50 MPH)	0.98 A
Transmission Control Solenoid Valve 1 Current Command	Ignition On - Engine Off	0.76 A
	Ignition On - Engine Running	0.98 A
	48 km/h (30 MPH)	1.02 A
	80 km/h (50 MPH)	0.97 A

Parameter	System State	Expected Value
Transmission Control Solenoid Valve 1 Pressure Command	Ignition On - Engine Off	0.00 kPa (0.00 PSI)
	Ignition On - Engine Running	136 kPa (20 PSI)
	48 km/h (30 MPH)	0 kPa (0 PSI)
	80 km/h (50 MPH)	0 kPa (0 PSI)
Transmission Control Solenoid Valve 2 Current	Ignition On - Engine Off	0.82 A
	Ignition On - Engine Running	0.98 A
	48 km/h (30 MPH)	0.99 A
	80 km/h (50 MPH)	0.92 A
Transmission Control Solenoid Valve 2 Current Command	Ignition On - Engine Off	0.83 A
	Ignition On - Engine Running	0.98 A
	48 km/h (30 MPH)	1.02 A
	80 km/h (50 MPH)	0.92 A
Transmission Control Solenoid Valve 2 Pressure Command	Ignition On - Engine Off	0.00 kPa (0.00 PSI)
	Ignition On - Engine Running	2,200 kPa (320 PSI)
	48 km/h (30 MPH)	0.00 kPa (0.00 PSI)
	80 km/h (50 MPH)	2,200 kPa (320 PSI)
Transmission Control Solenoid Valve 3 Current	Ignition On - Engine Off	0.75 A
	Ignition On - Engine Running	1.01 A
	48 km/h (30 MPH)	1.05 A
	80 km/h (50 MPH)	0.88 A
Transmission Control Solenoid Valve 3 Current Command	Ignition On - Engine Off	0.76 A
	Ignition On - Engine Running	1.02 A
	48 km/h (30 MPH)	1.06 A
	80 km/h (50 MPH)	0.89 A
Transmission Control Solenoid Valve 3 Pressure Command	Ignition On - Engine Off	0 kPa (0 PSI)
	Ignition On - Engine Running	0 kPa (0 PSI)
	48 km/h (30 MPH)	2,200 kPa (320 PSI)
	80 km/h (50 MPH)	2,200 kPa (320 PSI)
Transmission Control Solenoid Valve 4 Current	Ignition On - Engine Off	1.2 A
	Ignition On - Engine Running	0.89 A
	48 km/h (30 MPH)	0.69 A
	80 km/h (50 MPH)	0.88 A
Transmission Control Solenoid Valve 4 Current Command	Ignition On - Engine Off	1.2 A
	Ignition On - Engine Running	0.89 A
	48 km/h (30 MPH)	0.70 A
	80 km/h (50 MPH)	0.89 A
Transmission Control Solenoid Valve 4 Pressure Command	Ignition On - Engine Off	0 kPa (0 PSI)
	Ignition On - Engine Running	0 kPa (0 PSI)
	48 km/h (30 MPH)	2,200 kPa (320 PSI)
	80 km/h (50 MPH)	173 kPa (25 PSI)

Parameter	System State	Expected Value
Transmission Control Solenoid Valve 5 Current	Ignition On - Engine Off	0.04 A
	Ignition On - Engine Running	0.04 A
	48 km/h (30 MPH)	0.46 A
	80 km/h (50 MPH)	0.58 A
Transmission Control Solenoid Valve 5 Current Command	Ignition On - Engine Off	0.04 A
	Ignition On - Engine Running	0.04 A
	48 km/h (30 MPH)	0.47 A
	80 km/h (50 MPH)	0.59 A
Transmission Control Solenoid Valve 5 Pressure Command	Ignition On - Engine Off	0 kPa (0 PSI)
	Ignition On - Engine Running	0 kPa (0 PSI)
	48 km/h (30 MPH)	2200 kPa (320 PSI)
	80 km/h (50 MPH)	170 kPa (25 PSI)
Transmission Control Solenoid Valve 6 Current	Ignition On - Engine Off	0.57 A
	Ignition On - Engine Running	0.54 A
	48 km/h (30 MPH)	0.53 A
	80 km/h (50 MPH)	1.20 A
Transmission Control Solenoid Valve 6 Current Command	Ignition On - Engine Off	0.57 A
	Ignition On - Engine Running	0.54 A
	48 km/h (30 MPH)	0.54 A
	80 km/h (50 MPH)	1.20 A
Transmission Control Solenoid Valve 6 Pressure Command	Ignition On - Engine Off	0 kPa (0 PSI)
	Ignition On - Engine Running	2,200 kPa (320 PSI)
	48 km/h (30 MPH)	2,200 kPa (320 PSI)
	80 km/h (50 MPH)	2,200 kPa (320 PSI)
Transmission Control Solenoid Valve 7 Current	Ignition On - Engine Off	0.01 A
	Ignition On - Engine Running	0.78 A
	48 km/h (30 MPH)	0.54 A
	80 km/h (50 MPH)	1.20 A
Transmission Control Solenoid Valve 7 Current Command	Ignition On - Engine Off	0.01 A
	Ignition On - Engine Running	0.78 A
	48 km/h (30 MPH)	0.54 A
	80 km/h (50 MPH)	0.51 A
Transmission Control Solenoid Valve 8 Current	Ignition On - Engine Off	0.00 A
	Ignition On - Engine Running	0.00 A
	48 km/h (30 MPH)	0.52 A
	80 km/h (50 MPH)	0.50 A
Transmission Control Solenoid Valve 8 Current Command	Ignition On - Engine Off	0.00 A
	Ignition On - Engine Running	0.78 A
	48 km/h (30 MPH)	0.54 A
	80 km/h (50 MPH)	1.20 A
Transmission Control Solenoid Valve 9	—	OfforOn

Parameter	System State	Expected Value
Transmission Fluid Temperature	Ignition On - Engine Off	33°C (91°F)
	Ignition On - Engine Running	42°C (108°F)
	48 km/h (30 MPH)	49°C (120°F)
	80 km/h (50 MPH)	63°C (145°F)
Transmission Hot Mode	—	No
Transmission Input Speed Sensor Direction	Forward	Forward
	Reverse	Reverse
Transmission Input Speed Sensor Direction Signal	Forward	0.05 ms
	Reverse	0.18 ms
Transmission Intermediate Speed Sensor 1	0 km/h (0 MPH)	0 RPM
	48 km/h (30 MPH)	1170 RPM
	80 km/h (50 MPH)	2754 RPM
Transmission Intermediate Speed Sensor 1 Direction	Forward	Forward
	Reverse	Reverse
Transmission Intermediate Speed Sensor 1 Direction Signal	Forward	0.05 ms
	Reverse	0.18 ms
Transmission Intermediate Speed Sensor 2	0 km/h (0 MPH)	0 RPM
	48 km/h (30 MPH)	1166 RPM
	80 km/h (50 MPH)	2754 RPM
Transmission Intermediate Speed Sensor 2 Direction	Forward	Forward
	Reverse	Reverse
Transmission Intermediate Speed Sensor 2 Direction Signal	Forward	0.05 ms
	Reverse	0.18 ms
Transmission ISS	Ignition On - Engine Off	0 RPM
	Ignition On - Engine Running	551 RPM
	48 km/h (30 MPH)	1166 RPM
	80 km/h (50 MPH)	1184 RPM
Transmission OSS	0 km/h (0 MPH)	0 RPM
	48 km/h (30 MPH)	1159 RPM
	80 km/h (50 MPH)	1720 RPM
Transmission Output Speed Sensor Direction	Forward	Forward
	Reverse	Reverse
Transmission Output Speed Sensor Direction Signal	Forward	0.05 ms
	Reverse	0.18 ms
Transmission Park Valve Lock Solenoid Actuator	Park	Off
	Out of Park	On
Transmission Park Valve Position Sensor 1	Park	2.00 V
	Out of Park	0.80 V
Transmission Park Valve Position Sensor 1 Status	Park	Park
	Out of Park	Out of Park
Transmission Park Valve Position Sensor 2	Park	0.80 V
	Out of Park	1.98 V

Parameter	System State	Expected Value
Transmission Park Valve Position Sensor 2 Status	Park	Park
	Out of Park	Out of Park
Transmission Range Control Valve 1 Position Switch	Park	0.80 V
	Out of Park	1.98 V
Transmission Range Control Valve 1 Position Switch Status	Park	Complete
	Out of Park	Failed
Transmission Range Sensor 1	P	13%
	R	47%
	N	61%
	D	75%
	L	86%
Transmission Range Sensor 2	P	87%
	R	53%
	N	39%
	D	25%
	L	14%
Vehicle Speed	—	Varies

K71 Transmission Control Module — Scan Tool Control Function

Control Function	Description
High Side Driver 1–2	Overrides the state of the High Side Driver Output
Shift Transmission Gear	Overrides the commanded gear output
Transmission Control Solenoid Valve 1–8	Overrides the state of the Transmission Control Solenoid Valve — On or Off
Transmission Control Solenoid Valve 1–8 Current	Overrides the current of the Transmission Control Solenoid Valve — 0–1.2 A
Torque Converter Clutch— Dynamic Test	Overrides the state of the Transmission Control Solenoid Valve that operates the Torque Converter Clutch, to be used during a road test.
Torque Converter Clutch— Static Test	Overrides the state of the Transmission Control Solenoid Valve that operates the Torque Converter Clutch, to be used when the engine is not running.

K73 Telematic Control Module: Scan Tool Information

Telematic Control Module Scan Tool Data Parameters

Parameter	System State	Expected Value	Description
Operating Conditions: Ignition ON			
GPS Data			
• Dead Reckoning Calibration Status	—	Calibrated or Not Calibrated	Indicates the dead reckoning calibration status.
• Position Calibration Method	—	Varies	Indicates the method used to determine current location. (0) GPS, (1) Wheel Speed Dead Reckoning only, (2) Combined Wheel Speed and GPS, (3) Gyro only, (4) Combined Gyro and GPS, (5) No Fix
• Month	—	MM	This displays the current month.
• Day	—	DD	This displays the current day of the month.

Parameter	System State	Expected Value	Description
• Year	—	YY	This displays the current year.
• Hour	—	HH	This displays the GPS current hour (24 hour format – GMT).
• Minute	—	MM	This displays the GPS current minute.
• Second	—	SS	This displays the GPS current second.
• Number of Satellites Tracked	—	Varies	The scan tool displays the number of satellites being tracked by the Telematic Control Module.
Signal Strength Data			
• GSM Signal Strength	—	Varies	The scan tool displays 0–127. This is the Telematic Control Module signal strength.
• Current Public Land Mobile Network	—	Varies	Identifies the cellular communications network currently in use by the Telematic Control Module. Each network has a unique decimal number assigned to it for identification.
Bluetooth Data			
• Bluetooth	—	Enabled	Indicates if the Bluetooth system is enabled or disabled.
• Bluetooth Link Status	—	Varies	Indicates the current link status. (0) Unconnected, (1) Connected / Idle, (2) Call active, (3) 3-way calling active
• Bluetooth Link Quality	—	Varies	The scan tool displays a decimal value between 0 and 255.
• Bluetooth Phone to Telematic Control Module Authentication Status	—	Active or Inactive	Displays the bluetooth phone to Telematic Control Module authentication status.
• Bluetooth Phone to Telematic Control Module Communication Status	—	Active or Inactive	Displays the bluetooth phone to Telematic Control Module status.
• Bluetooth Phone Voice Recognition Status	—	Active or Inactive	Displays the bluetooth phone to voice recognition status.
WLAN Device Data			
Off-Board Navigation	—	Enabled or Disabled	Indicates if Off-Board Navigation is enabled or disabled
Wireless LAN	—	Enabled or Disabled	Indicates the capability of the wireless communication of the Telematic Control Module
Number of WLAN Devices	—	Varies	Indicates the number of Wireless devices present
Active WLAN 2.4GHz Chennel	—	Varies	Indicates the active Wireless channel being used on the 2.4 GHz frequency
WLAN Link Status	—	Radio System – Never, Remembered but Not Associated or Associated	Indicates the link status of the Telematic Control Module and Infotainment system
GSM Signal Strength	—	Varies	State for Received Signal Strength Indicator
Mobile Communication Standard	—	2G, 3G, 4G or 4G LTE	State for Cellular Data Connection. Indicates the currently used data rate speed
WLAN Password	—	Varies	Indicates the Telematic Control Module Wireless Password
WLAN SSID (Service Set Identifier)	—	Varies	Indicates the Telematic Control Module Wireless Service Name
WLAN Encryption – WPA (Wi–Fi Protected Access)	—	Active or Inactive	Indicates if the WLAN Encryption – WPA (Wi–Fi Protected Access) is Active or Inactive

Parameter	System State	Expected Value	Description
WLAN Encryption – WPA2 (Wi–Fi Protected Access II)	—	Active or Inactive	Indicates if the WLAN Encryption – WPA2 (Wi–Fi Protected Access II) is Active or Inactive
WLAN Encryption – AES (Advanced Encryption Standard)	—	Active or Inactive	Indicates if the WLAN Encryption – AES (Advanced Encryption Standard) is Active or Inactive
WLAN Encryption – TKIP (Temporal Key Intergrity Protocol)	—	Active or Inactive	Indicates if the WLAN Encryption – TKIP (Temporal Key Integrity Protocol) is Active or Inactive

Telematic Control Module Scan Tool Output Controls

Output Control	Description
B1000 Information	This shows the data recorded when DTC B1000 was set in the Telematic Control Module.
Green Indicator	The Telematic Control Module illuminates the green LED when ON is selected.
Phone Call Test	When ON is selected, Telematic Control Module commands OnStar to connect to the OnStar Center.
Red Indicator	The Telematic Control Module illuminates the red LED when ON is selected.
Preferred Roaming List Update	The Telematic Control Module performs a preferred roaming list (PRL) update when this is selected.
Remote Vehicle Speed Limiting Reset	This function resets the speed limiting feature.

K85P Restraints Occupant Classification System Module - Passenger: Scan Tool Information

Restraint Occupant Classification System Module Scan Tool Data Parameters

Parameter	Expected Value	Definition
Operating Conditions: Ignition ON		
Base Model Part Number	Varies, 8 Digit Number	The scan tool displays the part number of the ROCSM which is stored in non volatile memory.
Battery Voltage	Volts	The scan tool will display battery voltage.
Calibration Part Number	Varies, 8 Digit Number	The scan tool displays the part number of the calibration file in the ROCSM.
End Model Part Number	Varies, 8 Digit Number	The scan tool displays the part number of the ROCSM in production.
Manufacturer's Traceability Number	Varies, 16 Digit Number	The scan tool displays the 16 digit traceability number in the ROCSM.
Passenger Air Bag Enable/Disable Request by Restraint Occupant Classification System Module	Disable	The scan tool displays the Passenger Air Bag Enable/ Disable Request by Restraint Occupant Classification System Module.
Restraint Occupant Classification Module Primary Key	Hex Value	The scan tool indicates the primary key Hex value.
Restraint Occupant Classification System Reporting DTC(s)	Yes/No	The ROCSM will report if there are DTCs set in the Restraint Occupant Classification module.
Passenger Seat Occupancy Status	Empty Seat	The scan tool displays Undefined, Empty Seat, Occupied, or Invalid. This is the state of the passenger seat if it is occupied or empty and monitored by the Restraint Occupant Classification System.
Power Mode	Off / Accessory / Run / Crank Request	The scan tool will display the power mode of the vehicle.
Primary Key Status	Valid/Invalid	The scan tool displays Valid if the primary key matches what is stored to memory in the ROCSM.

Parameter	Expected Value	Definition
Received Primary Key	Hex Value	The scan tool displays a Hex value indicating the ROCSM received primary key data.
Software Part Number	Varies, 8 Digit Number	The scan tool displays the software part number in the ROCSM.

K124 Image Processing Module: Scan Tool Information (UGN)

Image Processing Module Scan Tool Data Parameters

Parameter	System State	Expected Value	Description
Operating Conditions: Vehicle in Run power mode, engine off.			
Steering Wheel Angle Sensor Learn Status	—	Learned	This displays the current learn status of the steering wheel angle sensor
Lane Keep Assist Malfunction Detection Status	—	OK	This displays whether or not there is a current malfunction detected in the Lane Keep Assist system.
Frontview Camera - Windshield Lane Detection Status	—	OK	This displays the current lane detection status of the Frontview Camera.
Power Steering System Assist Status	—	OK	This displays the current readiness status of the power steering assist system.
Power Steering System Status	—	OK	This displays the current status of the power steering system.
Active Rear Steering System Status	—	OK	This displays the current status of the active rear steering system
Lane Keep Assist Disabled By External Input	—	No	This displays whether or not there is an external input disabling the Lane Keep Assist system.
Lane Keep Assist Disabled By Switch Input	—	No	This displays whether or not there is a switch input disabling the Lane Keep Assist system.
Trailer Detected	—	No	This displays whether or not there is a trailer detected by the system.
Emergency Braking Active	—	No	This displays whether or not emergency braking is active.
Traction Control Active	—	No	This displays whether or not traction control is active.
Vehicle Stability Control Active	—	No	This displays whether or not the vehicle stability control is active.
ABS Active	—	No	This displays whether or not the ABS system is active.
Vehicle Speed Too High or Low	—	No	This displays whether or not the vehicle speed is too high or too low.
Power Mode Set to Run	—	Yes	This displays whether or not the vehicle power mode is set to RUN.
Vehicle Stability Control System Status	—	Ready to Assist	This displays the readiness status of the vehicle stability control system.
Unreliable Lane Markings - Right Side	—	No	This displays if the driver assist system is detecting unreliable lane markings to the right side of the vehicle.
Unreliable Lane Markings - Left Side	—	No	This displays if the driver assist system is detecting unreliable lane markings to the left side of the vehicle.
Lane Curvature Right too High	—	No	This displays if the driver assist system is detecting a curve that is too tight on the right side of the vehicle.
Lane Curvature Left too High	—	No	This displays if the driver assist system is detecting a curve that is too tight on the left side of the vehicle.
Rural Road	—	Not Detected	This displays whether or not a rural road is detected.
Construction Area	—	Not Detected	This displays whether or not a construction zone is detected.

Parameter	System State	Expected Value	Description
Hands-Free Steering Wheel Driving Detected	—	No	This displays whether or not the drivers hand is detected on the steering wheel.
Excessive Lateral Acceleration Detected	—	No	This displays whether or not the vehicle detects an excessive lateral movement.
Lane Curvature Error - Right Side	—	No	This displays whether or not the driver assist system detects an error while following a right curving road.
Lane Curvature Error - Left Side	—	No	This displays whether or not the driver assist system detects an error while following a left curving road.
Lane Marking Width Error - Right Side	—	No	This displays whether or not the driver assist system detects an error with the size of lane markings on the right side of the vehicle.
Lane Marking Width Error - Left Side	—	No	This displays whether or not the driver assist system detects an error with the size of lane markings on the left side of the vehicle.
Lane Marking Position Error - Right Side	—	No	This displays whether or not the driver assist system detects an error with the positioning of lane markings on the right side of the vehicle.
Lane Marking Position Error - Left Side	—	No	This displays whether or not the driver assist system detects an error with the positioning of lane markings on the left side of the vehicle.
Lane Marking Quality - Right Side	—	OK	This displays whether the quality of lane markings on the right side of the vehicle are adequate.
Lane Marking Quality - Left Side	—	OK	This displays whether the quality of lane markings on the left side of the vehicle are adequate.
Lane Width	—	OK	This displays whether the width of the current road lane is adequate.
Lane Keep Assist Switch Status	—	OK	This displays the current status of the lane keep assist switch.
Left and Right Lane Markings	—	Detected	This displays the detection status of lane markings on the left and right side of the vehicle.
Lane Curvature Not Plausible	—	No	This displays the plausibility of expected road curvature vs observed by the system.
Lane Curvature Rate - Right	—	OK	This displays the curvature to the right as either OK or Excessive
Lane Curvature Rate - Left	—	OK	This displays the curvature to the left as either OK or Excessive
Look Ahead Distance Further Than View Range - Right	—	No	This displays whether or not the vehicle distance to an object on the right side of the vehicle is greater than the frontview camera’s field of view.
Look Ahead Distance Further Than View Range - Left	—	No	This displays whether or not the vehicle distance to an object on the left side of the vehicle is greater than the frontview camera’s field of view.
Brake Pedal Position Signal Invalid	—	No	This displays the validity of the brake pedal position sensor signal.
Accelerator Pedal Position Signal Invalid	—	No	This displays the validity of the accelerator pedal position sensor signal.
Transmission Gear Status Invalid	—	No	This displays the validity of the transmission gear status.
Yaw Rate Signal Invalid	—	No	This displays the validity of the yaw rate signal.
Lateral Acceleration Rate Signal Invalid	—	No	This displays the validity of the lateral acceleration rate signal.
Driver Applied Steering Torque Signal Invalid	—	No	This displays the validity of the driver applied steering torque signal.

Parameter	System State	Expected Value	Description
Hands-Free Steering Wheel Detection Signal Invalid	—	No	This displays the validity of the hands-free steering wheel detection signal.
Steering Torque Overlay Signal Invalid	—	No	This displays the validity of the steering torque overlay signal.
ABS Status	—	Ready to Assist	This displays the readiness status of the ABS system.
Teen Driver Signal Invalid	—	No	This displays the validity of the teen driver signal.
Traction Control System Status Signal Invalid	—	No	This displays the validity of the traction control system status signal.
Traction Control Status	—	Ready to Assist	This displays the readiness status of the traction control system.
Vehicle Stability Control System Status Signal Invalid	—	No	This displays the validity of the vehicle stability control system status signal.
Steering Wheel Angle Sensor Signal Invalid	—	No	This displays the validity of the steering wheel angle sensor signal.
Vehicle Speed Signal Invalid	—	No	This displays the validity of the vehicle speed signal.
Vehicle Stability Control System Disabled by Driver	—	No	This displays whether or not the vehicle stability control system has been disabled by the driver.
Super Cruise Engaged	—	No	This displays whether or not the Super Cruise system is engaged.
Side Object Detection Status	—	OK	This displays the current status of the Side Object Detection system.
Construction Zone Detection Signal Invalid	—	No	This displays the validity of the construction zone detection signal.
Power Mode Signal Status Invalid	—	No	This displays the validity of the vehicle power mode signal.
Turn Signal Switch Signal Invalid	—	No	This displays the validity of the turn signal switch signal.
Trailer Connected Signal Invalid	—	No	This displays the validity of the trailer connection signal.
Time to Collision Signal Invalid	—	No	This displays the validity of the time to collision signal.
ABS Status Signal Invalid	—	No	This displays the validity of the ABS status signal.
Power Mode	—	Run	This displays the current power mode of the vehicle. This can read OFF, Accessory, RUN, Start, or Propulsion Active.

Drivers Assist System Disable History Conditions

Refer to [Link target (target-id 331106-) not found] for a list of all available conditions that can cause the driver assist systems functions to be inhibited or disabled.

Lane Keep Assist Event History

Control Module	Parameter Name	Normal Value	Unit	Description
Image Processing Module	Lane Keep Assist Event History 1-8 - Status	Blank	Blank	The status of the diagnostic
Image Processing Module	Lane Keep Assist Event History 1-8	Blank	Blank	
Image Processing Module	Lane Keep Assist Event History 1-8 - Ignition Cycles Since Last Diagnostic Event	Blank	Counts	Ignition Cycles Since Last Diagnostic Event

Control Module	Parameter Name	Normal Value	Unit	Description
Image Processing Module	Lane Keep Assist Event History 1-8 - Malfunction Counter	Blank	Counts	Number of malfunctions
Image Processing Module	Lane Keep Assist Event History 1-8 Odometer at First Malfunction	Blank	km	Odometer at First Malfunction/failure
Image Processing Module	Lane Keep Assist Event History 1-8 Odometer at Last Malfunction	Blank	km	Odometer at Last Malfunction/failure

Front Impact Mitigation Event History

Control Module	Parameter Name	Normal Value	Unit	Description
Image Processing Module	Front Impact Mitigation Event History 1-8 - Status	Blank	Blank	The status of the diagnostic
Image Processing Module	Front Impact Mitigation Event History 1-8	Blank	Blank	
Image Processing Module	Front Impact Mitigation Event History 1-8 - Ignition Cycles Since Last Diagnostic Event	Blank	Counts	Ignition Cycles Since Last Diagnostic Event
Image Processing Module	Front Impact Mitigation Event History 1-8 - Malfunction Counter	Blank	Counts	Number of malfunctions
Image Processing Module	Front Impact Mitigation Event History 1-8 - Odometer at First Malfunction	Blank	km	Odometer at First Malfunction/failure
Image Processing Module	Front Impact Mitigation Event History 1-8 - Odometer at Last Malfunction	Blank	km	Odometer at Last Malfunction/failure

Adaptive Cruise Control Disengage History

Control Module	Parameter Name	Normal Value	Unit	Description
Image Processing Module	Adaptive Cruise Control Disengage History 1-8 - Status	Blank	Blank	The status of the diagnostic
Image Processing Module	Adaptive Cruise Control Disengage History 1-8	Blank	Blank	
Image Processing Module	Adaptive Cruise Control Disengage History 1-8 - Ignition Cycles Since Last Diagnostic Event	Blank	Counts	Ignition Cycles Since Last Diagnostic Event

Control Module	Parameter Name	Normal Value	Unit	Description
Image Processing Module	Adaptive Cruise Control Disengage History 1-8 - Malfunction Counter	Blank	Counts	Number of malfunctions
Image Processing Module	Adaptive Cruise Control Disengage History 1-8 Odometer at First Malfunction	Blank	km	Odometer at First Malfunction/failure
Image Processing Module	Adaptive Cruise Control Disengage History 1-8 Odometer at Last Malfunction	Blank	km	Odometer at Last Malfunction/failure

Adaptive Cruise Control Inhibit History

Control Module	Parameter Name	Normal Value	Unit	Description
Image Processing Module	Adaptive Cruise Control Inhibit History 1-8 - Status	Blank	Blank	The status of the diagnostic
Image Processing Module	Adaptive Cruise Control Inhibit History 1-8	Blank	Blank	
Image Processing Module	Adaptive Cruise Control Inhibit History 1-8 - Ignition Cycles Since Last Diagnostic Event	Blank	Counts	Ignition Cycles Since Last Diagnostic Event
Image Processing Module	Adaptive Cruise Control Inhibit History 1-8 - Malfunction Counter	Blank	Counts	Number of malfunctions
Image Processing Module	Adaptive Cruise Control Inhibit History 1-8 Odometer at First Malfunction	Blank	km	Odometer at First Malfunction/failure
Image Processing Module	Adaptive Cruise Control Inhibit History 1-8 Odometer at Last Malfunction	Blank	km	Odometer at Last Malfunction/failure

K124 Image Processing Module: Scan Tool Information (UKL)

Note: Due to software and hardware variations, not all information may be applicable.

Image Processing Module Scan Tool Data Parameters

Parameter	System State	Expected Value	Description
Operating Conditions: Vehicle in Run power mode, engine off.			
Lane Keep Assist Status	—	Enabled	This displays the current status of the Lane Keep Assist system.
Super Cruise Status	—	OFF	This displays the current status of the Super Cruise system.
Adaptive Cruise Control Status	—	OFF	This displays the current status of the Adaptive Cruise Control system.

Parameter	System State	Expected Value	Description
Heated Steering Wheel Auto Command	—	OFF	This displays the current status of the automatic heated steering wheel system.
Vehicle Dynamic Sensor Orientation Calibration Status	—	Calibrated	This displays the current calibration status as either “Calibrated”, “In Progress”, or “Not Calibrated”
Vehicle Dynamic Sensor Offset Calibration Status	—	Calibrated	This displays the current calibration status as either “Calibrated”, “In Progress”, or “Not Calibrated”
Steering Wheel Touch Sensing	—	Inactive	This displays the current calibration status as either “Calibrated” or “Not Calibrated”
Steering Wheel Light Bar Color Command	—	OFF	This displays the current status of the steering wheel LED light bar color..
Power Mode	—	ACCESSORY	This displays the current power mode of the vehicle as “OFF”, “ACCESSORY”, “RUN”, or “START REQUEST”

Drivers Assist System Disable History Conditions

Refer to [Link target (target-id 331106-) not found] for a list of all available conditions that can cause the driver assist systems functions to be inhibited or disabled.

Environmentally Induced Disengagement Event History

Control Module	Parameter Name	Normal Value	Unit	Description
Image Processing Module - Processor 1 and Processor 2	Environmentally Induced Disengagement Event History 1-8 - Status	Blank	Blank	The status of the diagnostic
Image Processing Module - Processor 1 and Processor 2	Environmentally Induced Disengagement Event History 1-8	Blank	Blank	Disable reason
Image Processing Module - Processor 1 and Processor 2	Environmentally Induced Disengagement Event History 1-8 - Ignition Cycles Since Last Diagnostic Event	Blank	Counts	Ignition Cycles Since Last Diagnostic Event
Image Processing Module - Processor 1 and Processor 2	Environmentally Induced Disengagement Event History 1-8 - Malfunction Counter	Blank	Counts	Number of malfunctions
Image Processing Module - Processor 1 and Processor 2	Environmentally Induced Disengagement Event History 1-8 Odometer at First Malfunction	Blank	km	Odometer at First Malfunction/failure
Image Processing Module - Processor 1 and Processor 2	Environmentally Induced Disengagement Event History 1-8 Odometer at Last Malfunction	Blank	km	Odometer at Last Malfunction/failure

Automatically Induced Disengagement Event History

Control Module	Parameter Name	Normal Value	Unit	Description
Image Processing Module - Processor 1 and Processor 2	Automatically Induced Disengagement Event History 1-8 - Status	Blank	Blank	The status of the diagnostic
Image Processing Module - Processor 1 and Processor 2	Automatically Induced Disengagement Event History 1-8	Blank	Blank	Disable reason
Image Processing Module - Processor 1 and Processor 2	Automatically Induced Disengagement Event History 1-8 - Ignition Cycles Since Last Diagnostic Event	Blank	Counts	Ignition Cycles Since Last Diagnostic Event
Image Processing Module - Processor 1 and Processor 2	Automatically Induced Disengagement Event History 1-8 - Malfunction Counter	Blank	Counts	Number of malfunctions
Image Processing Module - Processor 1 and Processor 2	Automatically Induced Disengagement Event History 1-8 - Odometer at First Malfunction	Blank	km	Odometer at First Malfunction/failure
Image Processing Module - Processor 1 and Processor 2	Automatically Induced Disengagement Event History 1-8 - Odometer at Last Malfunction	Blank	km	Odometer at Last Malfunction/failure

Driver Induced Disengagement Event History

Control Module	Parameter Name	Normal Value	Unit	Description
Image Processing Module - Processor 1 and Processor 2	Driver Induced Disengagement Event History 1-8 - Status	Blank	Blank	The status of the diagnostic
Image Processing Module - Processor 1 and Processor 2	Driver Induced Disengagement Event History 1-8	Blank	Blank	Disable reason
Image Processing Module - Processor 1 and Processor 2	Driver Induced Disengagement Event History 1-8 - Ignition Cycles Since Last Diagnostic Event	Blank	Counts	Ignition Cycles Since Last Diagnostic Event
Image Processing Module - Processor 1 and Processor 2	Driver Induced Disengagement Event History 1-8 - Malfunction Counter	Blank	Counts	Number of malfunctions
Image Processing Module - Processor 1 and Processor 2	Driver Induced Disengagement Event History 1-8 Odometer at First Malfunction	Blank	km	Odometer at First Malfunction/failure
Image Processing Module - Processor 1 and Processor 2	Driver Induced Disengagement Event History 1-8 Odometer at Last Malfunction	Blank	km	Odometer at Last Malfunction/failure

Lane Change on Demand Inhibited Event History

Control Module	Parameter Name	Normal Value	Unit	Description
Image Processing Module - Processor 1 and Processor 2	Lane Change on Demand Inhibited Event History 1-8 - Status	Blank	Blank	The status of the diagnostic
Image Processing Module - Processor 1 and Processor 2	Lane Change on Demand Inhibited Event History 1-8	Blank	Blank	Inhibit reason
Image Processing Module - Processor 1 and Processor 2	Lane Change on Demand Inhibited Event History 1-8 - Ignition Cycles Since Last Diagnostic Event	Blank	Counts	Ignition Cycles Since Last Diagnostic Event
Image Processing Module - Processor 1 and Processor 2	Lane Change on Demand Inhibited Event History 1-8 - Malfunction Counter	Blank	Counts	Number of malfunctions
Image Processing Module - Processor 1 and Processor 2	Lane Change on Demand Inhibited Event History 1-8 Odometer at First Malfunction	Blank	km	Odometer at First Malfunction/failure
Image Processing Module - Processor 1 and Processor 2	Lane Change on Demand Inhibited Event History 1-8 Odometer at Last Malfunction	Blank	km	Odometer at Last Malfunction/failure

Image Processing Module Output Controls

Output Control	Description
Vehicle Dynamic Sensor Offset Calibration	Learns the initial bias values for roll, yaw, and pitch rate for the multi-axis acceleration sensor.
Steering Wheel Light Bar	Requests the steering wheel light bar LED color and flash rate.

K160 Brake System Control Module: Scan Tool Information

The Electronic Brake Control Module (EBCM) scan tool data parameters list contains all ABS related parameters that are available on the scan tool. The list is arranged in alphabetical order. A given parameter may appear in any one of the data lists.

Brake System Control Module Scan Tool Data Parameters

Parameter	System State	Expected Value	Description
Operating Conditions: Ignition ON			
ABS Active SIgnal		OK/Malfunction	Determine the state of the ABS system
ABS Pump Motor Voltage		0 V	The scan tool displays the commanded pump motor voltage.
Actual Brake System Plunger Motor Torque		Varies	The scan tool displays the motor torque feedback.
Actual Brake System Plunger Position		Varies	The scan tool displays Plunger Position Feedback
Actual Brake System Plunger Speed		Varies	The scan tool displays Plunger Speed Feedback

Parameter	System State	Expected Value	Description
All Wheel Drive		Active/Inactive	The scan tool displays when in four wheel drive (if equipped).
Antilock Braking System		OK/Malfunction	The scan tool displays OK or Malfunction. Malfunction is displayed if there is an ABS malfunction.
Automatic Brake Control Gain Request from Brake System Control Module		Varies	The scan tool displays a percentage of Autonomous Control Gain Request from BSCM
Automatic Braking Event		Detected/Not Detected	The scan tool displays Automatic Trailer Braking Event
Automatic Brake Request from Brake System Control Module		Yes/No	The scan tool displays Trailer Brake Autonomous Control Status
Automatic Braking Active Signal		Okay/ Malfunction	ABS Active Malfunction indicates invalid protected ABS active data received from Automatic Brake System Control Module
Automatic Braking Torque Signal		Okay/ Malfunction	The scan tool displays Automatic Brake Torque Signal Failure
Autonomous Braking Request Signal		Okay/ Malfunction	Autonomous Signal malfunction indicates invalid autonomous braking data received from Automatic Brake System Control Module
Brake Fluid Level Sensor		Okay/Low	The scan tool displays OK when the brake fluid is at correct level and Low when the brake fluid is low.
Brake Fluid Reservoir Seperating Solenoid Valve		Active/Inactive	The scan tool displays Eboost System Internal Valves Feedback Status Reservoir Seperation Valve Commanded
Brake Master Cylinder Separating Solenoid Valve 1		Active/Inactive	The scan tool displays Eboost System Internal Valves Feedback Status Circuit Seperating Valve 1 Commanded.
Brake Master Cylinder Separating Solenoid Valve 2		Active/Inactive	The scan tool displays Eboost System Internal Valves Feedback Status Circuit Seperating Valve 2 Commanded
Brake Pad Wear Malfunction Signal		None Propulstion Active, Vehicle Speed, Malfunction, Reset	The scan tool displays the Brake Pad Life Monitoring Axle Reset Reject Reason
Brake Pad Wear Signal		Low/High	The scan tool displays Brake Pad Wear Input Status
Brake Pedal Position Sensor	Brake pedal released	Inactive	The scan tool displays Inactive or Active depending on the state of the brake pedal.
	Brake pedal applied	Active	
Brake Pedal Simulator Separating Solenoid Valve		Active/Inactive	System Internal Valves Feedback Status Simulator Separating Valve Commanded
Brake Pressure Signal		Okay/ Malfunction	The scan tool displays Brake Pressure Signal Failure
Brake System		Active/Inactive	The scan tool displays the boost status.
Brake System Plunger Motor Resistance		Varies	The scan tool displays the calculated Motor Resistance
Brake System Plunger Motor Temperature 1		Varies	The scan tool displays the Module Motor Driver Temperature CH1
Brake System Plunger Motor Temperature 2		Varies	The scan tool displays the Module Motor Driver Temperature CH2

Parameter	System State	Expected Value	Description
Brake System Plunger Separating Solenoid Valve 1		Active/Inactive	The scan tool displays System Internal Valves Feedback Status Plunger Separating Valve 1 Commanded.
Brake System Plunger Separating Solenoid Valve 2		Active/Inactive	System Internal Valves Feedback Status Plunger Separating Valve 2 Commanded
Brake Pressure		Varies	The scan tool displays brake apply pressure.
Brake Pressure Created by Applying Brake Pedal		Varies	The scan tool displays Brake Pedal Driver Applied Pressure
Brake Pressure Sensor	Brake pedal released	0–1 V	The scan tool displays 0–5 V depending on the applied hydraulic brake pressure.
	Brake pedal applied	1–5 V	
Brake Pressure Sensor	Brake pedal released	2000–3000 kPa	The scan tool displays the actual pressure applied to the brake pedal.
Brake Pressure Test		Incomplete, Active, Complete, Failed	The scan tool displays the Wheel Pressure Control Feedback Test Status
Brake System Plunger Motor Current Limitation		Active/Inactive	Eboost Motor Current Limitation
Brake System Plunger Motor Status		Active/Inactive	The scan tool displays if the Eboost Motor Status has limitations.
Brake System Plunger Motor Temperature Limitation		Active/Inactive	Eboost Motor Temperature Limitation
Brake System Plunger Motor Torque Limitation		Active/Inactive	Eboost Motor Torque Limitation
Brake System Plunger Travel		Varies	The scan tool displays the plunger travel.
Calculated Input rod Position		Varies	The scan tool displays the EBoost Input Rod Stroke - Calculated
Delivered Torque		Varies	The scan tool displays 0–100% depending on the how much torque the engine is delivering.
Desired Trailer Brake Control Duty Cycle		OK/Malfunction	The banded trailer brake duty cycle sent to the Trailer Brake Module. It represents the requested duty cycle as transformed to allow diagnostics on the transmission line
Desired Brake System Plunger Position		Varies	The scan tool displays the command Plunger Position
Desired Brake System Plunger Speed		Varies	The scan tool displays the commanded Plunger Speed.
Desired Brake System Plunger Motor Torque		Varies	The scan tool displays the commanded Motor Torque.
Deviation Between Manual Trailer Brake Apply Request Signal 1 and 2		Varies	The scan tool displays Trailer Brake Manual Apply Switch Position Error
Diagnostic Mode		Active/Inactive	Diagnostic Mode Status
Driver Initiated Brake Event		Not Detected/ Detected	The scan tool displays Brake Event Detected
Dynamic Rear Proportioning Status		Okay/ Malfunction	The scan tool displays Dynamic Rear Proportioning System Failure Status
Engine Drag Control Status		Okay/ Malfunction	The scan tool displays Engine Drag Control Status
Front Brake Pad Wear Sensors		Varies	The scan tool displays Front Axle Brake Pad Wear Sensor Voltage

Parameter	System State	Expected Value	Description
Induced Voltage by Trailer Brake Coil		Varies	The scan tool displays Inductance Measurement Voltage
Input Rod Position 1		Varies	The scan tool display the position of the Input Rod Stroke 1
Input Rod Position 2		Varies	The scan tool display the position of the Input Rod Stroke 2
Input Rod Position Sensors 1 and 2 Supply Voltage		Varies	The scan tool display the Brake Pedal Postion Sensor Reference Voltage
Lateral Acceleration		Varies	The scan tool displays 0–5 V depending on the vehicle's lateral acceleration.
Left Front Inlet Solenoid Valve Feedback		Inactive/Active	Active is displayed when the left front inlet solenoid valve is commanded ON.
Left Front Outlet Solenoid Valve Feedback		Inactive/Active	Active is displayed when the left front outlet solenoid valve is commanded ON.
Left Front Wheel Speed		0 km/h (0 MPH)	The scan tool displays km/h (MPH) depending on the current speed of the left front wheel speed sensor.
Left Front Brake Pressure		Varies	The scan tool displays the left front wheel pressure
Left Park Brake Actuator Force		Varies	The scan tool displays the Left Park Brake Actuator force
Left Park Brake Actuator Status		Released, Applied, Malfunction, Service Release, Releasing, Applying, Unknown	The scan tool displays the Left Park Brake Actuator Status
Left Park Brake Actuator Voltage		Varies	The scan tool displays the Left Park Brake Actuator voltage
Left Rear Brake Pressure		Varies	The scan tool displays the left rear wheel pressure
Left Rear Inlet Solenoid Valve Feedback		Inactive	The scan tool displays Inactive or Active. Active is displayed when the left rear inlet solenoid valve is commanded ON.
Left Rear Outlet Solenoid Valve Feedback		Inactive	The scan tool displays Inactive or Active. Active is displayed when the left rear outlet solenoid valve is commanded ON.
Left Rear Wheel Speed		0 km/h (0 MPH)	The scan tool displays km/h (MPH) depending on the current speed of the left rear wheel speed sensor.
Limited Brake Function - Only Limited Brake Pressure Available		Active/Inactive	The scan tool displays Partial Boost status
Limited Brake Function - Low Voltage Condition		Active/Inactive	The scan tool displays Low Voltage Boost Status
Limited Brake Function - Only One Brake Circuit Available		Active/Inactive	The scan tool displays half system boost status.
Longitudinal Acceleration		Varies	The scan tool displays the vehicle's longitudinal acceleration.
Manual Trailer Brake		Released/ Applied	Trailer Braking Signals Status Manual Trailer Brake Applied
Manual Trailer Brake Apply Request Signal 1		OK/Malfunction	Trailer Brake Primary Manual Apply Switch Position
Manual Trailer Brake Apply Request Signal 2		OK/Malfunction	Trailer Brake Redundant Manual Apply Switch Position
Module Temperature		Varies	The scan tool displays the Bake System Control Module Temperature.

Parameter	System State	Expected Value	Description
Normal Braking Mode		Active/Inactive	The scan tool displays if the vehicle is in normal braking mode.
Park Brake Actuator		Active/Inactive	The scan tool displays the Electric Park Brake Motor Status
Park Brake Actuator Direction		Released/ Applied	The scan tool displays the Electric Park Brake Motor Status
Panic Brake Assist Status		OK	The scan tool displays OK or Malfunction. Malfunction is displayed if the EBCM disables the panic brake assist due to a fault.
Park Brake Mode		Active/Inactive	The scan tool displays if in Shut Down Boost status
Park Brake Switch		Active/Inactive	The scan tool displays the status of the Electric Park Brake Switch
Pump Motor Relay Feedback		Inactive	The scan tool displays Inactive or Active. Active is displayed when the pump motor is commanded ON.
Primary Isolation Solenoid Valve Feedback		Inactive	The scan tool displays Inactive or Active. Active is displayed when the isolation solenoid valve is commanded ON.
Primary Prime Solenoid Valve Feedback		Inactive	The scan tool displays Inactive or Active. Active is displayed when the prime solenoid valve is commanded ON.
Rear Brake Pad Wear Sensors		Varies	The scan tool displays the remaining percentage of brake pad.
Redundant Trailer Brake Manual Apply Slider		Varies	The scan tool displays Manual Apply Switch Voltage.
Regenerative Braking Axle Torque Request		Varies	The scan tool displays Regenerative Braking Axle Torque Request
Regenerative Braking, Stability or Traction Control Disable History 1		Varies	The scan tool displays Regenerative Braking, Stability or Traction Control Disabling ECU History 1
Regenerative Braking, Stability or Traction Control Disable History 2		Varies	The scan tool displays Regenerative Braking, Stability or Traction Control Disabling ECU History 2
Regenerative Braking, Stability or Traction Control Disable History 3		Varies	The scan tool displays Regenerative Braking, Stability or Traction Control Disabling ECU History 3
Regenerative Braking, Stability or Traction Control Disable History 4		Varies	The scan tool displays Regenerative Braking, Stability or Traction Control Disabling ECU History 4
Regenerative Braking, Stability or Traction Control Disable History 5		Varies	The scan tool displays Regenerative Braking, Stability or Traction Control Disabling ECU History 5
Regenerative Braking, Stability or Traction Control Disable History 6		Varies	The scan tool displays Regenerative Braking, Stability or Traction Control Disabling ECU History 6
Regenerative Braking, Stability or Traction Control Disable History 7		Varies	The scan tool displays Regenerative Braking, Stability or Traction Control Disabling ECU History 7
Regenerative Braking, Stability or Traction Control Disable History 8		Varies	The scan tool displays Regenerative Braking, Stability or Traction Control Disabling ECU History 8
Regenerative Braking, Stability or Traction Control Disable History 9		Varies	The scan tool displays Regenerative Braking, Stability or Traction Control Disabling ECU History 9
Regenerative Braking, Stability or Traction Control Disable History 10		Varies	The scan tool displays Regenerative Braking, Stability or Traction Control Disabling ECU History 10
Requested Torque		Varies	The scan tool displays 0–100% depending on the how much torque is requested.
Right Front Brake Pressure		Varies	The scan tool displays the right front wheel pressure.
Right Front Inlet Solenoid Valve Feedback		Inactive	The scan tool displays Inactive or Active. Active is displayed when the right front inlet solenoid valve is commanded ON.

Parameter	System State	Expected Value	Description
Right Front Outlet Solenoid Valve Feedback		Inactive	The scan tool displays Inactive or Active. Active is displayed when the right front outlet solenoid valve is commanded ON.
Right Front Wheel Speed		0 km/h (0 MPH)	The scan tool displays km/h (MPH) depending on the current speed of the right front wheel speed sensor.
Right Park Brake Actuator Force		Varies	Scan tool displays the Right Park Brake Actuator force
Right Park Brake Actuator Status		Released, Applied, Malfunction, Service Release, Releasing, Applying, Unknown	Scan tool displays the Right Park Brake Actuator Status
Right Park Brake Actuator Voltage		Varies	Scan tool displays the Right Park Brake Actuator voltage
Right Rear Brake Pressure		Varies	The scan tool displays the right rear wheel pressure.
Right Rear Inlet Solenoid Valve Feedback		Inactive	The scan tool displays Inactive or Active. Active is displayed when the right rear inlet solenoid valve is commanded ON.
Right Rear Outlet Solenoid Valve Feedback		Inactive	The scan tool displays Inactive or Active. Active is displayed when the right rear outlet solenoid valve is commanded ON.
Right Rear Wheel Speed		0 km/h (0 MPH)	The scan tool displays km/h (MPH) depending on the current speed of the right rear wheel speed sensor.
Roller Test Stand Mode		Active/Inactive	The scan tool displays dyno mode status
Secondary Isolation Solenoid Valve Feedback		Active/Inactive	The scan tool displays Inactive or Active. Active is displayed when the isolation solenoid valve is commanded ON.
Secondary Prime Solenoid Valve Feedback		Active/Inactive	The scan tool displays Inactive or Active. Active is displayed when the prime solenoid valve is commanded ON.
Shutdown Mode		Active/Inactive	The scan tool displays if in shutdown mode
Stop Lamp Signal		Not Requested/ Requested	The scan tool displays Brake Lights Requested
Steering Wheel Angle	Steering wheel in straight position	−5 to +5°	The scan tool displays °. This is the current position of the steering angle sensor.
	Steering wheel turned left until stop	450–550°	
	Steering wheel turned right until stop	−550 to −450°	
System Voltage	—	11–14 V	The scan tool displays V. This is the current battery voltage.
Traction Control Switch	Traction control switch released	Inactive	The scan tool displays Inactive or Active depending on the traction control switch status.
	Traction control switch pressed	Active	
Traction Control System		OK	The scan tool displays OK or Malfunction. Malfunction is displayed if there is a traction control malfunction.

Parameter	System State	Expected Value	Description
Trailer Brake Automatic Control State		Normal, Active, Temporarily Limited, Permanently Failed, Communication Failed, Off, No Signal	Trailer Brake Autonomous Control Status Autonomous Control Feedback State
Trailer Brake Control		Disabled, Inactive, Normal Brake Mode, High Brake Mode, Manual Apply Brake Mode, Brake in Autonomous Mode, Undefined	The Scan tool displays Trailer Braking Arbitration State
Trailer Brake Control Output Circuit		Indeterminate, Voltage too High, Voltage too Low, Okay	The Scan tool displays Trailer Brake Control Output State
Trailer Brake Manual Apply Slider		Varies	The scan tool displays the trailer brake slider position as a percentage
Trailer Brake Power Control Module		De-Energized/ Energized	Trailer Brake Control Status Energized
Trailer Brake Power Control Module Battery Voltage		Varies	The scan tool displays Trailer Brake Power Control Module Battery Voltage.
Trailer Brake Sensitivity		Varies	The scan tool displays Trailer Brake User Gain
Trailer Brake Sensitivity Switch Up Button		Active/Inactive	The scan tool displays Trailer Brake Control Switch User Gain Button States
Trailer Brake Type		Unknown, Electrical, Electrohydraulic	The scan tool displays Trailer Connection Status
Vehicle Stability System		OK	The scan tool displays OK or Malfunction. Malfunction is displayed if there is a stability control malfunction.
Vehicle Stability Enhancement System Signal			
Vehicle Stability Enhancement System Switch	Traction control switch released	Inactive	The scan tool displays Inactive or Active depending on the traction control switch status.
	Traction control switch pressed	Active	
Wheel Speed Signal		Okay/ Malfunction	The scan tool displays Wheel Speed Signal Failure
Yaw Rate Signal		Varies	The scan tool displays 0–5 V depending on the vehicle's yaw rate.

Brake System Control Module Scan Tool Output Controls

Output Control	Description
Automated Brake Bleed	This is used in order to bleed ABS hydraulics.
Brake Hydraulics Test	This is used to check for leaks or air in the system.
Brake System Hydraulic Corner Test	Commands brake hydraulic pressure to each corner.
Deactivate Brake Boost System	This is used to deactivate brake boost system before performing certain functions.
Left Park Brake Actuator	Commands the left park brake actuator ON or OFF.
Right Park Brake Actuator	Commands the right park brake actuator ON or OFF.
Deactivate Rear Park Brake Service Position	Commands the caliper piston back into position after servicing the rear brakes,
Activate Rear Park Brake Service Position	Retracts the caliper piston to service the rear brakes.
Trailer Brake Control Signal	Commands the trailer brakes on and off
Trailer Brake Duty Cycle	Controls the battery output voltage to the trailer brakes.
Trailer Brake Switch Indicator	Conmands the Trailer Brake Switch Indicator on or off

K164 Differential Control Module: Scan Tool Information

Differential Control Module Scan Tool Data Parameters

Parameter	System State	Expected Value	Definition
Operating Conditions: Ignition is ON, engine OFF, vehicle stationary			
Axle Torque	Nm	Varies	The scan tool displays the Axle Torque.
Application Software Part Number 1	—	Varies	The scan tool displays Application Software Part Number 1.
Application Software Part Number 1 Alpha Code	—	Varies	The scan tool displays the Application Software Part Number 1 Alpha Code.
Base Model Part Number	—	Varies	The scan tool displays the base model part number of the module.
Base Model Part Number Alpha Code	—	Varies	The scan tool displays the Base Model Part Number Alpha Code.
Boot Software Part Number 1	—	Varies	The scan tool displays the Boot Software Part Number 1
Boot Software Part Number 1 Alpha Code	—	Varies	The scan tool displays the Boot Software Part Number 1 Alpha Code.
Calibration Part Number 1	—	Varies	The scan tool displays the Calibration Part Number 1.
Calibration Part Number 1 Alpha Code	—	Varies	The scan tool displays the Calibration Part Number 1 Alpha Code.
Clutch Wear	Degree	Varies	The scan tool displays the Clutch Wear.
Control Module Voltage	V	Varies	The scan tool displays the Control Module Voltage.
Control Module Voltage Signal	V	Varies	The scan tool displays the Control Module Signal Voltage.
Date Programmed	Julian Date	Varies	The scan tool displays the date the module was programed.
Delivered Torque	Nm	Varies	The scan tool displays the Delivered Torque (0–2047 Nm).
Delivered Torque	%	Varies	The scan tool displays the Delivered Torque (0–15 %).
Diagnostic Data Identifier	—	—	The scan tool displays XXXX.
End Model Part Number	—	Varies	The scan tool displays the End Model Part Number.

Parameter	System State	Expected Value	Definition
End Model Part Number Alpha Code	—	Varies	he scan tool displays the End Model Part Number Alpha Code.
Engine Off Time	Minutes	Varies	The scan tool displays the Engine Off Time.
Last Dealer Code or Scan Tool Serial Number	—	Varies	The scan tool displays the Last Dealer Code or Scan Tool Serial Number.
Left Rear Wheel Speed	rps	Varies	The scan tool displays 0-16383 rev/s.
Manufacturer Enable Counter	—	Varies	The scan tool displays the Manufacturer Enable Counter.
Manufacturer's Traceability Number	—	Varies	The scan tool displays the Manufacturer Enable Counter.
Module Diagnostic Address	—	Varies	The scan tool displays the Module Diagnostic Address.
Module Temperature	Nm	Varies	The scan tool displays the Left Rear Differential Clutch Requested Torque.
Number of Application Software Part Numbers	—	Varies	The scan tool displays the Number of Application Software Part Numbers.
Number of Boot Software Part Numbers	—	Varies	The scan tool displays the Number of Boot Software Part Numbers.
Number of Calibration Part Numbers	—	Varies	The scan tool displays the Number of Calibration Part Numbers.
Power Mode			
Propulsion System Status	Active, Inactive	Active	The scan tool displays the Propulsion System Status.
Rear Axle Motor Temperature	°C (°F)	Varies	The scan tool displays the Rear Axle Motor Temperature.
Rear Differential Clutch Brake Actuator Command	Engaged/ Disengaged	Engaged	The scan tool displays the Rear Differential Clutch Brake Actuator Command.
Rear Differential Clutch Brake Actuator Status	Disengaged, Engaged, Fault	Disengaged	The scan tool displays the Rear Differential Clutch Brake Actuator Status.
Rear Differential Clutch Learn Status	Routine Inactive in this Ignition Cycle, Routine Active, Routine Passed, Routine Failed Error Occurred, Routine Failed Temperature out of Range, Routine Failed Vehicle Speed to High, Invalid Input Value, Routine Failed other Constraints, Routine Already Active, Routine Stopped	Routine Inactive in this Ignition Cycle	The scan tool displays the Rear Differential Clutch Learn Status.
Rear Differential Clutch Motor Current	Ampere	Varies	The scan tool displays the Desired Rear Differential Clutch Motor Current.
Rear Differential Clutch Motor Current	Ampere	Varies	The scan tool displays the Actual Rear Differential Clutch Motor Current.
Rear Differential Clutch Motor Current Command	Ampere	Varies	The scan tool displays the Rear Differential Clutch Motor Current Command.
Rear Differential Clutch Motor Position	Degree	Varies	The scan tool displays the Rear Differential Clutch Motor Position.

Parameter	System State	Expected Value	Definition
Rear Differential Clutch Motor Position Command	Degree	Varies	The scan tool displays the Rear Differential Clutch Motor Position Command.
Rear Differential Clutch Status	Normal, Temporarily Disabled, Temporarily Limited, Permanently Failed	Temporarily Limited	The scan tool displays Normal/Temporarily Disabled/ Temporarily Limited/Permanently Failed.
Rear Differential Clutch Temperature	°C (°F)	Varies	The scan tool displays the Rear Differential Clutch Temperature.
Rear Differential Functional Test Status	Routine Inactive in this Ignition Cycle, Routine Active, Routine Passed, Routine Failed Error Occurred, Routine Failed Temperature out of Range, Routine Failed Vehicle Speed to High, Invalid Input Value, Routine Failed other Constraints, Routine Already Active, Routine Stopped	Varies	The scan tool displays the Rear Differential Functional Test Status.
Rear Differential Oil Temperature	°C (°F)	Varies	The scan tool displays the Rear Differential Oil Temperature.
Rear Differential Successful Clutch Learns	—	Varies	The scan tool displays the Rear Differential Successful Clutch Learns.
Rear Differential Thermal Capacity Used	%	Temporarily Limited	The scan tool displays Rear Differential Thermal Capacity Used.
Rear Drive Clutch Estimated Torque	Nm	Varies	The scan tool displays the Rear Drive Clutch Estimated Torque.
Rear Drive Clutch Oil Temperature	°C (°F)	Varies	The scan tool displays the Rear Drive Clutch Oil Temperature.
Rear Drive Clutch Torque Command	Nm	Varies	The scan tool displays the Rear Drive Clutch Torque Command.
Right Rear Wheel Speed	RPS	Varies	The scan tool displays 0-16383 rev/s.
Vehicle Identification Number (VIN)	—	Varies	The scan tool displays the Vehicle Identification Number.

Rear Differential Clutch Control Module Scan Tool Output Controls

Output Control	Description
Rear Differential Clutch Learn Command	This function will begin the Rear Differential Clutch Learn routine.
Rear Differential Functional Test Command	This function will begin the Rear Differential Functional Test routine.
Rear Differential Clutch Motor Current Command	This function allows the technician to control motor using current when requested.

K180 Driver Monitoring System Control Module: Scan Tool Information

Note: Due to software and hardware variations, not all information may be applicable.

K180 Driver Monitoring System Control Module Scan Tool Data Parameters

Parameter	System State	Expected Value	Description
Operating Conditions: Ignition ON			
Vehicle Identification Number (VIN)	—	Varies	The scan tool displays the learned VIN
End Model Part Number	—	Varies	End Model Part Number is the part number for the hardware of the control module with software and calibrations.
Base Model Part Number	—	Varies	Base Model Part Number is the part number for the hardware without software and calibrations.
Manufacturer’s Traceability Number	—	Varies	
Diagnostic Data Identifier	—	Varies	The scan tool displays the 4 character alphanumeric device ID.
Manufacturer Enable Counter	—	Varies	
Boot Software Part Number 1 Alpha Code	—	Varies	
Application Software Part Number 1 Alpha Code	—	Varies	
Calibration Part Number 1	—	Varies	

K182 Parking Assist Control Module: Scan Tool Information

Note: Due to software and hardware variations, not all information may be applicable.

Parking Assist Control Module Scan Tool Data Parameters – Identification Information

Parameter	System State	Expected Value	Description
Operating Conditions: Ignition ON/Engine OFF/Parking Assist ON			
Vehicle Identification Number (VIN)	—	Varies	The scan tool displays the Vehicle Identification Number
Diagnostic Data Identifier	—	Varies	The scan tool displays the Diagnostic Data Identifier
XML Configuration Compatibility Identifier	—	Varies	The scan tool displays the XML Configuration Compatibility Identifier
XML Data File Part Number	—	Varies	The scan tool displays the XML Data File Part Number
XML Data File Alpha Code	—	Varies	The scan tool displays the XML Data File Alpha Code
Module Diagnostic Address	—	Varies	The scan tool displays the Module Diagnostic Address
Manufacturer's Traceability Number	—	Varies	The scan tool displays the Manufacturer's Traceability Number
Software Part Number	—	Varies	The scan tool displays the Software Part Number
Calibration Part Number 2	—	Varies	The scan tool displays the Calibration Part Number 2
End Model Part Number	—	Varies	The scan tool displays the End Model Part Number
Base Model Part Number	—	Varies	The scan tool displays the Base Model Part Number

Parameter	System State	Expected Value	Description
Software Module 1 Identifier Alpha Code	—	Varies	The scan tool displays the Software Module 1 Identifier Alpha Code
End Model Part Number Alpha Code	—	Varies	The scan tool displays the End Model Part Number Alpha Code
Base Model Part Number Alpha Code	—	Varies	The scan tool displays the Base Model Part Number Alpha Code
GMLAN Identification Data - Bus 1 Type	—	Varies	The scan tool displays the GMLAN Identification Data - Bus 1 Type
GMLAN Identification Data - Data Dictionary 1 Version	—	Varies	The scan tool displays the GMLAN Identification Data - Data Dictionary 1 Version
GMLAN Identification Data - GMLAN Kernel 1 Version	—	Varies	The scan tool displays the GMLAN Identification Data - GMLAN Kernel 1 Version
Date Programmed	—	Varies	The scan tool displays the date the module was programmed

Parking Assist Control Module Scan Tool Data Parameters – Park Assist System Data

Parameter	System State	Expected Value	Description
Operating Conditions: Ignition ON/Engine OFF/Parking Assist ON			
Power Mode	—	Run	The scan tool displays Off, Accessory, Run or Crank. This is the state of the ignition switch.
Battery Voltage	—	11–14 V	The scan tool displays V. This is the current battery voltage.
Parking Assist System Status	—	Enable	The scan tool displays Disable, Enable, Inhibited or Failed. This is the state of the parking assist system.
Parking Assist Chime	—	Varies	The scan tool displays On or Off. On is displayed if there is an object within the measuring range of the object sensors.
Parking Assist Sensors	—	ON	The scan tool displays On or Off.
Calculated Transmission Range	Transmission in reverse	Park	The scan tool displays Park, Reverse, Neutral, Drive or Unknown depending on the state of the commanded gear.
Parking Assist Switch	—	Active/Inactive	The scan tool displays Active or Inactive depending on the state of the parking assist switch.
Advanced Parking Assist Switch	—	Active/Inactive	The scan tool displays Active or Inactive depending on the state of the advanced parking assist switch.
Parking Assist Sensors Reference Voltage	—	7.3–12.1 V	The scan tool displays V. This is the amount of voltage being sent to the object sensors.
Parking Assist Switch LED	—	Varies	The scan tool displays On or Off depending on the state of the parking assist switch LED.
Right Side Object Detection Indicator	—	Varies	The scan tool displays a blank, On or Off depending on the state of the right side object detection indicator command status.
Left Side Object Detection Indicator	—	Varies	The scan tool displays a blank, On or Off depending on the state of the left side object detection indicator command status.
Advanced Parking Assist Status	—	Standby	The scan tool displays Standby, Active, or Inactive depending on the state of the advanced parking assist.

Parking Assist Control Module Scan Tool Data Parameters – Parking Assist Sensor Data

Parameter	System State	Expected Value	Description
Operating Conditions: Ignition ON/Engine OFF/Parking Assist ON			
Parking Assist Sensors	—	ON	The scan tool displays On or Off.
Parking Assist Sensors Reference Voltage	—	7.3–12.1 V	The scan tool displays V. This is the voltage being sent to the object sensors.
Left Front Advanced Parking Assist Side Object Sensor	—	32767 mm	The scan tool displays mm. This is the distance between the parking assist sensor and the nearest object.
Left Front Outer Object Sensor Distance to Object	—	32767 mm	The scan tool displays mm. This is the distance between the parking assist sensor and the nearest object.
Left Front Inner Object Sensor Distance to Object	—	32767 mm	The scan tool displays mm. This is the distance between the parking assist sensor and the nearest object.
Right Front Advanced Parking Assist Side Object Sensor	—	32767 mm	The scan tool displays mm. This is the distance between the parking assist sensor and the nearest object.
Right Front Outer Object Sensor Distance to Object	—	32767 mm	The scan tool displays mm. This is the distance between the parking assist sensor and the nearest object.
Right Front Inner Object Sensor Distance to Object	—	32767 mm	The scan tool displays mm. This is the distance between the parking assist sensor and the nearest object.
Left Rear Advanced Parking Assist Side Object Sensor	—	32767 mm	The scan tool displays mm. This is the distance between the parking assist sensor and the nearest object.
Left Rear Outer Object Sensor Distance to Object	—	32767 mm	The scan tool displays mm. This is the distance between the parking assist sensor and the nearest object.
Left Rear Inner Object Sensor Distance to Object	—	32767 mm	The scan tool displays mm. This is the distance between the parking assist sensor and the nearest object.
Right Rear Advanced Parking Assist Side Object Sensor	—	32767 mm	The scan tool displays mm. This is the distance between the parking assist sensor and the nearest object.
Right Rear Outer Object Sensor Distance to Object	—	32767 mm	The scan tool displays mm. This is the distance between the parking assist sensor and the nearest object.
Right Rear Inner Object Sensor Distance to Object	—	32767 mm	The scan tool displays mm. This is the distance between the parking assist sensor and the nearest object.

Parking Assist Control Module Scan Tool Data Parameters – Parking Assist Disable History 1–4 Data

Parameter	System State	Expected Value	Description
Operating Conditions: Ignition ON/Engine OFF/Parking Assist ON			
Parking Assist Disable History 1	—	Varies	The scan tool displays None, Manual Disable, Park Brake Applied, Trailer or Other Attached Object, Excessive Speed in Reverse, No or Invalid Sensor Signals, Sensor Disturbance, Sensors Dirty, Sound Signal Return Time Not Plausible. This is the state of the park assist disable history.

Parameter	System State	Expected Value	Description
Parking Assist Disable History 2	—	Varies	The scan tool displays None, Manual Disable, Park Brake Applied, Trailer or Other Attached Object, Excessive Speed in Reverse, No or Invalid Sensor Signals, Sensor Disturbance, Sensors Dirty, Sound Signal Return Time Not Plausible. This is the state of the park assist disable history.
Parking Assist Disable History 3	—	Varies	The scan tool displays None, Manual Disable, Park Brake Applied, Trailer or Other Attached Object, Excessive Speed in Reverse, No or Invalid Sensor Signals, Sensor Disturbance, Sensors Dirty, Sound Signal Return Time Not Plausible. This is the state of the park assist disable history.
Parking Assist Disable History 4	—	Varies	The scan tool displays None, Manual Disable, Park Brake Applied, Trailer or Other Attached Object, Excessive Speed in Reverse, No or Invalid Sensor Signals, Sensor Disturbance, Sensors Dirty, Sound Signal Return Time Not Plausible. This is the state of the park assist disable history.

Parking Assist Control Module Scan Tool Data Parameters – Parking Assist Disable History 5–7 Data

Parameter	System State	Expected Value	Description
Operating Conditions: Ignition ON/Engine OFF/Parking Assist ON			
Parking Assist Disable History 5	—	Varies	The scan tool displays None, Manual Disable, Park Brake Applied, Trailer or Other Attached Object, Excessive Speed in Reverse, No or Invalid Sensor Signals, Sensor Disturbance, Sensors Dirty, Sound Signal Return Time Not Plausible. This is the state of the park assist disable history.
Parking Assist Disable History 6	—	Varies	The scan tool displays None, Manual Disable, Park Brake Applied, Trailer or Other Attached Object, Excessive Speed in Reverse, No or Invalid Sensor Signals, Sensor Disturbance, Sensors Dirty, Sound Signal Return Time Not Plausible. This is the state of the park assist disable history.
Parking Assist Disable History 7	—	Varies	The scan tool displays None, Manual Disable, Park Brake Applied, Trailer or Other Attached Object, Excessive Speed in Reverse, No or Invalid Sensor Signals, Sensor Disturbance, Sensors Dirty, Sound Signal Return Time Not Plausible. This is the state of the park assist disable history.

Parking Assist Control Module Scan Tool Output Controls

Output Control	Description
Park Assist Switch LED	The parking assist control module illuminates the advanced park assist LED of the when commanded from the scan tool.
Clear Disable History Data	The parking assist control module clears the Parking Assist Disable History data when commanded from the scan tool.
Clear Side Object Detection Disable History	The parking assist control module clears the Side Object Detection Disable History data when commanded from the scan tool.
CAN Bus Configuration Learn	The parking assist control module learns the CAN Bus configuration when commanded from the scan tool.
Parking Assist Sensor Learn	The parking assist control module learns the Parking Assist Sensor configuration when commanded from the scan tool.

K183 UHF Short Range Low Energy Remote Control Access Transceiver: Scan Tool Information

K183 UHF Short Range Low Energy Remote Control Access Transceiver Scan Tool Data Parameters

Parameter	Expected Value	Definition
Operating Conditions: Ignition ON		
Mobile Device Presence in Short Range Zone	Yes/No	Detecting the presence of the mobile device within a short range zone around the vehicle where the mobile device would be be able to interact with your vehicle to activate welcome lights of the vehicle with HIGH probability of success.
Mobile Device Left Entry Allowed	Yes/No	Indicates if you can enter the vehicle from any door located on the left side by using your mobile device.
Mobile Device Right Entry Allowed	Yes/No	Indicates if you can enter the vehicle from any door located on the right side by using your mobile device.
Mobile Device Front Entry Allowed	Yes/No	Indicates if you have an access to frunk of the vehicle by using your mobile device.
Mobile Device Rear Entry Allowed	Yes/No	Indicates if you have an access to rear closure of the vehicle by using your mobile device.
Mobile Device Left Side Count	Counts	Indicates the numbers of mobile devices detected in the LEFT side of the vehicle.
Mobile Device Right Side Count	Counts	Indicates the numbers of mobile devices detected in the RIGHT side of the vehicle.
Mobile Device Interior Count	Counts	Indicates the numbers of mobile devices detected INSIDE the vehicle.
Mobile Device Front Compartment Count	Counts	Indicates the numbers of mobile devices detected inside frunk of the vehicle.
Mobile Device Rear Compartment Count	Counts	Indicates the numbers of mobile devices detected inside rear closure/ trunk of the vehicle.
Mobile Device Rear Side Count	Counts	Indicates the numbers of mobile devices detected in the REAR side of the vehicle.
Mobile Device Front Side Count	Counts	Indicates the numbers of mobile devices detected in the FRONT side of the vehicle.
Mobile Device Short Range Zone Count	Counts	Indicates the numbers of mobile devices detected in welcome zone of the vehicle. Welcome zone is approximately 10ft (3m) embrace area around the vehicle where the mobile device can interact with the vehicle to activate welcome lights of the vehicle with HIGH density of detection.
Mobile Device Connected Count	Counts	Indicates number of mobile devices connected to the vehicle.
Mobile Device Status	[0] Unpaired - Learn Mode Inactive [1] Pairing - Learning [2] Paired - Learned [3] Blocked - Learn Failed or Not Learned	Indicates the status of the vehicle virtual key state.
Mobile Device Interior Count with Starting Access	Counts	Indicates the number of mobile devices inside the vehicle with access to start the vehicle.
Mobile Device 1 Bluetooth Ranging Session	Active/Inactive	This parameter indicates if the system is currently searching for the mobile device using bluetooth.
Mobile Device 2 Bluetooth Ranging Session	Active/Inactive	This parameter indicates if the system is currently searching for the mobile device using bluetooth.
Mobile Device 3 Bluetooth Ranging Session	Active/Inactive	This parameter indicates if the system is currently searching for the mobile device using bluetooth.
Mobile Device 4 Bluetooth Ranging Session	Active/Inactive	This parameter indicates if the system is currently searching for the mobile device using bluetooth.
Mobile Device 5 Bluetooth Ranging Session	Active/Inactive	This parameter indicates if the system is currently searching for the mobile device using bluetooth.

Parameter	Expected Value	Definition
Mobile Device 6 Bluetooth Ranging Session	Active/Inactive	This parameter indicates if the system is currently searching for the mobile device using bluetooth.
Mobile Device Interior Count with Entry Access	Counts	Indicates the number of mobile devices key fobs detected inside the vehicle you can use to enter the vehicle.
Total Valid Stored Mobile Devices	Counts	Indicates the total number of stored mobile devices up to 32 mobile devices.

K194 Rear Gate Module: Scan Tool Information

Rear Gate Module Scan Tool Data Parameters

Parameter	System State	Expected Value	Definition
Operating Conditions: Vehicle Power Mode » Run/Service Mode.			
Rear Gate Latch Neutral Switch Stuck	—	No	This displays Yes if the rear gate neutral switch is active while other liftgate latches are inactive
Rear Gate Latch Primary Switch Stuck	—	No	This displays Yes if the rear gate primary switch is active while other liftgate latches are inactive
Rear Gate Latch Unlatch Switch Stuck	—	No	This displays Yes if the rear gate unlatch switch is active while other liftgate latches are inactive
Rear Gate Latch Neutral Switch Signal	—	Valid	This displays Invalid if the rear gate neutral switch is inactive while other liftgate latches are active
Rear Gate Latch Primary Switch Signal	—	Valid	This displays Invalid if the rear gate primary switch is inactive while other liftgate latches are active
Rear Gate Latch Unlatch Switch Signal	—	Valid	This displays Invalid if the rear gate unlatch switch is inactive while other liftgate latches are active
Rear Gate Ajar	—	Closed/Ajar	This will display the state of the liftgate
Rear Gate Latch Unlatch Switch	—	Inactive	The scan tool displays Inactive or Active. This is the state of the latch unlatch switch depending upon if the liftgate is in the open position or closed position
Rear Gate Latch Primary Switch	—	Inactive	The scan tool displays Inactive or Active. This is the state of the latch primary switch depending upon if the liftgate is in the open position or closed position
Rear Gate Latch Neutral Switch	—	Inactive	The scan tool displays Inactive and will briefly display Activate as the liftgate latch releases or cinches.
Rear Gate Anti-pinch Sensor Voltage Raw Value	—	3.7v	The scan tool displays the actual voltage on the liftgate object sensors circuit as measured by the rear gate module.
Rear Gate Pinch Sensor Active	—	Inactive	This parameter will change from Inactive to Active when the rear gate pinch sensor is pressed
Rear Gate Travel	—	Less than 5%–greater than 80%	This parameter will change from less than 5% when the liftgate is in the close position to greater than 80% when the liftgate is in the open position
Rear Gate Max Height Learned	—	Learned	This displays Yes if the maximum height has been programmed

K299R Audio/Video Interface Rear Module: Scan Tool Information

Audio/Video Interface Rear Module Scan Tool Data Parameters

Parameter	Expected Value	Definition
Operating Conditions: Ignition ON		
Vehicle Power Mode	Enumeration	0=Off, 1=Accessory, 2=Run, 3=Start/Request, 4=Propulsion

Parameter	Expected Value	Definition
Vehicle Power Mode Invalidity	True or False	The scan tool displays an invalid power mode.
Diagnostic Data Identifier	Unsigned Numeric	Identifies a supplier and system specific data stream used by diagnostic testers to interpret a diagnostic data stream.
Manufacture's Traceability Characters	Varies	The scan tool displays the Manufacture's Traceability Characters.
ECU ID	Varies	The scan tool displays the ECU ID.
Application Software Identification Data Identifier	Varies	The scan tool displays the Application Software Identification Data Identifier.
Vehicle Identification Number	Varies	The scan tool displays the vehicle identification number.
Repair Shop Code or Tester Serial Number	Varies	The scan tool displays the Repair Shop Code or Tester Serial Number.
Programming Date	Varies	The scan tool displays the date the module was programmed.
Manufacturers Enable Counter	Varies	The scan tool displays the Manufacturers Enable Counter.
ECU Diagnostic Address	Varies	The scan tool displays the ECU Diagnostic Address.
GM End Model Part Number	Varies	The scan tool displays the GM End Model Part Number.
GM Base Model Part Number	Varies	The scan tool displays the GM Base Model Part Number.
GM Base Model Part Number Alpha Code	Varies	The scan tool displays the GM Base Model Part Number Alpha Code.
GM End Model Part Number Alpha Code	Varies	The scan tool displays the GM End Model Part Number Alpha Code.

P16 Instrument Panel Cluster Control Module: Scan Tool Information

Instrument Cluster Scan Tool Data Parameters

Parameter	Expected Value	Description
Operating Conditions: Ignition ON		
Battery Voltage	12–14 V	The scan tool displays Volts. This is the current battery voltage signal.
Key in Ignition Status	Active/Inactive	The scan tool displays Active or Inactive. This is the state of the key in ignition switch.
Driver Information Center Switch	Varies	The scan tool displays Volts. This is the current driver information center switch input voltage.
Driver Information Center Switch	Inactive	The scan tool displays either Inactive, Up, Down, or Menu. This is the state of the driver information center switch.
Reset Switch	Active/Inactive	The scan tool displays Active or Inactive. This is the state of the reset switch.
Ambient Air Temperature	15°C	The scan tool displays outside temperature in °C.
Washer Fluid Level Switch	Open	The scan tool displays either Open, Closed, or Not Available.
Odometer Lock Status	Active/Inactive	The scan tool displays Active or Inactive depending on the state of the odometer.
Engine Speed	0 RPM	The scan tool displays the filtered value of engine speed.
Vehicle Speed	0 km/h	The scan tool displays the filtered vehicle speed value.
Fuel Level Sensor	—	The scan tool displays the filtered value of the fuel level.
Engine Coolant Temperature	—	The scan tool displays the filtered value of the engine coolant temperature.
Engine Oil Pressure	—	The scan tool displays the filtered value of the engine oil pressure.
Head-Up Display Dimming Level	percentage	The scan tool displays the current dimming intensity level.

Parameter	Expected Value	Description
Head-Up Display Switch	Head-Up Display Movement, Head Up Page Switch, Head-Up Display Dimming Level	The scan tool displays the current HUD button being pushed.
Steering Wheel Control Switches	Left, Select, Right , Volume UP, Volume Down	The scan tool displays the current steering wheel controls button being pushed.

Instrument Cluster Scan Tool Output Controls

Output Control	Description
Instrument Cluster Gauge Sweep	This function is used to command the gauges to sweep from minimum to maximum.
Driver Information Center Dimming	This function is used to command the dimming of the driver information display to Increase or Decrease by 10%.
Instrument Panel Dimmer Switch	This function is used to command the dimming of the instrument cluster to Increase or Decrease by 10%.
Driver Information Center Segments	This function is used to command the driver information center segments ON and OFF.
All Indicators	This function is used to command all the indicators ON or OFF.
Driver Information Center Options	This function is used to command the driver information center buttons using the scan tool.
CAN Bus Configuration Learn	This function is used to Reset the source ID for low speed CAN Bus communications.
Head Up Display Dimming Level	This function is used to command the dimming of the head up display to Increase or Decrease.
Head Up Display Pattern Check	This function is used to command the head up display to display a striped test pattern.

T3 Audio Amplifier: Scan Tool Information

Amplifier Scan Tool Data Parameters

Parameter	Expected Value	Definition
Operating Conditions: Ignition ON		
Power Mode	Off ACC Crank Run	The scan tool displays Off, Accessory, Run or Crank Request. This is the vehicle power mode status as received via serial data.
Active Noise Cancellation	On Off	The scan tool displays On or Off. This indicates if the Active Noise Cancellation feature is available and capable of operating.
Engine Sound Enhancement	On Off	The scan tool displays On or Off. This is the status of the engine sound enhancement function.
Battery Voltage	Varies	The scan tool displays volts. This is the voltage at the input to the amplifier.
Vehicle Speed	0 km/h	The scan tool displays the vehicle speed received by the amplifier in km/h or mph.
Engine Speed	0 RPM	The scan tool displays the current engine speed received by the amplifier in RPM .
Calculated System Temperature	Varies	The scan tool displays the calculated temperature of the amplifier in °C or °F.
Microphone Status	Normal	The scan tool displays Normal, Clipped, or Malfunction.
Microphone 1 Input Level	Varies	The scan tool displays counts from 0 to 65,535. This is the sound level currently being received by the microphone 1, with higher numbers indicating louder sounds.

Parameter	Expected Value	Definition
Microphone 2 Input Level	Varies	The scan tool displays counts from 0 to 65,535. This is the sound level currently being received by the microphone 2, with higher numbers indicating louder sounds.
Microphone 3 Input Level	Varies	The scan tool displays counts from 0 to 65,535. This is the sound level currently being received by the microphone 3, with higher numbers indicating louder sounds.
Door Status	Varies	The scan tool displays All Closed or One or More Open. This is the current status of the vehicle access door latches as received via serial data.

T22 Wireless Accessory Charging Module: Scan Tool Information

The T22 Wireless Accessory Charging Module scan tool data parameters list contains all automatic level control related parameters that are available on the scan tool. The list is arranged in alphabetical order. A given parameter may appear in any one of the data lists.

Wireless Accessory Charging Module Scan Tool Data Parameters

Parameter	System State	Expected Value	Description (Range)
Operating Conditions: Ignition ON			
Alignment Status	—	Varies	The scan tool displays the current condition of Radar Alignment.
Charging Current Level	—	Varies	The scan tool displays the state or energy level of charging device being energized by inductive charging coil located under the cup holder (None, Low, Medium, High).
Charging Current Value	—	Varies	The scan tool displays the current in mA being energized by inductive charging coil located under cup holder (0–1000mA).
Wireless Charging Disable History - 1	—	Varies	Indicates why the wireless charging system was disabled.
Wireless Charging Disable History - 2	—	Varies	Indicates why the wireless charging system was disabled.
Wireless Charging Disable History - 3	—	Varies	Indicates why the wireless charging system was disabled.
Wireless Charging Disable History - 4	—	Varies	Indicates why the wireless charging system was disabled.
Wireless Charging Disable History - 5	—	Varies	Indicates why the wireless charging system was disabled.
Wireless Charging Disable History - 6	—	Varies	Indicates why the wireless charging system was disabled.
Wireless Charging Disable History - 7	—	Varies	Indicates why the wireless charging system was disabled.
Wireless Charging Disable History - 8	—	Varies	Indicates why the wireless charging system was disabled.

K111 Fuel Pump Power Control Module Scan Tool Information

Refer to: *K20 Engine Control Module: Scan Tool Information 2-127* *K20 Engine Control Module: Scan Tool Information 2-160*.

Diagnostic Information and Procedures

Strategy Based Diagnosis

The goal of Strategy Based Diagnosis is to provide guidance when you create a plan of action for each specific diagnostic situation. Following a similar plan for each diagnostic situation, you will achieve maximum efficiency when you diagnose and repair vehicles. Although each of the Strategy Based Diagnosis steps

are numbered, you are not required to complete every step in order to successfully diagnose a customer concern. The first step of your diagnostic process should always be Understand and Verify the Customer's Concern. The final step of your diagnostic process should be to Repair and verify the Fix. Refer to the steps listed below for the correct Strategy Based Diagnosis.

Note: For additional information on the following steps refer to the corresponding numbered paragraphs listed below.

1. Understand and verify the customers concern.
2. Verify the vehicle is not operating as designed:

⇒ **If the vehicle is operating as designed review the suggestions listed below:**

- Check Identical Vehicle
- Customer Misunderstanding of System – Explain operation to customer or refer to owners or service manual
- Customer dissatisfaction – Submit a Field Product Report

⇓ **If the vehicle is not operating as designed**

3. Perform preliminary checks – Visual inspections and operational

⇒ **If the customers concern is found, refer to step 5**

⇓ **If the customers concern is not found**

4. Perform the Diagnostic System Check – Vehicle, determine the diagnostic service category to perform.

⇒ **If the customers concern is found, refer to step 5**

⇓ **If the customers concern is not found**

5. Check for related Bulletins, Recalls and Preliminary Information.

⇒ **If the customers concern is found, refer to step 7**

⇓ **If the customers concern is not found**

6. Follow the diagnostic path listed below:
   - 6.1. Current DTC – Follow DTC Diagnostics
   - 6.2. Symptom no DTC – Follow Symptom Diagnostics
   - 6.3. No published diagnostic – Analyze and develop diagnostics or call Technical Assistance
   - 6.4. Intermittent/History DTC – See diagnostic detail below
7. Isolate the root cause then repair and verify the fix.
8. Re-examine the concern.

⇒ **If the vehicle is not repaired, refer to step 1**

⇓ **If the vehicle is repaired**

9. All OK.

Additional Information

1. Understand and Verify the Customer's Concern: The first part of this step is to obtain as much information as possible from the customer. Are there aftermarket accessories on the vehicle? When does the condition occur? Where does the condition occur? How long does the condition last? How often does the condition occur? In order to verify the concern, the technician should be familiar with the normal operation of the system and refer to the owner or service manual for any information needed.
2. Vehicle Operating as Designed: This condition exists when the vehicle is found to operate normally. The condition described by the customer may be normal. Compare with another like vehicle that is operating normally under the same conditions described by the customer. Explain your findings and the operation of the system to the customer. If the customer is dissatisfied submit a Field Product Report.
3. Preliminary Checks: Conduct a thorough visual inspection. Review the service history. Detect unusual sounds or odors. Gather diagnostic trouble code (DTC) information in order to achieve an effective repair.
4. Perform Published Diagnostic System Check-Vehicle: The *Diagnostic System Check - Vehicle 2-296* verifies the proper operation of the system. This will lead the technician in an organized approach to diagnostics and identify what category of diagnostic to perform.
5. Check for related Bulletins, Recalls and Preliminary Information (PI).
6. Diagnostic categories:
   - 6.1. Current DTC: Follow the designated DTC diagnostic in order to make an effective repair. Refer to *Diagnostic Trouble Code (DTC) List - Vehicle 2-301*.
   - 6.2. Symptom - No DTC: Select the appropriate symptom diagnostic. Follow the diagnostic steps or suggestions in order to complete the repair. Refer to *Symptoms - Vehicle 2-374*.
   - 6.3. No Published Diagnostics: Analyze the Concern. Develop a plan for the diagnostics. The service manual schematics will help you to see system power, ground, input, and output circuits. You can also identify splices and other areas where multiple circuits are tied together. Look at component locations

to see if components, connectors or harnesses may be exposed to extreme temperature, moisture, or corrosives (road salt, battery acid, oil or other fluids). Utilize the wiring diagrams, system description and operation, and system circuit description.

6.4. Intermittent/History DTC: An intermittent condition is one that does not occur continuously, may be difficult to duplicate, and will only occur when certain conditions are met. Generally, an intermittent is caused by faulty electrical connections and wiring, malfunctioning components, electromagnetic/radio frequency interference, driving conditions, or aftermarket equipment. The following approaches/tools may prove to be beneficial in locating and repairing an intermittent condition or history DTC.

- Combining technicians knowledge with the available service information.
- Evaluate the symptoms and conditions described by the customer.

  North America – The GM Customer Concern Verification Sheets have been designed to improve communications between the service customer and the technician. The more clearly the technician understands the concern and its symptoms, the more likely the concern will be fixed right the first time. The blank CCVS can be found in GM Global Connect under Service, Service Forms.
- Follow the suggestions on [Link target (target-id 62112-) not found] .
- Use a tool with data capturing capabilities like scan tool, digital multi-meter, or (if available) a vehicle data recorder.

7. Isolate the Root Cause then Repair and Verify Fix: After isolating the root cause, make the repairs and validate for the correct operation by performing the *Diagnostic Repair Verification 2-375*. Verifying that the DTC or symptom has been corrected may involve road testing the vehicle.
8. Re-examine the Concern: If a technician cannot successfully find or isolate the concern, a re-evaluation is necessary. Re-verify the concern. The concern could be an intermittent or normal condition.

Diagnostic Procedure Instructions

The following is an instructional overview of all categories which may be included in a diagnostic procedure.

Diagnostic Instructions

- A link to the *Diagnostic System Check - Vehicle 2-296* is provided here. This procedure should be performed prior to performing other diagnostic procedures, as this prevents misdiagnosis where there are integrated system dependencies.
- A link to the *Strategy Based Diagnosis 2-286* is provided here. This provides an overview on how a technician should diagnose a vehicle.
- A link to the *Diagnostic Procedure Instructions 2-288* is provided here. This information is an instructional overview of all categories which may be included in a diagnostic procedure.

DTC Descriptor

Lists all DTCs and descriptors that are diagnosed within the procedure.

If the DTC supports symptom bytes they will either be listed with the DTC or there will be a link to the symptom byte list.

Diagnostic Fault Information

The Diagnostic Fault Information table identifies each circuit that makes up an electrical subsystem and the associated circuit faults. DTCs and symptoms are listed in the table for all circuit fault modes. This information can be used to diagnose an electrical fault, or as a quick visual aid showing how the different DTCs and symptoms apply for the subsystem being diagnosed.

All DTCs and symptoms shown in this table are not necessarily diagnosed during this procedure.

An example table from an engine coolant temperature (ECT) procedure:

Circuit	Short to Ground	Open/High Resistance	Short to Voltage	Signal Performance
Signal	P0117	P0118, P0119	P0118*, P0119	P0128, P111E
Low Reference	—	P0118, P0119	—	P0128
* Internal control module or component damage may occur if the circuit shorts to B+.				

Typical Scan Tool Data

The Typical Scan Tool Data table identifies a scan tool data parameter and its value in reference to potential circuit faults.

An example table from an ECT procedure:

ECT Sensor

Circuit	Short to Ground	Open	Short to Voltage
Operating Conditions: Engine = Idling— At normal operating temperature. **Parameter Normal Range:** 88 to 105°C (190 to 221°F)			
Signal	140°C (248°F)	−40°C (−40°F)	−40°C (−40°F)
Low Reference	—	−40°C (−40°F)	—

Circuit/System Description

Circuit/System Description identifies circuits, components, and describes how the circuit/system normally functions.

Conditions for Running the DTC

Conditions for Running the DTC, identifies what conditions must be present to allow the diagnostic to run.

Conditions for Setting the DTC

Conditions for Setting the DTC, identifies the conditions that must be present in order to fail the diagnostic and when to set the DTC.

Actions Taken When the DTC Sets

Actions Taken When the DTC sets, identifies the default actions taken when a control module sets a DTC.

Conditions for Clearing the DTC

Conditions for Clearing the DTC, identifies the conditions that must be met in order to clear the DTC.

Diagnostic Aids

Diagnostic Aids are suggestions which explain other methods to diagnose the condition. It also provides unique information about the system to assist the technician in finding and repairing a vehicle condition.

Reference Information

Reference Information includes links providing additional information to be used with the diagnostic procedure.

For example:

- Schematic Reference
- Connector End View Reference
- Component View Reference
- Description and Operation
- Electrical Information Reference
- DTC Type Reference
- Scan Tool Reference
- Special Tools

Circuit/System Verification

The Circuit/System Verification, when supported, needs to be performed prior to the Circuit/System Testing. It will determine the following conditions:

- If a higher priority concern needs to be addressed first (E.g. other DTCs)
- If other conditions are present (E.g. low fluid level)
- If the condition is current
- If the condition is intermittent
- If the system is all Ok

Note: Any diagnostic step that asks if a DTC is “set” refers to a Set, Current, Present, Active DTC status. This does not include any other DTC status. For example History, Not Run, Passed and Failed.

Circuit/System Verification is a non-intrusive procedure outlining how to verify that a system or a portion of a system is functioning correctly. During the verification process, the vehicle is kept intact and tested as a complete system. The verification is used to assist the technician in determining whether a condition is current, intermittent, or not present (All Ok). When a condition is determined to be intermittent a technician can use the [Link target (target-id 62112-) not found] link in Electrical Information Reference for additional testing information.

The technician should be able to identify if the fault is occurring on the input (signal) circuit or on the output (control) circuit when applicable.

Component Codes
The component codes are a language independent method of identifying a common component between different areas in the service information. The component codes work regardless on how the actual component name was translated.

The component codes used on the schematics will have the base code with an extension to identify

location or quantity. For example the ABS wheel speed sensors are identified on the schematic with a base code (B5) and a location extension (LF, RF, LR, and RR) as seen below:

- B5LF Wheel Speed Sensor - Left Front
- B5RF Wheel Speed Sensor - Right Front
- B5LR Wheel Speed Sensor - Left Rear
- B5LR Wheel Speed Sensor - Left Rear

The diagnostic procedures will use the base code (B5) for a wheel speed sensor but may or may not use the extension identifying location (LF, RF, LR, and RR).

Example:
Disconnect the harness connector at the appropriate B5 Wheel Speed Sensor.

Or

Disconnect the appropriate electrical connector: B5 Wheel Speed Sensor

This is done so the diagnostic procedure can be common for all four wheel speed sensors and not have to take into account part location or quantity.

When the diagnostic states “the appropriate” it is up to the technician to identify which component is being diagnosed either by the symptom (Driver’s door lock is inoperative) or the DTC descriptor (DTC C0585 04: Left Rear Door Latch Circuit Open).

Circuit/System Testing

Note: Performing the Circuit/System Verification category first will aid in determining if a vehicle condition currently exists.

Circuit/System Testing is a step by step, positive-flow, testing sequence which allows the technician to perform each test step, in sequence, until a fault is detected. If the result of a numbered test step is NOT achieved, the Right Repair Arrow below the failed test will identify what actions need to take place. If the result of a numbered test step is achieved, the normal flow is to proceed to the next numbered test step, as indicated by the Down Pass Arrow.

Intrusive diagnostics are performed to locate the system fault. System harness connections are disconnected from the component or control module to test individual circuit functions. The component or control module will be used to assist in verifying the circuit function. When a test does not pass, the repair steps (Right Repair Arrow) will indicate what circuit faults to test. For example a short to voltage, short to ground, or open/high resistance.

When testing for individual circuit faults, the technician is expected to perform terminal inspections such as connection surfaces and terminal tension at both the harness and the component or control module. When a condition is determined to be intermittent a technician can use the [Link target (target-id 62112-) not found] or [Link target (target-id 62194-) not found] link in Electrical Information Reference for additional information.

The component and control module will also be diagnosed during the test steps. A retest of a component or control module should always be performed before replacement. For example, reconnect all components and control modules and retest the system to verify the condition still exists before replacing components or control modules.

Component Testing

Component Testing may offer a static and/or dynamic component tests. These tests can be used to verify if a component is operating correctly to avoid unnecessary replacement.

Testing control modules in this category will not be offered. In most cases, the control module is used to verify the harness circuits in the Circuit/System Testing category and a retest of the control module should always be performed before replacement.

Repair Instructions

Repair Instructions provides a link to *Diagnostic Repair Verification 2-375*. This link describes how to verify the vehicle is repaired.

All links to repair, replacement, or programming procedures are located here.

Repair Verification

Repair Verification describes how to verify the vehicle is repaired when additional instructions are needed beyond what is in the Diagnostic Repair Verification.

Diagnostic System Check Instructions

The following is an overview of instructions for the general information and 14 step System Verification included in the Diagnostic System Check - Vehicle procedure.

Diagnostic Instructions

A link to *Strategy Based Diagnosis 2-286* is provided as an overview on how a technician should diagnose a vehicle.

A link to the Diagnostic System Check Instructions is provided. This provides an overview of instructions and examples for the general information and 14 step System Verification included in the Diagnostic System Check - Vehicle procedure. The examples in this document are intended to give the technician a general idea of what the test step is referring to. They are not intended to list every possible condition or situation.

Diagnostic Systems Check steps are listed by priority to guide the technician to the appropriate diagnostic procedure to correct the customer concern. There are many ways to determine the priority of diagnosing a vehicle concern. Some faults can cause customer perceived symptoms in areas unrelated to the fault. Using an example from the System Check, after reading DTCs, the technician is asked to verify there are no Electronic Control Unit Internal Performance Faults present. It is important that any internal performance issues are addressed prior to continuing through the System Check. There is no benefit addressing other DTCs that could be set due to an internal fault to a control module. If the fault is present, performing the diagnostic procedure for that fault will likely correct the customer perceived concern and possibly eliminate other DTCs that may be set.

Not all steps of the Diagnostic System Check have to be performed. The Diagnostic System Check tries to prioritize the test steps with the highest priority faults first. The technician is then lead to another document to do the actual diagnosis or repair. The strategy is to repair higher level faults that may be the cause of other system or component level symptoms. Additionally, the Diagnostic System Check can only be used for a single fault at a time. If additional faults are present, the technician must perform the diagnostic system check for each concern until all customer concerns are corrected.

Once a repair has been completed, General Motors diagnostic strategy is to always have the technician verify that the customer concern has been corrected. This is to prevent comebacks and to ensure customer satisfaction with their dealership experience. Therefore a link has been provided to *Diagnostic Repair Verification 2-375* procedure for the technician to verify the customer concern has been corrected.

There are some assumptions made when General Motors prepares service information. They include the following areas which are presumed to function as designed:

- The 12-volt battery is fully charged. General Motors assumes the majority of vehicles brought in for repair will be able to start and be driven into the service stall. If the vehicle has a dead battery, it is slow cranking or for any other reason the technician feels the customer concern may be battery related, a link is provided to [Link target (target-id 37781-) not found] . This procedure will guide the technician through inspecting and verifying the battery functions properly.
- Fuses should not be open. General Motors does not call out in diagnostic procedures to verify a fuse. The technician is expected to find an open fuse when the diagnostic test step states to check for an open circuit condition. Therefore a link has been provided to *Power Distribution Schematics 6-863* and *Electrical Center Identification Views 6-36* for technicians to reference power sources and fuse locations if they feel there may be loss of power due to an open fuse condition.
- Ground circuits are clean, tight, and in the correct location. General Motors assumes that the original ground circuits have not been compromised. The technician is expected to find a poor ground connection when the diagnostic test step states to test the ground circuit for an open/high resistance. Therefore a link has been provided to [Link target (target-id 61981-) not found] and *Harness Routing Views 6-744* for technicians to reference ground locations and which ground circuits may be related to the customer concern.
- All connectors/terminals fully seated in the area of concern. General Motors assumes that all connections are properly installed. The technician is expected to find an open or poor connection when the diagnostic test step asks to test the circuit for an open/high resistance. Therefore a link has been provided to [Link target (target-id 62031-) not found] for technicians to reference which connections may be related to the customer concern.
- There are no aftermarket devices that affect the operation of the system. General Motors can only author diagnostic and repair information for vehicle systems and components that are original equipment or genuine GM Accessories. Aftermarket equipment can negatively affect original equipment operation and lead a technician's diagnosis of a concern in the wrong direction. Therefore a link has been provided to [Link target (target-id 310488-) not found] that guides a technician through the possible causes of vehicle problems related to aftermarket accessories.
- The scan tool powers up. General Motors assumes that power is available at the Data Link Connector and the scan tool will power on. Therefore a link has been provided to [Link target (target-id 148078-) not found] if the technician finds that the scan tool does not power on.

Diagnostic System Check

1. VERIFY CUSTOMER CONCERN — This step is to obtain as much information as possible from the customer. Are there aftermarket accessories on the vehicle? When does the condition occur? Where does the condition occur? How long does the condition last? How often does the condition occur? Review the service history of the vehicle for previous repairs that could help diagnose the current concern.

   Now that the technician understands the customer concern, they should validate the concern on the vehicle. In order to verify the concern, the technician should be familiar with the normal operation of the system and refer to the owner or service manual for any information needed. Inspect the visible system components for obvious damage or conditions that could cause the concern. Conduct a thorough visual inspection. Detect unusual sounds or odors.

   The condition described by the customer may be normal. If the technician finds the vehicle to operate normally, compare with another like vehicle that is operating normally, under the same conditions described by the customer. If this is the case, explain your findings and the operation of the system to the customer. If the customer is dissatisfied, submit a Field Product Report.

2. BULLETIN SEARCH — By searching for related bulletins, recall/field actions and preliminary information documents, a procedure for a known field issue may resolve the customer concern with little or no diagnosis necessary saving the technician diagnostic time.

3. MECHANICAL CONCERNS — This step is designed to take the technician directly to a list of symptom diagnostic procedures. The technician is asked to verify the symptoms exhibited by the system are mechanical in nature and not related to an electrical system, see some examples below. If the technician feels the concern could be related to an electrical system, they should continue through the Diagnostic System Check to verify the electrical functionality of vehicle. If the technician feels the concern is exclusively related to a mechanical system, a link to *Symptoms - Vehicle 2-374* is provided to select the appropriate symptom diagnostic procedure for the customer concern.

   Examples:

   - Brake noise or diagnosing irregular pad wear
   - Water leak diagnosis
   - Engine or transmission fluid leak diagnosis
   - Manual window or door lock diagnosis
   - Vehicle vibration diagnosis
   - Exhaust noise or leak diagnosis

4. VEHICLE POWER UP VERIFICATION — The technician is asked in this step to verify the vehicle powers up. The technician should look for clues that multiple vehicle systems are receiving vehicle power mode messages, such as the cluster waking up, the radio powers on, the HVAC blower is operational, windshield wipers turn on, etc, with the ignition On. This would be a rare condition as both the power mode master and back-up power mode master would have to be inoperable, however, if the vehicle does not power up, a link to [Link target (target-id 148321-) not found] is provided.

5. CONTROL MODULE COMMUNICATION and DTC CHECK — The technician is asked in this step to record the following three pieces of data on the Repair Order; any control module that the scan tool determined is not communicating, any DTC and symptom byte set current or history, and the control module that has set the DTC.

   This is considered a setup step for the rest of the Diagnostic System Check. The technician is not expected to do anything other than record the three pieces of data provided by the scan tool on the Repair Order. This provides the information needed to complete the rest of the diagnostic system check.

   To complete this step, the technician is asked to utilize the scan tool Vehicle DTC Information function. This function will query every possible control module on the vehicle requesting all DTCs. During the DTC query, the scan tool will try to establish communication with each control module. If the scan tool can communicate with the control module during the DTC request, it will display PRESENT and provide the number of DTCs set in the control module. If the scan tool cannot communicate with a control module, it will only display NOT COMMUNICATING. Since the scan tool cannot determine if a given control module should be present or not, the technician is asked in a future step to verify that the vehicle was not built with control modules listed as NOT COMMUNICATING.

   If the scan tool cannot establish communications with ALL of the vehicles control modules, a link to [Link target (target-id 148085-) not found] is provided. A faulty control module or fault with the serial data circuit can cause no communication with all of the control modules on the vehicle. If any control module communicates on the serial data circuit, continue through the Diagnostic System check, as a future step will address any specific non communicating or group of non communicating control modules.

Once the scan tool has completed the routine, the technician should review each control module that has set a DTC and document them on the Repair Order. When reviewing the DTCs, the technician should take notice if any DTCs are powertrain related, and if so, navigate in the scan tool to the Powertrain area and utilize the Capture Info function. This will upload any Freeze Frame/Failure Records stored in the control module to the scan tool in case the data is lost from the control module. As an example, if the technician commands a Clear DTCs function on a powertrain controller, all diagnostic information stored in the controller is erased. This includes Freeze Frame/ Failure Records and Inspection/Maintenance System Status indicators, if required for your region.

6. CONTROL MODULE INTERNAL PERFORMANCE FAULTS — The technician is asked to review the DTCs recorded in step 5 and verify there are no control module internal performance faults set current. This type of fault may be the cause of other symptoms or DTCs displayed by the vehicle. By addressing this fault first, the technician may find the other concerns are resolved. The technician should always follow the diagnostic procedure for these types of faults prior to replacing any control module. If the technician finds a control module has an internal performance fault, a link is provided to *Diagnostic Trouble Code (DTC) List - Vehicle 2-301* to select the appropriate DTC diagnostic procedure.

   Examples:

Note: DTC U3000 is used for both high level control module faults and lower level faults. The fault level is determined by the symptom byte set with the DTC. Examples of some DTC U3000 internal performance fault symptoms are shown below.

- U3000 04 Control Module System Internal Malfunction
- U3000 41 Control Module General Checksum Malfunction
- U3000 49 Control Module Internal Malfunction
- P0606 Control Module Internal Performance
- P0607 Control Module Performance

7. CONTROL MODULE COMMUNICATION VERIFICATION — This step is used to ensure the control modules that are NOT COMMUNICATING were not built on the vehicle. If the technician determines that a control module that is NOT COMMUNICATING should be present, the technician is asked to follow the appropriate diagnostic procedure listed in the [Link target (target-id 148085-) not found] document.

8. COMMUNICATION and POWER MODE FAULTS — This step is asking the technician to look for communication DTCs or DTCs related to control modules powering up based on power mode, communication enable or wake-up circuits. See in the below table some examples of the DTCs the technician should diagnose prior to continuing through the Diagnostic System Check. The technician should review the list of DTCs recorded in step 4 and verify that none of these type of DTCs are present. If so, the technician is referred to the *Diagnostic Trouble Code (DTC) List - Vehicle 2-301* to select the appropriate DTC diagnostic procedure.

   Examples:

Note: DTC U3000 is used for both high level control module faults and lower level faults. The fault level is determined by the symptom byte set with the DTC. Examples of some DTC U3000 communication and power mode faults are shown below.

- U3000 04 Control Module Bus Signal/Message Malfunction
- U0140 Lost Communication with Body Control Module
- U0164 Lost Communication with Heater and Air Conditioning User Interface Control - Front
- U0184 Lost Communication with Radio
- U0402 Invalid Data Received from Transmission Control Module
- U0452 Invalid Data Received from Restraints Control Module
- U001B Gear Shift Control Module Powertrain Sensor Bus Enable
- U300D Ignition Input On/Start
- B1AA3 Run/Crank Relay Coil Control

9. POWER MODE VERIFICATION — This step verifies the Power Mode Master is receiving the proper output state of the ignition switch/push button switch. The technician should use the main power mode input, this being either the ignition key or, on vehicles equipped with Passive Entry Passive Start, the push button switch. The test should not be performed using a key fob, if the MIL is illuminated the powertrain controller may disable this input. The technician is asked to perform the test with the driver door open. This ensures the retained accessory power mode is inactive during this test which could result in different scan tool readings. The technician is only asked to verify the current Power Mode parameter in the power mode data display list. If the parameter does not match the actual ignition switch position, a link is provided to perform the [Link target (target-id 148321-) not found] diagnostic procedure.

10. SERIAL DATA AUTHENTICATION FAULTS — This step verifies that control modules are able to authenticate and verify the legitimacy of certain critical messages on in-vehicle networks. The technician should review the list of DTCs recorded in step 4 and verify that none of these DTCs are present. If so, the technician is referred to the *Diagnostic Trouble Code (DTC) List - Vehicle 2-301* to select the appropriate DTC diagnostic procedure.

    Examples:

    - U1960 Message Authentication Keys Missing or Incomplete
    - U1961 Control Module Security Hardware Internal Malfunction
    - U1962 Unable to Authenticate Serial Data Message
    - U3034 Message Authentication Keys Missing or Incomplete
    - U3035 Unable to Authenticate Serial Data Message
11. PROACTIVE ALERT IDENTIFIERS— The technician is asked in this step to verify there are no Proactive Alert Identifiers set. These identifiers are displayed on the scan tool and will only appear when the OnStar subscription is active and the customer has opted into the Proactive Alert service.
12. ENGINE CRANK and RUN VERIFICATION — Here the technician is asked to verify that the engine cranks and runs. The technician should use the main power mode input, this being either the ignition key or, on vehicles equipped with Passive Entry Passive Start, the push button switch, to complete this step. The test should not be performed using a key fob, if the MIL is illuminated the powertrain controller may disable this input. The technician should know at this point whether the engine cranks and runs without having to actually performing this test step. One of the follow has probably already occurred and this step can be skipped: The technician drove the vehicle into the stall or verified when checking the Crank and Run parameter in step 8. If the technician has not already somehow verified the engine cranks in previous steps, the technician should perform this test step. Regardless of how this step was performed, if the engine does not crank, a link is provided to *Engine Does Not Crank 2-375* or if the engine cranks but does not run, a link is provided to *Engine Cranks But Does Not Run 2-375* for the technician to choose the correct diagnostic procedure for the actual engine application being used.
13. REMAINING DTC REVIEW — Here the technician is asked to review any remaining DTCs that were not addressed in previous steps. The technician is asked first to verify there are no control module supply voltage, system voltage or 5 V circuit DTCs present. Control modules, systems or components with insufficient or zero voltage can cause one or multiple symptoms to exist on the vehicle. Control module voltage issues could also be the cause of failures during a programming event. The technician should correct voltage issues prior to addressing any programming or configuration DTCs. The technician should then check for any ECU programming, setup or configuration DTCs. By programming software or configuring a control module, the technician could correct the customer concern unobtrusively. The remaining DTCs, which are usually specific system or component faults, are diagnosed last. They can include ECU input and output circuit DTCs or individual circuit faults that usually cause single symptoms or failure modes on the vehicle and can be fixed following the proper DTC diagnostic procedure. In general, the technician should think about what DTCs or faults could be caused by another DTC or fault. A failed sensor may set a component DTC and then the system may set a DTC indicating the system cannot operate properly. By correcting the sensor fault, the system may now operate properly and the system level DTC will transition to history. Refer to the examples within each category below to understand the differences between these DTCs. If DTCs of these type are current, the technician is referred to *Diagnostic Trouble Code (DTC) List - Vehicle 2-301* to choose the correct DTC diagnostic procedure.

    13.1. Voltage DTCs

Note: DTC U3000 is used for both high level control module faults and lower level faults. The fault level is determined by the symptom byte set with the DTC. Examples of some DTC U3000 voltage faults are shown below.

- U3000 16 Control Module Circuit Low Voltage
- U3000 17 Control Module Circuit High Voltage
- B19F4 Vehicle 12V Charging System
- P0560 System Voltage
- P0651 Sensor Reference 2 Circuit
- U3006 Control Module Power 1 Circuit

13.2. Programming, Setup, Configuration or Software Performance DTCs

Note: DTC U3000 is used for both high level control module faults and lower level faults. The fault level is

determined by the symptom byte set with the DTC. Examples of some DTC U3000 programming, setup, configuration, or software faults are shown below.

- U3000 51 Control Module Not Programmed
- U3000 54 Control Module Missing Calibration
- U3000 55 Control Module Not Configured
- C05D4 Brake Master Cylinder Piston Position Sensor Calibration Not Learned
- P0602 Control Module Not Programmed
- P0630 VIN Not Programmed or Mismatched - Powertrain Control Module (PCM)

13.3. Component related DTCs

Note: DTC U3000 is used for both high level control module faults and lower level faults. The fault level is determined by the symptom byte set with the DTC. Examples of some DTC U3000 component faults are shown below.

- U3000 4A Control Module Incorrect Component Installed
- B0013 Co-Driver Knee Module High Control
- B15A7 Instrument Panel Accent Lighting Control
- C0502 Left Front Wheel Speed Sensor Circuit Low Input
- P0535 Air Conditioning Evaporator Temperature Sensor Circuit
- P0131 Heated Oxygen Sensor Circuit Low
- P0712 Transmission Fluid Temperature Sensor Circuit Low

13.4. System related DTCs

Note: DTC U3000 is used for both high level control module faults and lower level faults. The fault level is determined by the symptom byte set with the DTC. Examples of some DTC U3000 system related faults are shown below.

- U3000 9A Control Module Incorrect Component or System Operating Conditions Exceeded
- B1A04 Front View Camera - Windshield
- C003F Wheel Speed Sensors Direction Correlation
- C2A21 Park Brake Actuator Position Unknown
- P0101 Mass Airflow Sensor Performance
- P175E Transmission Control System - Shift Limiting Active

13.5. Any other remaining DTCs — The technician should diagnose and correct any other DTCs that are left that were not from the categories above.

14. EMISSION RELATED INSPECTION/MAINTENANCE TESTING CONCERNS — Several regions require that a vehicle pass on-board diagnostic system tests and the inspection/maintenance emission tests in order to renew license plates or vehicle registration. This is accomplished by viewing the Inspection/Maintenance System Status display on a scan tool. Using a scan tool, the technician can observe the Inspection/Maintenance System Status in order to verify that the vehicle meets the criteria that comply with the local area requirements. If inspection and maintenance checks are required in your region, and the customer concern is related to not passing an Inspection/Maintenance test, a link is provided to *Inspection/Maintenance System Check 2-375* where the technician can choose the appropriate Inspection/Maintenance System Check for the actual engine application being used.

15. SYMPTOM DIAGNOSIS — At this step, the diagnostics are assuming that the only information the technician has available to diagnose the customer concern are symptoms of a problem. There are no DTCs set current or history. There may be a Driver Information Center display message or a system indicator to aid in identifying the root cause. The technician should evaluate the symptoms and conditions described by the customer and perform the symptoms diagnostics for the area of customer concern. A link is provided to *Symptoms - Vehicle 2-374* which contains a list of all symptoms related to this service manual publication.

Diagnostic Starting Point - Vehicle

Begin the system diagnosis with *Diagnostic System Check - Vehicle 2-296*. The Diagnostic System Check - Vehicle will provide a complete strategy to locate and repair a mechanical or electrical vehicle fault. Not following this strategy may cause additional diagnostic time and/or misdiagnosis.

The Diagnostic System Check - Vehicle will provide the following strategy:

- When to verify the customer concern and identify related bulletins, recalls and preliminary information
- When to identify a control module that is not communicating, a control module that has set a DTC, and the DTC diagnostic priority
- When to address power mode concerns
- When to verify the engine cranks and runs
- When to diagnose symptom related concerns

Diagnostic System Check - Vehicle

Diagnostic Instructions

- Review *Strategy Based Diagnosis 2-286* for an overview of the diagnostic approach.
- *Diagnostic System Check Instructions 2-290* provides an overview of each diagnostic step.
- Continue through the Diagnostic System Check until you are directed to follow a particular diagnostic or repair procedure. Once a repair has been completed, perform the *Diagnostic Repair Verification 2-375* and verify the customer concern has been corrected.

The diagnostic procedures within this manual are developed on the assumption that the following areas function as designed:

- The 12 V battery is fully charged and cables are clean and tight. Refer to: [Link target (target-id 37781-) not found] .
- Fuses are not open. Refer to: *Power Distribution Schematics 6-863* and *Electrical Center Identification Views 6-36*.
- Ground circuits for the area of customer concern are clean, tight, and in the correct location. Refer to: [Link target (target-id 61981-) not found] and *Harness Routing Views 6-744*.
- All connectors/terminals fully seated in the area of concern. Refer to: [Link target (target-id 62031-) not found] .
- There are no aftermarket devices that affect the operation of the system. Refer to: [Link target (target-id 310488-) not found] .
- The scan tool powers up. Refer to: [Link target (target-id 148078-) not found] .

Diagnostic System Check

1. VERIFY CUSTOMER CONCERN — Understand and validate the customer concern. Inspect the visible system components for obvious damage or conditions that may cause the concern.
2. BULLETIN SEARCH — Check for related bulletins, recall/field actions and preliminary information.
3. MECHANICAL CONCERNS — Verify the symptom is not exclusively a mechanical concern.

⇒ **If the symptom is exclusively a mechanical concern**

Refer to: *Symptoms - Vehicle 2-374*.

⇓ **If the symptom is not a mechanical concern**

Note:

- Do not clear any DTCs unless instructed to do so by a diagnostic procedure. If any DTC is Powertrain related, select Capture Info to store DTC and Freeze Frame/Failure Records to the scan tool.
- Changes in vehicle power mode can be determined by the indicators on the S38 On/Off Vehicle Switch. The indicator should match the selected power mode and change as the power mode is changed.

4. VEHICLE POWER UP VERIFICATION — Vehicle in Service Mode, verify the vehicle powers up.

⇒ **If the vehicle does not power up**

Refer to: [Link target (target-id 148321-) not found] .

⇓ **If the vehicle powers up**

Note: When checking for DTCs and determining what diagnostic actions should be taken, it is important to understand if the DTC is a current DTC or a history DTC. It is not uncommon for vehicles to arrive for service with a DTC that is history and the underlying fault condition no longer present. Refer to *DTC Status Information 2-299* to help determine which DTCs are current and should be diagnosed as such, and which DTCs are not current and should not be considered for diagnosis.

5. CONTROL MODULE COMMUNICATION and DTC CHECK — Using a scan tool, perform the Vehicle DTC Information function and verify at least one control module communicates with the scan tool. Record on the Repair Order the following information:
   - Any control module that is not communicating.
   - Any DTC, including symptom byte, and the control module that has set the DTC.

⇒ **If the scan tool does not communicate with any control module on the vehicle**

Refer to: [Link target (target-id 148085-) not found] .

⇓ **If the scan tool communicates with any control module**

6. CONTROL MODULE INTERNAL PERFORMANCE FAULTS — Verify there are no current control module Internal Hardware Performance DTCs set.

⇒ **If any DTC of this type is set**

Refer to: *Diagnostic Trouble Code (DTC) List - Vehicle 2-301*.

⇓ **If no DTC of this type is set**

7. CONTROL MODULE COMMUNICATION VERIFICATION — Verify the vehicle is equipped with any control module identified as not communicating on the scan tool. For a list of all control modules the vehicle may be equipped with, refer to: [Link target (target-id 148085-) not found] . With all non-communicating control module(s) identified, select the appropriate Data Communication schematic to determine the RPO(s) associated with the control module and verify the RPO is or is not present on the vehicle being diagnosed. All control modules should be communicating, as equipped.

⇒ **If the vehicle is equipped with a control module that is not communicating**

Refer to: [Link target (target-id 148085-) not found] . Select the appropriate Scan Tool Does Not Communicate with Device on CAN link in the Diagnostic Procedure column.

⇓ **If all control modules the vehicle is built with are communicating**

8. COMMUNICATION and POWER MODE FAULTS — Verify there are no current control module Power Mode or Communication DTCs set.

⇒ **If any DTC of this type is set**

Refer to: *Diagnostic Trouble Code (DTC) List - Vehicle 2-301*.

⇓ **If no DTC of this type is set**

Note: The engine may start during this test. Ensure the vehicle is out of gear and the parking brake is applied. Turn the engine OFF as soon as the crank power mode parameter has been observed.

9. POWER MODE VERIFICATION — Driver door open, observe each scan tool Power Mode data parameter while cycling through all power modes. Verify all Power Mode data parameters match the actual ignition switch/push button switch selection.

⇒ **If any Power Mode data parameter does not match**

Refer to: [Link target (target-id 148321-) not found] .

⇓ **If all Power Mode data parameters match**

10. SERIAL DATA AUTHENTICATION FAULTS - Verify DTC U1960, U1961, U1962, U3034, or U3035 is not set.

⇒ **If any of the DTCs are set**

Refer to: *Diagnostic Trouble Code (DTC) List - Vehicle 2-301*.

⇓ **If none of the DTCs are set**

11. PROACTIVE ALERT IDENTIFIERS — The technician is asked in this step to verify there are no Proactive Alert Identifiers set. These identifiers are displayed on the scan tool and will only appear when the OnStar subscription is active and the customer has opted into the Proactive Alert service.

⇒ **If any Proactive Alert Identifier is set**

Refer to: *Proactive Alerts List 2-376*

⇓ **If no Proactive Alert Identifier is set**

12. ENGINE CRANK and RUN VERIFICATION — Verify that the engine cranks and runs.

⇒ **If the engine does not crank**

Refer to: *Engine Does Not Crank 2-375*.

⇒ **If the engine does not run**

Refer to: *Engine Cranks But Does Not Run 2-375*.

⇓ **If the engine cranks and runs**

13. REMAINING DTC REVIEW — Verify there are no other DTCs set.

⇒ **If other DTCs are set**

Diagnose them in the order listed below. Refer to *Diagnostic Trouble Code (DTC) List - Vehicle 2-301*.

13.1. Voltage DTCs

13.2. Programming, Setup or Configuration or Software Performance DTCs

13.3. Component related DTCs

13.4. System related DTCs

13.5. Any remaining DTCs

⇓ **If no other DTCs are set**

14. EMISSION RELATED INSPECTION/MAINTENANCE TESTING CONCERNS — If inspection and maintenance checks are required in your region, verify the customer concern is not related to inspection/maintenance testing.

⇒ **If the customer concern is related to inspection/maintenance testing**

Refer to: *Inspection/Maintenance System Check 2-375*.

⇓ **If the customer concern is not related to inspection/maintenance testing**

15. SYMPTOM DIAGNOSIS — Diagnose any remaining customer concern. Refer to: *Symptoms - Vehicle 2-374*.

DTC Status Information

Diagnostic Trouble Codes (DTCs) are status indicators of the vehicle's self-diagnostic and reporting capability. Each DTC represents the status of a particular internal test within a control module. Given appropriate conditions, the control module will begin actively monitoring conditions specified by the diagnostic. These are identified and referred to as Conditions for Running the DTC in service information. Each DTC has an associated status, identifying the state of the control module diagnostic. These statuses are identified when viewing DTC information on the scan tool and are described below.

DTC Status

Decoded Value	Description
Not Failed	Test has completed at least once this operating cycle and has passed successfully each time
Current	Test has completed since the last DTC clear, has met the threshold to be stored in long term memory, and has failed the most recent completed test. Test may not have run yet this operation cycle.
History	Test has completed since the last DTC clear, has met the threshold to be stored in long term memory, and has passed the most recent completed test. Test may not have run yet this operation cycle.
Pending	Test has completed and failed at least once in the current or previous operation cycle.
Test Not Complete this Operating Cycle	Test has completed at least once since DTC clear but has not completed yet this operation cycle. Test may have failed since clear but has not met the threshold to be stored in long term memory.
Test Not Complete Since DTC Cleared	Test has not completed successfully since the DTC was last cleared.
Failed Since DTC Cleared	Test has completed since the last DTC clear and failed at least once but has not met the threshold to be stored in long term memory and has not failed during the current or previous operation cycle.

This Operating Cycle

Decoded Value	Description
Failed	Test has completed at least once this operation cycle and has failed at least once.
Not Failed	Test has completed at least once this operation cycle and has passed each time.
Passed and Failed	Test has completed and failed at least once this operation cycle, but the most recent test passed.
Test Not Complete for this DTC	Test has not completed yet this operation cycle.

Last Test

Decoded Value	Description
Passed	Most recent test completed and passed.
Failed	Most recent test completed and failed.
Not Complete Since DTC Cleared	Test has not completed since DTC clear.

Since DTC Clear

Decoded Value	Description
Failed	Test has completed at least once since DTC was cleared and has failed at least once, including the most recent test.
Passed and Failed	Test has completed at least once since DTC was cleared and the most recent test passed, but not all tests have passed.
Not Failed	Test has completed at least once since DTC was cleared and every test has passed.
Test Not Complete for this DTC	Test has not completed yet since DTC was cleared.

Warning Indicator

Decoded Value	Description
Requested	A malfunction indicator has been commanded to be illuminated as a result of this DTC.
Not Requested	A malfunction indicator has not been requested as a result of this DTC.

Diagnosing History DTCs

It is very important to understand DTC status and its relationship to diagnosing a vehicle. If a DTC status is History, this means that the fault is not currently present on the vehicle. In any instance of a history DTC, diagnosis using a DTC diagnostic procedure in service information should not be attempted if not directly related to the customer complaint. Every diagnostic is written only for an active fault with a current DTC. Following a diagnostic procedure when only a history DTC is present will likely result in a misdiagnosis. This is foundational to *Strategy Based Diagnosis 2-286* and outlined as part of *Diagnostic System Check - Vehicle 2-296*.

If a DTC is only presented as a history DTC and is related to the customer complaint, it may be used as a guide or indicator for replicating the condition that caused the DTC to set. Observing the Conditions for Running the DTC in a DTC diagnostic procedure may help in recreating the conditions necessary for the DTC to run. Information within the DTC diagnostic procedure, such as the Fault Information table or Conditions for Setting the DTC, may also be helpful in recreating an intermittent DTC. Refer to Additional Information in *Strategy Based Diagnosis 2-286* for more detail in diagnosing intermittent concerns.

Powertrain Diagnostic Trouble Code (DTC) Type Definitions

Emissions Related DTCs

Action Taken When the DTC Sets – Type A

- The control module illuminates the malfunction indicator lamp (MIL) when the diagnostic runs and fails.
- The control module records the operating conditions at the time the diagnostic fails. The control module stores this information in the Freeze Frame/Failure Records.

Action Taken When the DTC Sets – Type B

- The control module illuminates the MIL on the second consecutive ignition cycle that the diagnostic runs and fails.
- The control module records the operating conditions at the time the diagnostic fails. The first time the diagnostic fails, the control module stores this information in the Failure Records. If the diagnostic reports a failure on the second consecutive ignition cycle, the control module records the operating conditions at the time of the failure. The control module writes the operating conditions to the Freeze Frame and updates the Failure Records.
- The following applies to misfire DTCs:
  - If the control module detects a low level or an emission level misfire condition during 2 consecutive trips, the control module illuminates the MIL.
  - If the control module detects a high level or catalyst damaging misfire, the control module flashes the MIL at a rate of once per second.
  - If the control module detects a misfire during 2 non-consecutive trips, the stored conditions are compared with the current conditions. The control module illuminates the MIL when the following conditions occur:
    - The engine load is within 20 percent of the previous test that failed.
    - The engine speed is within 375 RPM of the previous test that failed.
    - The engine coolant temperature is in the same range of the previous test that failed.
- The following applies to fuel trim DTCs:
  - If the control module detects a fuel trim condition during 2 consecutive trips, the control module illuminates the MIL.
  - If the control module detects a fuel trim condition during 2 non-consecutive trips, the stored conditions are compared with the current conditions. The control module illuminates the MIL when the following conditions occur:
    - The engine load is within 20 percent of the previous test that failed.
    - The engine speed is within 375 RPM of the previous test that failed.
    - The engine coolant temperature is in the same range of the previous test that failed.

Conditions for Clearing the MIL/DTC – Type A or Type B

- The control module turns OFF the MIL after 4 consecutive ignition cycles that the diagnostic runs and does not fail.

- A current DTC, Last Test Failed, clears when the diagnostic runs and passes.
- A history DTC clears after 40 consecutive warm-up cycles, if no failures are reported by this or any other emission related diagnostic.
- Clear the MIL and the DTC with a scan tool.

Non-Emissions Related DTCs

Action Taken When the DTC Sets – Type C

- The control module stores the DTC information into memory when the diagnostic runs and fails.
- The MIL will not illuminate.
- The control module records the operating conditions at the time the diagnostic fails. The control module stores this information in the Failure Records.
- The driver information center, if equipped, may display a message.

Conditions for Clearing the DTC – Type C

- A current DTC Last Test Failed clears when the diagnostic runs and passes.
- A history DTC clears after 40 consecutive warm-up cycles, if no failures are reported by this or any other non-emission related diagnostic.
- Clear the DTC with a scan tool.

Diagnostic Trouble Code (DTC) List - Vehicle

This master list includes all applicable diagnostic trouble codes in alphanumeric order.

Diagnostic Trouble Code (DTC) List - Vehicle

DTC	Diagnostic Procedure
B0001	Supplemental Restraints - [Link target (target-id 289883-) not found]
B0002	Supplemental Restraints - [Link target (target-id 289883-) not found]
B0010	Supplemental Restraints - [Link target (target-id 289884-) not found]
B0011	Supplemental Restraints - [Link target (target-id 289884-) not found]
B0021	Supplemental Restraints - [Link target (target-id 317288-) not found]
B0029	Supplemental Restraints - [Link target (target-id 317288-) not found]
B0070	Supplemental Restraints - [Link target (target-id 317289-) not found]
B0072	Supplemental Restraints - [Link target (target-id 317289-) not found]
B007E	Supplemental Restraints - [Link target (target-id 313882-) not found]
B007F	Supplemental Restraints - [Link target (target-id 313882-) not found]
B0090	Supplemental Restraints - [Link target (target-id 317522-) not found]
B0091	Supplemental Restraints - [Link target (target-id 317522-) not found]
B0092	Supplemental Restraints - [Link target (target-id 317522-) not found]
B0093	Supplemental Restraints - [Link target (target-id 317522-) not found]
B0094	Supplemental Restraints - [Link target (target-id 317522-) not found]
B0095	Supplemental Restraints - [Link target (target-id 317522-) not found]
B0096	Supplemental Restraints - [Link target (target-id 317522-) not found]
B0097	Supplemental Restraints - [Link target (target-id 317522-) not found]
B0098	Supplemental Restraints - [Link target (target-id 317522-) not found]

DTC	Diagnostic Procedure
B0126	Driver Monitoring and Occupant Detection - [Link target (target-id 327949-) not found]
B012C	Power Outlets - [Link target (target-id 338801-) not found]
B0201	Image Display Cameras - [Link target (target-id 333522-) not found]
B0202	Image Display Cameras - [Link target (target-id 344552-) not found]
B0203	Image Display Cameras - [Link target (target-id 344553-) not found]
B0204	Image Display Cameras - [Link target (target-id 344554-) not found]
B1008	Horns and Pedestrian Alerts - [Link target (target-id 315457-) not found]
B100C	Trailering Systems - [Link target (target-id 326388-) not found]
B1023	Wipers and Washers - [Link target (target-id 317708-) not found]
B102E	Lighting - [Link target (target-id 313549-) not found]
B1038	Vehicle Access - [Link target (target-id 316927-) not found]
B1048	Lighting - [Link target (target-id 317465-) not found]
B1066	Fixed and Moveable Windows - [Link target (target-id 315458-) not found]
B107E	Vehicle Access - [Link target (target-id 317528-) not found]
B107F	Vehicle Access - [Link target (target-id 317528-) not found]
B108E	Lighting - [Link target (target-id 313551-) not found]
B1090	Power Seats - [Link target (target-id 324035-) not found]
B1091	Power Seats - [Link target (target-id 324035-) not found]
B1092	Power Seats - [Link target (target-id 324035-) not found]
B1093	Power Seats - [Link target (target-id 324035-) not found]
B1094	Power Seats - [Link target (target-id 324035-) not found]
B1095	Power Seats - [Link target (target-id 324035-) not found]
B10A4	Lighting - [Link target (target-id 334785-) not found]
B10A5	Lighting - [Link target (target-id 334786-) not found]
B10A9	Trailering Systems - [Link target (target-id 325943-) not found]
B10B4	Supplemental Restraints - [Link target (target-id 317523-) not found]
B10C8	Wipers and Washers - [Link target (target-id 313569-) not found]
B10E9	Lighting - [Link target (target-id 338014-) not found]
B10FA	HVAC - Automatic - [Link target (target-id 318791-) not found]
B1105	Power Seats - [Link target (target-id 317270-) not found]
B1114	Cellular, Entertainment, and Navigation - [Link target (target-id 313041-) not found]
B113C	Theft Deterrent - [Link target (target-id 320486-) not found]
B1141	HVAC - Automatic - [Link target (target-id 318791-) not found]
B1143	Lighting - [Link target (target-id 317467-) not found]
B115E	Vehicle Access - [Link target (target-id 317532-) not found]
B115F	Vehicle Access - [Link target (target-id 317532-) not found]
B1176	Wipers and Washers - [Link target (target-id 313570-) not found]
B11A2	Vehicle Access - [Link target (target-id 348875-) not found]
B11A2	Vehicle Access - [Link target (target-id 350226-) not found]
B11A4	Vehicle Access - [Link target (target-id 350253-) not found]
B11A4	Vehicle Access - [Link target (target-id 348876-) not found]
B11D1	Lighting - [Link target (target-id 317876-) not found]

DTC	Diagnostic Procedure
B11D2	Lighting - [Link target (target-id 317876-) not found]
B120C	Supplemental Restraints - [Link target (target-id 317523-) not found]
B1236	Lighting - [Link target (target-id 313554-) not found]
B124E	Seat Heating and Cooling - [Link target (target-id 327571-) not found]
B1251	Seat Heating and Cooling - [Link target (target-id 327571-) not found]
B125D	Vehicle Access - [Link target (target-id 350253-) not found]
	Vehicle Access - [Link target (target-id 348876-) not found]
B1267	Wipers and Washers - [Link target (target-id 317709-) not found]
B1270	Driver Assistance Systems - [Link target (target-id 332121-) not found]
B1271	Driver Assistance Systems - [Link target (target-id 332121-) not found]
B12CC	Seat Heating and Cooling - [Link target (target-id 317279-) not found]
B12D4	Supplemental Restraints - [Link target (target-id 317524-) not found]
B12D5	Supplemental Restraints - [Link target (target-id 317524-) not found]
B12FA	Wipers and Washers - [Link target (target-id 316884-) not found]
B12FC	Wipers and Washers - [Link target (target-id 327630-) not found]
B132B	Parking Assistance Systems - [Link target (target-id 297192-) not found]
B132C	Parking Assistance Systems - [Link target (target-id 297192-) not found]
B132D	Parking Assistance Systems - [Link target (target-id 297192-) not found]
B132E	Parking Assistance Systems - [Link target (target-id 297192-) not found]
B1338	Seat Heating and Cooling - [Link target (target-id 317279-) not found]
B1339	Seat Heating and Cooling - [Link target (target-id 317279-) not found]
B133A	Seat Heating and Cooling - [Link target (target-id 317279-) not found]
B1346	Cellular, Entertainment, and Navigation - [Link target (target-id 313801-) not found]
B1349	Parking Assistance Systems - [Link target (target-id 317615-) not found]
B1386	Driver Assistance Systems - [Link target (target-id 321525-) not found]
B1387	Driver Assistance Systems - [Link target (target-id 321525-) not found]
B1388	Driver Assistance Systems - [Link target (target-id 331168-) not found]
B1389	Driver Assistance Systems - [Link target (target-id 331168-) not found]
B13A9	Supplemental Restraints - [Link target (target-id 329393-) not found]
B13AA	Cellular, Entertainment, and Navigation - [Link target (target-id 313043-) not found]
B13AB	Cellular, Entertainment, and Navigation - [Link target (target-id 317598-) not found]
B13AC	Driver Assistance Systems - [Link target (target-id 297199-) not found]
B13AD	Driver Assistance Systems - [Link target (target-id 297200-) not found]
B13AE	Parking Assistance Systems - [Link target (target-id 297196-) not found]
B13AF	Parking Assistance Systems - [Link target (target-id 297196-) not found]
B13B0	Parking Assistance Systems - [Link target (target-id 297193-) not found]
B13B1	Parking Assistance Systems - [Link target (target-id 297193-) not found]
B13B5	Parking Assistance Systems - [Link target (target-id 297195-) not found]
B13DF	Vehicle Access - [Link target (target-id 327558-) not found]
B13E7	Horns and Pedestrian Alerts - [Link target (target-id 313548-) not found]
B1442	Remote Functions - [Link target (target-id 319783-) not found]
B1444	Remote Functions - [Link target (target-id 319784-) not found]

DTC	Diagnostic Procedure
B1446	Remote Functions - [Link target (target-id 319785-) not found]
B1451	Remote Functions - [Link target (target-id 319786-) not found]
B147F	Driver Assistance Systems - [Link target (target-id 345921-) not found]
B1491	Supplemental Restraints - [Link target (target-id 317525-) not found]
B14A3	Vehicle Access - [Link target (target-id 316929-) not found]
B14A4	Vehicle Access - [Link target (target-id 316929-) not found]
B14A5	Vehicle Access - [Link target (target-id 316930-) not found]
B14A6	Vehicle Access - [Link target (target-id 316930-) not found]
B14BB	Vehicle Access - [Link target (target-id 332255-) not found]
B14DC	Supplemental Restraints - [Link target (target-id 329392-) not found]
B14E0	Power Seats - [Link target (target-id 327686-) not found]
B14E1	Power Seats - [Link target (target-id 327686-) not found]
B14E2	Power Seats - [Link target (target-id 327687-) not found]
B14E3	Power Seats - [Link target (target-id 327687-) not found]
B14E6	Power Seats - [Link target (target-id 327687-) not found]
B14E7	Power Seats - [Link target (target-id 327687-) not found]
B1511	Remote Functions - [Link target (target-id 319787-) not found]
B1513	Remote Functions - [Link target (target-id 319788-) not found]
B1578	Vehicle Access - [Link target (target-id 325881-) not found]
B1579	Vehicle Access - [Link target (target-id 325882-) not found]
B1584	Vehicle Access - [Link target (target-id 325883-) not found]
B1586	Vehicle Access - [Link target (target-id 347029-) not found]
B1589	Vehicle Access - [Link target (target-id 345277-) not found]
B158A	Vehicle Access - [Link target (target-id 345277-) not found]
B158C	Vehicle Access - [Link target (target-id 348856-) not found]
B1594	Image Display Cameras - [Link target (target-id 309439-) not found]
B1595	Image Display Cameras - [Link target (target-id 309440-) not found]
B1596	Image Display Cameras - [Link target (target-id 341717-) not found]
B1597	Image Display Cameras - [Link target (target-id 309441-) not found]
B1598	Image Display Cameras - [Link target (target-id 309442-) not found]
B1599	Driver Monitoring and Occupant Detection - [Link target (target-id 327976-) not found]
B15A7	Lighting - [Link target (target-id 317468-) not found]
B15A8	Lighting - [Link target (target-id 332218-) not found]
B15AB	Driver Assistance Systems - [Link target (target-id 345918-) not found]
B15B3	Cellular, Entertainment, and Navigation - [Link target (target-id 327126-) not found]
B15B9	Cellular, Entertainment, and Navigation - [Link target (target-id 327127-) not found]
B15DF	Supplemental Restraints - [Link target (target-id 317291-) not found]
B15E3	Supplemental Restraints - [Link target (target-id 317291-) not found]
B15EC	Vehicle Access - [Link target (target-id 316932-) not found]
B15ED	Vehicle Access - [Link target (target-id 316932-) not found]
B15EE	Immobilizer - [Link target (target-id 320484-) not found]
B16C5	Vehicle Access - [Link target (target-id 313566-) not found]

DTC	Diagnostic Procedure
B170C	Seat Heating and Cooling - [Link target (target-id 317280-) not found]
B170E	Seat Heating and Cooling - [Link target (target-id 317280-) not found]
B171C	Vehicle Access - [Link target (target-id 348875-) not found]
B171C	Vehicle Access - [Link target (target-id 350226-) not found]
B1737	Cellular, Entertainment, and Navigation - [Link target (target-id 304104-) not found]
B174C	Vehicle Access - [Link target (target-id 350253-) not found]
B174E	Cellular, Entertainment, and Navigation - [Link target (target-id 324214-) not found]
B1769	Vehicle Access - [Link target (target-id 317539-) not found]
B176A	Vehicle Access - [Link target (target-id 316934-) not found]
B176B	Vehicle Access - [Link target (target-id 317540-) not found]
B178C	Cellular, Entertainment, and Navigation - [Link target (target-id 313049-) not found]
B17F0	Supplemental Restraints - [Link target (target-id 328903-) not found]
B17F2	Supplemental Restraints - [Link target (target-id 328903-) not found]
B1803	Vehicle Access - [Link target (target-id 348875-) not found]
B1803	Vehicle Access - [Link target (target-id 350226-) not found]
B1805	Vehicle Access - [Link target (target-id 350253-) not found]
B1805	Vehicle Access - [Link target (target-id 348876-) not found]
B182C	Vehicle Access - [Link target (target-id 350226-) not found]
B1835	Lighting - [Link target (target-id 317470-) not found]
B1837	Lighting - [Link target (target-id 313557-) not found]
B1839	Lighting - [Link target (target-id 350293-) not found]
B187A	Seat Heating and Cooling - [Link target (target-id 327569-) not found]
B187B	Seat Heating and Cooling - [Link target (target-id 327569-) not found]
B187C	Seat Heating and Cooling - [Link target (target-id 327569-) not found]
B187D	Seat Heating and Cooling - [Link target (target-id 327569-) not found]
B187E	Trailering Systems - [Link target (target-id 326389-) not found]
B187F	Cellular, Entertainment, and Navigation - [Link target (target-id 335464-) not found]
B1912	Lighting - [Link target (target-id 349386-) not found]
B1918	Lighting - [Link target (target-id 317472-) not found]
B1919	Lighting - [Link target (target-id 317473-) not found]
B191A	Lighting - [Link target (target-id 332218-) not found]
B192A	Theft Deterrent - [Link target (target-id 320487-) not found]
B192B	Theft Deterrent - [Link target (target-id 320488-) not found]
B1952	Fixed and Moveable Windows - [Link target (target-id 317545-) not found]
B1953	Fixed and Moveable Windows - [Link target (target-id 323948-) not found]
B1954	Fixed and Moveable Windows - [Link target (target-id 323949-) not found]
B1955	Fixed and Moveable Windows - [Link target (target-id 323950-) not found]
B1956	Fixed and Moveable Windows - [Link target (target-id 313797-) not found]
B1957	Fixed and Moveable Windows - [Link target (target-id 313797-) not found]
B1958	Fixed and Moveable Windows - [Link target (target-id 313797-) not found]
B1959	Fixed and Moveable Windows - [Link target (target-id 313797-) not found]
B195B	Vehicle Access - [Link target (target-id 317544-) not found]

DTC	Diagnostic Procedure
B195C	Vehicle Access - [Link target (target-id 317544-) not found]
B195D	Vehicle Access - [Link target (target-id 317263-) not found]
B195E	Vehicle Access - [Link target (target-id 317263-) not found]
B1960	Cellular, Entertainment, and Navigation - [Link target (target-id 304095-) not found]
B1961	Cellular, Entertainment, and Navigation - [Link target (target-id 304095-) not found]
B1962	Cellular, Entertainment, and Navigation - [Link target (target-id 304095-) not found]
B1963	Cellular, Entertainment, and Navigation - [Link target (target-id 304095-) not found]
B196B	Wipers and Washers - [Link target (target-id 320727-) not found]
B196D	Power Seats - [Link target (target-id 317272-) not found]
B196E	Power Seats - [Link target (target-id 320495-) not found]
B196F	Power Seats - [Link target (target-id 317273-) not found]
B1977	Immobilizer - [Link target (target-id 313612-) not found]
B197D	Immobilizer - [Link target (target-id 313618-) not found]
B197F	Immobilizer - [Link target (target-id 313620-) not found]
B1980	Immobilizer - [Link target (target-id 313621-) not found]
B1981	Immobilizer - [Link target (target-id 313622-) not found]
B1987	Immobilizer - [Link target (target-id 313623-) not found]
B198A	Immobilizer - [Link target (target-id 313626-) not found]
B198B	Wipers and Washers - [Link target (target-id 316885-) not found]
B198F	Lighting - [Link target (target-id 317877-) not found]
B1990	Lighting - [Link target (target-id 317877-) not found]
B1991	Lighting - [Link target (target-id 313648-) not found]
B1994	Lighting - [Link target (target-id 317879-) not found]
B1995	Lighting - [Link target (target-id 317879-) not found]
B1996	Lighting - [Link target (target-id 317880-) not found]
B1997	Lighting - [Link target (target-id 317880-) not found]
B1998	Lighting - [Link target (target-id 317881-) not found]
B1999	Lighting - [Link target (target-id 317881-) not found]
B199A	Lighting - [Link target (target-id 317882-) not found]
B199B	Lighting - [Link target (target-id 317882-) not found]
B199C	Lighting - [Link target (target-id 317883-) not found]
B199D	Lighting - [Link target (target-id 317883-) not found]
B19A0	Lighting - [Link target (target-id 313663-) not found]
B19A1	Lighting - [Link target (target-id 317885-) not found]
B19A2	Lighting - [Link target (target-id 317885-) not found]
B19A3	Lighting - [Link target (target-id 313559-) not found]
B19A4	Lighting - [Link target (target-id 313559-) not found]
B19A6	Wipers and Washers - [Link target (target-id 313572-) not found]
B19B0	Displays and Gauges - [Link target (target-id 313904-) not found]
B19B6	Power Seats - [Link target (target-id 317276-) not found]
B19BA	Lighting - [Link target (target-id 317476-) not found]
B19BB	Parking Assistance Systems - [Link target (target-id 297191-) not found]

DTC	Diagnostic Procedure
B19BC	Parking Assistance Systems - [Link target (target-id 297191-) not found]
B19BD	Parking Assistance Systems - [Link target (target-id 297191-) not found]
B19BE	Parking Assistance Systems - [Link target (target-id 297191-) not found]
B19C2	Seat Heating and Cooling - [Link target (target-id 317281-) not found]
B19C3	Seat Heating and Cooling - [Link target (target-id 317281-) not found]
B19C7	Vehicle Access - [Link target (target-id 317543-) not found]
B19C8	Vehicle Access - [Link target (target-id 317262-) not found]
B19C9	Vehicle Access - [Link target (target-id 317262-) not found]
B19CA	Seat Heating and Cooling - [Link target (target-id 317282-) not found]
B19CB	Seat Heating and Cooling - [Link target (target-id 317282-) not found]
B19CC	Seat Heating and Cooling - [Link target (target-id 317282-) not found]
B19CD	Seat Heating and Cooling - [Link target (target-id 317282-) not found]
B19CE	Seat Heating and Cooling - [Link target (target-id 327580-) not found]
B19CF	Seat Heating and Cooling - [Link target (target-id 327580-) not found]
B19D0	Seat Heating and Cooling - [Link target (target-id 327580-) not found]
B19D1	Seat Heating and Cooling - [Link target (target-id 327580-) not found]
B19D6	Seat Heating and Cooling - [Link target (target-id 317283-) not found]
B19D7	Seat Heating and Cooling - [Link target (target-id 327566-) not found]
B19D9	Sunroof - [Link target (target-id 313609-) not found]
B19DA	Cellular, Entertainment, and Navigation - [Link target (target-id 313051-) not found]
B19EC	Sunroof - [Link target (target-id 319559-) not found]
B19ED	Sunroof - [Link target (target-id 319559-) not found]
B19EE	Sunroof - [Link target (target-id 319560-) not found]
B19EF	Sunroof - [Link target (target-id 319560-) not found]
B19F2	Steering Wheel and Column - [Link target (target-id 317603-) not found]
B19F4	Starting, Charging, and Low Voltage Energy Storage - [Link target (target-id 314836-) not found]
B19F6	Theft Deterrent - [Link target (target-id 320490-) not found]
B1A04	Driver Assistance Systems - [Link target (target-id 310121-) not found]
B1A05	Driver Assistance Systems - [Link target (target-id 310122-) not found]
B1A11	Data Communications - [Link target (target-id 317017-) not found]
B1A1B	Data Communications - [Link target (target-id 297097-) not found]
B1A1D	Data Communications - [Link target (target-id 317028-) not found]
B1A1F	Data Communications - [Link target (target-id 317030-) not found]
B1A21	Data Communications - [Link target (target-id 317032-) not found]
B1A2C	HVAC - Automatic - [Link target (target-id 347808-) not found]
B1A2F	Lighting - [Link target (target-id 317490-) not found]
B1A30	Parking Assistance Systems - [Link target (target-id 317616-) not found]
B1A33	Supplemental Restraints - [Link target (target-id 313892-) not found]
B1A34	Supplemental Restraints - [Link target (target-id 317293-) not found]
B1A35	Supplemental Restraints - [Link target (target-id 317294-) not found]
B1A37	Secondary and Configurable Customer Controls - [Link target (target-id 323237-) not found]
B1A4B	Power Outlets - [Link target (target-id 338328-) not found]

DTC	Diagnostic Procedure
B1A4C	Steering Wheel and Column - [Link target (target-id 317604-) not found]
B1A57	Interior Trim and Paneling - [Link target (target-id 321209-) not found]
B1A5E	Image Display Cameras - [Link target (target-id 319520-) not found]
B1A61	Cellular, Entertainment, and Navigation - [Link target (target-id 353705-) not found]
B1A65	Power Seats - [Link target (target-id 317277-) not found]
B1A66	Power Seats - [Link target (target-id 317277-) not found]
B1A67	Power Seats - [Link target (target-id 317277-) not found]
B1A6D	Trailering Systems - [Link target (target-id 325945-) not found]
B1A6E	Trailering Systems - [Link target (target-id 325945-) not found]
B1A6F	Trailering Systems - [Link target (target-id 325948-) not found]
B1A70	Trailering Systems - [Link target (target-id 325948-) not found]
B1A71	Trailering Systems - [Link target (target-id 325949-) not found]
B1A72	Trailering Systems - [Link target (target-id 325950-) not found]
B1A73	Trailering Systems - [Link target (target-id 325951-) not found]
B1A75	Trailering Systems - [Link target (target-id 325953-) not found]
B1A76	Wiring Systems and Power Management - [Link target (target-id 317723-) not found]
B1A78	Power Outlets - [Link target (target-id 331014-) not found]
B1A79	Power Outlets - [Link target (target-id 338329-) not found]
B1A7A	Supplemental Restraints - [Link target (target-id 317295-) not found]
B1A84	Power Seats - [Link target (target-id 324035-) not found]
B1A85	Power Seats - [Link target (target-id 324035-) not found]
B1A91	Cellular, Entertainment, and Navigation - [Link target (target-id 323932-) not found]
B1A95	Cellular, Entertainment, and Navigation - [Link target (target-id 323936-) not found]
B1A96	Cellular, Entertainment, and Navigation - [Link target (target-id 323936-) not found]
B1A99	Cellular, Entertainment, and Navigation - [Link target (target-id 323938-) not found]
B1A9A	Cellular, Entertainment, and Navigation - [Link target (target-id 323938-) not found]
B1AA0	Power Seats - [Link target (target-id 327688-) not found]
B1AA3	Wiring Systems and Power Management - [Link target (target-id 313605-) not found]
B1AB0	Trailering Systems - [Link target (target-id 325955-) not found]
B1AB1	Wipers and Washers - [Link target (target-id 327631-) not found]
B1ABB	Vehicle Access - [Link target (target-id 325883-) not found]
B1ABC	Vehicle Access - [Link target (target-id 325883-) not found]
B1AC2	Wiring Systems and Power Management - [Link target (target-id 313601-) not found]
B1AC3	Wiring Systems and Power Management - [Link target (target-id 313602-) not found]
B1AD0	Starting, Charging, and Low Voltage Energy Storage - [Link target (target-id 327526-) not found]
B1AD2	Seat Belts - [Link target (target-id 330173-) not found]
B1AD3	Seat Belts - [Link target (target-id 317300-) not found]
B1ADC	Instrument Panel and Console Trim - [Link target (target-id 327236-) not found]
B1ADD	Seat Heating and Cooling - [Link target (target-id 327567-) not found]
B1ADE	Seat Heating and Cooling - [Link target (target-id 327567-) not found]
B1ADF	Remote Functions - [Link target (target-id 319790-) not found]
B1AE1	Cellular, Entertainment, and Navigation - [Link target (target-id 318801-) not found]

DTC	Diagnostic Procedure
B1AE2	Cellular, Entertainment, and Navigation - [Link target (target-id 318801-) not found]
B1AE3	Cellular, Entertainment, and Navigation - [Link target (target-id 318801-) not found]
B1AE6	Supplemental Restraints - [Link target (target-id 335228-) not found]
B1AEE	Remote Functions - [Link target (target-id 319791-) not found]
B1B01	Cellular, Entertainment, and Navigation - [Link target (target-id 325185-) not found]
B1B02	Cellular, Entertainment, and Navigation - [Link target (target-id 325185-) not found]
B1B09	Vehicle Access - [Link target (target-id 349840-) not found]
B1B0A	Frame and Underbody - [Link target (target-id 325180-) not found]
B1B0B	Frame and Underbody - [Link target (target-id 325180-) not found]
B1B0C	Lighting - [Link target (target-id 329962-) not found]
B1B0D	Lighting - [Link target (target-id 329962-) not found]
B1B12	Wiring Systems and Power Management - [Link target (target-id 317724-) not found]
B1B15	Wiring Systems and Power Management - [Link target (target-id 317726-) not found]
B1B16	Instrument Panel and Console Trim - [Link target (target-id 327237-) not found]
B1B19	Cellular, Entertainment, and Navigation - [Link target (target-id 319001-) not found]
B1B1A	Power Seats - [Link target (target-id 327689-) not found]
B1B1B	Power Seats - [Link target (target-id 327689-) not found]
B1B1E	Instrument Panel and Console Trim - [Link target (target-id 327238-) not found]
B1B24	Driver Monitoring and Occupant Detection - [Link target (target-id 327977-) not found]
B1B25	Power Seats - [Link target (target-id 327690-) not found]
B1B26	Power Seats - [Link target (target-id 327690-) not found]
B1B27	Power Seats - [Link target (target-id 327690-) not found]
B1B28	Power Seats - [Link target (target-id 327690-) not found]
B1B2D	Power Seats - [Link target (target-id 327692-) not found]
B1B2E	Power Seats - [Link target (target-id 327692-) not found]
B1B31	Cellular, Entertainment, and Navigation - [Link target (target-id 327983-) not found]
B1B35	Instrument Panel and Console Trim - [Link target (target-id 327239-) not found]
B1B36	Cellular, Entertainment, and Navigation - [Link target (target-id 327128-) not found]
B1B38	Driver Assistance Systems - [Link target (target-id 320653-) not found]
B1B39	Driver Assistance Systems - [Link target (target-id 320654-) not found]
B1B3A	Driver Assistance Systems - [Link target (target-id 320655-) not found]
B1B3B	Driver Assistance Systems - [Link target (target-id 320656-) not found]
B1B3C	Driver Assistance Systems - [Link target (target-id 320657-) not found]
B1B42	Wiring Systems and Power Management - [Link target (target-id 322002-) not found]
B1B43	Driver Assistance Systems - [Link target (target-id 328987-) not found]
B1B44	Driver Assistance Systems - [Link target (target-id 328988-) not found]
B1B45	Driver Assistance Systems - [Link target (target-id 328989-) not found]
B1B46	Driver Assistance Systems - [Link target (target-id 328990-) not found]
B1B47	Driver Assistance Systems - [Link target (target-id 328991-) not found]
B1B48	Driver Assistance Systems - [Link target (target-id 328992-) not found]
B1B49	Driver Assistance Systems - [Link target (target-id 328993-) not found]
B1B4A	Driver Assistance Systems - [Link target (target-id 328994-) not found]

DTC	Diagnostic Procedure
B1B4F	Image Display Cameras - [Link target (target-id 332634-) not found]
B1B55	Trailering Systems - [Link target (target-id 325956-) not found]
B1B56	Trailering Systems - [Link target (target-id 325958-) not found]
B1B57	Trailering Systems - [Link target (target-id 325958-) not found]
B1B58	Trailering Systems - [Link target (target-id 325960-) not found]
B1B65	Driver Assistance Systems - [Link target (target-id 328995-) not found]
B1B66	Driver Assistance Systems - [Link target (target-id 328995-) not found]
B1B77	Data Communications - [Link target (target-id 324200-) not found]
B1B83	Trailering Systems - [Link target (target-id 325961-) not found]
B1BA5	Driver Assistance Systems - [Link target (target-id 328996-) not found]
B1BA6	Cellular, Entertainment, and Navigation - [Link target (target-id 349175-) not found]
B1BA7	Cellular, Entertainment, and Navigation - [Link target (target-id 338829-) not found]
B1BAA	Cellular, Entertainment, and Navigation - [Link target (target-id 338829-) not found]
B1BAB	Cellular, Entertainment, and Navigation - [Link target (target-id 338829-) not found]
B1BB3	Driver Assistance Systems - [Link target (target-id 328997-) not found]
B1BB5	Trailering Systems - [Link target (target-id 325943-) not found]
B1BB6	Wiring Systems and Power Management - [Link target (target-id 332638-) not found]
B1BE7	Lighting - [Link target (target-id 340107-) not found]
B1BE8	Lighting - [Link target (target-id 340107-) not found]
B1BE9	Lighting - [Link target (target-id 334921-) not found]
B1BEA	Lighting - [Link target (target-id 334922-) not found]
B1BEC	Driver Monitoring and Occupant Detection - [Link target (target-id 327978-) not found]
B1BED	Driver Monitoring and Occupant Detection - [Link target (target-id 327986-) not found]
B1C09	Starting, Charging, and Low Voltage Energy Storage - [Link target (target-id 200414-) not found]
B1C0A	Vehicle Access - [Link target (target-id 325974-) not found]
B1C4A	Displays and Gauges - [Link target (target-id 341722-) not found]
B1C4C	Displays and Gauges - [Link target (target-id 341724-) not found]
B1C4D	Displays and Gauges - [Link target (target-id 341725-) not found]
B1C57	Vehicle Access - [Link target (target-id 333039-) not found]
B1C6D	Starting, Charging, and Low Voltage Energy Storage - [Link target (target-id 348709-) not found]
B1C9F	Displays and Gauges - [Link target (target-id 341728-) not found]
B1CA2	Cellular, Entertainment, and Navigation - [Link target (target-id 345316-) not found]
B1CA3	Displays and Gauges - [Link target (target-id 345258-) not found]
B1CC6	Wiring Systems and Power Management - [Link target (target-id 348761-) not found]
B1CC7	Wiring Systems and Power Management - [Link target (target-id 348761-) not found]
B1CC8	Wiring Systems and Power Management - [Link target (target-id 348761-) not found]
B1CC9	Wiring Systems and Power Management - [Link target (target-id 348761-) not found]
B1CCA	Wiring Systems and Power Management - [Link target (target-id 348761-) not found]
B1CCB	Wiring Systems and Power Management - [Link target (target-id 348761-) not found]
B1CCC	Wiring Systems and Power Management - [Link target (target-id 348761-) not found]
B1CCD	Wiring Systems and Power Management - [Link target (target-id 348761-) not found]
B1CCE	Wiring Systems and Power Management - [Link target (target-id 348761-) not found]

DTC	Diagnostic Procedure
B1CCF	Wiring Systems and Power Management - [Link target (target-id 348761-) not found]
B1CD0	Wiring Systems and Power Management - [Link target (target-id 348761-) not found]
B1CD1	Wiring Systems and Power Management - [Link target (target-id 348761-) not found]
B1CD2	Wiring Systems and Power Management - [Link target (target-id 348761-) not found]
B1CD3	Wiring Systems and Power Management - [Link target (target-id 348761-) not found]
B1CD4	Wiring Systems and Power Management - [Link target (target-id 348761-) not found]
B1CD5	Wiring Systems and Power Management - [Link target (target-id 348761-) not found]
B1CD6	Wiring Systems and Power Management - [Link target (target-id 348761-) not found]
B1CD7	Wiring Systems and Power Management - [Link target (target-id 348761-) not found]
B1CD8	Wiring Systems and Power Management - [Link target (target-id 348761-) not found]
B1CD9	Wiring Systems and Power Management - [Link target (target-id 348761-) not found]
B1CDA	Wiring Systems and Power Management - [Link target (target-id 348761-) not found]
B1CDB	Wiring Systems and Power Management - [Link target (target-id 348761-) not found]
B1CDC	Wiring Systems and Power Management - [Link target (target-id 348761-) not found]
B1CDD	Wiring Systems and Power Management - [Link target (target-id 348761-) not found]
B1CDE	Wiring Systems and Power Management - [Link target (target-id 348761-) not found]
B1CDF	Wiring Systems and Power Management - [Link target (target-id 348761-) not found]
B1CE0	Wiring Systems and Power Management - [Link target (target-id 348761-) not found]
B1CE1	Wiring Systems and Power Management - [Link target (target-id 348761-) not found]
B1CE2	Wiring Systems and Power Management - [Link target (target-id 348761-) not found]
B1CE3	Wiring Systems and Power Management - [Link target (target-id 348761-) not found]
B1D3B	Data Communications - [Link target (target-id 335075-) not found]
B1D3C	Remote Functions - [Link target (target-id 333386-) not found]
B1D3D	Remote Functions - [Link target (target-id 333387-) not found]
B1D3E	Remote Functions - [Link target (target-id 333388-) not found]
B1D3F	Remote Functions - [Link target (target-id 333389-) not found]
B1D40	Remote Functions - [Link target (target-id 333390-) not found]
B1D44	Remote Functions - [Link target (target-id 333394-) not found]
B1D71	Displays and Gauges - [Link target (target-id 348029-) not found]
B1D73	Displays and Gauges - [Link target (target-id 348029-) not found]
B1D74	Displays and Gauges - [Link target (target-id 348029-) not found]
B1D75	Displays and Gauges - [Link target (target-id 353826-) not found]
B1D76	Displays and Gauges - [Link target (target-id 353827-) not found]
B1D77	Displays and Gauges - [Link target (target-id 341732-) not found]
B1DD0	Driver Assistance Systems - [Link target (target-id 345919-) not found]
B1E3E	Driver Assistance Systems - [Link target (target-id 345920-) not found]
B1EBB	Vehicle Access - [Link target (target-id 354307-) not found]
B1EEF	Remote Functions - [Link target (target-id 348421-) not found]
B2A36	HVAC - Automatic - [Link target (target-id 320829-) not found]
B2A37	HVAC - Automatic - [Link target (target-id 320829-) not found]
B2A38	HVAC - Automatic - [Link target (target-id 320829-) not found]
B2A39	HVAC - Automatic - [Link target (target-id 320829-) not found]

DTC	Diagnostic Procedure
B2A3E	HVAC - Automatic - [Link target (target-id 320831-) not found]
B2A3F	HVAC - Automatic - [Link target (target-id 320831-) not found]
B2A40	HVAC - Automatic - [Link target (target-id 320831-) not found]
B2A41	HVAC - Automatic - [Link target (target-id 320831-) not found]
B2A42	HVAC - Automatic - [Link target (target-id 320832-) not found]
B2A43	HVAC - Automatic - [Link target (target-id 320832-) not found]
B2A44	HVAC - Automatic - [Link target (target-id 320832-) not found]
B2A45	HVAC - Automatic - [Link target (target-id 320832-) not found]
B2A67	HVAC - Automatic - [Link target (target-id 320842-) not found]
B2A68	HVAC - Automatic - [Link target (target-id 320842-) not found]
B2A69	HVAC - Automatic - [Link target (target-id 320842-) not found]
B2A6A	HVAC - Automatic - [Link target (target-id 320842-) not found]
B2A6B	HVAC - Automatic - [Link target (target-id 320843-) not found]
B2A6C	HVAC - Automatic - [Link target (target-id 320843-) not found]
B2A6D	HVAC - Automatic - [Link target (target-id 320843-) not found]
B2A6E	HVAC - Automatic - [Link target (target-id 320843-) not found]
B2A73	HVAC - Automatic - [Link target (target-id 320845-) not found]
B2A74	HVAC - Automatic - [Link target (target-id 320845-) not found]
B2A75	HVAC - Automatic - [Link target (target-id 320845-) not found]
B2A76	HVAC - Automatic - [Link target (target-id 320845-) not found]
B2A87	HVAC - Automatic - [Link target (target-id 320850-) not found]
B2A88	HVAC - Automatic - [Link target (target-id 320850-) not found]
B2A89	HVAC - Automatic - [Link target (target-id 320850-) not found]
B2A8A	HVAC - Automatic - [Link target (target-id 320850-) not found]
B2A8B	HVAC - Automatic - [Link target (target-id 320851-) not found]
B2A8C	HVAC - Automatic - [Link target (target-id 320851-) not found]
B2A8D	HVAC - Automatic - [Link target (target-id 320851-) not found]
B2A8E	HVAC - Automatic - [Link target (target-id 320851-) not found]
B2A93	HVAC - Automatic - [Link target (target-id 320853-) not found]
B2A94	HVAC - Automatic - [Link target (target-id 320853-) not found]
B2A95	HVAC - Automatic - [Link target (target-id 320853-) not found]
B2A96	HVAC - Automatic - [Link target (target-id 320853-) not found]
B2A97	HVAC - Automatic - [Link target (target-id 320854-) not found]
B2A98	HVAC - Automatic - [Link target (target-id 320854-) not found]
B2A99	HVAC - Automatic - [Link target (target-id 320854-) not found]
B2A9A	HVAC - Automatic - [Link target (target-id 320854-) not found]
B2AEF	HVAC - Automatic - [Link target (target-id 317704-) not found]
B2AF0	HVAC - Automatic - [Link target (target-id 317704-) not found]
B2AF1	HVAC - Automatic - [Link target (target-id 317704-) not found]
B2AF2	HVAC - Automatic - [Link target (target-id 317704-) not found]
B2AF3	HVAC - Automatic - [Link target (target-id 317704-) not found]
B2AF4	HVAC - Automatic - [Link target (target-id 317704-) not found]

DTC	Diagnostic Procedure
B2AF5	HVAC - Automatic - [Link target (target-id 317705-) not found]
B2AF6	HVAC - Automatic - [Link target (target-id 317705-) not found]
B2AF7	HVAC - Automatic - [Link target (target-id 317705-) not found]
B2AF8	HVAC - Automatic - [Link target (target-id 317705-) not found]
B2AF9	HVAC - Automatic - [Link target (target-id 317705-) not found]
B2AFA	HVAC - Automatic - [Link target (target-id 317705-) not found]
B2AFB	HVAC - Automatic - [Link target (target-id 317706-) not found]
B2AFC	HVAC - Automatic - [Link target (target-id 317706-) not found]
B2AFD	HVAC - Automatic - [Link target (target-id 317706-) not found]
B2AFE	HVAC - Automatic - [Link target (target-id 317706-) not found]
B2AFF	HVAC - Automatic - [Link target (target-id 321874-) not found]
B2B00	HVAC - Automatic - [Link target (target-id 321874-) not found]
B2B01	HVAC - Automatic - [Link target (target-id 321874-) not found]
B2B02	HVAC - Automatic - [Link target (target-id 317701-) not found]
B2B03	HVAC - Automatic - [Link target (target-id 317701-) not found]
B2B05	HVAC - Automatic - [Link target (target-id 321289-) not found]
B2B06	HVAC - Automatic - [Link target (target-id 321290-) not found]
B2B07	HVAC - Automatic - [Link target (target-id 321291-) not found]
B2B09	HVAC - Automatic - [Link target (target-id 321293-) not found]
B2B0B	HVAC - Automatic - [Link target (target-id 317701-) not found]
B2B0C	HVAC - Automatic - [Link target (target-id 317701-) not found]
B2B11	Starting, Charging, and Low Voltage Energy Storage - [Link target (target-id 303006-) not found]
B2B22	HVAC - Automatic - [Link target (target-id 321291-) not found]
B2B23	HVAC - Automatic - [Link target (target-id 321291-) not found]
B2B24	HVAC - Automatic - [Link target (target-id 321291-) not found]
B2B28	HVAC - Automatic - [Link target (target-id 321289-) not found]
B2B29	HVAC - Automatic - [Link target (target-id 321289-) not found]
B2B2A	HVAC - Automatic - [Link target (target-id 321289-) not found]
B2B2B	HVAC - Automatic - [Link target (target-id 321290-) not found]
B2B2C	HVAC - Automatic - [Link target (target-id 321290-) not found]
B2B2D	HVAC - Automatic - [Link target (target-id 321290-) not found]
B2B2E	HVAC - Automatic - [Link target (target-id 321293-) not found]
B2B2F	HVAC - Automatic - [Link target (target-id 321293-) not found]
B2B30	HVAC - Automatic - [Link target (target-id 321293-) not found]
B2B79	HVAC - Automatic - [Link target (target-id 347410-) not found]
B2B7A	HVAC - Automatic - [Link target (target-id 347410-) not found]
B2B7B	HVAC - Automatic - [Link target (target-id 347410-) not found]
B2B85	HVAC - Automatic - [Link target (target-id 347409-) not found]
B2B86	HVAC - Automatic - [Link target (target-id 347409-) not found]
B2B87	HVAC - Automatic - [Link target (target-id 347409-) not found]
B2B8B	HVAC - Automatic - [Link target (target-id 347409-) not found]
B2B8D	HVAC - Automatic - [Link target (target-id 347410-) not found]

DTC	Diagnostic Procedure
B2B9B	Electronic Transmission Range Select - [Link target (target-id 326138-) not found]
B2BA1	Driver Assistance Systems - [Link target (target-id 328998-) not found]
B2BC2	HVAC - Automatic - [Link target (target-id 345901-) not found]
B2BC3	HVAC - Automatic - [Link target (target-id 345901-) not found]
B2BC4	HVAC - Automatic - [Link target (target-id 345901-) not found]
B2BCC	Cellular, Entertainment, and Navigation - [Link target (target-id 345999-) not found]
B2BCD	Cellular, Entertainment, and Navigation - [Link target (target-id 348881-) not found]
B3623	Cruise Control - [Link target (target-id 226319-) not found]
B3794	Cruise Control - [Link target (target-id 226319-) not found]
C0001	Antilock Brake System - [Link target (target-id 261542-) not found]
C0002	Antilock Brake System - [Link target (target-id 261542-) not found]
C0003	Antilock Brake System - [Link target (target-id 261542-) not found]
C0004	Antilock Brake System - [Link target (target-id 261542-) not found]
C0010	Antilock Brake System - [Link target (target-id 261542-) not found]
C0011	Antilock Brake System - [Link target (target-id 261542-) not found]
C0014	Antilock Brake System - [Link target (target-id 261542-) not found]
C0015	Antilock Brake System - [Link target (target-id 261542-) not found]
C0018	Antilock Brake System - [Link target (target-id 261542-) not found]
C0019	Antilock Brake System - [Link target (target-id 261542-) not found]
C001C	Antilock Brake System - [Link target (target-id 261542-) not found]
C001D	Antilock Brake System - [Link target (target-id 261542-) not found]
C0021	Hydraulic Brakes - [Link target (target-id 301649-) not found]
C0024	Antilock Brake System - [Link target (target-id 127367-) not found]
C003F	Antilock Brake System - [Link target (target-id 310825-) not found]
C0049	Hydraulic Brakes - [Link target (target-id 301650-) not found]
C004B	Hydraulic Brakes - [Link target (target-id 325748-) not found]
C0051	Antilock Brake System - [Link target (target-id 1508-) not found]
C0051	Power Steering - [Link target (target-id 297198-) not found]
C0061	Antilock Brake System - [Link target (target-id 309335-) not found]
C0061	Driver Assistance Systems - [Link target (target-id 328999-) not found]
C0062	Antilock Brake System - [Link target (target-id 309335-) not found]
C0062	Driver Assistance Systems - [Link target (target-id 328999-) not found]
C0063	Antilock Brake System - [Link target (target-id 309335-) not found]
C0063	Driver Assistance Systems - [Link target (target-id 328999-) not found]
C006A	Supplemental Restraints - [Link target (target-id 329408-) not found]
C0072	Disc Brakes - [Link target (target-id 310755-) not found]
C00C4	Driver Assistance Systems - [Link target (target-id 354941-) not found]
C00C5	Driver Assistance Systems - [Link target (target-id 354942-) not found]
C0500	Antilock Brake System - [Link target (target-id 272224-) not found]
C0501	Antilock Brake System - [Link target (target-id 272224-) not found]
C0502	Antilock Brake System - [Link target (target-id 272224-) not found]
C0503	Antilock Brake System - [Link target (target-id 272224-) not found]

DTC	Diagnostic Procedure
C0504	Antilock Brake System - [Link target (target-id 272224-) not found]
C0505	Antilock Brake System - [Link target (target-id 302672-) not found]
C0506	Antilock Brake System - [Link target (target-id 272224-) not found]
C0507	Antilock Brake System - [Link target (target-id 272224-) not found]
C0508	Antilock Brake System - [Link target (target-id 272224-) not found]
C0509	Antilock Brake System - [Link target (target-id 272224-) not found]
C050A	Antilock Brake System - [Link target (target-id 272224-) not found]
C050B	Antilock Brake System - [Link target (target-id 302672-) not found]
C050C	Antilock Brake System - [Link target (target-id 272224-) not found]
C050D	Antilock Brake System - [Link target (target-id 272224-) not found]
C050E	Antilock Brake System - [Link target (target-id 272224-) not found]
C050F	Antilock Brake System - [Link target (target-id 272224-) not found]
C0510	Antilock Brake System - [Link target (target-id 272224-) not found]
C0511	Antilock Brake System - [Link target (target-id 302672-) not found]
C0512	Antilock Brake System - [Link target (target-id 272224-) not found]
C0513	Antilock Brake System - [Link target (target-id 272224-) not found]
C0514	Antilock Brake System - [Link target (target-id 272224-) not found]
C0515	Antilock Brake System - [Link target (target-id 272224-) not found]
C0516	Antilock Brake System - [Link target (target-id 272224-) not found]
C0517	Antilock Brake System - [Link target (target-id 302672-) not found]
C0520	Driver Assistance Systems - [Link target (target-id 329000-) not found]
C052A	Power Steering - [Link target (target-id 333347-) not found]
C053B	Antilock Brake System - [Link target (target-id 307000-) not found]
C053D	Antilock Brake System - [Link target (target-id 302608-) not found]
C053E	Antilock Brake System - [Link target (target-id 302608-) not found]
C053F	Antilock Brake System - [Link target (target-id 302608-) not found]
C0546	Data Communications - [Link target (target-id 332895-) not found]
C0551	Antilock Brake System - [Link target (target-id 309335-) not found]
C0552	Antilock Brake System - [Link target (target-id 332586-) not found]
C0553	Antilock Brake System - [Link target (target-id 332586-) not found]
C0554	Antilock Brake System - [Link target (target-id 332586-) not found]
C0555	Antilock Brake System - [Link target (target-id 272226-) not found]
C0556	Antilock Brake System - [Link target (target-id 272226-) not found]
C0557	Antilock Brake System - [Link target (target-id 272226-) not found]
C0558	Antilock Brake System - [Link target (target-id 272226-) not found]
C055F	Hydraulic Brakes - [Link target (target-id 310747-) not found]
C0560	Antilock Brake System - [Link target (target-id 272227-) not found]
C0571	Antilock Brake System - [Link target (target-id 272228-) not found]
C0572	Antilock Brake System - [Link target (target-id 272228-) not found]
C0574	Antilock Brake System - [Link target (target-id 272228-) not found]
C0579	Hydraulic Brakes - [Link target (target-id 351764-) not found]
C057A	Hydraulic Brakes - [Link target (target-id 351764-) not found]

DTC	Diagnostic Procedure
C057D	Hydraulic Brakes - [Link target (target-id 351764-) not found]
C057F	Hydraulic Brakes - [Link target (target-id 327694-) not found]
C0580	Hydraulic Brakes - [Link target (target-id 327694-) not found]
C0582	Hydraulic Brakes - [Link target (target-id 327694-) not found]
C058A	Hydraulic Brakes - [Link target (target-id 301767-) not found]
C058E	Hydraulic Brakes - [Link target (target-id 301767-) not found]
C0590	Hydraulic Brakes - [Link target (target-id 327694-) not found]
C0591	Hydraulic Brakes - [Link target (target-id 327694-) not found]
C0594	Hydraulic Brakes - [Link target (target-id 301767-) not found]
C0595	Hydraulic Brakes - [Link target (target-id 301767-) not found]
C0596	Hydraulic Brakes - [Link target (target-id 301767-) not found]
C059B	Antilock Brake System - [Link target (target-id 272227-) not found]
C05A3	Antilock Brake System - [Link target (target-id 272230-) not found]
C05A4	Antilock Brake System - [Link target (target-id 272230-) not found]
C05B0	Hydraulic Brakes - [Link target (target-id 310748-) not found]
C05BB	Hydraulic Brakes - [Link target (target-id 312947-) not found]
C05C2	Hydraulic Brakes - [Link target (target-id 301670-) not found]
C05CA	Antilock Brake System - [Link target (target-id 313906-) not found]
C05CB	Antilock Brake System - [Link target (target-id 313906-) not found]
C05CC	Antilock Brake System - [Link target (target-id 310826-) not found]
C05CF	Antilock Brake System - [Link target (target-id 310826-) not found]
C05D0	Antilock Brake System - [Link target (target-id 302614-) not found]
C05D1	Antilock Brake System - [Link target (target-id 302615-) not found]
C05D2	Antilock Brake System - [Link target (target-id 302616-) not found]
C05D3	Antilock Brake System - [Link target (target-id 302617-) not found]
C05D4	Antilock Brake System - [Link target (target-id 302618-) not found]
C05D5	Antilock Brake System - [Link target (target-id 302619-) not found]
C05D6	Power Steering - [Link target (target-id 333345-) not found]
C05DD	Transfer Case - MP 3015 - [Link target (target-id 325241-) not found]
C05DD	Transfer Case - MP 3025 - [Link target (target-id 325245-) not found]
C05FB	Transfer Case - MP 3015 - [Link target (target-id 300826-) not found]
C05FB	Transfer Case - MP 3025 - [Link target (target-id 300827-) not found]
C05FF	Transfer Case - MP 3015 - [Link target (target-id 306748-) not found]
C05FF	Transfer Case - MP 3025 - [Link target (target-id 306749-) not found]
C0605	Power Steering - [Link target (target-id 350265-) not found]
C0609	Park Brake - [Link target (target-id 302982-) not found]
C060B	Park Brake - [Link target (target-id 306987-) not found]
C0610	Park Brake - [Link target (target-id 306988-) not found]
C0616	Park Brake - [Link target (target-id 301674-) not found]
C0632	Transfer Case - MP 3015 - [Link target (target-id 347186-) not found]
C0632	Transfer Case - MP 3025 - [Link target (target-id 347187-) not found]
C0697	Antilock Brake System - [Link target (target-id 332586-) not found]

DTC	Diagnostic Procedure
C0698	Antilock Brake System - [Link target (target-id 332586-) not found]
C0699	Antilock Brake System - [Link target (target-id 332586-) not found]
C102E	Suspension Controls - [Link target (target-id 316882-) not found]
C1030	Suspension Controls - [Link target (target-id 316882-) not found]
C1031	Suspension Controls - [Link target (target-id 316882-) not found]
C1032	Suspension Controls - [Link target (target-id 316882-) not found]
C1034	Suspension Controls - [Link target (target-id 316883-) not found]
C1035	Suspension Controls - [Link target (target-id 316883-) not found]
C1036	Suspension Controls - [Link target (target-id 316883-) not found]
C1037	Suspension Controls - [Link target (target-id 316883-) not found]
C103C	Suspension Controls - [Link target (target-id 324295-) not found]
C103D	Suspension Controls - [Link target (target-id 324295-) not found]
C103E	Suspension Controls - [Link target (target-id 324295-) not found]
C103F	Suspension Controls - [Link target (target-id 324295-) not found]
C1058	Rear Drive Axle - [Link target (target-id 361724-) not found]
C1060	Rear Drive Axle - [Link target (target-id 361724-) not found]
C107D	Antilock Brake System - [Link target (target-id 320571-) not found]
C10A6	Rear Drive Axle - [Link target (target-id 316887-) not found]
C10A7	Rear Drive Axle - [Link target (target-id 361724-) not found]
C10BA	Transfer Case - MP 3015 - [Link target (target-id 325242-) not found]
C10BA	Transfer Case - MP 3025 - [Link target (target-id 325246-) not found]
C10CE	Steering Wheel and Column - [Link target (target-id 317605-) not found]
C10DA	Lighting - [Link target (target-id 317493-) not found]
C10EE	Antilock Brake System - [Link target (target-id 304967-) not found]
C1114	Trailering Systems - [Link target (target-id 325998-) not found]
C1119	Power Steering - [Link target (target-id 313799-) not found]
C111A	Rear Drive Axle - [Link target (target-id 316890-) not found]
C111B	Rear Drive Axle - [Link target (target-id 316891-) not found]
C1122	Antilock Brake System - [Link target (target-id 171102-) not found]
C1123	Antilock Brake System - [Link target (target-id 171102-) not found]
C1133	Frame and Underbody - [Link target (target-id 325183-) not found]
C1134	Frame and Underbody - [Link target (target-id 325183-) not found]
C1135	Rear Drive Axle - [Link target (target-id 316892-) not found]
C1136	Rear Drive Axle - [Link target (target-id 321706-) not found]
C1137	Rear Drive Axle - [Link target (target-id 321706-) not found]
C1146	Power Steering - [Link target (target-id 297201-) not found]
C114F	Steering Wheel and Column - [Link target (target-id 347270-) not found]
C1158	Trailering Systems - [Link target (target-id 326009-) not found]
C1159	Steering Wheel and Column - [Link target (target-id 317607-) not found]
C115E	Transfer Case - MP 3015 - [Link target (target-id 325249-) not found]
C115E	Transfer Case - MP 3025 - [Link target (target-id 325247-) not found]
C1162	Transfer Case - MP 3015 - [Link target (target-id 309959-) not found]

DTC	Diagnostic Procedure
C1162	Transfer Case - MP 3025 - [Link target (target-id 309874-) not found]
C1167	Rear Drive Axle - [Link target (target-id 316895-) not found]
C1168	Power Steering - [Link target (target-id 317736-) not found]
C116A	Power Steering - [Link target (target-id 317738-) not found]
C116B	Disc Brakes - [Link target (target-id 301556-) not found]
C116C	Disc Brakes - [Link target (target-id 301557-) not found]
C116D	Tire Pressure Monitoring - [Link target (target-id 313635-) not found]
C116E	Transfer Case - MP 3015 - [Link target (target-id 325244-) not found]
C116E	Transfer Case - MP 3025 - [Link target (target-id 325248-) not found]
C116F	Transfer Case - MP 3015 - [Link target (target-id 325242-) not found]
C116F	Transfer Case - MP 3025 - [Link target (target-id 325246-) not found]
C1170	Transfer Case - MP 3015 - [Link target (target-id 325249-) not found]
C1170	Transfer Case - MP 3025 - [Link target (target-id 325247-) not found]
C1171	Tire Pressure Monitoring - [Link target (target-id 314982-) not found]
C1172	Tire Pressure Monitoring - [Link target (target-id 314982-) not found]
C1173	Tire Pressure Monitoring - [Link target (target-id 314982-) not found]
C1174	Tire Pressure Monitoring - [Link target (target-id 314982-) not found]
C1175	Suspension Controls - [Link target (target-id 324276-) not found]
C1176	Suspension Controls - [Link target (target-id 324277-) not found]
C1178	Steering Wheel and Column - [Link target (target-id 315482-) not found]
C1180	Frame and Underbody - [Link target (target-id 328943-) not found]
C1181	Frame and Underbody - [Link target (target-id 328943-) not found]
C1182	Frame and Underbody - [Link target (target-id 328943-) not found]
C1183	Frame and Underbody - [Link target (target-id 328943-) not found]
C1184	Suspension Controls - [Link target (target-id 324296-) not found]
C1187	Suspension Controls - [Link target (target-id 324297-) not found]
C1188	Suspension Controls - [Link target (target-id 324297-) not found]
C1189	Suspension Controls - [Link target (target-id 324297-) not found]
C118A	Suspension Controls - [Link target (target-id 324297-) not found]
C118B	Suspension Controls - [Link target (target-id 324297-) not found]
C118C	Suspension Controls - [Link target (target-id 324297-) not found]
C118D	Transfer Case - MP 3015 - [Link target (target-id 325242-) not found]
C118D	Transfer Case - MP 3025 - [Link target (target-id 325246-) not found]
C118E	Suspension Controls - [Link target (target-id 324297-) not found]
C118F	Suspension Controls - [Link target (target-id 324297-) not found]
C1190	Suspension Controls - [Link target (target-id 324297-) not found]
C1191	Suspension Controls - [Link target (target-id 324297-) not found]
C1192	Suspension Controls - [Link target (target-id 324297-) not found]
C1193	Suspension Controls - [Link target (target-id 324297-) not found]
C1194	Suspension Controls - [Link target (target-id 324298-) not found]
C1195	Suspension Controls - [Link target (target-id 324298-) not found]
C1196	Suspension Controls - [Link target (target-id 324299-) not found]

DTC	Diagnostic Procedure
C1197	Suspension Controls - [Link target (target-id 324298-) not found]
C119C	Transfer Case - MP 3015 - [Link target (target-id 325242-) not found]
C119C	Transfer Case - MP 3025 - [Link target (target-id 325246-) not found]
C119D	Suspension Controls - [Link target (target-id 338037-) not found]
C11A1	Power Steering - [Link target (target-id 333349-) not found]
C11A2	Power Steering - [Link target (target-id 333349-) not found]
C11A4	Transfer Case - MP 3015 - [Link target (target-id 300357-) not found]
C11A4	Transfer Case - MP 3025 - [Link target (target-id 300372-) not found]
C11A6	Power Steering - [Link target (target-id 333350-) not found]
C11A8	Power Steering - [Link target (target-id 333351-) not found]
C11AD	Transfer Case - MP 3015 - [Link target (target-id 300360-) not found]
C11AD	Transfer Case - MP 3025 - [Link target (target-id 300375-) not found]
C11B3	Transfer Case - MP 3015 - [Link target (target-id 300363-) not found]
C11B3	Transfer Case - MP 3025 - [Link target (target-id 300378-) not found]
C11B9	Transfer Case - MP 3015 - [Link target (target-id 300826-) not found]
C11B9	Transfer Case - MP 3025 - [Link target (target-id 300827-) not found]
C11BA	Rear Drive Axle - [Link target (target-id 361724-) not found]
C11BB	Rear Drive Axle - [Link target (target-id 361723-) not found]
C1201	Automatic Transmission - 10L80 - [Link target (target-id 312077-) not found]
C1211	Antilock Brake System - [Link target (target-id 1550-) not found]
C124F	Antilock Brake System - [Link target (target-id 228994-) not found]
C1250	Antilock Brake System - [Link target (target-id 228994-) not found]
C1251	Antilock Brake System - [Link target (target-id 228994-) not found]
C1252	Antilock Brake System - [Link target (target-id 267540-) not found]
C1253	Antilock Brake System - [Link target (target-id 267540-) not found]
C1254	Antilock Brake System - [Link target (target-id 267540-) not found]
C1280	Park Brake - [Link target (target-id 255091-) not found]
C1281	Park Brake - [Link target (target-id 255091-) not found]
C1304	Lighting - [Link target (target-id 317495-) not found]
C1445	Antilock Brake System - [Link target (target-id 272247-) not found]
C1595	Trailering Systems - [Link target (target-id 326013-) not found]
C1596	Trailering Systems - [Link target (target-id 326014-) not found]
C159C	Trailering Systems - [Link target (target-id 326015-) not found]
C159D	Trailering Systems - [Link target (target-id 326016-) not found]
C159E	Trailering Systems - [Link target (target-id 326016-) not found]
C159F	Trailering Systems - [Link target (target-id 326016-) not found]
C15A0	Trailering Systems - [Link target (target-id 326016-) not found]
C15A1	Trailering Systems - [Link target (target-id 326016-) not found]
C15A2	Trailering Systems - [Link target (target-id 326016-) not found]
C15A3	Parking Assistance Systems - [Link target (target-id 310221-) not found]
C15A6	Trailering Systems - [Link target (target-id 326017-) not found]
C15A9	Transfer Case - MP 3015 - [Link target (target-id 300363-) not found]

DTC	Diagnostic Procedure
C15A9	Transfer Case - MP 3025 - [Link target (target-id 300378-) not found]
C15AA	Transfer Case - MP 3015 - [Link target (target-id 300360-) not found]
C15AA	Transfer Case - MP 3025 - [Link target (target-id 300375-) not found]
C15AB	Transfer Case - MP 3015 - [Link target (target-id 300826-) not found]
C15AB	Transfer Case - MP 3025 - [Link target (target-id 300827-) not found]
C15AC	Transfer Case - MP 3015 - [Link target (target-id 306748-) not found]
C15AC	Transfer Case - MP 3025 - [Link target (target-id 306749-) not found]
C15C1	Transfer Case - MP 3015 - [Link target (target-id 300826-) not found]
C15C1	Transfer Case - MP 3025 - [Link target (target-id 300827-) not found]
C15C6	Antilock Brake System - [Link target (target-id 307843-) not found]
C15C7	Hydraulic Brakes - [Link target (target-id 310750-) not found]
C15D4	Antilock Brake System - [Link target (target-id 321957-) not found]
C2A01	Antilock Brake System - [Link target (target-id 310825-) not found]
C2A02	Antilock Brake System - [Link target (target-id 310825-) not found]
C2A03	Antilock Brake System - [Link target (target-id 310825-) not found]
C2A04	Antilock Brake System - [Link target (target-id 310825-) not found]
C2A07	Antilock Brake System - [Link target (target-id 302623-) not found]
C2A0A	Antilock Brake System - [Link target (target-id 324293-) not found]
C2A13	Antilock Brake System - [Link target (target-id 304969-) not found]
C2A14	Antilock Brake System - [Link target (target-id 304969-) not found]
C2A17	Hydraulic Brakes - [Link target (target-id 310751-) not found]
C2A1A	Antilock Brake System - [Link target (target-id 304970-) not found]
C2A1A	Hydraulic Brakes - [Link target (target-id 312948-) not found]
C2A1B	Hydraulic Brakes - [Link target (target-id 312949-) not found]
C2A1C	Hydraulic Brakes - [Link target (target-id 310752-) not found]
C2A1D	Park Brake - [Link target (target-id 303014-) not found]
C2A1E	Disc Brakes - [Link target (target-id 310756-) not found]
C2A21	Park Brake - [Link target (target-id 309644-) not found]
C2A22	Hydraulic Brakes - [Link target (target-id 310754-) not found]
C2A3B	Antilock Brake System - [Link target (target-id 311819-) not found]
P0010	Engine Controls and Fuel - 5.3L or 6.2L - [Link target (target-id 294312-) not found]
P0011	Engine Controls and Fuel - 5.3L or 6.2L - [Link target (target-id 294312-) not found]
P0016	Engine Controls and Fuel - 3.0L Diesel - [Link target (target-id 307167-) not found]
P0016	Engine Controls and Fuel - 5.3L or 6.2L - [Link target (target-id 228017-) not found]
P0030	Engine Controls and Fuel - 5.3L or 6.2L - [Link target (target-id 228057-) not found]
P0031	Engine Controls and Fuel - 5.3L or 6.2L - [Link target (target-id 228057-) not found]
P0032	Engine Controls and Fuel - 5.3L or 6.2L - [Link target (target-id 228057-) not found]
P0036	Engine Controls and Fuel - 5.3L or 6.2L - [Link target (target-id 228057-) not found]
P0037	Engine Controls and Fuel - 5.3L or 6.2L - [Link target (target-id 228057-) not found]
P0038	Engine Controls and Fuel - 5.3L or 6.2L - [Link target (target-id 228057-) not found]
P003A	Engine Controls and Fuel - 3.0L Diesel - [Link target (target-id 314843-) not found]
P0045	Engine Controls and Fuel - 3.0L Diesel - [Link target (target-id 347030-) not found]

DTC	Diagnostic Procedure
P0046	Engine Controls and Fuel - 3.0L Diesel - [Link target (target-id 335071-) not found]
P0047	Engine Controls and Fuel - 3.0L Diesel - [Link target (target-id 347030-) not found]
P0048	Engine Controls and Fuel - 3.0L Diesel - [Link target (target-id 347030-) not found]
P0050	Engine Controls and Fuel - 5.3L or 6.2L - [Link target (target-id 228057-) not found]
P0051	Engine Controls and Fuel - 5.3L or 6.2L - [Link target (target-id 228057-) not found]
P0052	Engine Controls and Fuel - 5.3L or 6.2L - [Link target (target-id 228057-) not found]
P0053	Engine Controls and Fuel - 5.3L or 6.2L - [Link target (target-id 228057-) not found]
P0054	Engine Controls and Fuel - 5.3L or 6.2L - [Link target (target-id 228057-) not found]
P0056	Engine Controls and Fuel - 5.3L or 6.2L - [Link target (target-id 228057-) not found]
P0057	Engine Controls and Fuel - 5.3L or 6.2L - [Link target (target-id 228057-) not found]
P0058	Engine Controls and Fuel - 5.3L or 6.2L - [Link target (target-id 228057-) not found]
P0059	Engine Controls and Fuel - 5.3L or 6.2L - [Link target (target-id 228057-) not found]
P005A	Engine Controls and Fuel - 5.3L or 6.2L - [Link target (target-id 228057-) not found]
P005B	Engine Controls and Fuel - 5.3L or 6.2L - [Link target (target-id 228057-) not found]
P005C	Engine Controls and Fuel - 5.3L or 6.2L - [Link target (target-id 228057-) not found]
P005D	Engine Controls and Fuel - 5.3L or 6.2L - [Link target (target-id 228057-) not found]
P005E	Engine Controls and Fuel - 5.3L or 6.2L - [Link target (target-id 228057-) not found]
P005F	Engine Controls and Fuel - 5.3L or 6.2L - [Link target (target-id 228057-) not found]
P0060	Engine Controls and Fuel - 5.3L or 6.2L - [Link target (target-id 228057-) not found]
P0068	Engine Controls and Fuel - 5.3L or 6.2L - [Link target (target-id 333303-) not found]
P006E	Engine Controls and Fuel - 3.0L Diesel - [Link target (target-id 347030-) not found]
P0071	Displays and Gauges - [Link target (target-id 268233-) not found]
P0072	Displays and Gauges - [Link target (target-id 268233-) not found]
P0073	Displays and Gauges - [Link target (target-id 268233-) not found]
P0074	Displays and Gauges - [Link target (target-id 268233-) not found]
P007B	Engine Controls and Fuel - 3.0L Diesel - [Link target (target-id 313003-) not found]
P007C	Engine Controls and Fuel - 3.0L Diesel - [Link target (target-id 313004-) not found]
P007D	Engine Controls and Fuel - 3.0L Diesel - [Link target (target-id 313004-) not found]
P007E	Engine Controls and Fuel - 3.0L Diesel - [Link target (target-id 313004-) not found]
P0087	Engine Controls and Fuel - 3.0L Diesel - [Link target (target-id 346946-) not found]
P0089	Engine Controls and Fuel - 3.0L Diesel - [Link target (target-id 346946-) not found]
P0089	Engine Controls and Fuel - 5.3L or 6.2L - [Link target (target-id 297085-) not found]
P0090	Engine Controls and Fuel - 3.0L Diesel - [Link target (target-id 325593-) not found]
P0090	Engine Controls and Fuel - 5.3L or 6.2L - [Link target (target-id 329292-) not found]
P0091	Engine Controls and Fuel - 3.0L Diesel - [Link target (target-id 325593-) not found]
P0091	Engine Controls and Fuel - 5.3L or 6.2L - [Link target (target-id 329292-) not found]
P0092	Engine Controls and Fuel - 3.0L Diesel - [Link target (target-id 325593-) not found]
P0092	Engine Controls and Fuel - 5.3L or 6.2L - [Link target (target-id 329292-) not found]
P0096	Engine Controls and Fuel - 3.0L Diesel - [Link target (target-id 307796-) not found]
P0096	Engine Controls and Fuel - 5.3L or 6.2L - [Link target (target-id 228194-) not found]
P0097	Engine Controls and Fuel - 3.0L Diesel - [Link target (target-id 313005-) not found]
P0097	Engine Controls and Fuel - 5.3L or 6.2L - [Link target (target-id 306991-) not found]

DTC	Diagnostic Procedure
P0098	Engine Controls and Fuel - 3.0L Diesel - [Link target (target-id 313005-) not found]
P0098	Engine Controls and Fuel - 5.3L or 6.2L - [Link target (target-id 306991-) not found]
P0099	Engine Controls and Fuel - 3.0L Diesel - [Link target (target-id 313005-) not found]
P0099	Engine Controls and Fuel - 5.3L or 6.2L - [Link target (target-id 306991-) not found]
P00B2	Engine Heating and Cooling - [Link target (target-id 341328-) not found]
P00B3	Engine Heating and Cooling - [Link target (target-id 304123-) not found]
P00B4	Engine Heating and Cooling - [Link target (target-id 304123-) not found]
P00B5	Engine Heating and Cooling - [Link target (target-id 304123-) not found]
P00C6	Engine Controls and Fuel - 5.3L or 6.2L - [Link target (target-id 297085-) not found]
P00C7	Engine Controls and Fuel - 3.0L Diesel - [Link target (target-id 327454-) not found]
P00C7	Engine Controls and Fuel - 5.3L or 6.2L - [Link target (target-id 266248-) not found]
P00C9	Engine Controls and Fuel - 3.0L Diesel - [Link target (target-id 325593-) not found]
P00C9	Engine Controls and Fuel - 5.3L or 6.2L - [Link target (target-id 329292-) not found]
P00CA	Engine Controls and Fuel - 3.0L Diesel - [Link target (target-id 325593-) not found]
P00CA	Engine Controls and Fuel - 5.3L or 6.2L - [Link target (target-id 329292-) not found]
P00DF	Engine Controls and Fuel - 3.0L Diesel - [Link target (target-id 313006-) not found]
P00E0	Engine Controls and Fuel - 3.0L Diesel - [Link target (target-id 313008-) not found]
P00E1	Engine Controls and Fuel - 3.0L Diesel - [Link target (target-id 313008-) not found]
P00E2	Engine Controls and Fuel - 3.0L Diesel - [Link target (target-id 313008-) not found]
P00E9	Engine Controls and Fuel - 3.0L Diesel - [Link target (target-id 307796-) not found]
P00EA	Engine Controls and Fuel - 3.0L Diesel - [Link target (target-id 307743-) not found]
P00EB	Engine Controls and Fuel - 3.0L Diesel - [Link target (target-id 307743-) not found]
P00EC	Engine Controls and Fuel - 3.0L Diesel - [Link target (target-id 307743-) not found]
P00F4	Engine Controls and Fuel - 3.0L Diesel - [Link target (target-id 313005-) not found]
P00F4	Engine Controls and Fuel - 5.3L or 6.2L - [Link target (target-id 306991-) not found]
P00F5	Engine Controls and Fuel - 3.0L Diesel - [Link target (target-id 313005-) not found]
P00F5	Engine Controls and Fuel - 5.3L or 6.2L - [Link target (target-id 306991-) not found]
P00F6	Engine Controls and Fuel - 3.0L Diesel - [Link target (target-id 313005-) not found]
P00F6	Engine Controls and Fuel - 5.3L or 6.2L - [Link target (target-id 306991-) not found]
P00FF	Engine Controls and Fuel - 3.0L Diesel - [Link target (target-id 327564-) not found]
P00FF	Engine Controls and Fuel - 5.3L or 6.2L - [Link target (target-id 276019-) not found]
P0101	Engine Controls and Fuel - 3.0L Diesel - [Link target (target-id 307582-) not found]
P0101	Engine Controls and Fuel - 5.3L or 6.2L - [Link target (target-id 333303-) not found]
P0102	Engine Controls and Fuel - 3.0L Diesel - [Link target (target-id 362333-) not found]
P0102	Engine Controls and Fuel - 5.3L or 6.2L - [Link target (target-id 323319-) not found]
P0103	Engine Controls and Fuel - 3.0L Diesel - [Link target (target-id 362333-) not found]
P0103	Engine Controls and Fuel - 5.3L or 6.2L - [Link target (target-id 323319-) not found]
P0106	Engine Controls and Fuel - 3.0L Diesel - [Link target (target-id 307076-) not found]
P0106	Engine Controls and Fuel - 5.3L or 6.2L - [Link target (target-id 333303-) not found]
P0107	Engine Controls and Fuel - 3.0L Diesel - [Link target (target-id 307076-) not found]
P0107	Engine Controls and Fuel - 5.3L or 6.2L - [Link target (target-id 228008-) not found]
P0108	Engine Controls and Fuel - 3.0L Diesel - [Link target (target-id 307076-) not found]

DTC	Diagnostic Procedure
P0108	Engine Controls and Fuel - 5.3L or 6.2L - [Link target (target-id 228008-) not found]
P0111	Engine Controls and Fuel - 3.0L Diesel - [Link target (target-id 307796-) not found]
P0111	Engine Controls and Fuel - 5.3L or 6.2L - [Link target (target-id 228194-) not found]
P0112	Engine Controls and Fuel - 3.0L Diesel - [Link target (target-id 313005-) not found]
P0112	Engine Controls and Fuel - 5.3L or 6.2L - [Link target (target-id 306991-) not found]
P0113	Engine Controls and Fuel - 3.0L Diesel - [Link target (target-id 313005-) not found]
P0113	Engine Controls and Fuel - 5.3L or 6.2L - [Link target (target-id 306991-) not found]
P0114	Engine Controls and Fuel - 3.0L Diesel - [Link target (target-id 313005-) not found]
P0114	Engine Controls and Fuel - 5.3L or 6.2L - [Link target (target-id 306991-) not found]
P0116	Engine Controls and Fuel - 3.0L Diesel - [Link target (target-id 346975-) not found]
P0116	Engine Controls and Fuel - 5.3L or 6.2L - [Link target (target-id 227984-) not found]
P0117	Engine Controls and Fuel - 3.0L Diesel - [Link target (target-id 327012-) not found]
P0117	Engine Controls and Fuel - 5.3L or 6.2L - [Link target (target-id 228200-) not found]
P0118	Engine Controls and Fuel - 3.0L Diesel - [Link target (target-id 327012-) not found]
P0118	Engine Controls and Fuel - 5.3L or 6.2L - [Link target (target-id 228200-) not found]
P0119	Engine Controls and Fuel - 3.0L Diesel - [Link target (target-id 327012-) not found]
P0119	Engine Controls and Fuel - 5.3L or 6.2L - [Link target (target-id 228200-) not found]
P0121	Engine Controls and Fuel - 5.3L or 6.2L - [Link target (target-id 333303-) not found]
P0122	Engine Controls and Fuel - 5.3L or 6.2L - [Link target (target-id 332809-) not found]
P0123	Engine Controls and Fuel - 5.3L or 6.2L - [Link target (target-id 332809-) not found]
P0128	Engine Controls and Fuel - 3.0L Diesel - [Link target (target-id 314808-) not found]
P0128	Engine Controls and Fuel - 5.3L or 6.2L - [Link target (target-id 301562-) not found]
P0131	Engine Controls and Fuel - 5.3L or 6.2L - [Link target (target-id 227954-) not found]
P0131	Engine Controls and Fuel - 5.3L or 6.2L - [Link target (target-id 342979-) not found]
P0132	Engine Controls and Fuel - 5.3L or 6.2L - [Link target (target-id 227954-) not found]
P0132	Engine Controls and Fuel - 5.3L or 6.2L - [Link target (target-id 342979-) not found]
P0135	Engine Controls and Fuel - 5.3L or 6.2L - [Link target (target-id 228057-) not found]
P0137	Engine Controls and Fuel - 5.3L or 6.2L - [Link target (target-id 227954-) not found]
P0137	Engine Controls and Fuel - 5.3L or 6.2L - [Link target (target-id 320403-) not found]
P0138	Engine Controls and Fuel - 5.3L or 6.2L - [Link target (target-id 227954-) not found]
P0138	Engine Controls and Fuel - 5.3L or 6.2L - [Link target (target-id 320403-) not found]
P013A	Engine Controls and Fuel - 5.3L or 6.2L - [Link target (target-id 320403-) not found]
P013A	Engine Controls and Fuel - 5.3L or 6.2L - [Link target (target-id 299054-) not found]
P013B	Engine Controls and Fuel - 5.3L or 6.2L - [Link target (target-id 320403-) not found]
P013B	Engine Controls and Fuel - 5.3L or 6.2L - [Link target (target-id 299054-) not found]
P013C	Engine Controls and Fuel - 5.3L or 6.2L - [Link target (target-id 320403-) not found]
P013C	Engine Controls and Fuel - 5.3L or 6.2L - [Link target (target-id 299054-) not found]
P013D	Engine Controls and Fuel - 5.3L or 6.2L - [Link target (target-id 320403-) not found]
P013D	Engine Controls and Fuel - 5.3L or 6.2L - [Link target (target-id 299054-) not found]
P013E	Engine Controls and Fuel - 5.3L or 6.2L - [Link target (target-id 320403-) not found]
P013E	Engine Controls and Fuel - 5.3L or 6.2L - [Link target (target-id 299054-) not found]
P013F	Engine Controls and Fuel - 5.3L or 6.2L - [Link target (target-id 320403-) not found]

DTC	Diagnostic Procedure
P013F	Engine Controls and Fuel - 5.3L or 6.2L - [Link target (target-id 299054-) not found]
P0141	Engine Controls and Fuel - 5.3L or 6.2L - [Link target (target-id 228057-) not found]
P014A	Engine Controls and Fuel - 5.3L or 6.2L - [Link target (target-id 320403-) not found]
P014A	Engine Controls and Fuel - 5.3L or 6.2L - [Link target (target-id 299054-) not found]
P014B	Engine Controls and Fuel - 5.3L or 6.2L - [Link target (target-id 320403-) not found]
P014B	Engine Controls and Fuel - 5.3L or 6.2L - [Link target (target-id 299054-) not found]
P0151	Engine Controls and Fuel - 5.3L or 6.2L - [Link target (target-id 227954-) not found]
P0151	Engine Controls and Fuel - 5.3L or 6.2L - [Link target (target-id 342979-) not found]
P0152	Engine Controls and Fuel - 5.3L or 6.2L - [Link target (target-id 227954-) not found]
P0152	Engine Controls and Fuel - 5.3L or 6.2L - [Link target (target-id 342979-) not found]
P0155	Engine Controls and Fuel - 5.3L or 6.2L - [Link target (target-id 228057-) not found]
P0157	Engine Controls and Fuel - 5.3L or 6.2L - [Link target (target-id 227954-) not found]
P0157	Engine Controls and Fuel - 5.3L or 6.2L - [Link target (target-id 320403-) not found]
P0158	Engine Controls and Fuel - 5.3L or 6.2L - [Link target (target-id 227954-) not found]
P0158	Engine Controls and Fuel - 5.3L or 6.2L - [Link target (target-id 320403-) not found]
P015A	Engine Controls and Fuel - 5.3L or 6.2L - [Link target (target-id 342979-) not found]
P015A	Engine Controls and Fuel - 5.3L or 6.2L - [Link target (target-id 299054-) not found]
P015B	Engine Controls and Fuel - 5.3L or 6.2L - [Link target (target-id 342979-) not found]
P015B	Engine Controls and Fuel - 5.3L or 6.2L - [Link target (target-id 299054-) not found]
P015C	Engine Controls and Fuel - 5.3L or 6.2L - [Link target (target-id 342979-) not found]
P015C	Engine Controls and Fuel - 5.3L or 6.2L - [Link target (target-id 299054-) not found]
P015D	Engine Controls and Fuel - 5.3L or 6.2L - [Link target (target-id 342979-) not found]
P015D	Engine Controls and Fuel - 5.3L or 6.2L - [Link target (target-id 299054-) not found]
P0161	Engine Controls and Fuel - 5.3L or 6.2L - [Link target (target-id 228057-) not found]
P0171	Engine Controls and Fuel - 3.0L Diesel - [Link target (target-id 307664-) not found]
P0171	Engine Controls and Fuel - 5.3L or 6.2L - [Link target (target-id 227792-) not found]
P0172	Engine Controls and Fuel - 3.0L Diesel - [Link target (target-id 307664-) not found]
P0172	Engine Controls and Fuel - 5.3L or 6.2L - [Link target (target-id 227792-) not found]
P0174	Engine Controls and Fuel - 5.3L or 6.2L - [Link target (target-id 227792-) not found]
P0175	Engine Controls and Fuel - 5.3L or 6.2L - [Link target (target-id 227792-) not found]
P017B	Engine Controls and Fuel - 3.0L Diesel - [Link target (target-id 347037-) not found]
P017C	Engine Controls and Fuel - 3.0L Diesel - [Link target (target-id 347037-) not found]
P017D	Engine Controls and Fuel - 3.0L Diesel - [Link target (target-id 347037-) not found]
P017E	Engine Controls and Fuel - 3.0L Diesel - [Link target (target-id 347037-) not found]
P0181	Engine Controls and Fuel - 3.0L Diesel - [Link target (target-id 307335-) not found]
P0182	Engine Controls and Fuel - 3.0L Diesel - [Link target (target-id 307335-) not found]
P0182	Engine Controls and Fuel - 5.3L or 6.2L - [Link target (target-id 324301-) not found]
P0183	Engine Controls and Fuel - 3.0L Diesel - [Link target (target-id 307335-) not found]
P0183	Engine Controls and Fuel - 5.3L or 6.2L - [Link target (target-id 324301-) not found]
P0184	Engine Controls and Fuel - 3.0L Diesel - [Link target (target-id 307335-) not found]
P0186	Engine Controls and Fuel - 3.0L Diesel - [Link target (target-id 327458-) not found]
P0187	Engine Controls and Fuel - 5.3L or 6.2L - [Link target (target-id 324301-) not found]

DTC	Diagnostic Procedure
P0188	Engine Controls and Fuel - 5.3L or 6.2L - [Link target (target-id 324301-) not found]
P018B	Engine Controls and Fuel - 3.0L Diesel - [Link target (target-id 307185-) not found]
P018B	Engine Controls and Fuel - 5.3L or 6.2L - [Link target (target-id 227846-) not found]
P018C	Engine Controls and Fuel - 3.0L Diesel - [Link target (target-id 307185-) not found]
P018C	Engine Controls and Fuel - 5.3L or 6.2L - [Link target (target-id 227846-) not found]
P018D	Engine Controls and Fuel - 3.0L Diesel - [Link target (target-id 307185-) not found]
P018D	Engine Controls and Fuel - 5.3L or 6.2L - [Link target (target-id 227846-) not found]
P0191	Engine Controls and Fuel - 3.0L Diesel - [Link target (target-id 327458-) not found]
P0191	Engine Controls and Fuel - 5.3L or 6.2L - [Link target (target-id 324301-) not found]
P0192	Engine Controls and Fuel - 3.0L Diesel - [Link target (target-id 327458-) not found]
P0192	Engine Controls and Fuel - 5.3L or 6.2L - [Link target (target-id 324301-) not found]
P0193	Engine Controls and Fuel - 3.0L Diesel - [Link target (target-id 327458-) not found]
P0196	Displays and Gauges - [Link target (target-id 309839-) not found]
P0197	Displays and Gauges - [Link target (target-id 309839-) not found]
P0198	Displays and Gauges - [Link target (target-id 309839-) not found]
P0198	Engine Heating and Cooling - [Link target (target-id 351643-) not found]
P0199	Displays and Gauges - [Link target (target-id 309839-) not found]
P01BB	Displays and Gauges - [Link target (target-id 301798-) not found]
P01BC	Displays and Gauges - [Link target (target-id 301798-) not found]
P01BD	Displays and Gauges - [Link target (target-id 301798-) not found]
P01CB	Engine Controls and Fuel - 3.0L Diesel - [Link target (target-id 309300-) not found]
P01CC	Engine Controls and Fuel - 3.0L Diesel - [Link target (target-id 309300-) not found]
P01CD	Engine Controls and Fuel - 3.0L Diesel - [Link target (target-id 309300-) not found]
P01CE	Engine Controls and Fuel - 3.0L Diesel - [Link target (target-id 309300-) not found]
P01CF	Engine Controls and Fuel - 3.0L Diesel - [Link target (target-id 309300-) not found]
P01D0	Engine Controls and Fuel - 3.0L Diesel - [Link target (target-id 309300-) not found]
P01D1	Engine Controls and Fuel - 3.0L Diesel - [Link target (target-id 309300-) not found]
P01D2	Engine Controls and Fuel - 3.0L Diesel - [Link target (target-id 309300-) not found]
P01D3	Engine Controls and Fuel - 3.0L Diesel - [Link target (target-id 309300-) not found]
P01D4	Engine Controls and Fuel - 3.0L Diesel - [Link target (target-id 309300-) not found]
P01D5	Engine Controls and Fuel - 3.0L Diesel - [Link target (target-id 309300-) not found]
P01D6	Engine Controls and Fuel - 3.0L Diesel - [Link target (target-id 309300-) not found]
P01F0	Engine Controls and Fuel - 3.0L Diesel - [Link target (target-id 314808-) not found]
P01F0	Engine Controls and Fuel - 5.3L or 6.2L - [Link target (target-id 301562-) not found]
P0201	Engine Controls and Fuel - 3.0L Diesel - [Link target (target-id 309301-) not found]
P0201	Engine Controls and Fuel - 5.3L or 6.2L - [Link target (target-id 324174-) not found]
P0202	Engine Controls and Fuel - 3.0L Diesel - [Link target (target-id 309301-) not found]
P0202	Engine Controls and Fuel - 5.3L or 6.2L - [Link target (target-id 324174-) not found]
P0203	Engine Controls and Fuel - 3.0L Diesel - [Link target (target-id 309301-) not found]
P0203	Engine Controls and Fuel - 5.3L or 6.2L - [Link target (target-id 324174-) not found]
P0204	Engine Controls and Fuel - 3.0L Diesel - [Link target (target-id 309301-) not found]
P0204	Engine Controls and Fuel - 5.3L or 6.2L - [Link target (target-id 324174-) not found]

DTC	Diagnostic Procedure
P0205	Engine Controls and Fuel - 3.0L Diesel - [Link target (target-id 309301-) not found]
P0205	Engine Controls and Fuel - 5.3L or 6.2L - [Link target (target-id 324174-) not found]
P0206	Engine Controls and Fuel - 3.0L Diesel - [Link target (target-id 309301-) not found]
P0206	Engine Controls and Fuel - 5.3L or 6.2L - [Link target (target-id 324174-) not found]
P0207	Engine Controls and Fuel - 5.3L or 6.2L - [Link target (target-id 324174-) not found]
P0208	Engine Controls and Fuel - 5.3L or 6.2L - [Link target (target-id 324174-) not found]
P020A	Engine Controls and Fuel - 3.0L Diesel - [Link target (target-id 309302-) not found]
P020B	Engine Controls and Fuel - 3.0L Diesel - [Link target (target-id 309302-) not found]
P020C	Engine Controls and Fuel - 3.0L Diesel - [Link target (target-id 309302-) not found]
P020D	Engine Controls and Fuel - 3.0L Diesel - [Link target (target-id 309302-) not found]
P020E	Engine Controls and Fuel - 3.0L Diesel - [Link target (target-id 309302-) not found]
P020F	Engine Controls and Fuel - 3.0L Diesel - [Link target (target-id 309302-) not found]
P0216	Engine Controls and Fuel - 3.0L Diesel - [Link target (target-id 307637-) not found]
P0222	Engine Controls and Fuel - 5.3L or 6.2L - [Link target (target-id 332809-) not found]
P0223	Engine Controls and Fuel - 5.3L or 6.2L - [Link target (target-id 332809-) not found]
P0234	Engine Controls and Fuel - 3.0L Diesel - [Link target (target-id 307319-) not found]
P0261	Engine Controls and Fuel - 3.0L Diesel - [Link target (target-id 309301-) not found]
P0261	Engine Controls and Fuel - 5.3L or 6.2L - [Link target (target-id 324174-) not found]
P0262	Engine Controls and Fuel - 3.0L Diesel - [Link target (target-id 309301-) not found]
P0262	Engine Controls and Fuel - 5.3L or 6.2L - [Link target (target-id 324174-) not found]
P0264	Engine Controls and Fuel - 3.0L Diesel - [Link target (target-id 309301-) not found]
P0264	Engine Controls and Fuel - 5.3L or 6.2L - [Link target (target-id 324174-) not found]
P0265	Engine Controls and Fuel - 3.0L Diesel - [Link target (target-id 309301-) not found]
P0265	Engine Controls and Fuel - 5.3L or 6.2L - [Link target (target-id 324174-) not found]
P0267	Engine Controls and Fuel - 3.0L Diesel - [Link target (target-id 309301-) not found]
P0267	Engine Controls and Fuel - 5.3L or 6.2L - [Link target (target-id 324174-) not found]
P0268	Engine Controls and Fuel - 3.0L Diesel - [Link target (target-id 309301-) not found]
P0268	Engine Controls and Fuel - 5.3L or 6.2L - [Link target (target-id 324174-) not found]
P026A	Engine Controls and Fuel - 3.0L Diesel - [Link target (target-id 307409-) not found]
P026B	Engine Controls and Fuel - 3.0L Diesel - [Link target (target-id 323900-) not found]
P026B	Engine Controls and Fuel - 5.3L or 6.2L - [Link target (target-id 324290-) not found]
P026C	Engine Controls and Fuel - 3.0L Diesel - [Link target (target-id 307493-) not found]
P026D	Engine Controls and Fuel - 3.0L Diesel - [Link target (target-id 307493-) not found]
P026E	Engine Controls and Fuel - 3.0L Diesel - [Link target (target-id 328386-) not found]
P0270	Engine Controls and Fuel - 3.0L Diesel - [Link target (target-id 309301-) not found]
P0270	Engine Controls and Fuel - 5.3L or 6.2L - [Link target (target-id 324174-) not found]
P0271	Engine Controls and Fuel - 3.0L Diesel - [Link target (target-id 309301-) not found]
P0271	Engine Controls and Fuel - 5.3L or 6.2L - [Link target (target-id 324174-) not found]
P0273	Engine Controls and Fuel - 3.0L Diesel - [Link target (target-id 309301-) not found]
P0273	Engine Controls and Fuel - 5.3L or 6.2L - [Link target (target-id 324174-) not found]
P0274	Engine Controls and Fuel - 3.0L Diesel - [Link target (target-id 309301-) not found]
P0274	Engine Controls and Fuel - 5.3L or 6.2L - [Link target (target-id 324174-) not found]

DTC	Diagnostic Procedure
P0276	Engine Controls and Fuel - 3.0L Diesel - [Link target (target-id 309301-) not found]
P0276	Engine Controls and Fuel - 5.3L or 6.2L - [Link target (target-id 324174-) not found]
P0277	Engine Controls and Fuel - 3.0L Diesel - [Link target (target-id 309301-) not found]
P0277	Engine Controls and Fuel - 5.3L or 6.2L - [Link target (target-id 324174-) not found]
P0279	Engine Controls and Fuel - 5.3L or 6.2L - [Link target (target-id 324174-) not found]
P0280	Engine Controls and Fuel - 5.3L or 6.2L - [Link target (target-id 324174-) not found]
P0282	Engine Controls and Fuel - 5.3L or 6.2L - [Link target (target-id 324174-) not found]
P0283	Engine Controls and Fuel - 5.3L or 6.2L - [Link target (target-id 324174-) not found]
P0299	Engine Controls and Fuel - 3.0L Diesel - [Link target (target-id 307319-) not found]
P02CC	Engine Controls and Fuel - 3.0L Diesel - [Link target (target-id 309304-) not found]
P02CD	Engine Controls and Fuel - 3.0L Diesel - [Link target (target-id 309304-) not found]
P02CE	Engine Controls and Fuel - 3.0L Diesel - [Link target (target-id 309304-) not found]
P02CF	Engine Controls and Fuel - 3.0L Diesel - [Link target (target-id 309304-) not found]
P02D0	Engine Controls and Fuel - 3.0L Diesel - [Link target (target-id 309304-) not found]
P02D1	Engine Controls and Fuel - 3.0L Diesel - [Link target (target-id 309304-) not found]
P02D2	Engine Controls and Fuel - 3.0L Diesel - [Link target (target-id 309304-) not found]
P02D3	Engine Controls and Fuel - 3.0L Diesel - [Link target (target-id 309304-) not found]
P02D4	Engine Controls and Fuel - 3.0L Diesel - [Link target (target-id 309304-) not found]
P02D5	Engine Controls and Fuel - 3.0L Diesel - [Link target (target-id 309304-) not found]
P02D6	Engine Controls and Fuel - 3.0L Diesel - [Link target (target-id 309304-) not found]
P02D7	Engine Controls and Fuel - 3.0L Diesel - [Link target (target-id 309304-) not found]
P02E0	Engine Controls and Fuel - 3.0L Diesel - [Link target (target-id 347499-) not found]
P02E1	Engine Controls and Fuel - 3.0L Diesel - [Link target (target-id 307798-) not found]
P02E2	Engine Controls and Fuel - 3.0L Diesel - [Link target (target-id 347499-) not found]
P02E3	Engine Controls and Fuel - 3.0L Diesel - [Link target (target-id 347499-) not found]
P02E5	Engine Controls and Fuel - 3.0L Diesel - [Link target (target-id 307798-) not found]
P02E8	Engine Controls and Fuel - 3.0L Diesel - [Link target (target-id 313014-) not found]
P02E9	Engine Controls and Fuel - 3.0L Diesel - [Link target (target-id 313014-) not found]
P02EB	Engine Controls and Fuel - 3.0L Diesel - [Link target (target-id 347499-) not found]
P02EE	Engine Controls and Fuel - 3.0L Diesel - [Link target (target-id 309305-) not found]
P02EE	Engine Controls and Fuel - 5.3L or 6.2L - [Link target (target-id 333138-) not found]
P02EF	Engine Controls and Fuel - 3.0L Diesel - [Link target (target-id 309305-) not found]
P02EF	Engine Controls and Fuel - 5.3L or 6.2L - [Link target (target-id 333138-) not found]
P02F0	Engine Controls and Fuel - 3.0L Diesel - [Link target (target-id 309305-) not found]
P02F0	Engine Controls and Fuel - 5.3L or 6.2L - [Link target (target-id 333138-) not found]
P02F1	Engine Controls and Fuel - 3.0L Diesel - [Link target (target-id 309305-) not found]
P02F1	Engine Controls and Fuel - 5.3L or 6.2L - [Link target (target-id 333138-) not found]
P02F2	Engine Controls and Fuel - 3.0L Diesel - [Link target (target-id 309305-) not found]
P02F2	Engine Controls and Fuel - 5.3L or 6.2L - [Link target (target-id 333138-) not found]
P02F3	Engine Controls and Fuel - 3.0L Diesel - [Link target (target-id 309305-) not found]
P02F3	Engine Controls and Fuel - 5.3L or 6.2L - [Link target (target-id 333138-) not found]
P02F4	Engine Controls and Fuel - 5.3L or 6.2L - [Link target (target-id 333138-) not found]

DTC	Diagnostic Procedure
P02F5	Engine Controls and Fuel - 5.3L or 6.2L - [Link target (target-id 333138-) not found]
P0300	Engine Controls and Fuel - 3.0L Diesel - [Link target (target-id 311938-) not found]
P0300	Engine Controls and Fuel - 5.3L or 6.2L - [Link target (target-id 227972-) not found]
P0301	Engine Controls and Fuel - 3.0L Diesel - [Link target (target-id 311938-) not found]
P0301	Engine Controls and Fuel - 5.3L or 6.2L - [Link target (target-id 227972-) not found]
P0302	Engine Controls and Fuel - 3.0L Diesel - [Link target (target-id 311938-) not found]
P0302	Engine Controls and Fuel - 5.3L or 6.2L - [Link target (target-id 227972-) not found]
P0303	Engine Controls and Fuel - 3.0L Diesel - [Link target (target-id 311938-) not found]
P0303	Engine Controls and Fuel - 5.3L or 6.2L - [Link target (target-id 227972-) not found]
P0304	Engine Controls and Fuel - 3.0L Diesel - [Link target (target-id 311938-) not found]
P0304	Engine Controls and Fuel - 5.3L or 6.2L - [Link target (target-id 227972-) not found]
P0305	Engine Controls and Fuel - 3.0L Diesel - [Link target (target-id 311938-) not found]
P0305	Engine Controls and Fuel - 5.3L or 6.2L - [Link target (target-id 227972-) not found]
P0306	Engine Controls and Fuel - 3.0L Diesel - [Link target (target-id 311938-) not found]
P0306	Engine Controls and Fuel - 5.3L or 6.2L - [Link target (target-id 227972-) not found]
P0307	Engine Controls and Fuel - 5.3L or 6.2L - [Link target (target-id 227972-) not found]
P0308	Engine Controls and Fuel - 5.3L or 6.2L - [Link target (target-id 227972-) not found]
P0315	Engine Controls and Fuel - 3.0L Diesel - [Link target (target-id 307499-) not found]
P0315	Engine Controls and Fuel - 5.3L or 6.2L - [Link target (target-id 227702-) not found]
P0324	Engine Controls and Fuel - 5.3L or 6.2L - [Link target (target-id 227713-) not found]
P0325	Engine Controls and Fuel - 5.3L or 6.2L - [Link target (target-id 227713-) not found]
P0326	Engine Controls and Fuel - 5.3L or 6.2L - [Link target (target-id 227713-) not found]
P0327	Engine Controls and Fuel - 5.3L or 6.2L - [Link target (target-id 227713-) not found]
P0328	Engine Controls and Fuel - 5.3L or 6.2L - [Link target (target-id 227713-) not found]
P0330	Engine Controls and Fuel - 5.3L or 6.2L - [Link target (target-id 227713-) not found]
P0331	Engine Controls and Fuel - 5.3L or 6.2L - [Link target (target-id 227713-) not found]
P0332	Engine Controls and Fuel - 5.3L or 6.2L - [Link target (target-id 227713-) not found]
P0333	Engine Controls and Fuel - 5.3L or 6.2L - [Link target (target-id 227713-) not found]
P0335	Engine Controls and Fuel - 3.0L Diesel - [Link target (target-id 307702-) not found]
P0335	Engine Controls and Fuel - 5.3L or 6.2L - [Link target (target-id 227797-) not found]
P0336	Engine Controls and Fuel - 3.0L Diesel - [Link target (target-id 307702-) not found]
P0336	Engine Controls and Fuel - 5.3L or 6.2L - [Link target (target-id 227797-) not found]
P0340	Engine Controls and Fuel - 3.0L Diesel - [Link target (target-id 307116-) not found]
P0340	Engine Controls and Fuel - 5.3L or 6.2L - [Link target (target-id 227862-) not found]
P0341	Engine Controls and Fuel - 3.0L Diesel - [Link target (target-id 307116-) not found]
P0341	Engine Controls and Fuel - 5.3L or 6.2L - [Link target (target-id 227862-) not found]
P034A	Engine Controls and Fuel - 3.0L Diesel - [Link target (target-id 311939-) not found]
P034A	Engine Controls and Fuel - 5.3L or 6.2L - [Link target (target-id 276020-) not found]
P034B	Engine Controls and Fuel - 3.0L Diesel - [Link target (target-id 311939-) not found]
P034B	Engine Controls and Fuel - 5.3L or 6.2L - [Link target (target-id 276020-) not found]
P034F	Engine Controls and Fuel - 3.0L Diesel - [Link target (target-id 338023-) not found]
P0351	Engine Controls and Fuel - 5.3L or 6.2L - [Link target (target-id 254362-) not found]

DTC	Diagnostic Procedure
P0352	Engine Controls and Fuel - 5.3L or 6.2L - [Link target (target-id 254362-) not found]
P0353	Engine Controls and Fuel - 5.3L or 6.2L - [Link target (target-id 254362-) not found]
P0354	Engine Controls and Fuel - 5.3L or 6.2L - [Link target (target-id 254362-) not found]
P0355	Engine Controls and Fuel - 5.3L or 6.2L - [Link target (target-id 254362-) not found]
P0356	Engine Controls and Fuel - 5.3L or 6.2L - [Link target (target-id 254362-) not found]
P0357	Engine Controls and Fuel - 5.3L or 6.2L - [Link target (target-id 254362-) not found]
P0358	Engine Controls and Fuel - 5.3L or 6.2L - [Link target (target-id 254362-) not found]
P037A	Engine Controls and Fuel - 3.0L Diesel - [Link target (target-id 307808-) not found]
P037B	Engine Controls and Fuel - 3.0L Diesel - [Link target (target-id 307808-) not found]
P037E	Engine Controls and Fuel - 3.0L Diesel - [Link target (target-id 326224-) not found]
P037F	Engine Controls and Fuel - 3.0L Diesel - [Link target (target-id 326224-) not found]
P0381	Engine Controls and Fuel - 3.0L Diesel - [Link target (target-id 307808-) not found]
P0401	Engine Controls and Fuel - 3.0L Diesel - [Link target (target-id 347082-) not found]
P0402	Engine Controls and Fuel - 3.0L Diesel - [Link target (target-id 347082-) not found]
P0403	Engine Controls and Fuel - 3.0L Diesel - [Link target (target-id 350315-) not found]
P0404	Engine Controls and Fuel - 3.0L Diesel - [Link target (target-id 338023-) not found]
P0405	Engine Controls and Fuel - 3.0L Diesel - [Link target (target-id 347034-) not found]
P0406	Engine Controls and Fuel - 3.0L Diesel - [Link target (target-id 347034-) not found]
P041B	Engine Controls and Fuel - 3.0L Diesel - [Link target (target-id 347570-) not found]
P041C	Engine Controls and Fuel - 3.0L Diesel - [Link target (target-id 347570-) not found]
P041D	Engine Controls and Fuel - 3.0L Diesel - [Link target (target-id 347570-) not found]
P041E	Engine Controls and Fuel - 3.0L Diesel - [Link target (target-id 347570-) not found]
P0420	Engine Controls and Fuel - 5.3L or 6.2L - [Link target (target-id 227870-) not found]
P0421	Engine Controls and Fuel - 3.0L Diesel - [Link target (target-id 307619-) not found]
P042E	Engine Controls and Fuel - 3.0L Diesel - [Link target (target-id 338023-) not found]
P0430	Engine Controls and Fuel - 5.3L or 6.2L - [Link target (target-id 227870-) not found]
P0442	Engine Controls and Fuel - 5.3L or 6.2L - [Link target (target-id 302583-) not found]
P0443	Engine Controls and Fuel - 5.3L or 6.2L - [Link target (target-id 253845-) not found]
P0446	Engine Controls and Fuel - 5.3L or 6.2L - [Link target (target-id 227750-) not found]
P0449	Engine Controls and Fuel - 5.3L or 6.2L - [Link target (target-id 253846-) not found]
P044C	Engine Controls and Fuel - 3.0L Diesel - [Link target (target-id 347034-) not found]
P044D	Engine Controls and Fuel - 3.0L Diesel - [Link target (target-id 347034-) not found]
P0451	Engine Controls and Fuel - 5.3L or 6.2L - [Link target (target-id 227716-) not found]
P0452	Engine Controls and Fuel - 5.3L or 6.2L - [Link target (target-id 227716-) not found]
P0453	Engine Controls and Fuel - 5.3L or 6.2L - [Link target (target-id 227716-) not found]
P0454	Engine Controls and Fuel - 5.3L or 6.2L - [Link target (target-id 227716-) not found]
P0455	Engine Controls and Fuel - 5.3L or 6.2L - [Link target (target-id 302583-) not found]
P0458	Engine Controls and Fuel - 5.3L or 6.2L - [Link target (target-id 253845-) not found]
P0459	Engine Controls and Fuel - 5.3L or 6.2L - [Link target (target-id 253845-) not found]
P045A	Engine Controls and Fuel - 3.0L Diesel - [Link target (target-id 350315-) not found]
P045B	Engine Controls and Fuel - 3.0L Diesel - [Link target (target-id 313393-) not found]
P045C	Engine Controls and Fuel - 3.0L Diesel - [Link target (target-id 350315-) not found]

DTC	Diagnostic Procedure
P045D	Engine Controls and Fuel - 3.0L Diesel - [Link target (target-id 350315-) not found]
P045E	Engine Controls and Fuel - 3.0L Diesel - [Link target (target-id 313393-) not found]
P0461	Displays and Gauges - [Link target (target-id 200973-) not found]
P0462	Displays and Gauges - [Link target (target-id 200973-) not found]
P0463	Displays and Gauges - [Link target (target-id 200973-) not found]
P0464	Displays and Gauges - [Link target (target-id 200973-) not found]
P0475	Engine Controls and Fuel - 3.0L Diesel - [Link target (target-id 347128-) not found]
P0476	Engine Controls and Fuel - 3.0L Diesel - [Link target (target-id 350352-) not found]
P0477	Engine Controls and Fuel - 3.0L Diesel - [Link target (target-id 347128-) not found]
P0478	Engine Controls and Fuel - 3.0L Diesel - [Link target (target-id 347128-) not found]
P0489	Engine Controls and Fuel - 3.0L Diesel - [Link target (target-id 350315-) not found]
P048A	Engine Controls and Fuel - 3.0L Diesel - [Link target (target-id 350352-) not found]
P048D	Engine Controls and Fuel - 3.0L Diesel - [Link target (target-id 313844-) not found]
P048E	Engine Controls and Fuel - 3.0L Diesel - [Link target (target-id 313844-) not found]
P0490	Engine Controls and Fuel - 3.0L Diesel - [Link target (target-id 350315-) not found]
P0494	Engine Heating and Cooling - [Link target (target-id 327034-) not found]
P0494	Engine Heating and Cooling - [Link target (target-id 327035-) not found]
P0496	Engine Controls and Fuel - 5.3L or 6.2L - [Link target (target-id 227884-) not found]
P0498	Engine Controls and Fuel - 5.3L or 6.2L - [Link target (target-id 253846-) not found]
P0499	Engine Controls and Fuel - 5.3L or 6.2L - [Link target (target-id 253846-) not found]
P049B	Engine Controls and Fuel - 3.0L Diesel - [Link target (target-id 347082-) not found]
P049C	Engine Controls and Fuel - 3.0L Diesel - [Link target (target-id 347082-) not found]
P049D	Engine Controls and Fuel - 3.0L Diesel - [Link target (target-id 307760-) not found]
P049E	Engine Controls and Fuel - 3.0L Diesel - [Link target (target-id 313395-) not found]
P04CF	Engine Controls and Fuel - 3.0L Diesel - [Link target (target-id 327020-) not found]
P04D0	Engine Controls and Fuel - 3.0L Diesel - [Link target (target-id 327020-) not found]
P04D1	Engine Controls and Fuel - 3.0L Diesel - [Link target (target-id 327020-) not found]
P04D2	Engine Controls and Fuel - 3.0L Diesel - [Link target (target-id 327020-) not found]
P04DB	Engine Controls and Fuel - 3.0L Diesel - [Link target (target-id 313016-) not found]
P04E2	Engine Controls and Fuel - 3.0L Diesel - [Link target (target-id 313016-) not found]
P04E3	Engine Controls and Fuel - 3.0L Diesel - [Link target (target-id 313016-) not found]
P04FA	Engine Controls and Fuel - 3.0L Diesel - [Link target (target-id 350315-) not found]
P04FB	Engine Controls and Fuel - 3.0L Diesel - [Link target (target-id 313016-) not found]
P0506	Engine Controls and Fuel - 3.0L Diesel - [Link target (target-id 307144-) not found]
P0506	Engine Controls and Fuel - 5.3L or 6.2L - [Link target (target-id 227941-) not found]
P0507	Engine Controls and Fuel - 3.0L Diesel - [Link target (target-id 307144-) not found]
P0507	Engine Controls and Fuel - 5.3L or 6.2L - [Link target (target-id 227941-) not found]
P050D	Engine Controls and Fuel - 5.3L or 6.2L - [Link target (target-id 229167-) not found]
P0513	Immobilizer - [Link target (target-id 156476-) not found]
P0521	Displays and Gauges - [Link target (target-id 161095-) not found]
P0522	Displays and Gauges - [Link target (target-id 161095-) not found]
P0523	Displays and Gauges - [Link target (target-id 161095-) not found]

DTC	Diagnostic Procedure
P0532	HVAC - Automatic - [Link target (target-id 69299-) not found]
P0533	HVAC - Automatic - [Link target (target-id 69299-) not found]
P0537	HVAC - Automatic - [Link target (target-id 359576-) not found]
P0538	HVAC - Automatic - [Link target (target-id 359576-) not found]
P0539	HVAC - Automatic - [Link target (target-id 359576-) not found]
P0545	Engine Controls and Fuel - 3.0L Diesel - [Link target (target-id 347083-) not found]
P0546	Engine Controls and Fuel - 3.0L Diesel - [Link target (target-id 347083-) not found]
P054E	Engine Controls and Fuel - 3.0L Diesel - [Link target (target-id 307473-) not found]
P054F	Engine Controls and Fuel - 3.0L Diesel - [Link target (target-id 307473-) not found]
P0560	Starting, Charging, and Low Voltage Energy Storage - [Link target (target-id 303008-) not found]
P0561	Starting, Charging, and Low Voltage Energy Storage - [Link target (target-id 303008-) not found]
P0562	Starting, Charging, and Low Voltage Energy Storage - [Link target (target-id 303008-) not found]
P0563	Starting, Charging, and Low Voltage Energy Storage - [Link target (target-id 303008-) not found]
P0564	Cruise Control - [Link target (target-id 226319-) not found]
P0565	Cruise Control - [Link target (target-id 226319-) not found]
P0567	Cruise Control - [Link target (target-id 226319-) not found]
P0568	Cruise Control - [Link target (target-id 226319-) not found]
P056C	Cruise Control - [Link target (target-id 226319-) not found]
P057B	Engine Controls and Fuel - 3.0L Diesel - [Link target (target-id 307738-) not found]
P057B	Engine Controls and Fuel - 5.3L or 6.2L - [Link target (target-id 272841-) not found]
P057C	Engine Controls and Fuel - 3.0L Diesel - [Link target (target-id 307738-) not found]
P057C	Engine Controls and Fuel - 5.3L or 6.2L - [Link target (target-id 272841-) not found]
P057D	Engine Controls and Fuel - 3.0L Diesel - [Link target (target-id 307738-) not found]
P057D	Engine Controls and Fuel - 5.3L or 6.2L - [Link target (target-id 272841-) not found]
P057E	Engine Controls and Fuel - 3.0L Diesel - [Link target (target-id 307738-) not found]
P057E	Engine Controls and Fuel - 5.3L or 6.2L - [Link target (target-id 272841-) not found]
P0580	Cruise Control - [Link target (target-id 226319-) not found]
P0581	Cruise Control - [Link target (target-id 226319-) not found]
P0589	Cruise Control - [Link target (target-id 226319-) not found]
P058A	Starting, Charging, and Low Voltage Energy Storage - [Link target (target-id 314847-) not found]
P058B	Starting, Charging, and Low Voltage Energy Storage - [Link target (target-id 314847-) not found]
P058C	Starting, Charging, and Low Voltage Energy Storage - [Link target (target-id 314847-) not found]
P058D	Starting, Charging, and Low Voltage Energy Storage - [Link target (target-id 314847-) not found]
P058E	Starting, Charging, and Low Voltage Energy Storage - [Link target (target-id 314847-) not found]
P058F	Starting, Charging, and Low Voltage Energy Storage - [Link target (target-id 314847-) not found]
P0592	Cruise Control - [Link target (target-id 226319-) not found]
P0593	Cruise Control - [Link target (target-id 226319-) not found]
P059F	Bumpers and Fascias - [Link target (target-id 354234-) not found]
P05AE	Bumpers and Fascias - [Link target (target-id 354235-) not found]
P05D1	Secondary and Configurable Customer Controls - [Link target (target-id 323238-) not found]
P05D2	Secondary and Configurable Customer Controls - [Link target (target-id 323238-) not found]
P05D3	Secondary and Configurable Customer Controls - [Link target (target-id 323238-) not found]

DTC	Diagnostic Procedure
P05EC	Engine Controls and Fuel - 3.0L Diesel - [Link target (target-id 323900-) not found]
P05EC	Engine Controls and Fuel - 5.3L or 6.2L - [Link target (target-id 324290-) not found]
P05FD	Engine Controls and Fuel - 3.0L Diesel - [Link target (target-id 347030-) not found]
P0601	Engine Controls and Fuel - 3.0L Diesel - [Link target (target-id 323900-) not found]
P0601	Engine Controls and Fuel - 5.3L or 6.2L - [Link target (target-id 324290-) not found]
P0601	Data Communications - [Link target (target-id 272300-) not found]
P0601	Driver Assistance Systems - [Link target (target-id 299160-) not found]
P0601	Automatic Transmission - 10L80 - [Link target (target-id 341476-) not found]
P0602	Engine Controls and Fuel - 3.0L Diesel - [Link target (target-id 323900-) not found]
P0602	Engine Controls and Fuel - 5.3L or 6.2L - [Link target (target-id 324290-) not found]
P0602	Data Communications - [Link target (target-id 272300-) not found]
P0602	Driver Assistance Systems - [Link target (target-id 299161-) not found]
P0602	Automatic Transmission - 10L80 - [Link target (target-id 341476-) not found]
P0603	Engine Controls and Fuel - 3.0L Diesel - [Link target (target-id 323900-) not found]
P0603	Engine Controls and Fuel - 5.3L or 6.2L - [Link target (target-id 324290-) not found]
P0603	Data Communications - [Link target (target-id 272300-) not found]
P0603	Driver Assistance Systems - [Link target (target-id 299162-) not found]
P0603	Automatic Transmission - 10L80 - [Link target (target-id 341476-) not found]
P0604	Engine Controls and Fuel - 3.0L Diesel - [Link target (target-id 323900-) not found]
P0604	Engine Controls and Fuel - 5.3L or 6.2L - [Link target (target-id 324290-) not found]
P0604	Data Communications - [Link target (target-id 272300-) not found]
P0604	Driver Assistance Systems - [Link target (target-id 299163-) not found]
P0604	Automatic Transmission - 10L80 - [Link target (target-id 341476-) not found]
P0605	Engine Controls and Fuel - 3.0L Diesel - [Link target (target-id 323900-) not found]
P0605	Engine Controls and Fuel - 5.3L or 6.2L - [Link target (target-id 324290-) not found]
P0605	Data Communications - [Link target (target-id 272300-) not found]
P0606	Engine Controls and Fuel - 3.0L Diesel - [Link target (target-id 323900-) not found]
P0606	Engine Controls and Fuel - 5.3L or 6.2L - [Link target (target-id 324290-) not found]
P0606	Data Communications - [Link target (target-id 272300-) not found]
P0606	Driver Assistance Systems - [Link target (target-id 299164-) not found]
P0606	Automatic Transmission - 10L80 - [Link target (target-id 341476-) not found]
P0607	Engine Controls and Fuel - 3.0L Diesel - [Link target (target-id 323900-) not found]
P0607	Engine Controls and Fuel - 5.3L or 6.2L - [Link target (target-id 324290-) not found]
P0607	Data Communications - [Link target (target-id 272300-) not found]
P0607	Driver Assistance Systems - [Link target (target-id 329001-) not found]
P0607	Automatic Transmission - 10L80 - [Link target (target-id 341476-) not found]
P060A	Engine Controls and Fuel - 3.0L Diesel - [Link target (target-id 323900-) not found]
P060A	Engine Controls and Fuel - 5.3L or 6.2L - [Link target (target-id 324290-) not found]
P060A	Data Communications - [Link target (target-id 272300-) not found]
P060A	Driver Assistance Systems - [Link target (target-id 329002-) not found]
P060B	Engine Controls and Fuel - 3.0L Diesel - [Link target (target-id 323900-) not found]
P060B	Engine Controls and Fuel - 5.3L or 6.2L - [Link target (target-id 324290-) not found]

DTC	Diagnostic Procedure
P060B	Data Communications - [Link target (target-id 272300-) not found]
P060C	Engine Controls and Fuel - 3.0L Diesel - [Link target (target-id 323900-) not found]
P060C	Engine Controls and Fuel - 5.3L or 6.2L - [Link target (target-id 324290-) not found]
P060C	Data Communications - [Link target (target-id 272300-) not found]
P060C	Automatic Transmission - 10L80 - [Link target (target-id 341476-) not found]
P060D	Engine Controls and Fuel - 3.0L Diesel - [Link target (target-id 323900-) not found]
P060D	Engine Controls and Fuel - 5.3L or 6.2L - [Link target (target-id 324290-) not found]
P0610	Engine Controls and Fuel - 3.0L Diesel - [Link target (target-id 323900-) not found]
P0610	Engine Controls and Fuel - 5.3L or 6.2L - [Link target (target-id 324290-) not found]
P0610	Data Communications - [Link target (target-id 272300-) not found]
P0615	Starting, Charging, and Low Voltage Energy Storage - [Link target (target-id 147526-) not found]
P0616	Starting, Charging, and Low Voltage Energy Storage - [Link target (target-id 147526-) not found]
P0617	Starting, Charging, and Low Voltage Energy Storage - [Link target (target-id 147526-) not found]
P061C	Engine Controls and Fuel - 3.0L Diesel - [Link target (target-id 323900-) not found]
P061C	Engine Controls and Fuel - 5.3L or 6.2L - [Link target (target-id 324290-) not found]
P0621	Starting, Charging, and Low Voltage Energy Storage - [Link target (target-id 37806-) not found]
P0622	Starting, Charging, and Low Voltage Energy Storage - [Link target (target-id 37807-) not found]
P0627	Engine Controls and Fuel - 3.0L Diesel - [Link target (target-id 310025-) not found]
P0627	Engine Controls and Fuel - 5.3L or 6.2L - [Link target (target-id 327483-) not found]
P0628	Engine Controls and Fuel - 3.0L Diesel - [Link target (target-id 310025-) not found]
P0628	Engine Controls and Fuel - 5.3L or 6.2L - [Link target (target-id 327483-) not found]
P0629	Engine Controls and Fuel - 3.0L Diesel - [Link target (target-id 310025-) not found]
P0629	Engine Controls and Fuel - 5.3L or 6.2L - [Link target (target-id 327483-) not found]
P062B	Engine Controls and Fuel - 3.0L Diesel - [Link target (target-id 323900-) not found]
P062B	Engine Controls and Fuel - 5.3L or 6.2L - [Link target (target-id 324290-) not found]
P062D	Engine Controls and Fuel - 3.0L Diesel - [Link target (target-id 307794-) not found]
P062F	Engine Controls and Fuel - 3.0L Diesel - [Link target (target-id 323900-) not found]
P062F	Engine Controls and Fuel - 5.3L or 6.2L - [Link target (target-id 324290-) not found]
P062F	Data Communications - [Link target (target-id 272300-) not found]
P062F	Driver Assistance Systems - [Link target (target-id 299153-) not found]
P062F	Automatic Transmission - 10L80 - [Link target (target-id 341476-) not found]
P0630	Engine Controls and Fuel - 3.0L Diesel - [Link target (target-id 323900-) not found]
P0630	Engine Controls and Fuel - 5.3L or 6.2L - [Link target (target-id 324290-) not found]
P0630	Data Communications - [Link target (target-id 272300-) not found]
P0633	Immobilizer - [Link target (target-id 142528-) not found]
P0634	Data Communications - [Link target (target-id 272300-) not found]
P0641	Antilock Brake System - [Link target (target-id 359723-) not found]
P0641	Engine Controls and Fuel - 3.0L Diesel - [Link target (target-id 307713-) not found]
P0641	Engine Controls and Fuel - 5.3L or 6.2L - [Link target (target-id 227878-) not found]
P0641	Wiring Systems and Power Management - [Link target (target-id 327177-) not found]
P0645	HVAC - Automatic - [Link target (target-id 69300-) not found]
P0646	HVAC - Automatic - [Link target (target-id 69300-) not found]

DTC	Diagnostic Procedure
P0647	HVAC - Automatic - [Link target (target-id 69300-) not found]
P064D	Engine Controls and Fuel - 3.0L Diesel - [Link target (target-id 323900-) not found]
P064D	Engine Controls and Fuel - 5.3L or 6.2L - [Link target (target-id 324290-) not found]
P064E	Engine Controls and Fuel - 3.0L Diesel - [Link target (target-id 323900-) not found]
P064E	Engine Controls and Fuel - 5.3L or 6.2L - [Link target (target-id 324290-) not found]
P064F	Engine Controls and Fuel - 3.0L Diesel - [Link target (target-id 323900-) not found]
P064F	Engine Controls and Fuel - 5.3L or 6.2L - [Link target (target-id 324290-) not found]
P064F	Data Communications - [Link target (target-id 272300-) not found]
P0651	Antilock Brake System - [Link target (target-id 359723-) not found]
P0651	Engine Controls and Fuel - 3.0L Diesel - [Link target (target-id 307713-) not found]
P0651	Engine Controls and Fuel - 5.3L or 6.2L - [Link target (target-id 227878-) not found]
P0651	Wiring Systems and Power Management - [Link target (target-id 327177-) not found]
P0658	Automatic Transmission - 10L80 - [Link target (target-id 300998-) not found]
P0659	Automatic Transmission - 10L80 - [Link target (target-id 300998-) not found]
P066A	Engine Controls and Fuel - 3.0L Diesel - [Link target (target-id 309306-) not found]
P066B	Engine Controls and Fuel - 3.0L Diesel - [Link target (target-id 309306-) not found]
P066C	Engine Controls and Fuel - 3.0L Diesel - [Link target (target-id 309306-) not found]
P066D	Engine Controls and Fuel - 3.0L Diesel - [Link target (target-id 309306-) not found]
P066E	Engine Controls and Fuel - 3.0L Diesel - [Link target (target-id 309306-) not found]
P066F	Engine Controls and Fuel - 3.0L Diesel - [Link target (target-id 309306-) not found]
P0671	Engine Controls and Fuel - 3.0L Diesel - [Link target (target-id 309306-) not found]
P0672	Engine Controls and Fuel - 3.0L Diesel - [Link target (target-id 309306-) not found]
P0673	Engine Controls and Fuel - 3.0L Diesel - [Link target (target-id 309306-) not found]
P0674	Engine Controls and Fuel - 3.0L Diesel - [Link target (target-id 309306-) not found]
P0675	Engine Controls and Fuel - 3.0L Diesel - [Link target (target-id 309306-) not found]
P0676	Engine Controls and Fuel - 3.0L Diesel - [Link target (target-id 309306-) not found]
P067A	Engine Controls and Fuel - 3.0L Diesel - [Link target (target-id 309306-) not found]
P067B	Engine Controls and Fuel - 3.0L Diesel - [Link target (target-id 309306-) not found]
P067C	Engine Controls and Fuel - 3.0L Diesel - [Link target (target-id 309306-) not found]
P067D	Engine Controls and Fuel - 3.0L Diesel - [Link target (target-id 309306-) not found]
P067E	Engine Controls and Fuel - 3.0L Diesel - [Link target (target-id 309306-) not found]
P067F	Engine Controls and Fuel - 3.0L Diesel - [Link target (target-id 309306-) not found]
P0685	Engine Controls and Fuel - 3.0L Diesel - [Link target (target-id 307071-) not found]
P0685	Engine Controls and Fuel - 5.3L or 6.2L - [Link target (target-id 301450-) not found]
P0686	Engine Controls and Fuel - 3.0L Diesel - [Link target (target-id 307071-) not found]
P0686	Engine Controls and Fuel - 5.3L or 6.2L - [Link target (target-id 301450-) not found]
P0687	Engine Controls and Fuel - 3.0L Diesel - [Link target (target-id 307071-) not found]
P0687	Engine Controls and Fuel - 5.3L or 6.2L - [Link target (target-id 301450-) not found]
P0689	Engine Controls and Fuel - 3.0L Diesel - [Link target (target-id 307071-) not found]
P0689	Engine Controls and Fuel - 5.3L or 6.2L - [Link target (target-id 301450-) not found]
P0690	Engine Controls and Fuel - 3.0L Diesel - [Link target (target-id 307071-) not found]
P0690	Engine Controls and Fuel - 5.3L or 6.2L - [Link target (target-id 301450-) not found]

DTC	Diagnostic Procedure
P0697	Antilock Brake System - [Link target (target-id 359723-) not found]
P0697	Engine Controls and Fuel - 3.0L Diesel - [Link target (target-id 307713-) not found]
P0697	Engine Controls and Fuel - 5.3L or 6.2L - [Link target (target-id 227878-) not found]
P0697	Wiring Systems and Power Management - [Link target (target-id 327177-) not found]
P069E	Engine Controls and Fuel - 5.3L or 6.2L - [Link target (target-id 276019-) not found]
P06A3	Antilock Brake System - [Link target (target-id 359723-) not found]
P06A3	Engine Controls and Fuel - 3.0L Diesel - [Link target (target-id 307713-) not found]
P06A3	Engine Controls and Fuel - 5.3L or 6.2L - [Link target (target-id 227878-) not found]
P06A3	Wiring Systems and Power Management - [Link target (target-id 327177-) not found]
P06AF	Engine Controls and Fuel - 3.0L Diesel - [Link target (target-id 309307-) not found]
P06AF	Engine Controls and Fuel - 5.3L or 6.2L - [Link target (target-id 327557-) not found]
P06AF	Automatic Transmission - 10L80 - [Link target (target-id 312855-) not found]
P06B6	Engine Controls and Fuel - 5.3L or 6.2L - [Link target (target-id 227713-) not found]
P06B7	Engine Controls and Fuel - 5.3L or 6.2L - [Link target (target-id 227713-) not found]
P06B8	Data Communications - [Link target (target-id 272300-) not found]
P06C5	Engine Controls and Fuel - 3.0L Diesel - [Link target (target-id 309308-) not found]
P06C6	Engine Controls and Fuel - 3.0L Diesel - [Link target (target-id 309308-) not found]
P06C7	Engine Controls and Fuel - 3.0L Diesel - [Link target (target-id 309308-) not found]
P06C8	Engine Controls and Fuel - 3.0L Diesel - [Link target (target-id 309308-) not found]
P06C9	Engine Controls and Fuel - 3.0L Diesel - [Link target (target-id 309308-) not found]
P06CA	Engine Controls and Fuel - 3.0L Diesel - [Link target (target-id 309308-) not found]
P06D1	Engine Controls and Fuel - 3.0L Diesel - [Link target (target-id 323900-) not found]
P06D1	Engine Controls and Fuel - 5.3L or 6.2L - [Link target (target-id 324290-) not found]
P06DA	Engine Mechanical - 3.0L Diesel - [Link target (target-id 311941-) not found]
P06DA	Engine Mechanical - 5.3L or 6.2L - [Link target (target-id 294343-) not found]
P06DB	Engine Mechanical - 3.0L Diesel - [Link target (target-id 311941-) not found]
P06DB	Engine Mechanical - 5.3L or 6.2L - [Link target (target-id 294343-) not found]
P06DC	Engine Mechanical - 3.0L Diesel - [Link target (target-id 311941-) not found]
P06DC	Engine Mechanical - 5.3L or 6.2L - [Link target (target-id 294343-) not found]
P06DD	Engine Mechanical - 3.0L Diesel - [Link target (target-id 311941-) not found]
P06DD	Engine Mechanical - 5.3L or 6.2L - [Link target (target-id 294343-) not found]
P06EC	Engine Controls and Fuel - 5.3L or 6.2L - [Link target (target-id 276019-) not found]
P0700	Engine Controls and Fuel - 3.0L Diesel - [Link target (target-id 327564-) not found]
P0700	Engine Controls and Fuel - 5.3L or 6.2L - [Link target (target-id 276019-) not found]
P0711	Automatic Transmission - 10L80 - [Link target (target-id 278293-) not found]
P0712	Automatic Transmission - 10L80 - [Link target (target-id 278293-) not found]
P0713	Automatic Transmission - 10L80 - [Link target (target-id 278293-) not found]
P0716	Automatic Transmission - 10L80 - [Link target (target-id 284257-) not found]
P0717	Automatic Transmission - 10L80 - [Link target (target-id 284257-) not found]
P0721	Automatic Transmission - 10L80 - [Link target (target-id 346948-) not found]
P0722	Automatic Transmission - 10L80 - [Link target (target-id 346948-) not found]
P0723	Automatic Transmission - 10L80 - [Link target (target-id 346948-) not found]

DTC	Diagnostic Procedure
P073D	Electronic Transmission Range Select - [Link target (target-id 325570-) not found]
P073E	Electronic Transmission Range Select - [Link target (target-id 325570-) not found]
P0741	Automatic Transmission - 10L80 - [Link target (target-id 284324-) not found]
P0746	Automatic Transmission - 10L80 - [Link target (target-id 278297-) not found]
P0747	Automatic Transmission - 10L80 - [Link target (target-id 278297-) not found]
P0776	Automatic Transmission - 10L80 - [Link target (target-id 278298-) not found]
P0777	Automatic Transmission - 10L80 - [Link target (target-id 278298-) not found]
P077C	Automatic Transmission - 10L80 - [Link target (target-id 346948-) not found]
P077D	Automatic Transmission - 10L80 - [Link target (target-id 346948-) not found]
P0796	Automatic Transmission - 10L80 - [Link target (target-id 278299-) not found]
P0797	Automatic Transmission - 10L80 - [Link target (target-id 278299-) not found]
P07B3	Electronic Transmission Range Select - [Link target (target-id 349898-) not found]
P07B4	Electronic Transmission Range Select - [Link target (target-id 349898-) not found]
P07B5	Electronic Transmission Range Select - [Link target (target-id 349898-) not found]
P07B9	Electronic Transmission Range Select - [Link target (target-id 349898-) not found]
P07BA	Electronic Transmission Range Select - [Link target (target-id 349898-) not found]
P07BB	Electronic Transmission Range Select - [Link target (target-id 349898-) not found]
P07BE	Electronic Transmission Range Select - [Link target (target-id 349898-) not found]
P07BF	Automatic Transmission - 10L80 - [Link target (target-id 284257-) not found]
P07C0	Automatic Transmission - 10L80 - [Link target (target-id 284257-) not found]
P07E4	Electronic Transmission Range Select - [Link target (target-id 325570-) not found]
P07E5	Electronic Transmission Range Select - [Link target (target-id 325570-) not found]
P0800	Engine Controls and Fuel - 5.3L or 6.2L - [Link target (target-id 276019-) not found]
P0815	Automatic Transmission - 10L80 - [Link target (target-id 321006-) not found]
P0816	Automatic Transmission - 10L80 - [Link target (target-id 321006-) not found]
P0826	Automatic Transmission - 10L80 - [Link target (target-id 321006-) not found]
P082A	Electronic Transmission Range Select - [Link target (target-id 349898-) not found]
P082D	Electronic Transmission Range Select - [Link target (target-id 349898-) not found]
P0856	Antilock Brake System - [Link target (target-id 165434-) not found]
P089B	Electronic Transmission Range Select - [Link target (target-id 349898-) not found]
P08A0	Electronic Transmission Range Select - [Link target (target-id 349898-) not found]
P08FF	Engine Controls and Fuel - 3.0L Diesel - [Link target (target-id 323900-) not found]
P08FF	Engine Controls and Fuel - 5.3L or 6.2L - [Link target (target-id 324290-) not found]
P095E	Engine Heating and Cooling - [Link target (target-id 350313-) not found]
P0960	Automatic Transmission - 10L80 - [Link target (target-id 300999-) not found]
P0962	Automatic Transmission - 10L80 - [Link target (target-id 300999-) not found]
P0963	Automatic Transmission - 10L80 - [Link target (target-id 300999-) not found]
P0964	Automatic Transmission - 10L80 - [Link target (target-id 300999-) not found]
P0966	Automatic Transmission - 10L80 - [Link target (target-id 300999-) not found]
P0967	Automatic Transmission - 10L80 - [Link target (target-id 300999-) not found]
P0968	Automatic Transmission - 10L80 - [Link target (target-id 300999-) not found]
P0970	Automatic Transmission - 10L80 - [Link target (target-id 300999-) not found]

DTC	Diagnostic Procedure
P0971	Automatic Transmission - 10L80 - [Link target (target-id 300999-) not found]
P0A7B	Engine Controls and Fuel - 5.3L or 6.2L - [Link target (target-id 276019-) not found]
P0AC4	Engine Controls and Fuel - 5.3L or 6.2L - [Link target (target-id 276019-) not found]
P0CA1	Engine Controls and Fuel - 5.3L or 6.2L - [Link target (target-id 276019-) not found]
P0E32	Starting, Charging, and Low Voltage Energy Storage - [Link target (target-id 334682-) not found]
P0E33	Starting, Charging, and Low Voltage Energy Storage - [Link target (target-id 334682-) not found]
P0E34	Starting, Charging, and Low Voltage Energy Storage - [Link target (target-id 334682-) not found]
P0E37	Starting, Charging, and Low Voltage Energy Storage - [Link target (target-id 334684-) not found]
P0E38	Starting, Charging, and Low Voltage Energy Storage - [Link target (target-id 334684-) not found]
P0E39	Starting, Charging, and Low Voltage Energy Storage - [Link target (target-id 334684-) not found]
P0EFF	Data Communications - [Link target (target-id 332897-) not found]
P0FFF	Starting, Charging, and Low Voltage Energy Storage - [Link target (target-id 355759-) not found]
P1002	Starting, Charging, and Low Voltage Energy Storage - [Link target (target-id 313528-) not found]
P1005	Engine Controls and Fuel - 3.0L Diesel - [Link target (target-id 307795-) not found]
P1005	Engine Controls and Fuel - 5.3L or 6.2L - [Link target (target-id 309964-) not found]
P1006	Engine Heating and Cooling - [Link target (target-id 330897-) not found]
P100B	Engine Controls and Fuel - 3.0L Diesel - [Link target (target-id 314843-) not found]
P100C	Starting, Charging, and Low Voltage Energy Storage - [Link target (target-id 280530-) not found]
P100D	Starting, Charging, and Low Voltage Energy Storage - [Link target (target-id 280530-) not found]
P100F	Engine Heating and Cooling - [Link target (target-id 330897-) not found]
P1010	Engine Heating and Cooling - [Link target (target-id 350313-) not found]
P1018	Engine Controls and Fuel - 3.0L Diesel - [Link target (target-id 350381-) not found]
P1019	Engine Controls and Fuel - 3.0L Diesel - [Link target (target-id 350381-) not found]
P1029	Engine Controls and Fuel - 3.0L Diesel - [Link target (target-id 309309-) not found]
P1029	Engine Controls and Fuel - 5.3L or 6.2L - [Link target (target-id 327484-) not found]
P102A	Engine Controls and Fuel - 3.0L Diesel - [Link target (target-id 309309-) not found]
P102A	Engine Controls and Fuel - 5.3L or 6.2L - [Link target (target-id 327484-) not found]
P102B	Engine Controls and Fuel - 3.0L Diesel - [Link target (target-id 309309-) not found]
P102B	Engine Controls and Fuel - 5.3L or 6.2L - [Link target (target-id 327484-) not found]
P1037	Engine Controls and Fuel - 3.0L Diesel - [Link target (target-id 307723-) not found]
P103B	Engine Controls and Fuel - 5.3L or 6.2L - [Link target (target-id 301696-) not found]
P103C	Engine Controls and Fuel - 5.3L or 6.2L - [Link target (target-id 301696-) not found]
P103D	Engine Controls and Fuel - 3.0L Diesel - [Link target (target-id 327050-) not found]
P103D	Engine Controls and Fuel - 5.3L or 6.2L - [Link target (target-id 316955-) not found]
P1048	Engine Controls and Fuel - 3.0L Diesel - [Link target (target-id 307532-) not found]
P1049	Engine Controls and Fuel - 3.0L Diesel - [Link target (target-id 307532-) not found]
P1089	Engine Controls and Fuel - 3.0L Diesel - [Link target (target-id 307495-) not found]
P109F	Engine Heating and Cooling - [Link target (target-id 351643-) not found]
P10A1	Engine Heating and Cooling - [Link target (target-id 351643-) not found]
P10A3	Engine Controls and Fuel - 5.3L or 6.2L - [Link target (target-id 333138-) not found]
P10A4	Engine Controls and Fuel - 5.3L or 6.2L - [Link target (target-id 333138-) not found]
P10A5	Engine Controls and Fuel - 5.3L or 6.2L - [Link target (target-id 333138-) not found]

DTC	Diagnostic Procedure
P10A6	Engine Controls and Fuel - 5.3L or 6.2L - [Link target (target-id 333138-) not found]
P10A7	Engine Controls and Fuel - 5.3L or 6.2L - [Link target (target-id 333138-) not found]
P10A8	Engine Controls and Fuel - 5.3L or 6.2L - [Link target (target-id 333138-) not found]
P10A9	Engine Controls and Fuel - 5.3L or 6.2L - [Link target (target-id 333138-) not found]
P10AA	Engine Controls and Fuel - 5.3L or 6.2L - [Link target (target-id 333138-) not found]
P10AB	Engine Controls and Fuel - 5.3L or 6.2L - [Link target (target-id 333138-) not found]
P10AC	Engine Controls and Fuel - 5.3L or 6.2L - [Link target (target-id 333138-) not found]
P10AD	Engine Controls and Fuel - 5.3L or 6.2L - [Link target (target-id 333138-) not found]
P10AE	Engine Controls and Fuel - 5.3L or 6.2L - [Link target (target-id 333138-) not found]
P10AF	Engine Controls and Fuel - 5.3L or 6.2L - [Link target (target-id 333138-) not found]
P10B0	Engine Controls and Fuel - 5.3L or 6.2L - [Link target (target-id 333138-) not found]
P10B1	Engine Controls and Fuel - 5.3L or 6.2L - [Link target (target-id 333138-) not found]
P10B2	Engine Controls and Fuel - 5.3L or 6.2L - [Link target (target-id 333138-) not found]
P10BA	Engine Controls and Fuel - 3.0L Diesel - [Link target (target-id 328386-) not found]
P10BC	Engine Controls and Fuel - 5.3L or 6.2L - [Link target (target-id 333002-) not found]
P10C0	Engine Controls and Fuel - 3.0L Diesel - [Link target (target-id 347128-) not found]
P10C1	Engine Controls and Fuel - 3.0L Diesel - [Link target (target-id 313019-) not found]
P10C6	Engine Controls and Fuel - 3.0L Diesel - [Link target (target-id 327050-) not found]
P10C6	Engine Controls and Fuel - 5.3L or 6.2L - [Link target (target-id 316955-) not found]
P10C9	Engine Controls and Fuel - 3.0L Diesel - [Link target (target-id 313852-) not found]
P10CA	Engine Controls and Fuel - 3.0L Diesel - [Link target (target-id 313852-) not found]
P10D5	Engine Controls and Fuel - 3.0L Diesel - [Link target (target-id 313003-) not found]
P10D6	Engine Controls and Fuel - 3.0L Diesel - [Link target (target-id 313004-) not found]
P10D7	Engine Controls and Fuel - 3.0L Diesel - [Link target (target-id 313004-) not found]
P10D8	Engine Controls and Fuel - 3.0L Diesel - [Link target (target-id 313004-) not found]
P10D9	Engine Controls and Fuel - 3.0L Diesel - [Link target (target-id 313853-) not found]
P10DA	Engine Controls and Fuel - 3.0L Diesel - [Link target (target-id 313854-) not found]
P10DB	Engine Controls and Fuel - 3.0L Diesel - [Link target (target-id 313854-) not found]
P10DC	Engine Controls and Fuel - 3.0L Diesel - [Link target (target-id 313855-) not found]
P10DD	Engine Controls and Fuel - 3.0L Diesel - [Link target (target-id 313855-) not found]
P10E6	Engine Controls and Fuel - 3.0L Diesel - [Link target (target-id 325593-) not found]
P10E7	Engine Controls and Fuel - 3.0L Diesel - [Link target (target-id 325593-) not found]
P10E8	Engine Controls and Fuel - 3.0L Diesel - [Link target (target-id 325593-) not found]
P10EA	Engine Controls and Fuel - 3.0L Diesel - [Link target (target-id 325593-) not found]
P10EB	Engine Controls and Fuel - 3.0L Diesel - [Link target (target-id 347128-) not found]
P10EC	Engine Controls and Fuel - 3.0L Diesel - [Link target (target-id 313019-) not found]
P10ED	Engine Controls and Fuel - 3.0L Diesel - [Link target (target-id 313019-) not found]
P10F3	Engine Controls and Fuel - 3.0L Diesel - [Link target (target-id 313856-) not found]
P10F4	Engine Controls and Fuel - 3.0L Diesel - [Link target (target-id 309311-) not found]
P10F5	Engine Controls and Fuel - 3.0L Diesel - [Link target (target-id 327050-) not found]
P10F5	Engine Controls and Fuel - 5.3L or 6.2L - [Link target (target-id 316955-) not found]
P1101	Engine Controls and Fuel - 5.3L or 6.2L - [Link target (target-id 333303-) not found]

DTC	Diagnostic Procedure
P111F	Engine Controls and Fuel - 5.3L or 6.2L - [Link target (target-id 324301-) not found]
P113B	Engine Controls and Fuel - 3.0L Diesel - [Link target (target-id 347083-) not found]
P113C	Engine Controls and Fuel - 3.0L Diesel - [Link target (target-id 347083-) not found]
P113D	Engine Controls and Fuel - 3.0L Diesel - [Link target (target-id 347083-) not found]
P115E	Engine Controls and Fuel - 3.0L Diesel - [Link target (target-id 338020-) not found]
P115F	Engine Controls and Fuel - 3.0L Diesel - [Link target (target-id 338020-) not found]
P1160	Engine Controls and Fuel - 3.0L Diesel - [Link target (target-id 338020-) not found]
P116A	Engine Controls and Fuel - 3.0L Diesel - [Link target (target-id 338020-) not found]
P116B	Engine Controls and Fuel - 3.0L Diesel - [Link target (target-id 338020-) not found]
P116C	Engine Controls and Fuel - 3.0L Diesel - [Link target (target-id 338020-) not found]
P116D	Engine Controls and Fuel - 3.0L Diesel - [Link target (target-id 338020-) not found]
P116E	Engine Controls and Fuel - 3.0L Diesel - [Link target (target-id 338020-) not found]
P116F	Engine Controls and Fuel - 3.0L Diesel - [Link target (target-id 338020-) not found]
P1176	Engine Controls and Fuel - 5.3L or 6.2L - [Link target (target-id 304085-) not found]
P1177	Engine Controls and Fuel - 3.0L Diesel - [Link target (target-id 311940-) not found]
P1177	Engine Controls and Fuel - 5.3L or 6.2L - [Link target (target-id 304085-) not found]
P1178	Engine Controls and Fuel - 5.3L or 6.2L - [Link target (target-id 304112-) not found]
P117A	Engine Controls and Fuel - 3.0L Diesel - [Link target (target-id 327050-) not found]
P117A	Engine Controls and Fuel - 5.3L or 6.2L - [Link target (target-id 316955-) not found]
P117F	Engine Controls and Fuel - 3.0L Diesel - [Link target (target-id 347037-) not found]
P118B	Engine Controls and Fuel - 3.0L Diesel - [Link target (target-id 350376-) not found]
P118E	Engine Controls and Fuel - 3.0L Diesel - [Link target (target-id 313400-) not found]
P118F	Engine Controls and Fuel - 3.0L Diesel - [Link target (target-id 313401-) not found]
P1192	Engine Controls and Fuel - 3.0L Diesel - [Link target (target-id 338020-) not found]
P1193	Engine Controls and Fuel - 3.0L Diesel - [Link target (target-id 338020-) not found]
P1194	Engine Controls and Fuel - 3.0L Diesel - [Link target (target-id 338020-) not found]
P1196	Engine Controls and Fuel - 3.0L Diesel - [Link target (target-id 313401-) not found]
P1199	Engine Controls and Fuel - 3.0L Diesel - [Link target (target-id 327454-) not found]
P119A	Engine Controls and Fuel - 3.0L Diesel - [Link target (target-id 338020-) not found]
P119B	Engine Controls and Fuel - 3.0L Diesel - [Link target (target-id 338020-) not found]
P119C	Engine Controls and Fuel - 3.0L Diesel - [Link target (target-id 338020-) not found]
P119D	Engine Controls and Fuel - 3.0L Diesel - [Link target (target-id 350348-) not found]
P119E	Engine Controls and Fuel - 3.0L Diesel - [Link target (target-id 350348-) not found]
P119F	Engine Controls and Fuel - 3.0L Diesel - [Link target (target-id 350348-) not found]
P11BE	Engine Controls and Fuel - 3.0L Diesel - [Link target (target-id 350348-) not found]
P11BF	Engine Controls and Fuel - 3.0L Diesel - [Link target (target-id 350348-) not found]
P11C0	Engine Controls and Fuel - 3.0L Diesel - [Link target (target-id 350348-) not found]
P11C5	Engine Controls and Fuel - 3.0L Diesel - [Link target (target-id 338020-) not found]
P11C6	Engine Controls and Fuel - 3.0L Diesel - [Link target (target-id 338020-) not found]
P11C7	Engine Controls and Fuel - 3.0L Diesel - [Link target (target-id 350348-) not found]
P11C8	Engine Controls and Fuel - 3.0L Diesel - [Link target (target-id 350348-) not found]
P11CC	Engine Controls and Fuel - 3.0L Diesel - [Link target (target-id 338020-) not found]

DTC	Diagnostic Procedure
P11D0	Engine Controls and Fuel - 3.0L Diesel - [Link target (target-id 350348-) not found]
P11D1	Engine Controls and Fuel - 3.0L Diesel - [Link target (target-id 350348-) not found]
P11D2	Engine Controls and Fuel - 3.0L Diesel - [Link target (target-id 350348-) not found]
P11D3	Engine Controls and Fuel - 3.0L Diesel - [Link target (target-id 338020-) not found]
P11D5	Engine Controls and Fuel - 3.0L Diesel - [Link target (target-id 350348-) not found]
P11D8	Engine Controls and Fuel - 3.0L Diesel - [Link target (target-id 350348-) not found]
P11D9	Engine Controls and Fuel - 3.0L Diesel - [Link target (target-id 350348-) not found]
P11DA	Engine Controls and Fuel - 3.0L Diesel - [Link target (target-id 350348-) not found]
P11DB	Engine Controls and Fuel - 3.0L Diesel - [Link target (target-id 338020-) not found]
P11FC	Engine Controls and Fuel - 3.0L Diesel - [Link target (target-id 350348-) not found]
P11FD	Engine Controls and Fuel - 3.0L Diesel - [Link target (target-id 350348-) not found]
P11FE	Engine Controls and Fuel - 3.0L Diesel - [Link target (target-id 350348-) not found]
P11FF	Engine Controls and Fuel - 3.0L Diesel - [Link target (target-id 327050-) not found]
P11FF	Engine Controls and Fuel - 5.3L or 6.2L - [Link target (target-id 316955-) not found]
P122B	Engine Controls and Fuel - 3.0L Diesel - [Link target (target-id 347499-) not found]
P122C	Engine Controls and Fuel - 3.0L Diesel - [Link target (target-id 347499-) not found]
P122D	Engine Controls and Fuel - 3.0L Diesel - [Link target (target-id 307455-) not found]
P1248	Engine Controls and Fuel - 3.0L Diesel - [Link target (target-id 309301-) not found]
P1248	Engine Controls and Fuel - 5.3L or 6.2L - [Link target (target-id 324174-) not found]
P1249	Engine Controls and Fuel - 3.0L Diesel - [Link target (target-id 309301-) not found]
P1249	Engine Controls and Fuel - 5.3L or 6.2L - [Link target (target-id 324174-) not found]
P124A	Engine Controls and Fuel - 3.0L Diesel - [Link target (target-id 309301-) not found]
P124A	Engine Controls and Fuel - 5.3L or 6.2L - [Link target (target-id 324174-) not found]
P124B	Engine Controls and Fuel - 3.0L Diesel - [Link target (target-id 309301-) not found]
P124B	Engine Controls and Fuel - 5.3L or 6.2L - [Link target (target-id 324174-) not found]
P124C	Engine Controls and Fuel - 3.0L Diesel - [Link target (target-id 309301-) not found]
P124C	Engine Controls and Fuel - 5.3L or 6.2L - [Link target (target-id 324174-) not found]
P124D	Engine Controls and Fuel - 3.0L Diesel - [Link target (target-id 309301-) not found]
P124D	Engine Controls and Fuel - 5.3L or 6.2L - [Link target (target-id 324174-) not found]
P124E	Engine Controls and Fuel - 5.3L or 6.2L - [Link target (target-id 324174-) not found]
P124F	Engine Controls and Fuel - 5.3L or 6.2L - [Link target (target-id 324174-) not found]
P1255	Engine Controls and Fuel - 3.0L Diesel - [Link target (target-id 307750-) not found]
P1255	Engine Controls and Fuel - 5.3L or 6.2L - [Link target (target-id 227882-) not found]
P126E	Engine Controls and Fuel - 5.3L or 6.2L - [Link target (target-id 324301-) not found]
P126F	Engine Controls and Fuel - 5.3L or 6.2L - [Link target (target-id 324301-) not found]
P127C	Engine Controls and Fuel - 3.0L Diesel - [Link target (target-id 327458-) not found]
P127C	Engine Controls and Fuel - 5.3L or 6.2L - [Link target (target-id 324301-) not found]
P127D	Engine Controls and Fuel - 3.0L Diesel - [Link target (target-id 327458-) not found]
P128A	Engine Controls and Fuel - 5.3L or 6.2L - [Link target (target-id 324301-) not found]
P128B	Engine Controls and Fuel - 5.3L or 6.2L - [Link target (target-id 324301-) not found]
P128C	Engine Controls and Fuel - 3.0L Diesel - [Link target (target-id 327050-) not found]
P128C	Engine Controls and Fuel - 5.3L or 6.2L - [Link target (target-id 316955-) not found]

DTC	Diagnostic Procedure
P128D	Engine Controls and Fuel - 3.0L Diesel - [Link target (target-id 327050-) not found]
P128D	Engine Controls and Fuel - 5.3L or 6.2L - [Link target (target-id 316955-) not found]
P128F	Engine Controls and Fuel - 3.0L Diesel - [Link target (target-id 327050-) not found]
P128F	Engine Controls and Fuel - 5.3L or 6.2L - [Link target (target-id 316955-) not found]
P129B	Starting, Charging, and Low Voltage Energy Storage - [Link target (target-id 182379-) not found]
P129C	Starting, Charging, and Low Voltage Energy Storage - [Link target (target-id 182379-) not found]
P129F	Engine Controls and Fuel - 3.0L Diesel - [Link target (target-id 307446-) not found]
P129F	Engine Controls and Fuel - 5.3L or 6.2L - [Link target (target-id 227990-) not found]
P12A6	Engine Controls and Fuel - 3.0L Diesel - [Link target (target-id 310025-) not found]
P12A6	Engine Controls and Fuel - 5.3L or 6.2L - [Link target (target-id 327483-) not found]
P131B	Engine Controls and Fuel - 3.0L Diesel - [Link target (target-id 350381-) not found]
P131C	Engine Controls and Fuel - 3.0L Diesel - [Link target (target-id 350381-) not found]
P131D	Engine Controls and Fuel - 3.0L Diesel - [Link target (target-id 313861-) not found]
P131E	Engine Controls and Fuel - 3.0L Diesel - [Link target (target-id 313861-) not found]
P134B	Engine Controls and Fuel - 3.0L Diesel - [Link target (target-id 349542-) not found]
P134C	Engine Controls and Fuel - 3.0L Diesel - [Link target (target-id 323900-) not found]
P134C	Engine Controls and Fuel - 5.3L or 6.2L - [Link target (target-id 324290-) not found]
P135A	Engine Controls and Fuel - 5.3L or 6.2L - [Link target (target-id 228219-) not found]
P135B	Engine Controls and Fuel - 5.3L or 6.2L - [Link target (target-id 228219-) not found]
P135C	Engine Controls and Fuel - 3.0L Diesel - [Link target (target-id 327050-) not found]
P135C	Engine Controls and Fuel - 5.3L or 6.2L - [Link target (target-id 316955-) not found]
P1385	Engine Controls and Fuel - 3.0L Diesel - [Link target (target-id 313861-) not found]
P1386	Engine Controls and Fuel - 3.0L Diesel - [Link target (target-id 313861-) not found]
P1387	Engine Heating and Cooling - [Link target (target-id 341330-) not found]
P1388	Engine Controls and Fuel - 3.0L Diesel - [Link target (target-id 350355-) not found]
P1389	Engine Controls and Fuel - 3.0L Diesel - [Link target (target-id 350355-) not found]
P138A	Engine Controls and Fuel - 3.0L Diesel - [Link target (target-id 350355-) not found]
P138C	Engine Controls and Fuel - 3.0L Diesel - [Link target (target-id 350384-) not found]
P138D	Engine Controls and Fuel - 3.0L Diesel - [Link target (target-id 347070-) not found]
P138E	Engine Controls and Fuel - 3.0L Diesel - [Link target (target-id 347070-) not found]
P138F	Engine Controls and Fuel - 3.0L Diesel - [Link target (target-id 350384-) not found]
P13B1	Engine Mechanical - 3.0L Diesel - [Link target (target-id 311941-) not found]
P1400	Engine Controls and Fuel - 5.3L or 6.2L - [Link target (target-id 227952-) not found]
P1402	Engine Controls and Fuel - 3.0L Diesel - [Link target (target-id 350315-) not found]
P1407	Engine Controls and Fuel - 3.0L Diesel - [Link target (target-id 350315-) not found]
P140B	Engine Controls and Fuel - 3.0L Diesel - [Link target (target-id 307114-) not found]
P140C	Engine Controls and Fuel - 3.0L Diesel - [Link target (target-id 307114-) not found]
P140F	Engine Controls and Fuel - 3.0L Diesel - [Link target (target-id 350315-) not found]
P1419	Engine Controls and Fuel - 3.0L Diesel - [Link target (target-id 350315-) not found]
P141A	Engine Controls and Fuel - 3.0L Diesel - [Link target (target-id 350315-) not found]
P141B	Engine Controls and Fuel - 3.0L Diesel - [Link target (target-id 350315-) not found]
P141C	Engine Controls and Fuel - 3.0L Diesel - [Link target (target-id 350315-) not found]

DTC	Diagnostic Procedure
P1425	Engine Controls and Fuel - 3.0L Diesel - [Link target (target-id 347499-) not found]
P1428	Engine Controls and Fuel - 3.0L Diesel - [Link target (target-id 327137-) not found]
P142A	Engine Controls and Fuel - 3.0L Diesel - [Link target (target-id 350162-) not found]
P1434	Displays and Gauges - [Link target (target-id 280602-) not found]
P143C	Engine Controls and Fuel - 3.0L Diesel - [Link target (target-id 313862-) not found]
P1465	Starting, Charging, and Low Voltage Energy Storage - [Link target (target-id 304031-) not found]
P1466	Starting, Charging, and Low Voltage Energy Storage - [Link target (target-id 304031-) not found]
P1473	Engine Controls and Fuel - 3.0L Diesel - [Link target (target-id 350376-) not found]
P1475	Engine Controls and Fuel - 3.0L Diesel - [Link target (target-id 350376-) not found]
P1476	Engine Controls and Fuel - 3.0L Diesel - [Link target (target-id 350376-) not found]
P147B	Engine Controls and Fuel - 3.0L Diesel - [Link target (target-id 350376-) not found]
P1497	Engine Controls and Fuel - 3.0L Diesel - [Link target (target-id 350376-) not found]
P1498	Engine Controls and Fuel - 3.0L Diesel - [Link target (target-id 350376-) not found]
P149A	Engine Controls and Fuel - 3.0L Diesel - [Link target (target-id 346975-) not found]
P149F	Engine Controls and Fuel - 3.0L Diesel - [Link target (target-id 313863-) not found]
P14A0	Engine Controls and Fuel - 3.0L Diesel - [Link target (target-id 327050-) not found]
P14A0	Engine Controls and Fuel - 5.3L or 6.2L - [Link target (target-id 316955-) not found]
P14A5	Engine Controls and Fuel - 3.0L Diesel - [Link target (target-id 313864-) not found]
P14A6	Engine Controls and Fuel - 3.0L Diesel - [Link target (target-id 313864-) not found]
P14A7	Engine Controls and Fuel - 3.0L Diesel - [Link target (target-id 350355-) not found]
P14A8	Engine Controls and Fuel - 3.0L Diesel - [Link target (target-id 350355-) not found]
P14A9	Engine Controls and Fuel - 3.0L Diesel - [Link target (target-id 350355-) not found]
P14AA	Engine Controls and Fuel - 3.0L Diesel - [Link target (target-id 350355-) not found]
P14AB	Engine Controls and Fuel - 3.0L Diesel - [Link target (target-id 350355-) not found]
P14AC	Engine Controls and Fuel - 3.0L Diesel - [Link target (target-id 350355-) not found]
P14AD	Engine Controls and Fuel - 3.0L Diesel - [Link target (target-id 350355-) not found]
P14AE	Engine Controls and Fuel - 3.0L Diesel - [Link target (target-id 350355-) not found]
P14AF	Engine Controls and Fuel - 3.0L Diesel - [Link target (target-id 350355-) not found]
P14B0	Engine Controls and Fuel - 3.0L Diesel - [Link target (target-id 350355-) not found]
P14B1	Engine Controls and Fuel - 3.0L Diesel - [Link target (target-id 350355-) not found]
P14B2	Engine Controls and Fuel - 3.0L Diesel - [Link target (target-id 350355-) not found]
P14B3	Engine Controls and Fuel - 3.0L Diesel - [Link target (target-id 350355-) not found]
P14B4	Engine Controls and Fuel - 3.0L Diesel - [Link target (target-id 350355-) not found]
P14B6	Engine Controls and Fuel - 3.0L Diesel - [Link target (target-id 327050-) not found]
P14B6	Engine Controls and Fuel - 5.3L or 6.2L - [Link target (target-id 316955-) not found]
P14CD	Engine Controls and Fuel - 3.0L Diesel - [Link target (target-id 327050-) not found]
P14CD	Engine Controls and Fuel - 5.3L or 6.2L - [Link target (target-id 316955-) not found]
P14D4	Engine Controls and Fuel - 3.0L Diesel - [Link target (target-id 327050-) not found]
P14D4	Engine Controls and Fuel - 5.3L or 6.2L - [Link target (target-id 316955-) not found]
P14D5	Engine Controls and Fuel - 3.0L Diesel - [Link target (target-id 327050-) not found]
P14D5	Engine Controls and Fuel - 5.3L or 6.2L - [Link target (target-id 316955-) not found]
P14D6	Engine Controls and Fuel - 3.0L Diesel - [Link target (target-id 327050-) not found]

DTC	Diagnostic Procedure
P14D6	Engine Controls and Fuel - 5.3L or 6.2L - [Link target (target-id 316955-) not found]
P14D9	Engine Controls and Fuel - 3.0L Diesel - [Link target (target-id 350355-) not found]
P14DA	Engine Controls and Fuel - 3.0L Diesel - [Link target (target-id 350355-) not found]
P150C	Engine Controls and Fuel - 3.0L Diesel - [Link target (target-id 327050-) not found]
P150C	Engine Controls and Fuel - 5.3L or 6.2L - [Link target (target-id 316955-) not found]
P1516	Engine Controls and Fuel - 5.3L or 6.2L - [Link target (target-id 227727-) not found]
P153B	HVAC - Automatic - [Link target (target-id 359576-) not found]
P155A	Cruise Control - [Link target (target-id 226319-) not found]
P155B	Cruise Control - [Link target (target-id 226319-) not found]
P155C	Cruise Control - [Link target (target-id 226319-) not found]
P157A	Engine Controls and Fuel - 3.0L Diesel - [Link target (target-id 309640-) not found]
P1589	Driver Assistance Systems - [Link target (target-id 329008-) not found]
P15CC	Engine Controls and Fuel - 3.0L Diesel - [Link target (target-id 359322-) not found]
P15CD	Engine Controls and Fuel - 3.0L Diesel - [Link target (target-id 359322-) not found]
P15CE	Engine Controls and Fuel - 3.0L Diesel - [Link target (target-id 359322-) not found]
P15CF	Engine Controls and Fuel - 3.0L Diesel - [Link target (target-id 359322-) not found]
P15D4	Engine Controls and Fuel - 3.0L Diesel - [Link target (target-id 359322-) not found]
P15D5	Engine Controls and Fuel - 3.0L Diesel - [Link target (target-id 359322-) not found]
P15D6	Engine Controls and Fuel - 3.0L Diesel - [Link target (target-id 359322-) not found]
P15D7	Engine Controls and Fuel - 3.0L Diesel - [Link target (target-id 359322-) not found]
P15F8	Antilock Brake System - [Link target (target-id 227356-) not found]
P15FD	Antilock Brake System - [Link target (target-id 272641-) not found]
P160A	Engine Controls and Fuel - 3.0L Diesel - [Link target (target-id 323900-) not found]
P160A	Engine Controls and Fuel - 5.3L or 6.2L - [Link target (target-id 324290-) not found]
P160D	Engine Controls and Fuel - 3.0L Diesel - [Link target (target-id 323900-) not found]
P160D	Engine Controls and Fuel - 5.3L or 6.2L - [Link target (target-id 324290-) not found]
P160E	Engine Controls and Fuel - 3.0L Diesel - [Link target (target-id 323900-) not found]
P160E	Engine Controls and Fuel - 5.3L or 6.2L - [Link target (target-id 324290-) not found]
P161C	Engine Controls and Fuel - 3.0L Diesel - [Link target (target-id 323900-) not found]
P161C	Engine Controls and Fuel - 5.3L or 6.2L - [Link target (target-id 324290-) not found]
P163A	Engine Controls and Fuel - 3.0L Diesel - [Link target (target-id 325593-) not found]
P163A	Engine Controls and Fuel - 5.3L or 6.2L - [Link target (target-id 329292-) not found]
P163B	Engine Controls and Fuel - 3.0L Diesel - [Link target (target-id 325593-) not found]
P1682	Engine Controls and Fuel - 3.0L Diesel - [Link target (target-id 307071-) not found]
P1682	Engine Controls and Fuel - 5.3L or 6.2L - [Link target (target-id 301450-) not found]
P169F	Engine Controls and Fuel - 3.0L Diesel - [Link target (target-id 347030-) not found]
P16A7	Engine Controls and Fuel - 5.3L or 6.2L - [Link target (target-id 301450-) not found]
P16AF	Engine Controls and Fuel - 5.3L or 6.2L - [Link target (target-id 301450-) not found]
P16B3	Engine Controls and Fuel - 5.3L or 6.2L - [Link target (target-id 301450-) not found]
P16BC	Engine Controls and Fuel - 3.0L Diesel - [Link target (target-id 307071-) not found]
P16BC	Engine Controls and Fuel - 5.3L or 6.2L - [Link target (target-id 301450-) not found]
P16BD	Engine Controls and Fuel - 3.0L Diesel - [Link target (target-id 307071-) not found]

DTC	Diagnostic Procedure
P16BD	Engine Controls and Fuel - 5.3L or 6.2L - [Link target (target-id 301450-) not found]
P16BF	Engine Controls and Fuel - 3.0L Diesel - [Link target (target-id 307071-) not found]
P16BF	Engine Controls and Fuel - 5.3L or 6.2L - [Link target (target-id 301450-) not found]
P16D4	Starting, Charging, and Low Voltage Energy Storage - [Link target (target-id 314848-) not found]
P16D5	Starting, Charging, and Low Voltage Energy Storage - [Link target (target-id 314848-) not found]
P16D6	Starting, Charging, and Low Voltage Energy Storage - [Link target (target-id 314848-) not found]
P16D7	Engine Controls and Fuel - 3.0L Diesel - [Link target (target-id 309640-) not found]
P16D7	Engine Controls and Fuel - 5.3L or 6.2L - [Link target (target-id 327488-) not found]
P16D8	Engine Controls and Fuel - 3.0L Diesel - [Link target (target-id 309640-) not found]
P16D8	Engine Controls and Fuel - 5.3L or 6.2L - [Link target (target-id 327488-) not found]
P16D9	Engine Controls and Fuel - 3.0L Diesel - [Link target (target-id 309640-) not found]
P16D9	Engine Controls and Fuel - 5.3L or 6.2L - [Link target (target-id 327488-) not found]
P16DD	Starting, Charging, and Low Voltage Energy Storage - [Link target (target-id 315564-) not found]
P16DE	Starting, Charging, and Low Voltage Energy Storage - [Link target (target-id 315564-) not found]
P16DF	Starting, Charging, and Low Voltage Energy Storage - [Link target (target-id 315564-) not found]
P16E1	Starting, Charging, and Low Voltage Energy Storage - [Link target (target-id 314850-) not found]
P16E2	Starting, Charging, and Low Voltage Energy Storage - [Link target (target-id 314850-) not found]
P16E3	Starting, Charging, and Low Voltage Energy Storage - [Link target (target-id 314850-) not found]
P16E9	Engine Controls and Fuel - 3.0L Diesel - [Link target (target-id 323900-) not found]
P16E9	Engine Controls and Fuel - 5.3L or 6.2L - [Link target (target-id 324290-) not found]
P16E9	Data Communications - [Link target (target-id 272300-) not found]
P16EA	Engine Controls and Fuel - 3.0L Diesel - [Link target (target-id 323900-) not found]
P16EA	Engine Controls and Fuel - 5.3L or 6.2L - [Link target (target-id 324290-) not found]
P16EA	Data Communications - [Link target (target-id 272300-) not found]
P16EB	Engine Controls and Fuel - 3.0L Diesel - [Link target (target-id 323900-) not found]
P16EB	Engine Controls and Fuel - 5.3L or 6.2L - [Link target (target-id 324290-) not found]
P16EB	Data Communications - [Link target (target-id 272300-) not found]
P16EC	Engine Controls and Fuel - 3.0L Diesel - [Link target (target-id 323900-) not found]
P16EC	Engine Controls and Fuel - 5.3L or 6.2L - [Link target (target-id 324290-) not found]
P16EC	Data Communications - [Link target (target-id 272300-) not found]
P16ED	Engine Controls and Fuel - 3.0L Diesel - [Link target (target-id 323900-) not found]
P16ED	Engine Controls and Fuel - 5.3L or 6.2L - [Link target (target-id 324290-) not found]
P16ED	Data Communications - [Link target (target-id 272300-) not found]
P16EE	Engine Controls and Fuel - 3.0L Diesel - [Link target (target-id 323900-) not found]
P16EE	Engine Controls and Fuel - 5.3L or 6.2L - [Link target (target-id 324290-) not found]
P16EE	Data Communications - [Link target (target-id 272300-) not found]
P16EF	Engine Controls and Fuel - 3.0L Diesel - [Link target (target-id 323900-) not found]
P16EF	Engine Controls and Fuel - 5.3L or 6.2L - [Link target (target-id 324290-) not found]
P16EF	Data Communications - [Link target (target-id 272300-) not found]
P16F0	Engine Controls and Fuel - 3.0L Diesel - [Link target (target-id 323900-) not found]
P16F0	Engine Controls and Fuel - 5.3L or 6.2L - [Link target (target-id 324290-) not found]
P16F0	Data Communications - [Link target (target-id 272300-) not found]

DTC	Diagnostic Procedure
P16F0	Driver Assistance Systems - [Link target (target-id 299166-) not found]
P16F1	Data Communications - [Link target (target-id 272300-) not found]
P16F2	Data Communications - [Link target (target-id 272300-) not found]
P16F3	Engine Controls and Fuel - 3.0L Diesel - [Link target (target-id 323900-) not found]
P16F3	Engine Controls and Fuel - 5.3L or 6.2L - [Link target (target-id 324290-) not found]
P16F3	Data Communications - [Link target (target-id 272300-) not found]
P16F3	Driver Assistance Systems - [Link target (target-id 329009-) not found]
P16F3	Automatic Transmission - 10L80 - [Link target (target-id 341476-) not found]
P16F4	Electronic Transmission Range Select - [Link target (target-id 325570-) not found]
P16F4	Electronic Transmission Range Select - [Link target (target-id 306241-) not found]
P16F9	Data Communications - [Link target (target-id 272300-) not found]
P16FA	Engine Controls and Fuel - 3.0L Diesel - [Link target (target-id 347030-) not found]
P16FD	Data Communications - [Link target (target-id 272300-) not found]
P16FD	Driver Assistance Systems - [Link target (target-id 329010-) not found]
P16FE	Data Communications - [Link target (target-id 272300-) not found]
P16FE	Driver Assistance Systems - [Link target (target-id 329010-) not found]
P1700	Engine Controls and Fuel - 5.3L or 6.2L - [Link target (target-id 276019-) not found]
P172A	Automatic Transmission - 10L80 - [Link target (target-id 346948-) not found]
P175E	Automatic Transmission - 10L80 - [Link target (target-id 289033-) not found]
P1762	Engine Controls and Fuel - 3.0L Diesel - [Link target (target-id 327050-) not found]
P1762	Engine Controls and Fuel - 5.3L or 6.2L - [Link target (target-id 316955-) not found]
P176B	Automatic Transmission - 10L80 - [Link target (target-id 284259-) not found]
P176C	Automatic Transmission - 10L80 - [Link target (target-id 284259-) not found]
P176D	Automatic Transmission - 10L80 - [Link target (target-id 284259-) not found]
P1783	Automatic Transmission - 10L80 - [Link target (target-id 284257-) not found]
P1787	Electronic Transmission Range Select - [Link target (target-id 325570-) not found]
P1789	Electronic Transmission Range Select - [Link target (target-id 325570-) not found]
P178F	Automatic Transmission - 10L80 - [Link target (target-id 284259-) not found]
P17C5	Automatic Transmission - 10L80 - [Link target (target-id 284260-) not found]
P17C6	Automatic Transmission - 10L80 - [Link target (target-id 284260-) not found]
P17CC	Automatic Transmission - 10L80 - [Link target (target-id 284260-) not found]
P17CD	Automatic Transmission - 10L80 - [Link target (target-id 284260-) not found]
P17CE	Automatic Transmission - 10L80 - [Link target (target-id 284257-) not found]
P17D3	Automatic Transmission - 10L80 - [Link target (target-id 284259-) not found]
P17D4	Transfer Case - MP 3015 - [Link target (target-id 328037-) not found]
P17D4	Transfer Case - MP 3025 - [Link target (target-id 328038-) not found]
P17D6	Automatic Transmission - 10L80 - [Link target (target-id 284260-) not found]
P17DD	Starting, Charging, and Low Voltage Energy Storage - [Link target (target-id 321613-) not found]
P17DE	Starting, Charging, and Low Voltage Energy Storage - [Link target (target-id 321613-) not found]
P17DF	Starting, Charging, and Low Voltage Energy Storage - [Link target (target-id 321613-) not found]
P17E0	Electronic Transmission Range Select - [Link target (target-id 317601-) not found]
P17E1	Electronic Transmission Range Select - [Link target (target-id 317601-) not found]

DTC	Diagnostic Procedure
P17F3	Electronic Transmission Range Select - [Link target (target-id 349898-) not found]
P17F5	Automatic Transmission - 10L80 - [Link target (target-id 312078-) not found]
P17F6	Automatic Transmission - 10L80 - [Link target (target-id 312078-) not found]
P17F7	Automatic Transmission - 10L80 - [Link target (target-id 312078-) not found]
P17FA	Automatic Transmission - 10L80 - [Link target (target-id 312078-) not found]
P17FB	Automatic Transmission - 10L80 - [Link target (target-id 312078-) not found]
P17FC	Automatic Transmission - 10L80 - [Link target (target-id 312078-) not found]
P187D	Automatic Transmission - 10L80 - [Link target (target-id 312081-) not found]
P187E	Automatic Transmission - 10L80 - [Link target (target-id 312081-) not found]
P188B	Transfer Case - MP 3015 - [Link target (target-id 329311-) not found]
P189C	Automatic Transmission - 10L80 - [Link target (target-id 312082-) not found]
P189D	Electronic Transmission Range Select - [Link target (target-id 349898-) not found]
P18A1	Automatic Transmission - 10L80 - [Link target (target-id 316795-) not found]
P18A2	Automatic Transmission - 10L80 - [Link target (target-id 312857-) not found]
P18A3	Automatic Transmission - 10L80 - [Link target (target-id 312857-) not found]
P18A4	Automatic Transmission - 10L80 - [Link target (target-id 312857-) not found]
P18A8	Automatic Transmission - 10L80 - [Link target (target-id 312080-) not found]
P18AA	Automatic Transmission - 10L80 - [Link target (target-id 316795-) not found]
P18AB	Automatic Transmission - 10L80 - [Link target (target-id 316795-) not found]
P18AE	Automatic Transmission - 10L80 - [Link target (target-id 323134-) not found]
P18E7	Automatic Transmission - 10L80 - [Link target (target-id 312081-) not found]
P18E8	Automatic Transmission - 10L80 - [Link target (target-id 312081-) not found]
P1911	Electronic Transmission Range Select - [Link target (target-id 346845-) not found]
P1981	Engine Controls and Fuel - 3.0L Diesel - [Link target (target-id 350376-) not found]
P1C30	Engine Controls and Fuel - 3.0L Diesel - [Link target (target-id 347078-) not found]
P1E00	Engine Controls and Fuel - 5.3L or 6.2L - [Link target (target-id 276019-) not found]
P2002	Engine Controls and Fuel - 3.0L Diesel - [Link target (target-id 307221-) not found]
P2006	Engine Controls and Fuel - 3.0L Diesel - [Link target (target-id 335594-) not found]
P2008	Engine Controls and Fuel - 3.0L Diesel - [Link target (target-id 313019-) not found]
P2009	Engine Controls and Fuel - 3.0L Diesel - [Link target (target-id 313019-) not found]
P200A	Engine Controls and Fuel - 3.0L Diesel - [Link target (target-id 315274-) not found]
P200B	Engine Controls and Fuel - 3.0L Diesel - [Link target (target-id 313019-) not found]
P200C	Engine Controls and Fuel - 3.0L Diesel - [Link target (target-id 307570-) not found]
P200D	Engine Controls and Fuel - 3.0L Diesel - [Link target (target-id 313019-) not found]
P200E	Engine Controls and Fuel - 3.0L Diesel - [Link target (target-id 307324-) not found]
P200F	Engine Controls and Fuel - 3.0L Diesel - [Link target (target-id 313019-) not found]
P2010	Engine Controls and Fuel - 3.0L Diesel - [Link target (target-id 313019-) not found]
P2016	Engine Controls and Fuel - 3.0L Diesel - [Link target (target-id 313022-) not found]
P2017	Engine Controls and Fuel - 3.0L Diesel - [Link target (target-id 313022-) not found]
P201B	Engine Controls and Fuel - 3.0L Diesel - [Link target (target-id 313019-) not found]
P2032	Engine Controls and Fuel - 3.0L Diesel - [Link target (target-id 347083-) not found]
P2033	Engine Controls and Fuel - 3.0L Diesel - [Link target (target-id 347083-) not found]

DTC	Diagnostic Procedure
P203B	Engine Controls and Fuel - 3.0L Diesel - [Link target (target-id 350381-) not found]
P203C	Engine Controls and Fuel - 3.0L Diesel - [Link target (target-id 350381-) not found]
P203D	Engine Controls and Fuel - 3.0L Diesel - [Link target (target-id 350381-) not found]
P2047	Engine Controls and Fuel - 3.0L Diesel - [Link target (target-id 307532-) not found]
P2048	Engine Controls and Fuel - 3.0L Diesel - [Link target (target-id 307532-) not found]
P2049	Engine Controls and Fuel - 3.0L Diesel - [Link target (target-id 307532-) not found]
P204B	Engine Controls and Fuel - 3.0L Diesel - [Link target (target-id 313852-) not found]
P204C	Engine Controls and Fuel - 3.0L Diesel - [Link target (target-id 313852-) not found]
P204D	Engine Controls and Fuel - 3.0L Diesel - [Link target (target-id 313852-) not found]
P204E	Engine Controls and Fuel - 3.0L Diesel - [Link target (target-id 313852-) not found]
P2053	Engine Controls and Fuel - 3.0L Diesel - [Link target (target-id 347070-) not found]
P2054	Engine Controls and Fuel - 3.0L Diesel - [Link target (target-id 347070-) not found]
P2055	Engine Controls and Fuel - 3.0L Diesel - [Link target (target-id 347070-) not found]
P205B	Engine Controls and Fuel - 3.0L Diesel - [Link target (target-id 313865-) not found]
P205C	Engine Controls and Fuel - 3.0L Diesel - [Link target (target-id 313865-) not found]
P205D	Engine Controls and Fuel - 3.0L Diesel - [Link target (target-id 313865-) not found]
P205E	Engine Controls and Fuel - 3.0L Diesel - [Link target (target-id 313865-) not found]
P206B	Engine Controls and Fuel - 3.0L Diesel - [Link target (target-id 350381-) not found]
P206C	Engine Controls and Fuel - 3.0L Diesel - [Link target (target-id 350381-) not found]
P206D	Engine Controls and Fuel - 3.0L Diesel - [Link target (target-id 350381-) not found]
P2080	Engine Controls and Fuel - 3.0L Diesel - [Link target (target-id 347083-) not found]
P2081	Engine Controls and Fuel - 3.0L Diesel - [Link target (target-id 347083-) not found]
P2084	Engine Controls and Fuel - 3.0L Diesel - [Link target (target-id 347083-) not found]
P2085	Engine Controls and Fuel - 3.0L Diesel - [Link target (target-id 347083-) not found]
P2088	Engine Controls and Fuel - 5.3L or 6.2L - [Link target (target-id 294312-) not found]
P2089	Engine Controls and Fuel - 5.3L or 6.2L - [Link target (target-id 294312-) not found]
P208A	Engine Controls and Fuel - 3.0L Diesel - [Link target (target-id 313863-) not found]
P208B	Engine Controls and Fuel - 3.0L Diesel - [Link target (target-id 313863-) not found]
P208C	Engine Controls and Fuel - 3.0L Diesel - [Link target (target-id 313863-) not found]
P208D	Engine Controls and Fuel - 3.0L Diesel - [Link target (target-id 313863-) not found]
P2096	Engine Controls and Fuel - 5.3L or 6.2L - [Link target (target-id 228221-) not found]
P2097	Engine Controls and Fuel - 5.3L or 6.2L - [Link target (target-id 228221-) not found]
P2098	Engine Controls and Fuel - 5.3L or 6.2L - [Link target (target-id 228221-) not found]
P2099	Engine Controls and Fuel - 5.3L or 6.2L - [Link target (target-id 228221-) not found]
P20B9	Engine Controls and Fuel - 3.0L Diesel - [Link target (target-id 313853-) not found]
P20BA	Engine Controls and Fuel - 3.0L Diesel - [Link target (target-id 313853-) not found]
P20BB	Engine Controls and Fuel - 3.0L Diesel - [Link target (target-id 313853-) not found]
P20BC	Engine Controls and Fuel - 3.0L Diesel - [Link target (target-id 313853-) not found]
P20BD	Engine Controls and Fuel - 3.0L Diesel - [Link target (target-id 313856-) not found]
P20BE	Engine Controls and Fuel - 3.0L Diesel - [Link target (target-id 313856-) not found]
P20BF	Engine Controls and Fuel - 3.0L Diesel - [Link target (target-id 313856-) not found]
P20C0	Engine Controls and Fuel - 3.0L Diesel - [Link target (target-id 313856-) not found]

DTC	Diagnostic Procedure
P20C1	Engine Controls and Fuel - 3.0L Diesel - [Link target (target-id 313862-) not found]
P20C2	Engine Controls and Fuel - 3.0L Diesel - [Link target (target-id 313862-) not found]
P20C3	Engine Controls and Fuel - 3.0L Diesel - [Link target (target-id 313862-) not found]
P20C4	Engine Controls and Fuel - 3.0L Diesel - [Link target (target-id 313862-) not found]
P20E8	Engine Controls and Fuel - 3.0L Diesel - [Link target (target-id 307732-) not found]
P20E9	Engine Controls and Fuel - 3.0L Diesel - [Link target (target-id 307732-) not found]
P20EE	Engine Controls and Fuel - 3.0L Diesel - [Link target (target-id 307382-) not found]
P20F8	Engine Controls and Fuel - 3.0L Diesel - [Link target (target-id 335594-) not found]
P20FE	Engine Controls and Fuel - 3.0L Diesel - [Link target (target-id 347129-) not found]
P20FF	Engine Controls and Fuel - 3.0L Diesel - [Link target (target-id 309311-) not found]
P2101	Engine Controls and Fuel - 5.3L or 6.2L - [Link target (target-id 227727-) not found]
P2119	Engine Controls and Fuel - 5.3L or 6.2L - [Link target (target-id 227727-) not found]
P2122	Engine Controls and Fuel - 3.0L Diesel - [Link target (target-id 307694-) not found]
P2122	Engine Controls and Fuel - 5.3L or 6.2L - [Link target (target-id 227773-) not found]
P2123	Engine Controls and Fuel - 3.0L Diesel - [Link target (target-id 307694-) not found]
P2123	Engine Controls and Fuel - 5.3L or 6.2L - [Link target (target-id 227773-) not found]
P2127	Engine Controls and Fuel - 3.0L Diesel - [Link target (target-id 307694-) not found]
P2127	Engine Controls and Fuel - 5.3L or 6.2L - [Link target (target-id 227773-) not found]
P2128	Engine Controls and Fuel - 3.0L Diesel - [Link target (target-id 307694-) not found]
P2128	Engine Controls and Fuel - 5.3L or 6.2L - [Link target (target-id 227773-) not found]
P2135	Engine Controls and Fuel - 5.3L or 6.2L - [Link target (target-id 332809-) not found]
P2138	Engine Controls and Fuel - 3.0L Diesel - [Link target (target-id 307694-) not found]
P2138	Engine Controls and Fuel - 5.3L or 6.2L - [Link target (target-id 227773-) not found]
P2147	Engine Controls and Fuel - 3.0L Diesel - [Link target (target-id 309301-) not found]
P2147	Engine Controls and Fuel - 5.3L or 6.2L - [Link target (target-id 324174-) not found]
P2148	Engine Controls and Fuel - 3.0L Diesel - [Link target (target-id 309301-) not found]
P2148	Engine Controls and Fuel - 5.3L or 6.2L - [Link target (target-id 324174-) not found]
P214E	Engine Controls and Fuel - 3.0L Diesel - [Link target (target-id 313863-) not found]
P214F	Engine Controls and Fuel - 3.0L Diesel - [Link target (target-id 313853-) not found]
P2150	Engine Controls and Fuel - 3.0L Diesel - [Link target (target-id 309301-) not found]
P2150	Engine Controls and Fuel - 5.3L or 6.2L - [Link target (target-id 324174-) not found]
P2151	Engine Controls and Fuel - 3.0L Diesel - [Link target (target-id 309301-) not found]
P2151	Engine Controls and Fuel - 5.3L or 6.2L - [Link target (target-id 324174-) not found]
P2153	Engine Controls and Fuel - 3.0L Diesel - [Link target (target-id 309301-) not found]
P2153	Engine Controls and Fuel - 5.3L or 6.2L - [Link target (target-id 324174-) not found]
P2154	Engine Controls and Fuel - 3.0L Diesel - [Link target (target-id 309301-) not found]
P2154	Engine Controls and Fuel - 5.3L or 6.2L - [Link target (target-id 324174-) not found]
P2156	Engine Controls and Fuel - 5.3L or 6.2L - [Link target (target-id 324174-) not found]
P2157	Engine Controls and Fuel - 5.3L or 6.2L - [Link target (target-id 324174-) not found]
P215B	Transfer Case - MP 3015 - [Link target (target-id 328037-) not found]
P215B	Transfer Case - MP 3025 - [Link target (target-id 328038-) not found]
P216B	Engine Controls and Fuel - 5.3L or 6.2L - [Link target (target-id 324174-) not found]

DTC	Diagnostic Procedure
P216C	Engine Controls and Fuel - 5.3L or 6.2L - [Link target (target-id 324174-) not found]
P216E	Engine Controls and Fuel - 5.3L or 6.2L - [Link target (target-id 324174-) not found]
P216F	Engine Controls and Fuel - 5.3L or 6.2L - [Link target (target-id 324174-) not found]
P2176	Engine Controls and Fuel - 5.3L or 6.2L - [Link target (target-id 227727-) not found]
P217B	Engine Controls and Fuel - 5.3L or 6.2L - [Link target (target-id 324174-) not found]
P217C	Engine Controls and Fuel - 5.3L or 6.2L - [Link target (target-id 324174-) not found]
P217E	Engine Controls and Fuel - 5.3L or 6.2L - [Link target (target-id 324174-) not found]
P217F	Engine Controls and Fuel - 5.3L or 6.2L - [Link target (target-id 324174-) not found]
P2184	Engine Controls and Fuel - 3.0L Diesel - [Link target (target-id 327012-) not found]
P2185	Engine Controls and Fuel - 3.0L Diesel - [Link target (target-id 327012-) not found]
P2186	Engine Controls and Fuel - 3.0L Diesel - [Link target (target-id 327012-) not found]
P219A	Engine Controls and Fuel - 5.3L or 6.2L - [Link target (target-id 227966-) not found]
P219B	Engine Controls and Fuel - 5.3L or 6.2L - [Link target (target-id 227966-) not found]
P21A9	Engine Controls and Fuel - 3.0L Diesel - [Link target (target-id 350381-) not found]
P21AB	Engine Controls and Fuel - 3.0L Diesel - [Link target (target-id 350381-) not found]
P21C5	Engine Controls and Fuel - 3.0L Diesel - [Link target (target-id 350381-) not found]
P21CB	Engine Controls and Fuel - 3.0L Diesel - [Link target (target-id 307733-) not found]
P21DD	Engine Controls and Fuel - 3.0L Diesel - [Link target (target-id 313853-) not found]
P2201	Engine Controls and Fuel - 3.0L Diesel - [Link target (target-id 338020-) not found]
P2202	Engine Controls and Fuel - 3.0L Diesel - [Link target (target-id 338020-) not found]
P2203	Engine Controls and Fuel - 3.0L Diesel - [Link target (target-id 338020-) not found]
P2205	Engine Controls and Fuel - 3.0L Diesel - [Link target (target-id 338020-) not found]
P2206	Engine Controls and Fuel - 3.0L Diesel - [Link target (target-id 338020-) not found]
P2207	Engine Controls and Fuel - 3.0L Diesel - [Link target (target-id 338020-) not found]
P2208	Engine Controls and Fuel - 3.0L Diesel - [Link target (target-id 338020-) not found]
P2209	Engine Controls and Fuel - 3.0L Diesel - [Link target (target-id 338020-) not found]
P220A	Engine Controls and Fuel - 3.0L Diesel - [Link target (target-id 307485-) not found]
P220B	Engine Controls and Fuel - 3.0L Diesel - [Link target (target-id 307485-) not found]
P220C	Engine Controls and Fuel - 3.0L Diesel - [Link target (target-id 338020-) not found]
P220D	Engine Controls and Fuel - 3.0L Diesel - [Link target (target-id 338020-) not found]
P220E	Engine Controls and Fuel - 3.0L Diesel - [Link target (target-id 338020-) not found]
P220F	Engine Controls and Fuel - 3.0L Diesel - [Link target (target-id 338020-) not found]
P2210	Engine Controls and Fuel - 3.0L Diesel - [Link target (target-id 338020-) not found]
P2211	Engine Controls and Fuel - 3.0L Diesel - [Link target (target-id 338020-) not found]
P221C	Engine Controls and Fuel - 3.0L Diesel - [Link target (target-id 313856-) not found]
P221D	Engine Controls and Fuel - 3.0L Diesel - [Link target (target-id 313856-) not found]
P221E	Engine Controls and Fuel - 3.0L Diesel - [Link target (target-id 313862-) not found]
P221F	Engine Controls and Fuel - 3.0L Diesel - [Link target (target-id 313862-) not found]
P2227	Engine Controls and Fuel - 3.0L Diesel - [Link target (target-id 307325-) not found]
P2228	Engine Controls and Fuel - 3.0L Diesel - [Link target (target-id 307325-) not found]
P2228	Engine Controls and Fuel - 5.3L or 6.2L - [Link target (target-id 333002-) not found]
P2229	Engine Controls and Fuel - 3.0L Diesel - [Link target (target-id 307325-) not found]

DTC	Diagnostic Procedure
P2229	Engine Controls and Fuel - 5.3L or 6.2L - [Link target (target-id 333002-) not found]
P222A	Engine Controls and Fuel - 3.0L Diesel - [Link target (target-id 307325-) not found]
P222A	Engine Controls and Fuel - 5.3L or 6.2L - [Link target (target-id 333002-) not found]
P222B	Engine Controls and Fuel - 3.0L Diesel - [Link target (target-id 307325-) not found]
P222B	Engine Controls and Fuel - 5.3L or 6.2L - [Link target (target-id 333002-) not found]
P222C	Engine Controls and Fuel - 3.0L Diesel - [Link target (target-id 307325-) not found]
P222C	Engine Controls and Fuel - 5.3L or 6.2L - [Link target (target-id 333002-) not found]
P222D	Engine Controls and Fuel - 3.0L Diesel - [Link target (target-id 307325-) not found]
P222D	Engine Controls and Fuel - 5.3L or 6.2L - [Link target (target-id 333002-) not found]
P222E	Engine Controls and Fuel - 3.0L Diesel - [Link target (target-id 307325-) not found]
P222E	Engine Controls and Fuel - 5.3L or 6.2L - [Link target (target-id 333002-) not found]
P222F	Engine Controls and Fuel - 3.0L Diesel - [Link target (target-id 307325-) not found]
P222F	Engine Controls and Fuel - 5.3L or 6.2L - [Link target (target-id 333002-) not found]
P2230	Engine Controls and Fuel - 3.0L Diesel - [Link target (target-id 307325-) not found]
P2230	Engine Controls and Fuel - 5.3L or 6.2L - [Link target (target-id 333002-) not found]
P2237	Engine Controls and Fuel - 5.3L or 6.2L - [Link target (target-id 342979-) not found]
P223C	Engine Controls and Fuel - 5.3L or 6.2L - [Link target (target-id 342979-) not found]
P223D	Engine Controls and Fuel - 5.3L or 6.2L - [Link target (target-id 342979-) not found]
P223E	Engine Controls and Fuel - 5.3L or 6.2L - [Link target (target-id 342979-) not found]
P223F	Engine Controls and Fuel - 5.3L or 6.2L - [Link target (target-id 342979-) not found]
P2240	Engine Controls and Fuel - 5.3L or 6.2L - [Link target (target-id 342979-) not found]
P2243	Engine Controls and Fuel - 5.3L or 6.2L - [Link target (target-id 342979-) not found]
P2247	Engine Controls and Fuel - 5.3L or 6.2L - [Link target (target-id 342979-) not found]
P2251	Engine Controls and Fuel - 5.3L or 6.2L - [Link target (target-id 342979-) not found]
P2254	Engine Controls and Fuel - 5.3L or 6.2L - [Link target (target-id 342979-) not found]
P2264	Engine Controls and Fuel - 3.0L Diesel - [Link target (target-id 312012-) not found]
P2269	Engine Controls and Fuel - 3.0L Diesel - [Link target (target-id 312012-) not found]
P226D	Engine Controls and Fuel - 3.0L Diesel - [Link target (target-id 307614-) not found]
P2270	Engine Controls and Fuel - 5.3L or 6.2L - [Link target (target-id 320403-) not found]
P2270	Engine Controls and Fuel - 5.3L or 6.2L - [Link target (target-id 299054-) not found]
P2271	Engine Controls and Fuel - 5.3L or 6.2L - [Link target (target-id 320403-) not found]
P2271	Engine Controls and Fuel - 5.3L or 6.2L - [Link target (target-id 299054-) not found]
P2272	Engine Controls and Fuel - 5.3L or 6.2L - [Link target (target-id 320403-) not found]
P2272	Engine Controls and Fuel - 5.3L or 6.2L - [Link target (target-id 299054-) not found]
P2273	Engine Controls and Fuel - 5.3L or 6.2L - [Link target (target-id 320403-) not found]
P2273	Engine Controls and Fuel - 5.3L or 6.2L - [Link target (target-id 299054-) not found]
P227B	Engine Controls and Fuel - 3.0L Diesel - [Link target (target-id 307326-) not found]
P227C	Engine Controls and Fuel - 3.0L Diesel - [Link target (target-id 307326-) not found]
P227C	Engine Controls and Fuel - 5.3L or 6.2L - [Link target (target-id 333002-) not found]
P227D	Engine Controls and Fuel - 3.0L Diesel - [Link target (target-id 307326-) not found]
P227D	Engine Controls and Fuel - 5.3L or 6.2L - [Link target (target-id 333002-) not found]
P227E	Engine Controls and Fuel - 3.0L Diesel - [Link target (target-id 307326-) not found]

DTC	Diagnostic Procedure
P227E	Engine Controls and Fuel - 5.3L or 6.2L - [Link target (target-id 333002-) not found]
P228A	Engine Controls and Fuel - 3.0L Diesel - [Link target (target-id 346946-) not found]
P228B	Engine Controls and Fuel - 3.0L Diesel - [Link target (target-id 346946-) not found]
P228C	Engine Controls and Fuel - 3.0L Diesel - [Link target (target-id 346946-) not found]
P228C	Engine Controls and Fuel - 5.3L or 6.2L - [Link target (target-id 297085-) not found]
P228D	Engine Controls and Fuel - 3.0L Diesel - [Link target (target-id 346946-) not found]
P228D	Engine Controls and Fuel - 5.3L or 6.2L - [Link target (target-id 297085-) not found]
P2293	Engine Controls and Fuel - 3.0L Diesel - [Link target (target-id 346946-) not found]
P2294	Engine Controls and Fuel - 3.0L Diesel - [Link target (target-id 325593-) not found]
P2295	Engine Controls and Fuel - 3.0L Diesel - [Link target (target-id 325593-) not found]
P2296	Engine Controls and Fuel - 3.0L Diesel - [Link target (target-id 325593-) not found]
P2297	Engine Controls and Fuel - 3.0L Diesel - [Link target (target-id 338020-) not found]
P229F	Engine Controls and Fuel - 3.0L Diesel - [Link target (target-id 350348-) not found]
P22A0	Engine Controls and Fuel - 3.0L Diesel - [Link target (target-id 350348-) not found]
P22A1	Engine Controls and Fuel - 3.0L Diesel - [Link target (target-id 350348-) not found]
P22A3	Engine Controls and Fuel - 3.0L Diesel - [Link target (target-id 350348-) not found]
P22A4	Engine Controls and Fuel - 3.0L Diesel - [Link target (target-id 350348-) not found]
P22A5	Engine Controls and Fuel - 3.0L Diesel - [Link target (target-id 350348-) not found]
P22A6	Engine Controls and Fuel - 3.0L Diesel - [Link target (target-id 350348-) not found]
P22A7	Engine Controls and Fuel - 3.0L Diesel - [Link target (target-id 350348-) not found]
P22A8	Engine Controls and Fuel - 3.0L Diesel - [Link target (target-id 350348-) not found]
P22A9	Engine Controls and Fuel - 3.0L Diesel - [Link target (target-id 350348-) not found]
P22B6	Engine Controls and Fuel - 3.0L Diesel - [Link target (target-id 350348-) not found]
P22B7	Engine Controls and Fuel - 3.0L Diesel - [Link target (target-id 350348-) not found]
P22FB	Engine Controls and Fuel - 3.0L Diesel - [Link target (target-id 338020-) not found]
P22FE	Engine Controls and Fuel - 3.0L Diesel - [Link target (target-id 350348-) not found]
P2300	Engine Controls and Fuel - 5.3L or 6.2L - [Link target (target-id 254362-) not found]
P2301	Engine Controls and Fuel - 5.3L or 6.2L - [Link target (target-id 254362-) not found]
P2303	Engine Controls and Fuel - 5.3L or 6.2L - [Link target (target-id 254362-) not found]
P2304	Engine Controls and Fuel - 5.3L or 6.2L - [Link target (target-id 254362-) not found]
P2306	Engine Controls and Fuel - 5.3L or 6.2L - [Link target (target-id 254362-) not found]
P2307	Engine Controls and Fuel - 5.3L or 6.2L - [Link target (target-id 254362-) not found]
P2309	Engine Controls and Fuel - 5.3L or 6.2L - [Link target (target-id 254362-) not found]
P2310	Engine Controls and Fuel - 5.3L or 6.2L - [Link target (target-id 254362-) not found]
P2312	Engine Controls and Fuel - 5.3L or 6.2L - [Link target (target-id 254362-) not found]
P2313	Engine Controls and Fuel - 5.3L or 6.2L - [Link target (target-id 254362-) not found]
P2315	Engine Controls and Fuel - 5.3L or 6.2L - [Link target (target-id 254362-) not found]
P2316	Engine Controls and Fuel - 5.3L or 6.2L - [Link target (target-id 254362-) not found]
P2318	Engine Controls and Fuel - 5.3L or 6.2L - [Link target (target-id 254362-) not found]
P2319	Engine Controls and Fuel - 5.3L or 6.2L - [Link target (target-id 254362-) not found]
P2321	Engine Controls and Fuel - 5.3L or 6.2L - [Link target (target-id 254362-) not found]
P2322	Engine Controls and Fuel - 5.3L or 6.2L - [Link target (target-id 254362-) not found]

DTC	Diagnostic Procedure
P233A	Engine Controls and Fuel - 3.0L Diesel - [Link target (target-id 325593-) not found]
P233B	Engine Controls and Fuel - 3.0L Diesel - [Link target (target-id 325593-) not found]
P233C	Engine Controls and Fuel - 3.0L Diesel - [Link target (target-id 325593-) not found]
P2381	Engine Controls and Fuel - 3.0L Diesel - [Link target (target-id 347038-) not found]
P2382	Engine Controls and Fuel - 3.0L Diesel - [Link target (target-id 347038-) not found]
P2383	Engine Controls and Fuel - 3.0L Diesel - [Link target (target-id 347038-) not found]
P2384	Engine Controls and Fuel - 3.0L Diesel - [Link target (target-id 347038-) not found]
P23AD	Engine Controls and Fuel - 3.0L Diesel - [Link target (target-id 350355-) not found]
P23AE	Engine Controls and Fuel - 3.0L Diesel - [Link target (target-id 350355-) not found]
P23AF	Engine Controls and Fuel - 3.0L Diesel - [Link target (target-id 350355-) not found]
P23B1	Engine Controls and Fuel - 3.0L Diesel - [Link target (target-id 350355-) not found]
P23B2	Engine Controls and Fuel - 3.0L Diesel - [Link target (target-id 350355-) not found]
P23B3	Engine Controls and Fuel - 3.0L Diesel - [Link target (target-id 350355-) not found]
P23B4	Engine Controls and Fuel - 3.0L Diesel - [Link target (target-id 350355-) not found]
P23B5	Engine Controls and Fuel - 3.0L Diesel - [Link target (target-id 350355-) not found]
P23B6	Engine Controls and Fuel - 3.0L Diesel - [Link target (target-id 350355-) not found]
P23B8	Engine Controls and Fuel - 3.0L Diesel - [Link target (target-id 350355-) not found]
P23B9	Engine Controls and Fuel - 3.0L Diesel - [Link target (target-id 350355-) not found]
P23C1	Engine Controls and Fuel - 3.0L Diesel - [Link target (target-id 350355-) not found]
P23C4	Engine Heating and Cooling - [Link target (target-id 351643-) not found]
P23C5	Engine Heating and Cooling - [Link target (target-id 351643-) not found]
P23C6	Engine Heating and Cooling - [Link target (target-id 351643-) not found]
P241F	Engine Controls and Fuel - 3.0L Diesel - [Link target (target-id 313867-) not found]
P242B	Engine Controls and Fuel - 3.0L Diesel - [Link target (target-id 347083-) not found]
P242C	Engine Controls and Fuel - 3.0L Diesel - [Link target (target-id 347083-) not found]
P242D	Engine Controls and Fuel - 3.0L Diesel - [Link target (target-id 347083-) not found]
P242E	Engine Controls and Fuel - 3.0L Diesel - [Link target (target-id 347083-) not found]
P244A	Engine Controls and Fuel - 3.0L Diesel - [Link target (target-id 307427-) not found]
P244B	Engine Controls and Fuel - 3.0L Diesel - [Link target (target-id 307427-) not found]
P2452	Engine Controls and Fuel - 3.0L Diesel - [Link target (target-id 347074-) not found]
P2453	Engine Controls and Fuel - 3.0L Diesel - [Link target (target-id 347074-) not found]
P2454	Engine Controls and Fuel - 3.0L Diesel - [Link target (target-id 347074-) not found]
P2455	Engine Controls and Fuel - 3.0L Diesel - [Link target (target-id 347074-) not found]
P2456	Engine Controls and Fuel - 3.0L Diesel - [Link target (target-id 347074-) not found]
P2459	Engine Controls and Fuel - 3.0L Diesel - [Link target (target-id 307772-) not found]
P2463	Engine Controls and Fuel - 3.0L Diesel - [Link target (target-id 307527-) not found]
P249C	Engine Controls and Fuel - 3.0L Diesel - [Link target (target-id 307677-) not found]
P249D	Engine Controls and Fuel - 3.0L Diesel - [Link target (target-id 307382-) not found]
P249E	Engine Controls and Fuel - 3.0L Diesel - [Link target (target-id 307382-) not found]
P24A0	Engine Controls and Fuel - 3.0L Diesel - [Link target (target-id 307577-) not found]
P24A1	Engine Controls and Fuel - 3.0L Diesel - [Link target (target-id 307577-) not found]
P24A4	Engine Controls and Fuel - 3.0L Diesel - [Link target (target-id 307717-) not found]

DTC	Diagnostic Procedure
P24AF	Engine Controls and Fuel - 3.0L Diesel - [Link target (target-id 350376-) not found]
P24B0	Engine Controls and Fuel - 3.0L Diesel - [Link target (target-id 350376-) not found]
P24B1	Engine Controls and Fuel - 3.0L Diesel - [Link target (target-id 350376-) not found]
P24B5	Engine Controls and Fuel - 3.0L Diesel - [Link target (target-id 350376-) not found]
P24B6	Engine Controls and Fuel - 3.0L Diesel - [Link target (target-id 350376-) not found]
P24C7	Engine Controls and Fuel - 3.0L Diesel - [Link target (target-id 350376-) not found]
P24C9	Engine Controls and Fuel - 3.0L Diesel - [Link target (target-id 350376-) not found]
P24D1	Engine Controls and Fuel - 3.0L Diesel - [Link target (target-id 350376-) not found]
P24DA	Engine Controls and Fuel - 3.0L Diesel - [Link target (target-id 350376-) not found]
P2534	Wiring Systems and Power Management - [Link target (target-id 221459-) not found]
P2535	Wiring Systems and Power Management - [Link target (target-id 221459-) not found]
P2544	Engine Controls and Fuel - 3.0L Diesel - [Link target (target-id 327050-) not found]
P2544	Engine Controls and Fuel - 5.3L or 6.2L - [Link target (target-id 316955-) not found]
P2561	Engine Controls and Fuel - 5.3L or 6.2L - [Link target (target-id 276019-) not found]
P2564	Engine Controls and Fuel - 3.0L Diesel - [Link target (target-id 314844-) not found]
P2565	Engine Controls and Fuel - 3.0L Diesel - [Link target (target-id 314844-) not found]
P257D	Vehicle Access - [Link target (target-id 208940-) not found]
P257E	Vehicle Access - [Link target (target-id 208940-) not found]
P257F	Vehicle Access - [Link target (target-id 208940-) not found]
P2599	Engine Controls and Fuel - 3.0L Diesel - [Link target (target-id 335071-) not found]
P25A2	Engine Controls and Fuel - 3.0L Diesel - [Link target (target-id 327564-) not found]
P25A2	Engine Controls and Fuel - 5.3L or 6.2L - [Link target (target-id 276019-) not found]
P25AF	Engine Controls and Fuel - 5.3L or 6.2L - [Link target (target-id 276019-) not found]
P25BD	Engine Controls and Fuel - 3.0L Diesel - [Link target (target-id 307311-) not found]
P25C6	Hydraulic Brakes - [Link target (target-id 272270-) not found]
P25C7	Hydraulic Brakes - [Link target (target-id 272270-) not found]
P25C9	Engine Controls and Fuel - 5.3L or 6.2L - [Link target (target-id 276019-) not found]
P2610	Engine Controls and Fuel - 3.0L Diesel - [Link target (target-id 323900-) not found]
P2610	Engine Controls and Fuel - 5.3L or 6.2L - [Link target (target-id 324290-) not found]
P261F	Engine Heating and Cooling - [Link target (target-id 330166-) not found]
P2626	Engine Controls and Fuel - 5.3L or 6.2L - [Link target (target-id 342979-) not found]
P2627	Engine Controls and Fuel - 3.0L Diesel - [Link target (target-id 338020-) not found]
P2628	Engine Controls and Fuel - 3.0L Diesel - [Link target (target-id 338020-) not found]
P2629	Engine Controls and Fuel - 5.3L or 6.2L - [Link target (target-id 342979-) not found]
P262B	Engine Controls and Fuel - 3.0L Diesel - [Link target (target-id 323900-) not found]
P262B	Engine Controls and Fuel - 5.3L or 6.2L - [Link target (target-id 324290-) not found]
P262B	Data Communications - [Link target (target-id 272300-) not found]
P262B	Driver Assistance Systems - [Link target (target-id 329011-) not found]
P264F	Engine Controls and Fuel - 3.0L Diesel - [Link target (target-id 323900-) not found]
P264F	Engine Controls and Fuel - 5.3L or 6.2L - [Link target (target-id 324290-) not found]
P2670	Automatic Transmission - 10L80 - [Link target (target-id 300999-) not found]
P2671	Automatic Transmission - 10L80 - [Link target (target-id 300999-) not found]

DTC	Diagnostic Procedure
P2687	Engine Controls and Fuel - 3.0L Diesel - [Link target (target-id 307443-) not found]
P2688	Engine Controls and Fuel - 3.0L Diesel - [Link target (target-id 307443-) not found]
P2689	Engine Controls and Fuel - 3.0L Diesel - [Link target (target-id 307443-) not found]
P268C	Engine Controls and Fuel - 3.0L Diesel - [Link target (target-id 309315-) not found]
P268D	Engine Controls and Fuel - 3.0L Diesel - [Link target (target-id 309315-) not found]
P268E	Engine Controls and Fuel - 3.0L Diesel - [Link target (target-id 309315-) not found]
P268F	Engine Controls and Fuel - 3.0L Diesel - [Link target (target-id 309315-) not found]
P2690	Engine Controls and Fuel - 3.0L Diesel - [Link target (target-id 309315-) not found]
P2691	Engine Controls and Fuel - 3.0L Diesel - [Link target (target-id 309315-) not found]
P26B7	Engine Heating and Cooling - [Link target (target-id 351643-) not found]
P26B8	Engine Heating and Cooling - [Link target (target-id 351643-) not found]
P26B9	Engine Heating and Cooling - [Link target (target-id 351643-) not found]
P26BB	Engine Heating and Cooling - [Link target (target-id 351643-) not found]
P26C0	Engine Heating and Cooling - [Link target (target-id 341330-) not found]
P26C2	Engine Heating and Cooling - [Link target (target-id 341330-) not found]
P26C8	Engine Controls and Fuel - 3.0L Diesel - [Link target (target-id 327564-) not found]
P26C8	Engine Controls and Fuel - 5.3L or 6.2L - [Link target (target-id 276019-) not found]
P26C9	Engine Controls and Fuel - 5.3L or 6.2L - [Link target (target-id 276019-) not found]
P26E4	Starting, Charging, and Low Voltage Energy Storage - [Link target (target-id 257465-) not found]
P26E5	Starting, Charging, and Low Voltage Energy Storage - [Link target (target-id 257465-) not found]
P26E6	Starting, Charging, and Low Voltage Energy Storage - [Link target (target-id 257465-) not found]
P2714	Automatic Transmission - 10L80 - [Link target (target-id 278308-) not found]
P2715	Automatic Transmission - 10L80 - [Link target (target-id 278308-) not found]
P2718	Automatic Transmission - 10L80 - [Link target (target-id 300999-) not found]
P2720	Automatic Transmission - 10L80 - [Link target (target-id 300999-) not found]
P2721	Automatic Transmission - 10L80 - [Link target (target-id 300999-) not found]
P2723	Automatic Transmission - 10L80 - [Link target (target-id 278310-) not found]
P2724	Automatic Transmission - 10L80 - [Link target (target-id 278310-) not found]
P2727	Automatic Transmission - 10L80 - [Link target (target-id 300999-) not found]
P2729	Automatic Transmission - 10L80 - [Link target (target-id 300999-) not found]
P2730	Automatic Transmission - 10L80 - [Link target (target-id 300999-) not found]
P2732	Automatic Transmission - 10L80 - [Link target (target-id 278312-) not found]
P2733	Automatic Transmission - 10L80 - [Link target (target-id 278312-) not found]
P2736	Automatic Transmission - 10L80 - [Link target (target-id 300999-) not found]
P2738	Automatic Transmission - 10L80 - [Link target (target-id 300999-) not found]
P2739	Automatic Transmission - 10L80 - [Link target (target-id 300999-) not found]
P2796	Automatic Transmission - 10L80 - [Link target (target-id 304109-) not found]
P2797	Automatic Transmission - 10L80 - [Link target (target-id 304109-) not found]
P2798	Automatic Transmission - 10L80 - [Link target (target-id 304109-) not found]
P2799	Automatic Transmission - 10L80 - [Link target (target-id 304109-) not found]
P279A	Transfer Case - MP 3015 - [Link target (target-id 328037-) not found]
P279A	Transfer Case - MP 3025 - [Link target (target-id 328038-) not found]

DTC	Diagnostic Procedure
P279B	Transfer Case - MP 3015 - [Link target (target-id 328037-) not found]
P279B	Transfer Case - MP 3025 - [Link target (target-id 328038-) not found]
P279C	Transfer Case - MP 3015 - [Link target (target-id 328037-) not found]
P279C	Transfer Case - MP 3025 - [Link target (target-id 328038-) not found]
P27A7	Automatic Transmission - 10L80 - [Link target (target-id 278314-) not found]
P27A8	Automatic Transmission - 10L80 - [Link target (target-id 278314-) not found]
P27A9	Automatic Transmission - 10L80 - [Link target (target-id 278314-) not found]
P27AA	Automatic Transmission - 10L80 - [Link target (target-id 278314-) not found]
P27AB	Automatic Transmission - 10L80 - [Link target (target-id 278314-) not found]
P27AC	Automatic Transmission - 10L80 - [Link target (target-id 278314-) not found]
P27AD	Automatic Transmission - 10L80 - [Link target (target-id 278314-) not found]
P27AE	Automatic Transmission - 10L80 - [Link target (target-id 278314-) not found]
P27B5	Engine Controls and Fuel - 3.0L Diesel - [Link target (target-id 323900-) not found]
P27B5	Engine Controls and Fuel - 5.3L or 6.2L - [Link target (target-id 324290-) not found]
P27EB	Automatic Transmission - 10L80 - [Link target (target-id 312083-) not found]
P27EC	Automatic Transmission - 10L80 - [Link target (target-id 316795-) not found]
P27ED	Automatic Transmission - 10L80 - [Link target (target-id 312083-) not found]
P27EE	Automatic Transmission - 10L80 - [Link target (target-id 312083-) not found]
P2812	Automatic Transmission - 10L80 - [Link target (target-id 300998-) not found]
P2814	Automatic Transmission - 10L80 - [Link target (target-id 300998-) not found]
P2815	Automatic Transmission - 10L80 - [Link target (target-id 300998-) not found]
P2817	Automatic Transmission - 10L80 - [Link target (target-id 284324-) not found]
P2818	Automatic Transmission - 10L80 - [Link target (target-id 284324-) not found]
P281B	Automatic Transmission - 10L80 - [Link target (target-id 300998-) not found]
P281D	Automatic Transmission - 10L80 - [Link target (target-id 300998-) not found]
P281E	Automatic Transmission - 10L80 - [Link target (target-id 300998-) not found]
P2820	Automatic Transmission - 10L80 - [Link target (target-id 304110-) not found]
P2821	Automatic Transmission - 10L80 - [Link target (target-id 304110-) not found]
P2824	Automatic Transmission - 10L80 - [Link target (target-id 300999-) not found]
P2826	Automatic Transmission - 10L80 - [Link target (target-id 300999-) not found]
P2827	Automatic Transmission - 10L80 - [Link target (target-id 300999-) not found]
P28F7	Engine Controls and Fuel - 3.0L Diesel - [Link target (target-id 315480-) not found]
P2956	Engine Controls and Fuel - 3.0L Diesel - [Link target (target-id 355467-) not found]
P2957	Engine Controls and Fuel - 3.0L Diesel - [Link target (target-id 347499-) not found]
P2958	Engine Controls and Fuel - 3.0L Diesel - [Link target (target-id 335071-) not found]
P295A	Engine Controls and Fuel - 3.0L Diesel - [Link target (target-id 335594-) not found]
P295C	Engine Controls and Fuel - 3.0L Diesel - [Link target (target-id 350352-) not found]
P29FA	Engine Heating and Cooling - [Link target (target-id 341330-) not found]
P29FB	Engine Heating and Cooling - [Link target (target-id 341330-) not found]
P2A00	Engine Controls and Fuel - 3.0L Diesel - [Link target (target-id 338020-) not found]
P2A01	Engine Controls and Fuel - 3.0L Diesel - [Link target (target-id 350348-) not found]
P2A02	Engine Controls and Fuel - 3.0L Diesel - [Link target (target-id 350355-) not found]

DTC	Diagnostic Procedure
P2AB0	Engine Controls and Fuel - 3.0L Diesel - [Link target (target-id 350376-) not found]
P2ADA	Engine Controls and Fuel - 3.0L Diesel - [Link target (target-id 350381-) not found]
P2ADB	Engine Controls and Fuel - 3.0L Diesel - [Link target (target-id 350381-) not found]
P2ADC	Engine Controls and Fuel - 3.0L Diesel - [Link target (target-id 350381-) not found]
P2ADD	Engine Controls and Fuel - 3.0L Diesel - [Link target (target-id 350381-) not found]
P2B00	Engine Controls and Fuel - 5.3L or 6.2L - [Link target (target-id 333138-) not found]
P2B01	Engine Controls and Fuel - 5.3L or 6.2L - [Link target (target-id 333138-) not found]
P2B02	Engine Controls and Fuel - 5.3L or 6.2L - [Link target (target-id 333138-) not found]
P2B03	Engine Controls and Fuel - 5.3L or 6.2L - [Link target (target-id 333138-) not found]
P2B04	Engine Controls and Fuel - 5.3L or 6.2L - [Link target (target-id 333138-) not found]
P2B05	Engine Controls and Fuel - 5.3L or 6.2L - [Link target (target-id 333138-) not found]
P2B06	Engine Controls and Fuel - 5.3L or 6.2L - [Link target (target-id 333138-) not found]
P2B07	Engine Controls and Fuel - 5.3L or 6.2L - [Link target (target-id 333138-) not found]
P2B08	Engine Controls and Fuel - 5.3L or 6.2L - [Link target (target-id 333138-) not found]
P2B09	Engine Controls and Fuel - 5.3L or 6.2L - [Link target (target-id 333138-) not found]
P2B0A	Engine Controls and Fuel - 5.3L or 6.2L - [Link target (target-id 333138-) not found]
P2B0B	Engine Controls and Fuel - 5.3L or 6.2L - [Link target (target-id 333138-) not found]
P2B0C	Engine Controls and Fuel - 5.3L or 6.2L - [Link target (target-id 333138-) not found]
P2B0D	Engine Controls and Fuel - 5.3L or 6.2L - [Link target (target-id 333138-) not found]
P2B0E	Engine Controls and Fuel - 5.3L or 6.2L - [Link target (target-id 333138-) not found]
P2B0F	Engine Controls and Fuel - 5.3L or 6.2L - [Link target (target-id 333138-) not found]
P2B58	Engine Heating and Cooling - [Link target (target-id 330897-) not found]
P2B59	Engine Heating and Cooling - [Link target (target-id 330897-) not found]
P2B5A	Engine Heating and Cooling - [Link target (target-id 330897-) not found]
P2B5B	Engine Heating and Cooling - [Link target (target-id 330897-) not found]
P2B5C	Engine Heating and Cooling - [Link target (target-id 330897-) not found]
P2B5E	Engine Heating and Cooling - [Link target (target-id 330902-) not found]
P2B5F	Engine Heating and Cooling - [Link target (target-id 330902-) not found]
P2B60	Engine Heating and Cooling - [Link target (target-id 350313-) not found]
P2B83	Engine Controls and Fuel - 3.0L Diesel - [Link target (target-id 328386-) not found]
P2B84	Engine Controls and Fuel - 3.0L Diesel - [Link target (target-id 328386-) not found]
P2B86	Engine Heating and Cooling - [Link target (target-id 330166-) not found]
P2B87	Engine Heating and Cooling - [Link target (target-id 330166-) not found]
P2B95	Engine Controls and Fuel - 5.3L or 6.2L - [Link target (target-id 333138-) not found]
P2B96	Engine Controls and Fuel - 5.3L or 6.2L - [Link target (target-id 333138-) not found]
P2B97	Engine Controls and Fuel - 3.0L Diesel - [Link target (target-id 350352-) not found]
P2B98	Engine Controls and Fuel - 3.0L Diesel - [Link target (target-id 347128-) not found]
P2B99	Engine Controls and Fuel - 3.0L Diesel - [Link target (target-id 347128-) not found]
P2B9A	Engine Controls and Fuel - 3.0L Diesel - [Link target (target-id 350381-) not found]
P2BAD	Engine Controls and Fuel - 3.0L Diesel - [Link target (target-id 307382-) not found]
P2C11	Engine Controls and Fuel - 3.0L Diesel - [Link target (target-id 313863-) not found]
P2C1E	Engine Controls and Fuel - 5.3L or 6.2L - [Link target (target-id 297085-) not found]

DTC	Diagnostic Procedure
P2C1F	Engine Controls and Fuel - 3.0L Diesel - [Link target (target-id 346946-) not found]
P2C1F	Engine Controls and Fuel - 5.3L or 6.2L - [Link target (target-id 297085-) not found]
P2C20	Engine Controls and Fuel - 3.0L Diesel - [Link target (target-id 346946-) not found]
P2C20	Engine Controls and Fuel - 5.3L or 6.2L - [Link target (target-id 297085-) not found]
P2C21	Displays and Gauges - [Link target (target-id 309840-) not found]
P2C63	Engine Controls and Fuel - 3.0L Diesel - [Link target (target-id 350355-) not found]
P2C64	Engine Controls and Fuel - 3.0L Diesel - [Link target (target-id 350355-) not found]
P2C65	Engine Controls and Fuel - 3.0L Diesel - [Link target (target-id 350355-) not found]
P2C7A	Engine Controls and Fuel - 3.0L Diesel - [Link target (target-id 349542-) not found]
P2CB9	Engine Heating and Cooling - [Link target (target-id 327034-) not found]
P2CB9	Engine Heating and Cooling - [Link target (target-id 327035-) not found]
P2CBB	Engine Heating and Cooling - [Link target (target-id 327034-) not found]
P2CE5	Engine Controls and Fuel - 3.0L Diesel - [Link target (target-id 347074-) not found]
P2CE6	Engine Controls and Fuel - 3.0L Diesel - [Link target (target-id 347074-) not found]
P2CE7	Engine Controls and Fuel - 3.0L Diesel - [Link target (target-id 347074-) not found]
P2CE8	Engine Controls and Fuel - 3.0L Diesel - [Link target (target-id 347074-) not found]
P2CE9	Engine Controls and Fuel - 3.0L Diesel - [Link target (target-id 347074-) not found]
P2D45	Engine Controls and Fuel - 3.0L Diesel - [Link target (target-id 327139-) not found]
P2DE7	Engine Heating and Cooling - [Link target (target-id 351643-) not found]
P2DE8	Engine Heating and Cooling - [Link target (target-id 341330-) not found]
P2E01	Electronic Transmission Range Select - [Link target (target-id 349898-) not found]
P2E05	Electronic Transmission Range Select - [Link target (target-id 349898-) not found]
P2E81	Engine Heating and Cooling - [Link target (target-id 341330-) not found]
P2EAD	Engine Controls and Fuel - 3.0L Diesel - [Link target (target-id 347079-) not found]
P305D	Starting, Charging, and Low Voltage Energy Storage - [Link target (target-id 272220-) not found]
P305E	Starting, Charging, and Low Voltage Energy Storage - [Link target (target-id 272220-) not found]
P3077	Engine Heating and Cooling - [Link target (target-id 330166-) not found]
P3078	Engine Heating and Cooling - [Link target (target-id 330166-) not found]
P30AE	Engine Controls and Fuel - 3.0L Diesel - [Link target (target-id 328386-) not found]
P30AF	Engine Controls and Fuel - 3.0L Diesel - [Link target (target-id 328386-) not found]
P30D4	Engine Controls and Fuel - 5.3L or 6.2L - [Link target (target-id 333138-) not found]
P30D6	Engine Controls and Fuel - 3.0L Diesel - [Link target (target-id 323900-) not found]
P30D6	Engine Controls and Fuel - 5.3L or 6.2L - [Link target (target-id 324290-) not found]
P30D6	Data Communications - [Link target (target-id 272300-) not found]
P30D6	Driver Assistance Systems - [Link target (target-id 329012-) not found]
P30D7	Engine Controls and Fuel - 3.0L Diesel - [Link target (target-id 323900-) not found]
P30D7	Engine Controls and Fuel - 5.3L or 6.2L - [Link target (target-id 324290-) not found]
P30D7	Data Communications - [Link target (target-id 272300-) not found]
P30D7	Driver Assistance Systems - [Link target (target-id 329012-) not found]
P30D8	Engine Controls and Fuel - 3.0L Diesel - [Link target (target-id 323900-) not found]
P30D8	Engine Controls and Fuel - 5.3L or 6.2L - [Link target (target-id 324290-) not found]
P30D8	Data Communications - [Link target (target-id 272300-) not found]

DTC	Diagnostic Procedure
P30D8	Driver Assistance Systems - [Link target (target-id 329012-) not found]
P30D9	Engine Controls and Fuel - 3.0L Diesel - [Link target (target-id 323900-) not found]
P30D9	Engine Controls and Fuel - 5.3L or 6.2L - [Link target (target-id 324290-) not found]
P30D9	Data Communications - [Link target (target-id 272300-) not found]
P30D9	Driver Assistance Systems - [Link target (target-id 329012-) not found]
P30DA	Engine Controls and Fuel - 3.0L Diesel - [Link target (target-id 323900-) not found]
P30DA	Engine Controls and Fuel - 5.3L or 6.2L - [Link target (target-id 324290-) not found]
P30DA	Data Communications - [Link target (target-id 272300-) not found]
P30DB	Engine Controls and Fuel - 3.0L Diesel - [Link target (target-id 323900-) not found]
P30DB	Engine Controls and Fuel - 5.3L or 6.2L - [Link target (target-id 324290-) not found]
P30DB	Data Communications - [Link target (target-id 272300-) not found]
P30DC	Engine Controls and Fuel - 3.0L Diesel - [Link target (target-id 323900-) not found]
P30DC	Engine Controls and Fuel - 5.3L or 6.2L - [Link target (target-id 324290-) not found]
P30DC	Data Communications - [Link target (target-id 272300-) not found]
P30DD	Engine Controls and Fuel - 3.0L Diesel - [Link target (target-id 323900-) not found]
P30DD	Engine Controls and Fuel - 5.3L or 6.2L - [Link target (target-id 324290-) not found]
P30DD	Data Communications - [Link target (target-id 272300-) not found]
P30DE	Engine Controls and Fuel - 3.0L Diesel - [Link target (target-id 327050-) not found]
P30DE	Engine Controls and Fuel - 5.3L or 6.2L - [Link target (target-id 316955-) not found]
P30EC	Antilock Brake System - [Link target (target-id 310827-) not found]
P30EE	Engine Heating and Cooling - [Link target (target-id 327034-) not found]
P30EE	Engine Heating and Cooling - [Link target (target-id 327035-) not found]
P30EF	Engine Heating and Cooling - [Link target (target-id 327034-) not found]
P30EF	Engine Heating and Cooling - [Link target (target-id 327035-) not found]
P30F0	Engine Heating and Cooling - [Link target (target-id 327034-) not found]
P30F0	Engine Heating and Cooling - [Link target (target-id 327035-) not found]
P30F1	Engine Heating and Cooling - [Link target (target-id 327034-) not found]
P30F1	Engine Heating and Cooling - [Link target (target-id 327035-) not found]
P30F2	Engine Heating and Cooling - [Link target (target-id 327034-) not found]
P30F3	Engine Heating and Cooling - [Link target (target-id 327034-) not found]
P3105	Engine Controls and Fuel - 5.3L or 6.2L - [Link target (target-id 304086-) not found]
P3106	Engine Controls and Fuel - 5.3L or 6.2L - [Link target (target-id 304086-) not found]
P3108	Engine Controls and Fuel - 5.3L or 6.2L - [Link target (target-id 304086-) not found]
P3109	Engine Controls and Fuel - 5.3L or 6.2L - [Link target (target-id 304086-) not found]
P310B	Engine Controls and Fuel - 5.3L or 6.2L - [Link target (target-id 304086-) not found]
P310C	Engine Controls and Fuel - 5.3L or 6.2L - [Link target (target-id 304086-) not found]
P310E	Engine Controls and Fuel - 5.3L or 6.2L - [Link target (target-id 304086-) not found]
P310F	Engine Controls and Fuel - 5.3L or 6.2L - [Link target (target-id 304086-) not found]
P3111	Engine Controls and Fuel - 5.3L or 6.2L - [Link target (target-id 304086-) not found]
P3112	Engine Controls and Fuel - 5.3L or 6.2L - [Link target (target-id 304086-) not found]
P3114	Engine Controls and Fuel - 5.3L or 6.2L - [Link target (target-id 304086-) not found]
P3115	Engine Controls and Fuel - 5.3L or 6.2L - [Link target (target-id 304086-) not found]

DTC	Diagnostic Procedure
P3117	Engine Controls and Fuel - 5.3L or 6.2L - [Link target (target-id 304086-) not found]
P3118	Engine Controls and Fuel - 5.3L or 6.2L - [Link target (target-id 304086-) not found]
P311A	Engine Controls and Fuel - 5.3L or 6.2L - [Link target (target-id 304086-) not found]
P311B	Engine Controls and Fuel - 5.3L or 6.2L - [Link target (target-id 304086-) not found]
P314E	Engine Controls and Fuel - 3.0L Diesel - [Link target (target-id 327050-) not found]
P314E	Engine Controls and Fuel - 5.3L or 6.2L - [Link target (target-id 316955-) not found]
P314F	Antilock Brake System - [Link target (target-id 309494-) not found]
P3186	Engine Controls and Fuel - 3.0L Diesel - [Link target (target-id 323900-) not found]
P3186	Engine Controls and Fuel - 5.3L or 6.2L - [Link target (target-id 324290-) not found]
P3186	Data Communications - [Link target (target-id 272300-) not found]
P3186	Driver Assistance Systems - [Link target (target-id 329013-) not found]
P3187	Engine Controls and Fuel - 3.0L Diesel - [Link target (target-id 327624-) not found]
P3187	Engine Controls and Fuel - 5.3L or 6.2L - [Link target (target-id 327505-) not found]
P3188	Engine Controls and Fuel - 3.0L Diesel - [Link target (target-id 327624-) not found]
P3188	Engine Controls and Fuel - 5.3L or 6.2L - [Link target (target-id 327505-) not found]
P3189	Engine Controls and Fuel - 5.3L or 6.2L - [Link target (target-id 304087-) not found]
P318A	Engine Controls and Fuel - 5.3L or 6.2L - [Link target (target-id 304087-) not found]
P318B	Engine Controls and Fuel - 5.3L or 6.2L - [Link target (target-id 304087-) not found]
P318C	Engine Controls and Fuel - 5.3L or 6.2L - [Link target (target-id 304087-) not found]
P318D	Engine Controls and Fuel - 5.3L or 6.2L - [Link target (target-id 304087-) not found]
P318E	Engine Controls and Fuel - 5.3L or 6.2L - [Link target (target-id 304087-) not found]
P318F	Engine Controls and Fuel - 5.3L or 6.2L - [Link target (target-id 304087-) not found]
P3190	Engine Controls and Fuel - 5.3L or 6.2L - [Link target (target-id 304087-) not found]
P3191	Engine Controls and Fuel - 3.0L Diesel - [Link target (target-id 323900-) not found]
P3191	Engine Controls and Fuel - 5.3L or 6.2L - [Link target (target-id 324290-) not found]
P3400	Engine Controls and Fuel - 5.3L or 6.2L - [Link target (target-id 304086-) not found]
P3401	Engine Controls and Fuel - 5.3L or 6.2L - [Link target (target-id 304086-) not found]
P3403	Engine Controls and Fuel - 5.3L or 6.2L - [Link target (target-id 304086-) not found]
P3404	Engine Controls and Fuel - 5.3L or 6.2L - [Link target (target-id 304086-) not found]
P3409	Engine Controls and Fuel - 5.3L or 6.2L - [Link target (target-id 304086-) not found]
P3411	Engine Controls and Fuel - 5.3L or 6.2L - [Link target (target-id 304086-) not found]
P3412	Engine Controls and Fuel - 5.3L or 6.2L - [Link target (target-id 304086-) not found]
P3417	Engine Controls and Fuel - 5.3L or 6.2L - [Link target (target-id 304086-) not found]
P3419	Engine Controls and Fuel - 5.3L or 6.2L - [Link target (target-id 304086-) not found]
P3420	Engine Controls and Fuel - 5.3L or 6.2L - [Link target (target-id 304086-) not found]
P3425	Engine Controls and Fuel - 5.3L or 6.2L - [Link target (target-id 304086-) not found]
P3427	Engine Controls and Fuel - 5.3L or 6.2L - [Link target (target-id 304086-) not found]
P3428	Engine Controls and Fuel - 5.3L or 6.2L - [Link target (target-id 304086-) not found]
P3433	Engine Controls and Fuel - 5.3L or 6.2L - [Link target (target-id 304086-) not found]
P3435	Engine Controls and Fuel - 5.3L or 6.2L - [Link target (target-id 304086-) not found]
P3436	Engine Controls and Fuel - 5.3L or 6.2L - [Link target (target-id 304086-) not found]
P3441	Engine Controls and Fuel - 5.3L or 6.2L - [Link target (target-id 304086-) not found]

DTC	Diagnostic Procedure
P3443	Engine Controls and Fuel - 5.3L or 6.2L - [Link target (target-id 304086-) not found]
P3444	Engine Controls and Fuel - 5.3L or 6.2L - [Link target (target-id 304086-) not found]
P3449	Engine Controls and Fuel - 5.3L or 6.2L - [Link target (target-id 304086-) not found]
P3451	Engine Controls and Fuel - 5.3L or 6.2L - [Link target (target-id 304086-) not found]
P3452	Engine Controls and Fuel - 5.3L or 6.2L - [Link target (target-id 304086-) not found]
P3457	Engine Controls and Fuel - 5.3L or 6.2L - [Link target (target-id 304086-) not found]
P3459	Engine Controls and Fuel - 5.3L or 6.2L - [Link target (target-id 304086-) not found]
P3460	Engine Controls and Fuel - 5.3L or 6.2L - [Link target (target-id 304086-) not found]
P3498	Engine Controls and Fuel - 5.3L or 6.2L - [Link target (target-id 304086-) not found]
P3499	Engine Controls and Fuel - 5.3L or 6.2L - [Link target (target-id 304086-) not found]
P349A	Engine Controls and Fuel - 5.3L or 6.2L - [Link target (target-id 304086-) not found]
P349B	Engine Controls and Fuel - 5.3L or 6.2L - [Link target (target-id 304086-) not found]
P349C	Engine Controls and Fuel - 5.3L or 6.2L - [Link target (target-id 304086-) not found]
P349D	Engine Controls and Fuel - 5.3L or 6.2L - [Link target (target-id 304086-) not found]
P349E	Engine Controls and Fuel - 5.3L or 6.2L - [Link target (target-id 304086-) not found]
P349F	Engine Controls and Fuel - 5.3L or 6.2L - [Link target (target-id 304086-) not found]
U0073	Data Communications - [Link target (target-id 148027-) not found]
U0074	Data Communications - [Link target (target-id 168614-) not found]
U0075	Data Communications - [Link target (target-id 219671-) not found]
U0076	Data Communications - [Link target (target-id 225597-) not found]
U0078	Data Communications - [Link target (target-id 208739-) not found]
U0079	Data Communications - [Link target (target-id 313798-) not found]
U007B	Data Communications - [Link target (target-id 274046-) not found]
U007E	Data Communications - [Link target (target-id 277590-) not found]
U0100-U02FF	Data Communications - [Link target (target-id 148031-) not found]
U0125	Data Communications - [Link target (target-id 284672-) not found]
U0168	Data Communications - [Link target (target-id 284680-) not found]
U0212	Data Communications - [Link target (target-id 329087-) not found]
U029D	Engine Controls and Fuel - 3.0L Diesel - [Link target (target-id 327907-) not found]
U029E	Engine Controls and Fuel - 3.0L Diesel - [Link target (target-id 327907-) not found]
U02A1	Engine Controls and Fuel - 3.0L Diesel - [Link target (target-id 327907-) not found]
U02A3	Engine Controls and Fuel - 3.0L Diesel - [Link target (target-id 327907-) not found]
U02A9	Engine Controls and Fuel - 3.0L Diesel - [Link target (target-id 328386-) not found]
U02B3	Driver Assistance Systems - [Link target (target-id 361817-) not found]
U03C1	Engine Controls and Fuel - 3.0L Diesel - [Link target (target-id 362333-) not found]
U0400-U05FF	Data Communications - [Link target (target-id 179843-) not found]
U04A4	Engine Controls and Fuel - 3.0L Diesel - [Link target (target-id 350376-) not found]
U059E	Engine Controls and Fuel - 3.0L Diesel - [Link target (target-id 338020-) not found]
U059F	Engine Controls and Fuel - 3.0L Diesel - [Link target (target-id 350348-) not found]
U05A8	Engine Controls and Fuel - 3.0L Diesel - [Link target (target-id 350355-) not found]
U05AA	Engine Controls and Fuel - 3.0L Diesel - [Link target (target-id 328386-) not found]
U05B4	Driver Assistance Systems - [Link target (target-id 361818-) not found]

DTC	Diagnostic Procedure
U0600-U06FF	Data Communications - [Link target (target-id 276055-) not found]
U0601	Engine Controls and Fuel - 3.0L Diesel - [Link target (target-id 347074-) not found]
U0606	Engine Controls and Fuel - 5.3L or 6.2L - [Link target (target-id 332809-) not found]
U0607	Engine Controls and Fuel - 5.3L or 6.2L - [Link target (target-id 332809-) not found]
U060F	Engine Controls and Fuel - 3.0L Diesel - [Link target (target-id 362333-) not found]
U060F	Engine Controls and Fuel - 5.3L or 6.2L - [Link target (target-id 323319-) not found]
U0617	Engine Heating and Cooling - [Link target (target-id 351643-) not found]
U0618	Engine Heating and Cooling - [Link target (target-id 341330-) not found]
U061F	Engine Controls and Fuel - 3.0L Diesel - [Link target (target-id 347083-) not found]
U0620	Engine Controls and Fuel - 3.0L Diesel - [Link target (target-id 347083-) not found]
U0623	Engine Heating and Cooling - [Link target (target-id 330166-) not found]
U0625	Engine Controls and Fuel - 5.3L or 6.2L - [Link target (target-id 324301-) not found]
U0632	Engine Heating and Cooling - [Link target (target-id 327034-) not found]
U0632	Engine Heating and Cooling - [Link target (target-id 327035-) not found]
U0633	Engine Heating and Cooling - [Link target (target-id 327034-) not found]
U0633	Engine Heating and Cooling - [Link target (target-id 327035-) not found]
U063F	Engine Heating and Cooling - [Link target (target-id 330902-) not found]
U064F	Engine Controls and Fuel - 3.0L Diesel - [Link target (target-id 313022-) not found]
U0650	Engine Controls and Fuel - 3.0L Diesel - [Link target (target-id 313844-) not found]
U0651	Engine Controls and Fuel - 3.0L Diesel - [Link target (target-id 347034-) not found]
U0653	Engine Controls and Fuel - 3.0L Diesel - [Link target (target-id 347034-) not found]
U0654	Engine Controls and Fuel - 3.0L Diesel - [Link target (target-id 313014-) not found]
U0656	Engine Controls and Fuel - 3.0L Diesel - [Link target (target-id 314844-) not found]
U0669	Engine Controls and Fuel - 3.0L Diesel - [Link target (target-id 347038-) not found]
U0670	Engine Controls and Fuel - 5.3L or 6.2L - [Link target (target-id 324301-) not found]
U0671	Engine Controls and Fuel - 5.3L or 6.2L - [Link target (target-id 324301-) not found]
U067C	Engine Heating and Cooling - [Link target (target-id 327034-) not found]
U068E	Engine Controls and Fuel - 3.0L Diesel - [Link target (target-id 347570-) not found]
U0696	Engine Controls and Fuel - 3.0L Diesel - [Link target (target-id 347074-) not found]
U069A	Engine Controls and Fuel - 3.0L Diesel - [Link target (target-id 347083-) not found]
U06B4	Engine Controls and Fuel - 3.0L Diesel - [Link target (target-id 359322-) not found]
U06B6	Engine Controls and Fuel - 3.0L Diesel - [Link target (target-id 359322-) not found]
U101A	Data Communications - [Link target (target-id 317051-) not found]
U101B	Engine Controls and Fuel - 5.3L or 6.2L - [Link target (target-id 324301-) not found]
U101F	Data Communications - [Link target (target-id 359629-) not found]
U1109	Data Communications - [Link target (target-id 329043-) not found]
U110A	Data Communications - [Link target (target-id 329044-) not found]
U110B	Data Communications - [Link target (target-id 329045-) not found]
U111B	Data Communications - [Link target (target-id 329051-) not found]
U1121	Data Communications - [Link target (target-id 329054-) not found]
U1122	Data Communications - [Link target (target-id 329055-) not found]
U1126	Data Communications - [Link target (target-id 329058-) not found]

DTC	Diagnostic Procedure
U1127	Data Communications - [Link target (target-id 301016-) not found]
U112D	Data Communications - [Link target (target-id 329059-) not found]
U112F	Data Communications - [Link target (target-id 329060-) not found]
U1132	Data Communications - [Link target (target-id 329063-) not found]
U1134	Data Communications - [Link target (target-id 329065-) not found]
U1135	Data Communications - [Link target (target-id 329066-) not found]
U1136	Data Communications - [Link target (target-id 329067-) not found]
U1137	Data Communications - [Link target (target-id 329068-) not found]
U1138	Data Communications - [Link target (target-id 329069-) not found]
U113B	Data Communications - [Link target (target-id 329070-) not found]
U1144	Data Communications - [Link target (target-id 329072-) not found]
U1147	Data Communications - [Link target (target-id 321237-) not found]
U1150	Data Communications - [Link target (target-id 329077-) not found]
U1151	Data Communications - [Link target (target-id 329078-) not found]
U1155	Data Communications - [Link target (target-id 332900-) not found]
U118B	Data Communications - [Link target (target-id 345194-) not found]
U1191	Electronic Transmission Range Select - [Link target (target-id 350236-) not found]
U1194	Electronic Transmission Range Select - [Link target (target-id 350237-) not found]
U1195	Electronic Transmission Range Select - [Link target (target-id 350236-) not found]
U1196	Electronic Transmission Range Select - [Link target (target-id 350237-) not found]
U119C	Data Communications - [Link target (target-id 335093-) not found]
U11FD	Data Communications - [Link target (target-id 349284-) not found]
U11FE	Data Communications - [Link target (target-id 348841-) not found]
U1300-U1344	Data Communications - [Link target (target-id 317053-) not found]
U1314	Engine Heating and Cooling - [Link target (target-id 327035-) not found]
U1314-U1316	Engine Heating and Cooling - [Link target (target-id 327034-) not found]
U1315	Engine Heating and Cooling - [Link target (target-id 327035-) not found]
U1319	Engine Controls and Fuel - 5.3L or 6.2L - [Link target (target-id 323319-) not found]
U1345-U1349	Data Communications - [Link target (target-id 317756-) not found]
U134A-U14FF	Data Communications - [Link target (target-id 317053-) not found]
U1379	Engine Heating and Cooling - [Link target (target-id 341330-) not found]
U137E	Engine Heating and Cooling - [Link target (target-id 330166-) not found]
U13E0	Electronic Transmission Range Select - [Link target (target-id 350236-) not found]
U13E1	Electronic Transmission Range Select - [Link target (target-id 350237-) not found]
U13E2	Electronic Transmission Range Select - [Link target (target-id 350236-) not found]
U13E3	Electronic Transmission Range Select - [Link target (target-id 350237-) not found]
U1500-U15FF	Data Communications - [Link target (target-id 179844-) not found]
U153A	Data Communications - [Link target (target-id 349823-) not found]
U1600	Data Communications - [Link target (target-id 195726-) not found]
U1602	Data Communications - [Link target (target-id 328899-) not found]
U1603	Data Communications - [Link target (target-id 328900-) not found]
U1604	Data Communications - [Link target (target-id 317757-) not found]

DTC	Diagnostic Procedure
U1605	Data Communications - [Link target (target-id 317758-) not found]
U1607	Data Communications - [Link target (target-id 328512-) not found]
U1608	Data Communications - [Link target (target-id 328513-) not found]
U1609	Data Communications - [Link target (target-id 328514-) not found]
U160A	Data Communications - [Link target (target-id 328515-) not found]
U160B	Data Communications - [Link target (target-id 328516-) not found]
U1610	Data Communications - [Link target (target-id 328519-) not found]
U1611	Data Communications - [Link target (target-id 319395-) not found]
U1615	Data Communications - [Link target (target-id 328522-) not found]
U1616	Data Communications - [Link target (target-id 328523-) not found]
U1623	Data Communications - [Link target (target-id 328524-) not found]
U1624	Data Communications - [Link target (target-id 328525-) not found]
U1625	Data Communications - [Link target (target-id 328526-) not found]
U1627	Data Communications - [Link target (target-id 332914-) not found]
U1639	Data Communications - [Link target (target-id 332925-) not found]
U163D	Data Communications - [Link target (target-id 332929-) not found]
U1642	Data Communications - [Link target (target-id 335270-) not found]
U1643	Data Communications - [Link target (target-id 332932-) not found]
U1647	Data Communications - [Link target (target-id 332933-) not found]
U164A	Data Communications - [Link target (target-id 332934-) not found]
U164B	Data Communications - [Link target (target-id 335271-) not found]
U164E	Data Communications - [Link target (target-id 332935-) not found]
U164F	Data Communications - [Link target (target-id 332936-) not found]
U1651	Data Communications - [Link target (target-id 184702-) not found]
U166A	Data Communications - [Link target (target-id 332946-) not found]
U166B	Data Communications - [Link target (target-id 347246-) not found]
U1670	Data Communications - [Link target (target-id 349294-) not found]
U1818	Data Communications - [Link target (target-id 168622-) not found]
U18A2	Data Communications - [Link target (target-id 225598-) not found]
U18E2	Data Communications - [Link target (target-id 317760-) not found]
U1960	Driver Assistance Systems - [Link target (target-id 329015-) not found]
U1960-U1962	Data Communications - [Link target (target-id 315363-) not found]
U1961	Driver Assistance Systems - [Link target (target-id 329015-) not found]
U1967	Cellular, Entertainment, and Navigation - [Link target (target-id 319002-) not found]
U196E	Cellular, Entertainment, and Navigation - [Link target (target-id 319003-) not found]
U1973	Displays and Gauges - [Link target (target-id 309457-) not found]
U1977	Data Communications - [Link target (target-id 317061-) not found]
U1978	Data Communications - [Link target (target-id 317062-) not found]
U197A	Data Communications - [Link target (target-id 317064-) not found]
U197E	Displays and Gauges - [Link target (target-id 317153-) not found]
U197F	Displays and Gauges - [Link target (target-id 317154-) not found]
U198B	Data Communications - [Link target (target-id 349296-) not found]

DTC	Diagnostic Procedure
U2000-U20FF	Data Communications - [Link target (target-id 317070-) not found]
U2110-U2117	Data Communications - [Link target (target-id 317071-) not found]
U2211	Data Communications - [Link target (target-id 328630-) not found]
U2212	Data Communications - [Link target (target-id 328631-) not found]
U2213	Data Communications - [Link target (target-id 328632-) not found]
U223B	Displays and Gauges - [Link target (target-id 348392-) not found]
U2241	Data Communications - [Link target (target-id 349313-) not found]
U2627	Engine Controls and Fuel - 3.0L Diesel - [Link target (target-id 350381-) not found]
U2628	Engine Controls and Fuel - 3.0L Diesel - [Link target (target-id 350381-) not found]
U2630	Engine Controls and Fuel - 3.0L Diesel - [Link target (target-id 350381-) not found]
U2A90	Displays and Gauges - [Link target (target-id 322010-) not found]
U2A91	Displays and Gauges - [Link target (target-id 322011-) not found]
U2C91	Data Communications - [Link target (target-id 349297-) not found]
U3000	Rear Drive Axle - [Link target (target-id 333521-) not found]
U3000	Data Communications - [Link target (target-id 229188-) not found]
U3000	Driver Assistance Systems - [Link target (target-id 317614-) not found]
U3000	Driver Monitoring and Occupant Detection - [Link target (target-id 354524-) not found]
U3000	Parking Assistance Systems - [Link target (target-id 320659-) not found]
U3000	Supplemental Restraints - [Link target (target-id 321864-) not found]
U3000	Power Seats - [Link target (target-id 352062-) not found]
U3000	Power Steering - [Link target (target-id 317740-) not found]
U3001	Data Communications - [Link target (target-id 280673-) not found]
U3002	Antilock Brake System - [Link target (target-id 309495-) not found]
U3002	Data Communications - [Link target (target-id 280674-) not found]
U3002	Driver Assistance Systems - [Link target (target-id 329016-) not found]
U3003	Starting, Charging, and Low Voltage Energy Storage - [Link target (target-id 205272-) not found]
U3006-U3009	Starting, Charging, and Low Voltage Energy Storage - [Link target (target-id 311937-) not found]
U300D	Wiring Systems and Power Management - [Link target (target-id 319488-) not found]
U3018	Starting, Charging, and Low Voltage Energy Storage - [Link target (target-id 297157-) not found]
U3019	Starting, Charging, and Low Voltage Energy Storage - [Link target (target-id 297157-) not found]
U3023	Starting, Charging, and Low Voltage Energy Storage - [Link target (target-id 327359-) not found]
U3034	Data Communications - [Link target (target-id 315363-) not found]
U3035	Data Communications - [Link target (target-id 315363-) not found]
U3501-U3588	Starting, Charging, and Low Voltage Energy Storage - [Link target (target-id 297157-) not found]
U35B9	Data Communications - [Link target (target-id 332964-) not found]

Symptom Byte List

Symptom Byte List

Symptom Byte	Symptom Byte Description	Symptom Byte Definition
00	No Sub Type Information	This sub type is used for failures where the base DTC text string provides the complete description of the failure itself.
01	General Electrical Failure	This sub type is used for General Electrical Failures that cannot be assigned to a specific sub type.

Symptom Byte	Symptom Byte Description	Symptom Byte Definition
02	General Signal Failure	This sub type is used for General Signal Failures that cannot be assigned to a specific sub type.
03	FM (Frequency Modulated) / PWM (Pulse Width Modulated) Failure	This sub type is used for FM / PWM Failures that cannot be assigned to a specific sub type.
04	System Internal Failure	This sub type is used for control module Internal Failures that cannot be assigned to a specific sub type.
05	System Programming Failure	This sub type is used for System Programming Failures that cannot be assigned to a specific sub type.
06	Algorithm Based Failure	This sub type is used for Algorithm Based Failures that cannot be assigned to a specific sub type.
07	Mechanical Failure	This sub type is used for Mechanical Failures that cannot be assigned to a specific sub type.
08	Bus Signal / Message Failure	This sub type is used for Bus Signal / Message Failures that cannot be assigned to a specific sub type.
09	Component Failure	This sub type is used for Component Failures that cannot be assigned to a specific sub type.
0A	General Electric Failures — 2	This range specifies the standard wiring failure modes (i.e., shorts and opens), and direct current (DC) quantities related by Ohm's Law.
0B	Reserved	—
0C	Reserved	—
0D	Reserved	—
0E	Reserved	—
0F	Reserved	—
10	Reserved	—
11	Circuit Short To Ground	This sub type is used for failures where the control module measures ground (battery negative) potential for greater than a specified time period or when some other value less than the low voltage limit DTC Sub Type is measured.
12	Circuit Short To Battery	This sub type is used for failures, where the control module measures vehicle system (battery positive) potential for greater than a specified time period or when some other value higher than the high voltage limit DTC Sub Type is measured.
13	Circuit Open	This sub type is used for failures, where the control module determines an open circuit via lack of bias voltage, low current flow, no change in the state of an input in response to an output, etc.
14	Circuit Short To Ground or Open	This sub type is used for failures, where the condition detected by the control module is the same for either indicated failure mode.
15	Circuit Short To Battery or Open	This sub type is used for failures, where the condition detected by the control module is the same for either indicated failure mode.
16	Circuit Voltage Below Threshold	This sub type is used for failures, where the control module measures a voltage below a specified range.
17	Circuit Voltage Above Threshold	This sub type is used for failures, where the control module measures a voltage above a specified range.
18	Circuit Current Below Threshold	This sub type is used for failures, where the control module measures current flow below a specified range.
19	Circuit Current Above Threshold	This sub type is used for failures, where the control module measures current flow above a specified range.
1A	Circuit Resistance Below Threshold	This sub type is used for failures, where the control module infers a circuit resistance below a specified range.

Symptom Byte	Symptom Byte Description	Symptom Byte Definition
1B	Circuit Resistance Above Threshold	This sub type is used for failures, where the control module infers a circuit resistance above a specified range.
1C	Circuit Voltage Out of Range	This sub type is used for failures, where the control module measures a voltage outside the expected range but not identified as too high or too low.
1D	Circuit Current Out of Range	This sub type is used for failures, where the control module measures a current outside the expected range but not identified as too high or too low.
1E	Circuit Resistance Out of Range	This sub type is used for failures, where the control module measures a resistance outside the expected range but not identified as too high or too low.
1F	Circuit Intermittent	This sub type is used for failures, where the control module momentarily detects one of the conditions defined above, but not long enough to set a specific sub type.
20	Reserved	—
21	Signal Amplitude < Minimum	This sub type is used for failures where the control module measures a signal voltage amplitude below a specified range (e.g., low gain).
22	Signal Amplitude > Maximum	This sub type is used for failures where the control module measures a signal voltage amplitude above a specified range (e.g., gain too high).
23	Signal Stuck Low	This sub type is used for failures where the control module measures a signal that remains low when transitions are expected.
24	Signal Stuck High	This sub type is used for failures where the control module measures a signal that remains high when transitions are expected.
25	Signal Shape / Waveform Failure	This sub type is used for failures where the shape of the signal (plot of the amplitude with respect to time) is not correct, e.g., improper circuit impedance.
26	Signal Rate of Change Below Threshold	This sub type is used for failures where the signal transitions more slowly than the specified limit.
27	Signal Rate of Change Above Threshold	This sub type is used for failures where the signal transitions more quickly than the specified limit.
28	Signal Bias Level Out of Range / Zero Adjustment Failure	This sub type is used for failures where the control module applies a bias voltage or a zero signal level to a circuit upon which is superimposed a signal voltage (e.g., bias voltage to an Oxygen Sensor circuit, or a filtered digital m/sec2 signal while vehicle stands still for a lateral accelerator sensor module.)
29	Signal Invalid	This sub type is used for failures where the value of the signal is not plausible given the operating conditions.
2A	Signal Stuck In Range	This sub type is used for failures where the value of the signal is in the normal operating range, but not correct for current operating conditions.
2B	Signal Cross Coupled	This sub type is used when a signal is found to be incorrectly correlated to another signal that the control module is also monitoring, indicating that the signals are shorted together
2C	Reserved	—
2D	Reserved	—
2E	Reserved	—
2F	Signal Erratic	This sub type is used for failures where the signal is momentarily implausible (not long enough for "signal invalid") or discontinuous.
30	Reserved	—

Symptom Byte	Symptom Byte Description	Symptom Byte Definition
31	No Signal	This sub type is used for failures where the control module does not detect a signal which ought to be present (e.g., wheel speed signals present for three of the four wheels and brakes not applied.)
32	Signal Low Time < Minimum	This sub type is used for failures where the control module detects the low pulse is too narrow with respect to time.
33	Signal Low Time > Maximum	This sub type is used for failures where the control module detects the low pulse is too wide with respect to time.
34	Signal High Time < Minimum	This sub type is used for failures where the control module detects the high pulse is too narrow with respect to time.
35	Signal High Time > Maximum	This sub type is used for failures where the control module detects the high pulse is too wide with respect to time.
36	Signal Frequency Too Low	This sub type is used for failures where the control module detects excessive duration for one cycle of the output across a specified sample size.
37	Signal Frequency Too High	This sub type is used for failures where the control module detects insufficient duration for one cycle of the output across a specified sample size.
38	Signal Frequency Incorrect	This sub type is used for failures where the control module measures an incorrect number of cycles in a given time period.
39	Signal Has Too Few Pulses	This sub type is used for failures where the control module measures too few pulses (e.g., position is calibrated in counts from one extreme to the other).
3A	Signal Has Too Many Pulses	This sub type is used for failures where the control module measures too many pulses (e.g., position is calibrated in counts from one extreme to the other).
3B	Reserved	—
3C	Reserved	—
3D	Reserved	—
3E	Reserved	—
3F	Reserved	—
40	Reserved	—
41	General Checksum Failure	This sub type is used by the control module to indicate an incorrect checksum calculation where memory type is not specified.
42	General Memory Failure	This sub type is used by the control module to indicate a memory failure where memory type is not specified.
43	Special Memory Failure	This sub type is used by the control module to indicate a memory failure where the specific memory type is not defined in this category.
44	Data Memory Failure	This sub type is used by the control module to indicate a data (or working) memory failure for embedded systems using FLASH memory. This is equivalent to RAM in RAM/ROM/EEPROM embedded systems.
45	Program Memory Failure	This sub type is used by the control module to indicate a program memory failure for embedded systems using FLASH memory. This is equivalent to ROM in RAM/ROM/EEPROM embedded systems.
46	Calibration / Parameter Memory Failure	This sub type is used by the control module to indicate a calibration / parameter memory failure for embedded systems using FLASH memory. This is equivalent to EEPROM in RAM/ROM/EEPROM embedded systems.
47	Watchdog / Safety µC Failure	This sub type is used by the control module to indicate a watchdog / safety µC failure, or a failure in the execution of operational software.

Symptom Byte	Symptom Byte Description	Symptom Byte Definition
48	Supervision Software Failure	This sub type is used by the control module to indicate a supervision software failure.
49	Internal Electronic Failure	This sub type is used by the control module to indicate the detection of an internal circuit failure.
4A	Incorrect Component Installed	This sub type is used by the control module to indicate a mismatch between the hardware connected to the control module and the hardware expected by the control module.
4B	Over Temperature	This sub type is used by the control module to indicate the detection of an internal temperature above the expected range.
4C	Reserved	—
4D	Reserved	—
4E	Reserved	—
4F	Reserved	—
50	Reserved	—
51	Not Programmed	This sub type is used by the control module to indicate that programming is required.
52	Not Activated	This sub type is used by the control module to indicate that some portion of the program has not been enabled.
53	Deactivated	This sub type is used by the control module to indicate that that some portion of the program has been disabled.
54	Missing Setup/Learn	This sub type is used by the control module to indicate that an operational range, etc., for a sensor or actuator must be taught to the control module, e.g. by programming or learning.
55	Not Configured	This sub type is used by the control module to indicate the need to enter (program) the sub system option content or the vehicle option content.
56	Invalid / Incompatible Configuration	This sub type indicates a control module or system configuration that cannot be valid, e.g. to have mutually exclusive options set on at the same time, or a set up that is not supported by the currently installed hardware/software.
57	Invalid / Incompatible Software Component	This sub type is used by the control module to indicate that a software component (calibration or program) has been identified as invalid for the control module or incompatible with other hardware or software identified by the control module, e.g. a downloaded calibration software component is incompatible with a permanent or downloaded strategy software component.
58	Reserved	—
59	Reserved	—
5A	Reserved	—
5B	Reserved	—
5C	Reserved	—
5D	Reserved	—
5E	Reserved	—
5F	Reserved	—
60	Reserved	—
61	Signal Calculation Failure	This sub type is used for algorithm based calculation failures where the calculated value is outside the expected range.
62	Signal Compare Failure	This sub type is used for failures where the control module compares two or more input parameters for plausibility but cannot specifically identify the component that is faulted.
63	Circuit / Component Protection Time-Out	This sub type is used for failures where the control module detects a function is active for greater than a specified time period.

Symptom Byte	Symptom Byte Description	Symptom Byte Definition
64	Signal Plausibility Failure	This sub type is used for failures where the control module detects a single input parameter is operating outside the plausible range.
65	Signal Has Too Few Transitions / Events	This sub type is used for failures where the control module monitors a parameter over time within specified limits and detects fewer than the expected number of transitions.
66	Signal Has Too Many Transitions / Events	This sub type is used for failures where the control module monitors a parameter over time within specified limits and detects more than the expected number of transitions.
67	Signal Incorrect After Event	This sub type is used for failures where the control module does not see the correct change of a parameter or group of parameters in response to a particular event.
68	Event Information	This sub type is used by the control module to indicate the detection of a system event that was not caused by the control module itself but forces the control module to store a DTC (e.g. missing functionality from another system/control module).
69	Reserved	—
6A	Reserved	—
6B	Reserved	—
6C	Reserved	—
6D	Reserved	—
6E	Reserved	—
6F	Reserved	—
70	Reserved	—
71	Actuator Stuck	This sub type is used for failures where the control module does not detect any mechanical motion in response to energizing a motor, solenoid, relay, etc.
72	Actuator Stuck Open	This sub type is used for failures where the control module does not detect any mechanical motion upon commanding the operation of a motor, solenoid, relay, etc., to close some piece of equipment.
73	Actuator Stuck Closed	This sub type is used for failures where the control module does not detect any mechanical motion upon commanding the operation of a motor, solenoid, relay, etc., to open some piece of equipment.
74	Actuator Slipping	This sub type is used for failures where the control module detects excessive duration to command a motor, solenoid, relay, etc., to move a piece of equipment to a desired position.
75	Emergency Position Not Reachable	This sub type is used for failures where the control module is unable to command a motor, solenoid, relay, etc., to move a piece of equipment to the emergency position.
76	Wrong Mounting Position	This sub type is used for failures where the control module detects incorrectly mounted components, e.g., acceleration sensor showing a position error of 90°.
77	Commanded Position Not Reachable	This sub type is used for failures where the control module is unable to command a motor, solenoid, relay, etc., to move a piece of equipment to the commanded position either due to a failure in the actuator or its mechanical environment.
78	Alignment or Adjustment Incorrect	This sub type is used for failures where the control module detects incorrectly adjusted or aligned components.
79	Mechanical Linkage Failure	This sub type is used for failures where the control module detects that the actuator is operational but the driven device is not operating, e.g., drive cable for power sliding door broken.
7A	Fluid Leak or Seal Failure	This sub type is used for failures where the control module detects that a mechanical component has an unexpected gas or liquid flow in, out, or through the component.

Symptom Byte	Symptom Byte Description	Symptom Byte Definition
7B	Low Fluid Level	This sub type is used for failures where the control module detects that a fluid level is too low for proper operation of the system.
7C	Slow Response	This sub type is used where control module has detected a response that is longer than expected or a degraded rate of change in the monitored component or system.
7D	Reserved	—
7E	Actuator Stuck On	This sub type is used for failures where the control module detects the actuator mechanical function is fixed in the ON / applied state
7F	Actuator Stuck Off	This sub type is used for failures where the control module detects the actuator mechanical function is fixed in the OFF / Released state.
80	Reserved	—
81	Invalid Serial Data Received	This sub type is used by the control module to indicate a signal was received with the corresponding validity bit equal to "invalid" or post processing of the signal determines it is invalid.
82	Alive / Sequence Counter Incorrect / Not Updated	This sub type is used by the control module to indicate that a signal was received without the corresponding rolling count value being properly updated.
83	Value of Signal Protection Calculation Incorrect	This sub type is used by the control module to indicate, that a message was processed with an incorrect protection (checksum) calculation.
84	Signal Below Allowable Range	This sub type is used for failures where some circuit quantity, reported via serial data, is below a specified range.
85	Signal Above Allowable Range	This sub type is used for failures where some circuit quantity, reported via serial data, is above a specified range.
86	Signal Invalid	This sub type is used for failures where some circuit quantity, reported via serial data, is not plausible given the operating conditions.
87	Missing Message	This sub type is used for failures where one (or more) expected message(s) is not received, e.g., periodic transmission where the repetition time is too high, or message not received as a result of unforeseen reset events of the concerning component (e.g. engine control unit communicating with ABS).
88	Bus off	This sub type is used for failures where a data bus is not available.
89	Data Transfer Failure	This subtype is for failures where an ECU requests a data transfer from an external source (off-board, on-board, or another ECU) and the data transfer initiates but fails to complete.
8A	Reserved	—
8B	Reserved	—
8C	Reserved	—
8D	Reserved	—
8E	Reserved	—
8F	Erratic	This sub type is used for failures where the signal, reported via serial data, is momentarily implausible or discontinuous.
90	Reserved	—
91	Parametric	This sub type is used for failures where the control module has detected that a component parameter (e.g., capacitance or inductance) is outside its expected range.
92	Performance or Incorrect Operation	This sub type is used for failures where the control module has detected that the component performance is outside its expected range or operating in an incorrect way.

Symptom Byte	Symptom Byte Description	Symptom Byte Definition
93	No Operation	This sub type is used for failures where the control module has detected that the component is not operating.
94	Unexpected Operation	This sub type is used for failures where the control module has detected that the component is operating in a way or at a time that it has not been commanded to operate.
95	Incorrect Assembly	This sub type is used for failures where the control module has detected that the component has been incorrectly installed (e.g., hydraulic pipes crossed over, circuits cross wired) or polarity errors.
96	Component Internal Failure	This sub type is used for failures where the control module has received an indication about the component that indicates a failure (e.g., an intelligent actuator or sensor) is indicating an internal fault.
97	Component or System Operation Obstructed or Blocked	This sub type is used for failures where the control module has detected that the operation of a component is prevented by an obstruction, e.g., advanced cruise system radar beam obstructed.
98	Component or System Over Temperature	This sub type is used for failures where the control module has detected that the temperature is too high for the correct operation of the component or system.
99	Exceeded Learning Limit	This sub type is used for failures where the control module has detected that the component or system has exceeded the expected range allowed for learning component tolerances.
9A	Component or System Operating Conditions	This sub type is used for failures where the control module has detected that environmental or other operating conditions are either temporarily or permanently outside the design limits for correct operation such that all or part of a component function is inhibited or fails, e.g. a radio is disabled because its LCD display or its CD mechanism cannot operate at a low ambient temperature.
9B	High/Excessive Flow	This sub type is used for failures where the control module has detected that the component or system is operating above the expected flow range flow, e.g. too much EGR at idle.
9C	Low/Insufficient Flow	This sub type is used for failures where the control module has detected that the component or system is operating below the expected flow range flow, e.g. too little EGR at part throttle.
9D	Component or System Under Temperature	This sub type is used for failures where the control module has detected that the temperature is too low for the correct operation of the component or system.
9E	Stuck On	This sub type is used for failures where the control module detects the electrical circuit or switch is fixed in the ON / Applied state
9F	Stuck Off	This sub type is used for failures where the control module detects the electrical circuit or switch is fixed in the OFF / Released state.
A0	Reserved	—
A1	System Voltage	This sub type is used for failures, where the control module system voltage is outside the expected range but not identified as too high or too low.
A2	System Voltage Low	This sub type is used for failures where the control module system voltage is below a specified range.
A3	System Voltage High	This sub type is used for failures where the control module system voltage is above a specified range.
A4	Reserved	—
A5	Reserved	—
A6	Reserved	—
A7	Reserved	—

Symptom Byte	Symptom Byte Description	Symptom Byte Definition
A8	Reserved	—
A9	Reserved	—
AA	Reserved	—
AB	Reserved	—
AC	Reserved	—
AD	Reserved	—
AE	Reserved	—
AF	Reserved	—
B0	Reserved	—
B1	Reserved	—
B2	Reserved	—
B3	Reserved	—
B4	Reserved	—
B5	Reserved	—
B6	Reserved	—
B7	Reserved	—
B8	Reserved	—
B9	Reserved	—
BA	Reserved	—
BB	Reserved	—
BC	Reserved	—
BD	Reserved	—
BE	Reserved	—
BF	Reserved	—
C0	Reserved	—
C1	Reserved	—
C2	Reserved	—
C3	Reserved	—
C4	Reserved	—
C5	Reserved	—
C6	Reserved	—
C7	Reserved	—
C8	Reserved	—
C9	Reserved	—
CA	Reserved	—
CB	Reserved	—
CC	Reserved	—
CD	Reserved	—
CE	Reserved	—
CF	Reserved	—
D0	Reserved	—
D1	Reserved	—

Symptom Byte	Symptom Byte Description	Symptom Byte Definition
D2	Reserved	—
D3	Reserved	—
D4	Reserved	—
D5	Reserved	—
D6	Reserved	—
D7	Reserved	—
D8	Reserved	—
D9	Reserved	—
DA	Reserved	—
DB	Reserved	—
DC	Reserved	—
DD	Reserved	—
DE	Reserved	—
DF	Reserved	—
E0	Reserved	—
E1	Reserved	—
E2	Reserved	—
E3	Reserved	—
E4	Reserved	—
E5	Reserved	—
E6	Reserved	—
E7	Reserved	—
E8	Reserved	—
E9	Reserved	—
EA	Reserved	—
EB	Reserved	—
EC	Reserved	—
ED	Reserved	—
EE	Reserved	—
EF	Reserved	—
F0	Manufacturer Defined	This value is reserved for vehicle manufacturer/system supplier use.
F1	Manufacturer Defined	This value is reserved for vehicle manufacturer/system supplier use.
F2	Manufacturer Defined	This value is reserved for vehicle manufacturer/system supplier use.
F3	Manufacturer Defined	This value is reserved for vehicle manufacturer/system supplier use.
F4	Manufacturer Defined	This value is reserved for vehicle manufacturer/system supplier use.
F5	Manufacturer Defined	This value is reserved for vehicle manufacturer/system supplier use.
F6	Manufacturer Defined	This value is reserved for vehicle manufacturer/system supplier use.
F7	Manufacturer Defined	This value is reserved for vehicle manufacturer/system supplier use.

Symptom Byte	Symptom Byte Description	Symptom Byte Definition
F8	Manufacturer Defined	This value is reserved for vehicle manufacturer/system supplier use.
F9	Manufacturer Defined	This value is reserved for vehicle manufacturer/system supplier use.
FA	Manufacturer Defined	This value is reserved for vehicle manufacturer/system supplier use.
FB	Manufacturer Defined	This value is reserved for vehicle manufacturer/system supplier use.
FC	Manufacturer Defined	This value is reserved for vehicle manufacturer/system supplier use.
FD	Manufacturer Defined	This value is reserved for vehicle manufacturer/system supplier use.
FE	Manufacturer Defined	This value is reserved for vehicle manufacturer/system supplier use.
FF	Manufacturer Defined	This value is reserved for vehicle manufacturer/system supplier use.

Symptoms - Vehicle

Body Hardware and Trim

[Link target (target-id 220830-) not found]

Body Repair

- [Link target (target-id 266613-) not found]
- [Link target (target-id 263864-) not found]

Body Systems

- [Link target (target-id 157990-) not found]
- [Link target (target-id 48522-) not found]
- [Link target (target-id 157988-) not found]
- [Link target (target-id 157992-) not found]
- [Link target (target-id 157994-) not found]
- [Link target (target-id 61936-) not found]

Brakes

- [Link target (target-id 1496-) not found]
- [Link target (target-id 302729-) not found]
- [Link target (target-id 50306-) not found]
- [Link target (target-id 54639-) not found]

Driveline/Axle

- [Link target (target-id 64694-) not found]
- [Link target (target-id 64690-) not found]
- [Link target (target-id 150354-) not found]
- [Link target (target-id 64697-) not found]

Driver Information and Entertainment

- [Link target (target-id 149620-) not found]
- [Link target (target-id 47032-) not found]
- [Link target (target-id 158155-) not found]
- [Link target (target-id 284269-) not found]
- [Link target (target-id 158091-) not found]

Engine/Propulsion

- [Link target (target-id 37791-) not found]
- [Link target (target-id 213827-) not found]
- [Link target (target-id 10846-) not found]
- [Link target (target-id 307123-) not found] – 3.0L (LZ0) Diesel engine
- [Link target (target-id 227894-) not found] – 5.3L (L84) or 6.2L (L87) engine
- [Link target (target-id 37429-) not found]
- [Link target (target-id 302760-) not found] – 3.0L (LZ0) Diesel engine
- [Link target (target-id 226061-) not found] – 5.3L (L84) or 6.2L (L87) engine
- [Link target (target-id 37994-) not found]

General Information

[Link target (target-id 62604-) not found]

HVAC

- [Link target (target-id 169242-) not found]
- [Link target (target-id 49126-) not found]

Power and Signal Distribution

- [Link target (target-id 159675-) not found]
- [Link target (target-id 259572-) not found]
- [Link target (target-id 121150-) not found]
- [Link target (target-id 62211-) not found]

Roof

[Link target (target-id 56634-) not found]

Safety and Security

- [Link target (target-id 284270-) not found]
- [Link target (target-id 158595-) not found]
- [Link target (target-id 284271-) not found]
- [Link target (target-id 349983-) not found]
- [Link target (target-id 158156-) not found]
- [Link target (target-id 346599-) not found]
- [Link target (target-id 56800-) not found]
- [Link target (target-id 57885-) not found]
- [Link target (target-id 151732-) not found]

Seats

- [Link target (target-id 160302-) not found]
- [Link target (target-id 160303-) not found]

Steering

- [Link target (target-id 55202-) not found]
- [Link target (target-id 65643-) not found]

Suspension

- [Link target (target-id 62585-) not found]
- [Link target (target-id 59474-) not found]

Transmission

- [Link target (target-id 284831-) not found]
- [Link target (target-id 192283-) not found] – MP 3015 (NP0) transfer case
- [Link target (target-id 161481-) not found] – MP 3025 (NQH) transfer case

Engine Does Not Crank

Refer to the appropriate diagnostic procedure below for the symptom observed.

- [Link target (target-id 306209-) not found]
- [Link target (target-id 37780-) not found]

Engine Cranks But Does Not Run

Refer to the appropriate diagnostic procedure below for the vehicle being serviced.

- [Link target (target-id 307245-) not found] – 3.0L (LZ0) Diesel engine
- [Link target (target-id 227835-) not found] – 5.3L (L84) or 6.2L (L87) engine

Inspection/Maintenance System Check

Refer to the appropriate diagnostic procedure below for the vehicle being serviced.

- [Link target (target-id 307357-) not found] – 3.0L (LZ0) Diesel engine
- [Link target (target-id 228015-) not found] – 5.3L (L84) or 6.2L (L87) engine

Diagnostic Repair Verification

Note: After a repair has been made, some DTCs require the ignition to be turned Off and then back On before the scan tool function will clear the DTC.

1. Ignition/Vehicle » Off
2. Install any components or connectors that have been removed or replaced during diagnosis.
3. Perform any adjustment, programming or setup procedures that are required when a component or module is removed or replaced.
4. Perform the following action:
   - 4.1. Ignition » On / Vehicle » In Service Mode
   - 4.2. Clear the DTCs.
   - 4.3. Ignition/Vehicle » Off
   - 4.4. Driver Door» Open& Close
   - 4.5. Wait for greater than 2 min. orInstrument Panel = Off
5. Perform the Circuit/System Verification and verify the result ends with an All OK — If available

   or

   If the repair was related to a DTC, duplicate the Conditions for Running the DTC and use the Freeze Frame/Failure Records, if applicable, in order to verify the DTC does not set. If the DTC sets or another DTC is present » Refer to: *Diagnostic Trouble Code (DTC) List - Vehicle 2-301*

   or

   If the repair was symptom related, duplicate the conditions under which the customer concern occurred to verify the repair. If the customer concern reoccurs or another symptom is present » Refer to: *Symptoms - Vehicle 2-374*

Proactive Alerts List

This master list includes all applicable Proactive Alert Identifiers in alphanumeric order.

Proactive alert identifiers are stored in the K73 Telematics Communication Interface Module and can only be cleared using a scan tool.

Note: If the concern is still present after following the steps for Diagnostics in any of the Proactive Alert Identifiers, contact GM TAC for further assistance. The GM TAC Agent will arrange for the stuck Proactive Alert to be cleared from OnStar Back Office.

Proactive Alerts List

Proactive Alert Service Message	Diagnostic Procedure
SAC001	12 V Starting and Charging- [Link target (target-id 276794-) not found]
SAC002	12 V Starting and Charging- [Link target (target-id 276795-) not found]
SAC003	12 V Starting and Charging- [Link target (target-id 276796-) not found]
SAC004	12 V Starting and Charging- [Link target (target-id 276797-) not found]
SAC005	12 V Starting and Charging- [Link target (target-id 276798-) not found]

Description and Operation

Proactive Alerts Description and Operation

Proactive Alert System Overview

Note: The customer must enroll their vehicle in this program through the OnStar website or with an OnStar advisor to receive Proactive Alerts. When the customer enrolls their vehicle, they select their notification preferences (email address, in-vehicle alert, and/or text message). They also identify their preferred service provider which is often the selling dealer.

This feature collects and stores specific system performance data each ignition cycle. The data is then transmitted via the cellular system (OnStar) when the On/Off Vehicle Switch has been in Run or Accessory power mode for ten minutes. The transmitted data is stored off-board the vehicle and analyzed by special algorithms to detect degraded performance. When monitored system performance degrades to predetermined levels, the off-board system sends a Proactive Alert identifier. The affected system is identified within the alert.

When a Proactive Alert is set, one or more of the following may occur:

- E-mail and/or text message is sent to the customer
- E-mail is sent to the preferred service provider (Customer Experience Manager at GM Dealers)
- A message is sent to the vehicle through the cellular system

When the vehicle receives the Proactive Alert identifier, it is stored in the Communication Interface Module. When stored, the Communication Interface Module may request a specific identifier to display on the radio and/or play an audio message. Each identifier is displayed and/or played one time only when the vehicle is started after the Alert has been set. If there is no performance improvement detected within seven days and then again at fourteen days, the system will send a reminder which contains the same identifier as the original.

When the collected data indicates component performance is normal again, no reminder alerts are sent and the system continues to monitor as before the active alert.

Proactive Alert identifiers stored in the Communication Interface Module will clear once the system is repaired. They can also be cleared using a scan tool, if desired. Ask the customer if they can produce the E-mail and check the date it was sent if you suspect that it is not active. If the customer is unable to provide the documentation, the Proactive Alert can be verified utilizing the scan tool: “Vehicle Diagnostics” >> “Vehicle Proactive Alerts”, or Service Workbench Alerts.

Note: The identifier will not be retained if the Communication Interface Module is replaced.

Note: If the concern is still present after following the steps for Diagnostics in any of the Proactive Alert Identifiers, contact GM TAC for further assistance. The GM TAC Agent will arrange for the stuck Proactive Alert to be cleared from OnStar Back Office.

Power of Green Overview

Note: Power of Green is only available for vehicles that are enrolled in Proactive Alerts.

“Power of Green” utilizes available vehicle data collected through OnStar to establish a history of 12V battery health and determine a Battery Condition. The history is based on Battery voltage, current, and other prognostic-related data, which is collected onboard during every ignition cycle. The current Battery Condition can be accessed for enrolled vehicles via the Dashboard in Techline Connect (TLC). Battery Condition will include a timestamp (date/time) with the OnStar logo if valid.

Battery Condition will be one of the following four statuses:

Green

- “OnStar monitoring indicated good battery condition.”
- No fault detected internal to Battery
- It is unlikely that the Battery will require replacement at this time

Red

- “Battery replacement recommended.”
- SAC001 – Battery Low Cranking Capability Due to Shorted Cell
- Battery testing is NOT required, therefore a print out of the Warranty Code when the battery is replaced for SAC001 is not required.
- Follow SI procedure for Proactive Alert Identifier SAC001

Yellow

- “Starting and Charging proactive alerts detected. Please consult Service Information to diagnose the concern.”
- One of the following:
  - SAC002 – Low Cranking Capability Due to Battery High Resistance
  - SAC003 – Low Cranking Capability Due to Battery Low State of Charge
  - SAC004 – Low Cranking Capability Due to High Resistance in Starter System
  - SAC005 – Low Cranking Capability Due to High Resistance in Battery or Short in Starter System
- Follow SI procedure for appropriate Proactive Alert Identifier

Grey

- “Not enough data available to determine battery condition.”
- One of the following:
  - Vehicle is not enrolled in OnStar Proactive Alerts
  - Inability to contact the Power of Green data service
  - Insufficient recent ignition cycles to make a Red/Yellow/Green determination
- If a Battery issue is suspected, proceed to Battery Inspection/Test

Updated Battery Condition data may be obtained by selecting “Refresh” button next to the timestamp.

Note: Since the Green status is dependent on a history of battery health, the Battery Condition may not update immediately and turn Green if the battery is replaced.

While the vehicle is being serviced, the Battery Condition may change from Green depending on Service actions (e.g. if battery is disconnected or becomes discharged, status may change).

Section 3

Driver Information and Entertainment

Cellular, Entertainment, and Navigation **3-2**

Schematic and Routing Diagrams **3-2**

Radio/Navigation System Schematics 3-3

OnStar/Telematics Schematics 3-15

Video System Schematics 3-17

Description and Operation **3-20**

Active Noise Cancellation Description and Operation 3-20

OnStar Description and Operation 3-21

Radio/Audio System Description and Operation 3-26

Displays and Gauges **3-36**

Schematic and Routing Diagrams **3-36**

Instrument Cluster Schematics 3-37

Head-Up Display Schematics 3-39

Audible Warnings Schematics 3-40

Description and Operation **3-41**

Audible Warnings Description and Operation 3-41

Head-Up Display Description and Operation 3-42

Indicator/Warning Message Description and Operation 3-43

Instrument Cluster Description and Operation 3-43

Image Display Cameras **3-44**

Schematic and Routing Diagrams **3-44**

Image Display Camera Schematics 3-45

Description and Operation **3-50**

Rearview Camera Full Display Mirror Description and Operation 3-50

Rear Vision Camera Description and Operation 3-50

Surround Vision Camera Description and Operation 3-50

Secondary and Configurable Customer Controls **3-52**

Schematic and Routing Diagrams **3-52**

Steering Wheel Secondary/Configurable Control Schematics 3-53

Description and Operation **3-56**

Drive Mode Description and Operation 3-56

Steering Wheel Controls Description and Operation 3-56

Driver Information and Entertainment

Cellular, Entertainment, and Navigation

Schematic and Routing Diagrams

Radio/Navigation System Schematics (Radio Power, Ground, Serial Data, and Subsystem References)

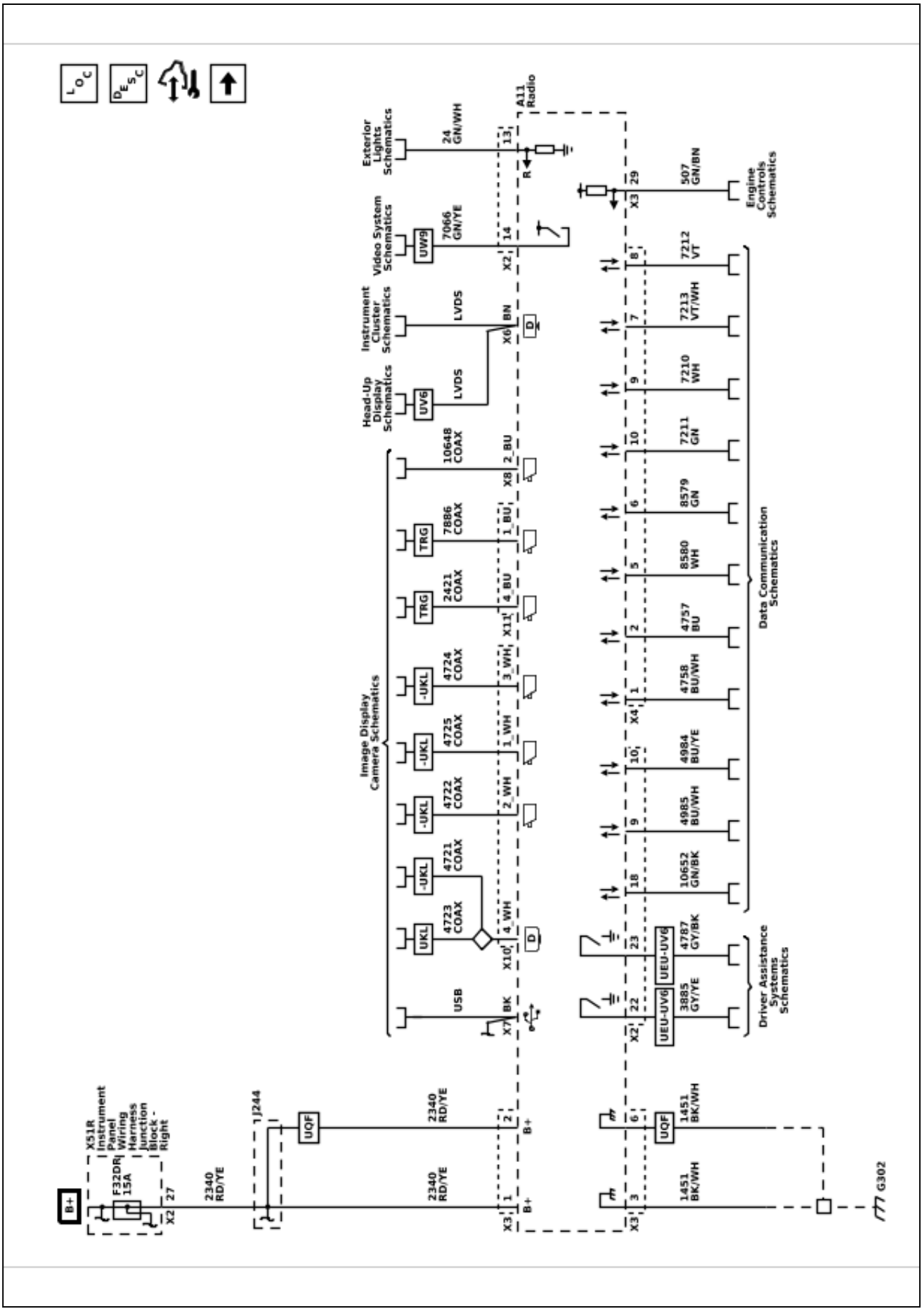

6613331

6613332

Radio/Navigation System Schematics (Radio Control and Display)

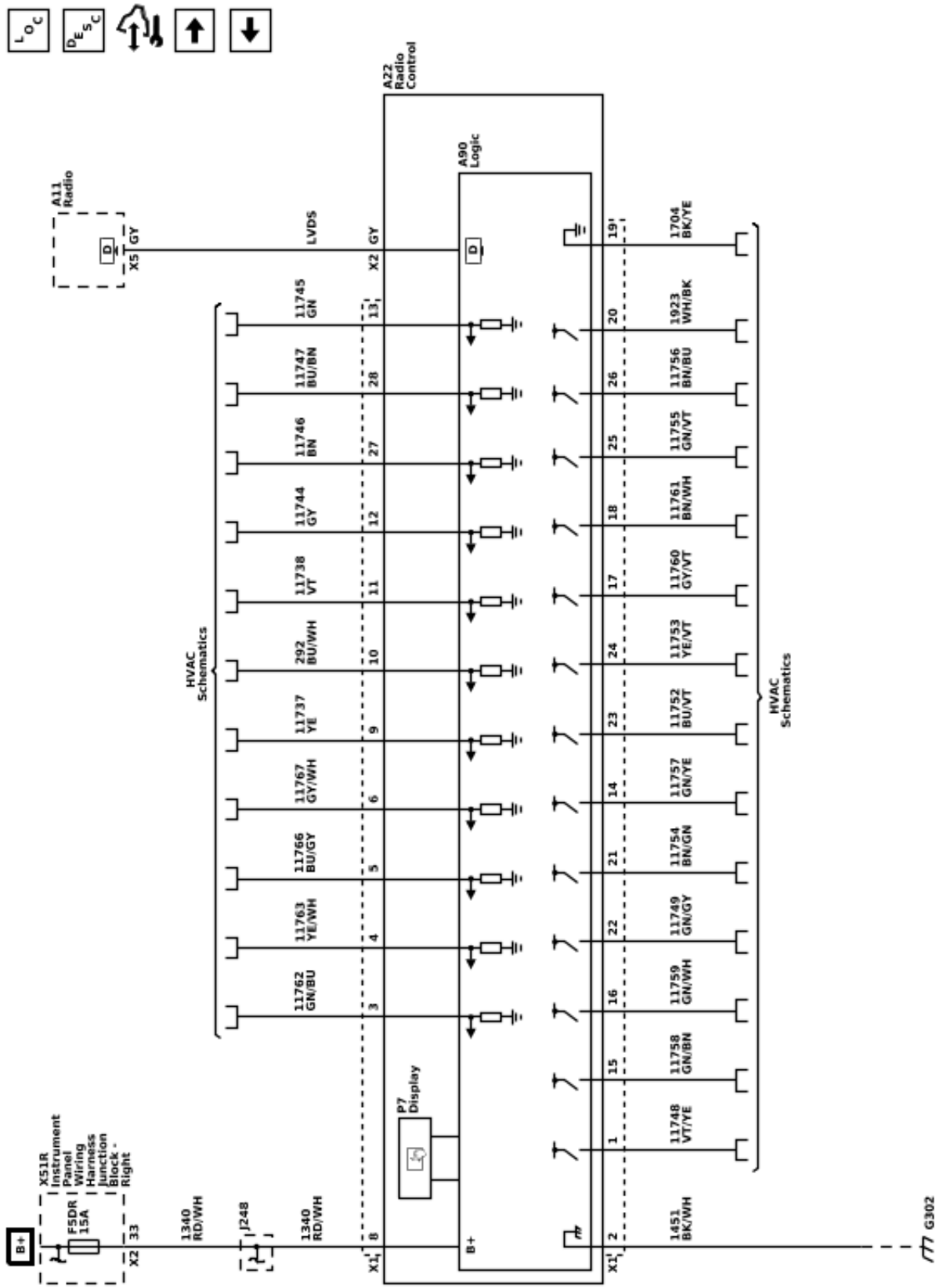

Radio/Navigation System Schematics (Microphones)

6613552

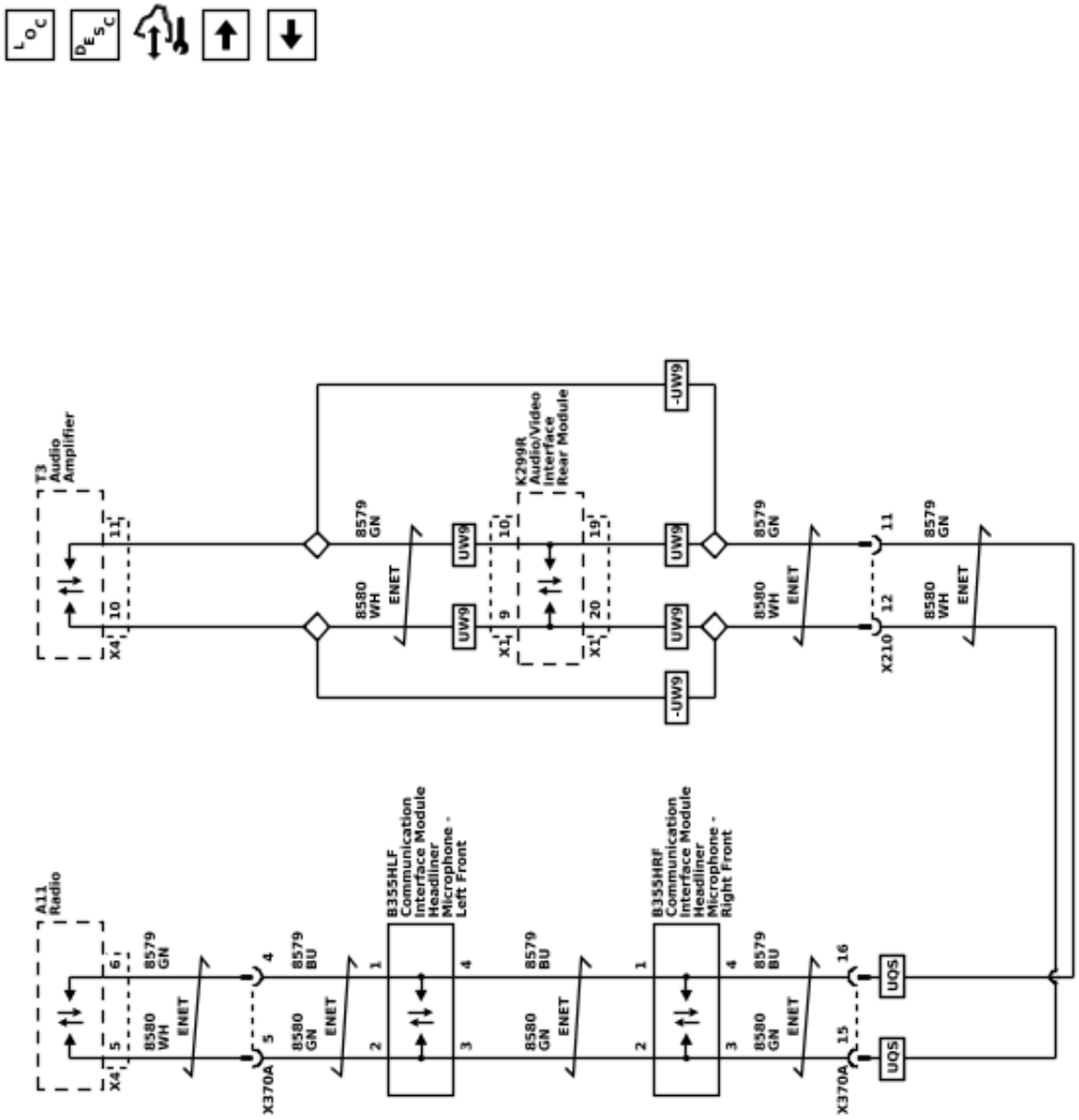

6613333

Radio/Navigation System Schematics (Audio Amplifier Power, Ground, and Serial Data (UQS))

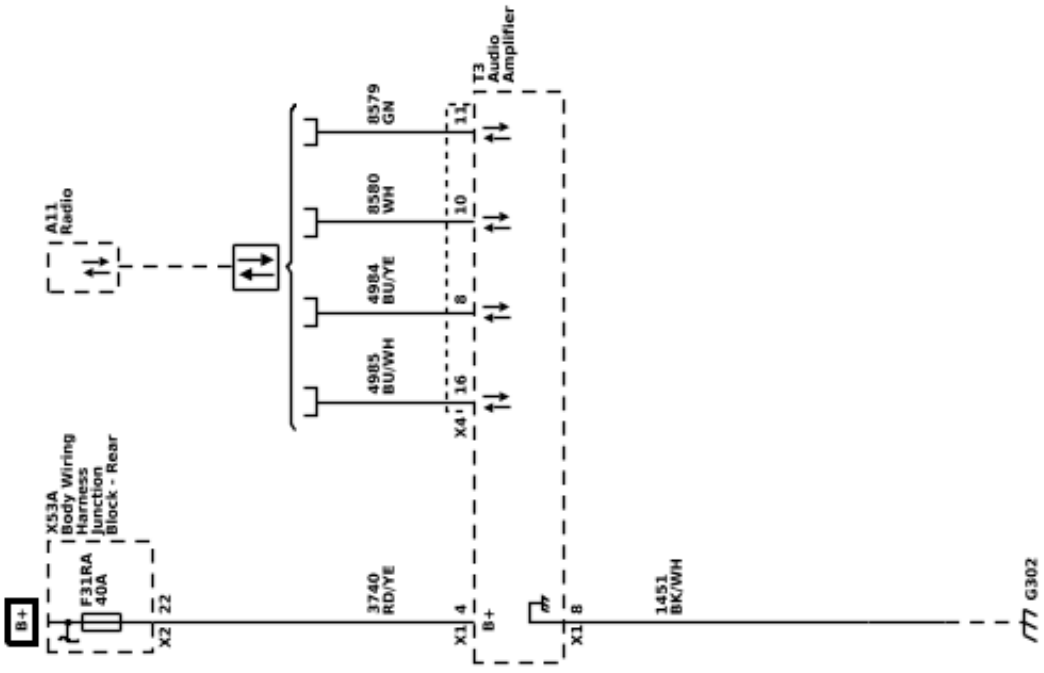

Radio/Navigation System Schematics (Speakers - Instrument Panel, Floor Console, and Front Doors (UQS))

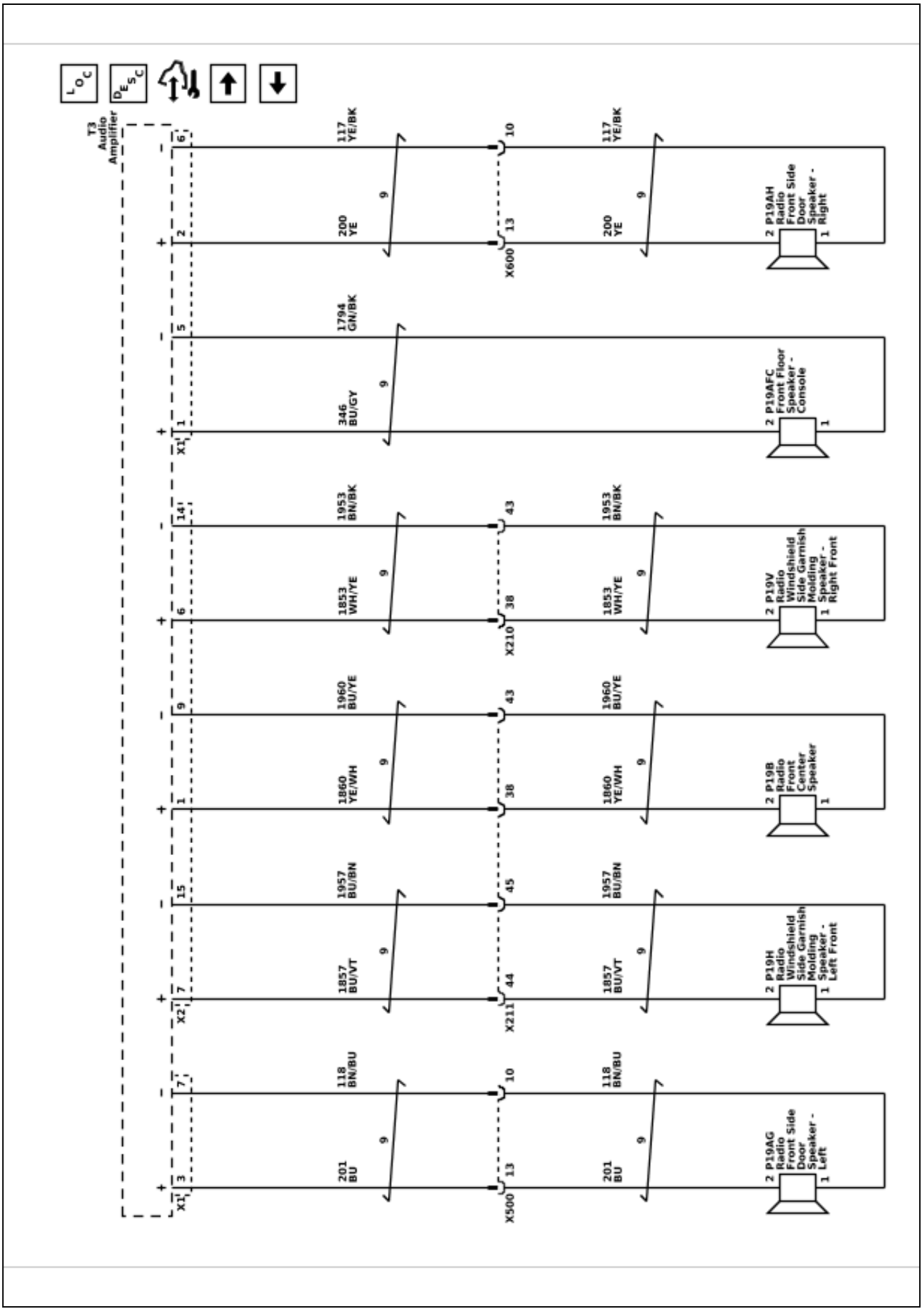

Radio/Navigation System Schematics (Speakers - Rear Doors and Rear Compartment (UQS))

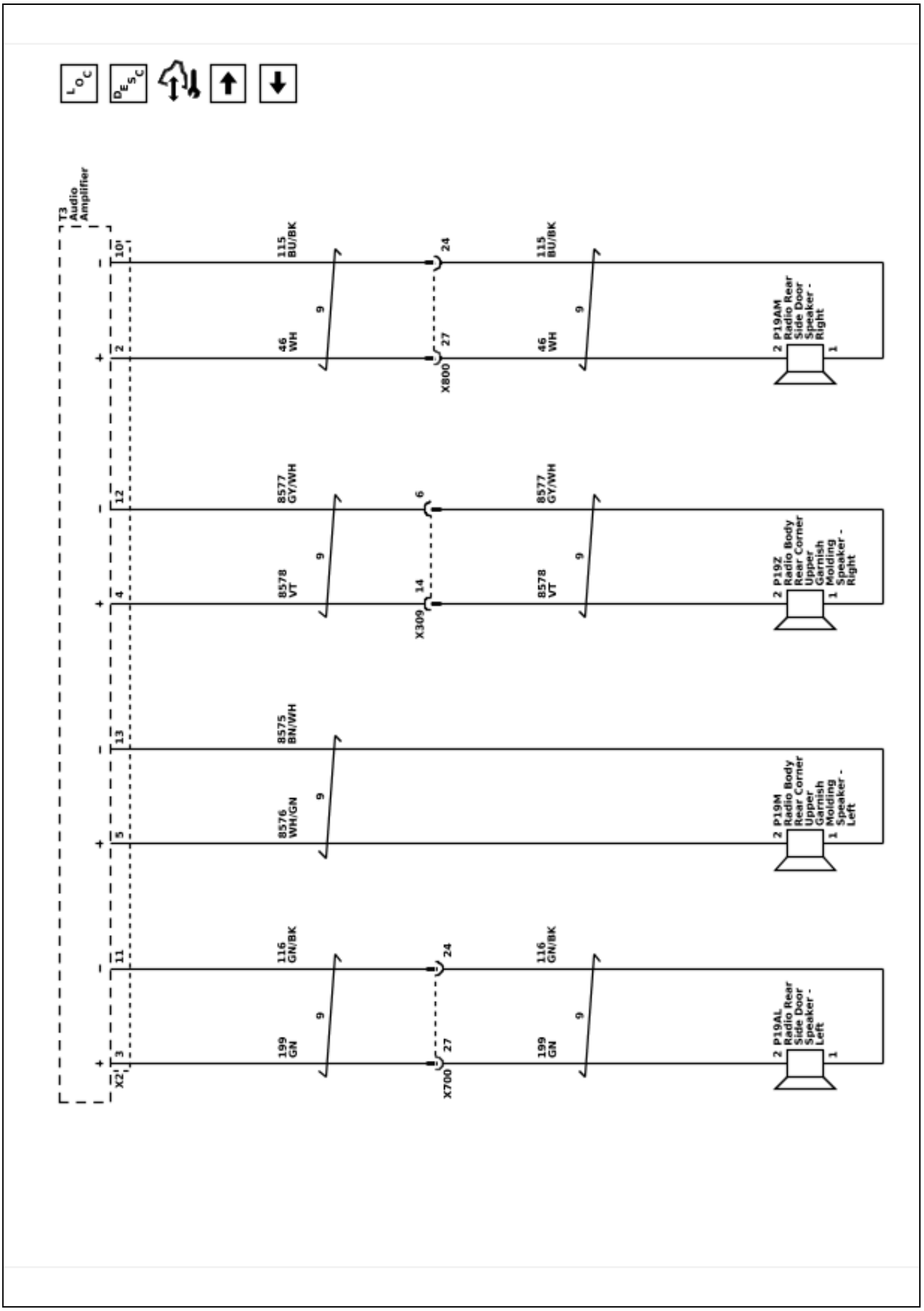

Radio/Navigation System Schematics (Speakers - Instrument Panel and Front Doors (UQF))

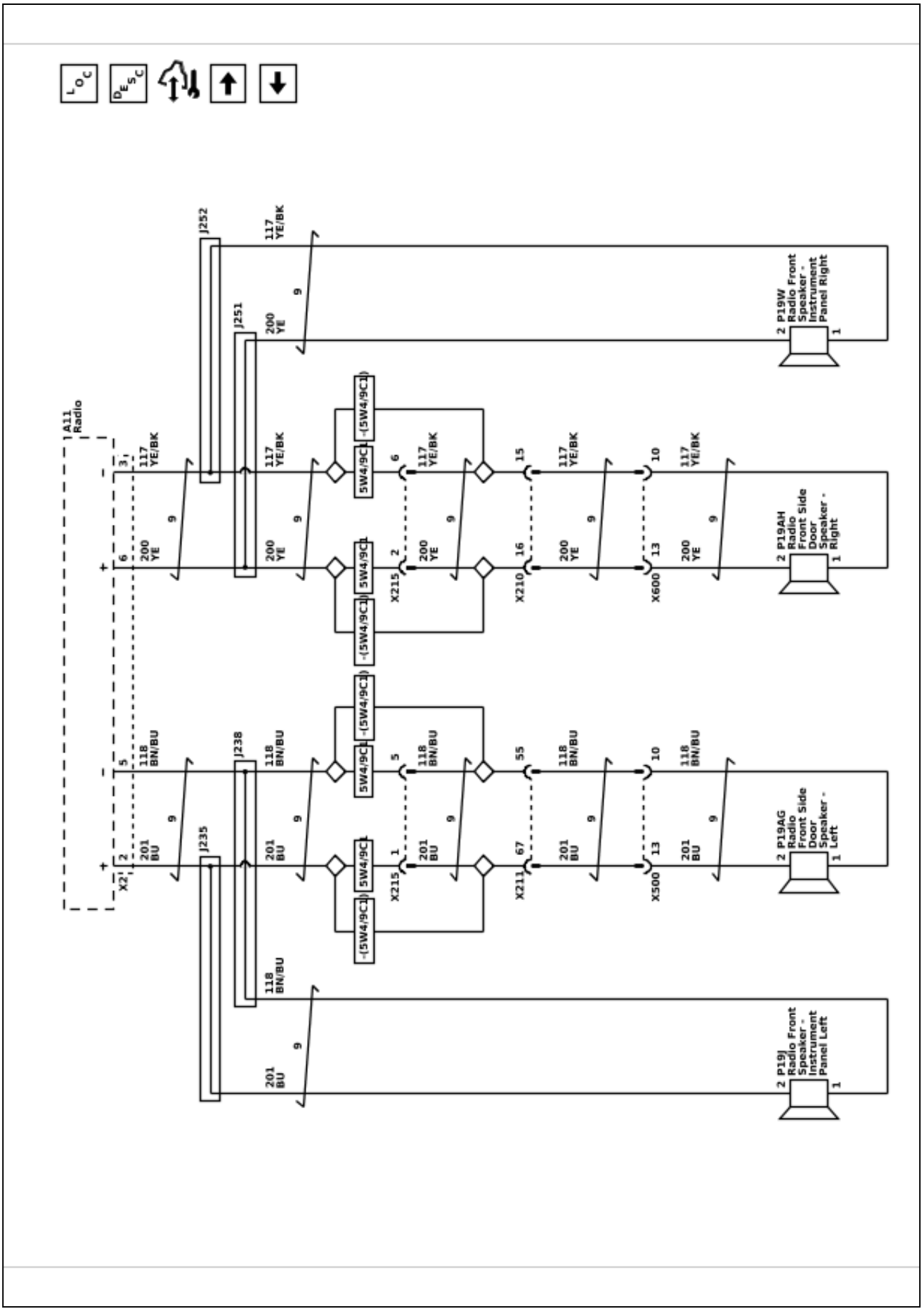

Radio/Navigation System Schematics (Speakers - Rear Doors (UQF))

6613335

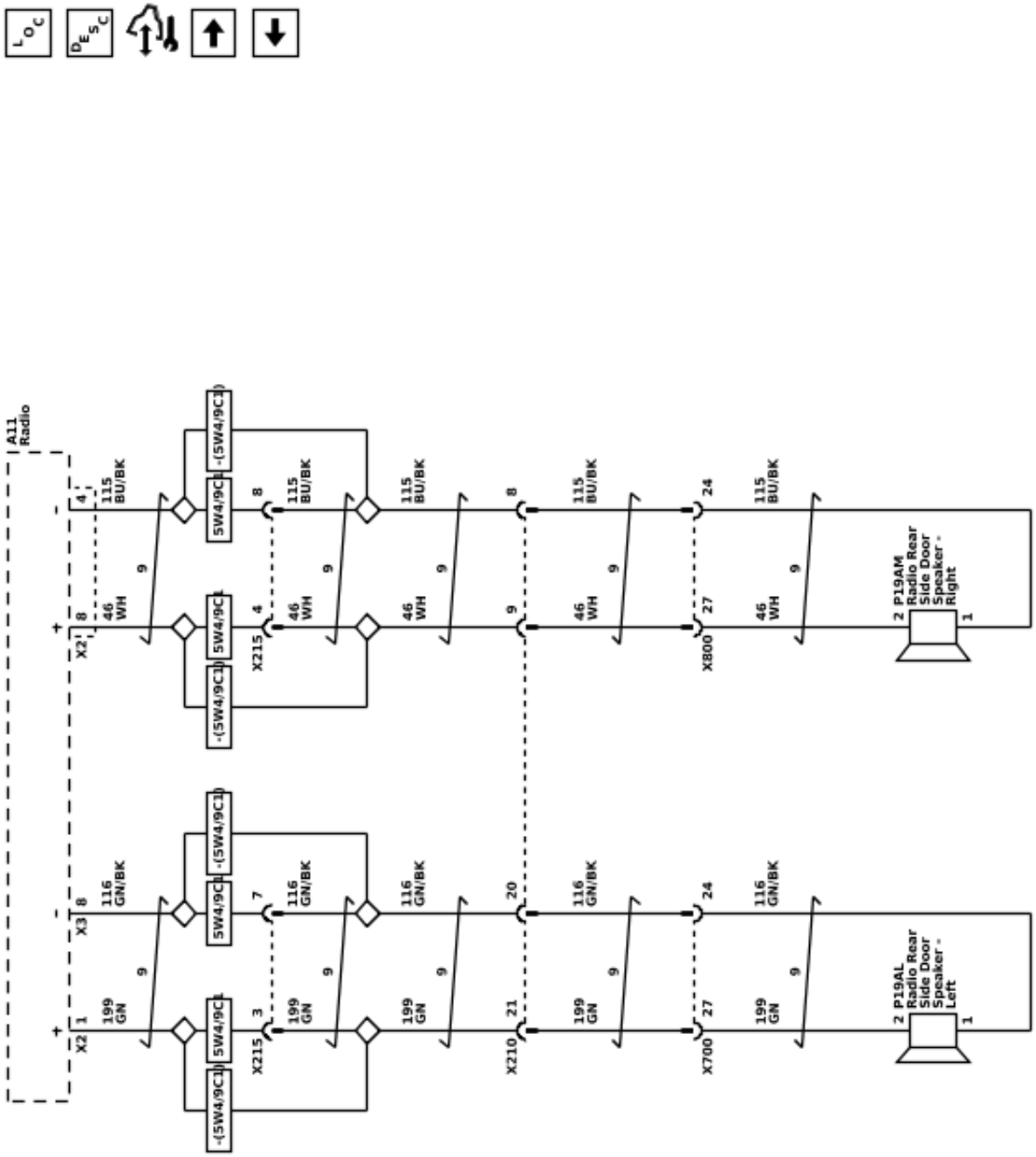

6613337

Radio/Navigation System Schematics (Antennas (- U2Q))

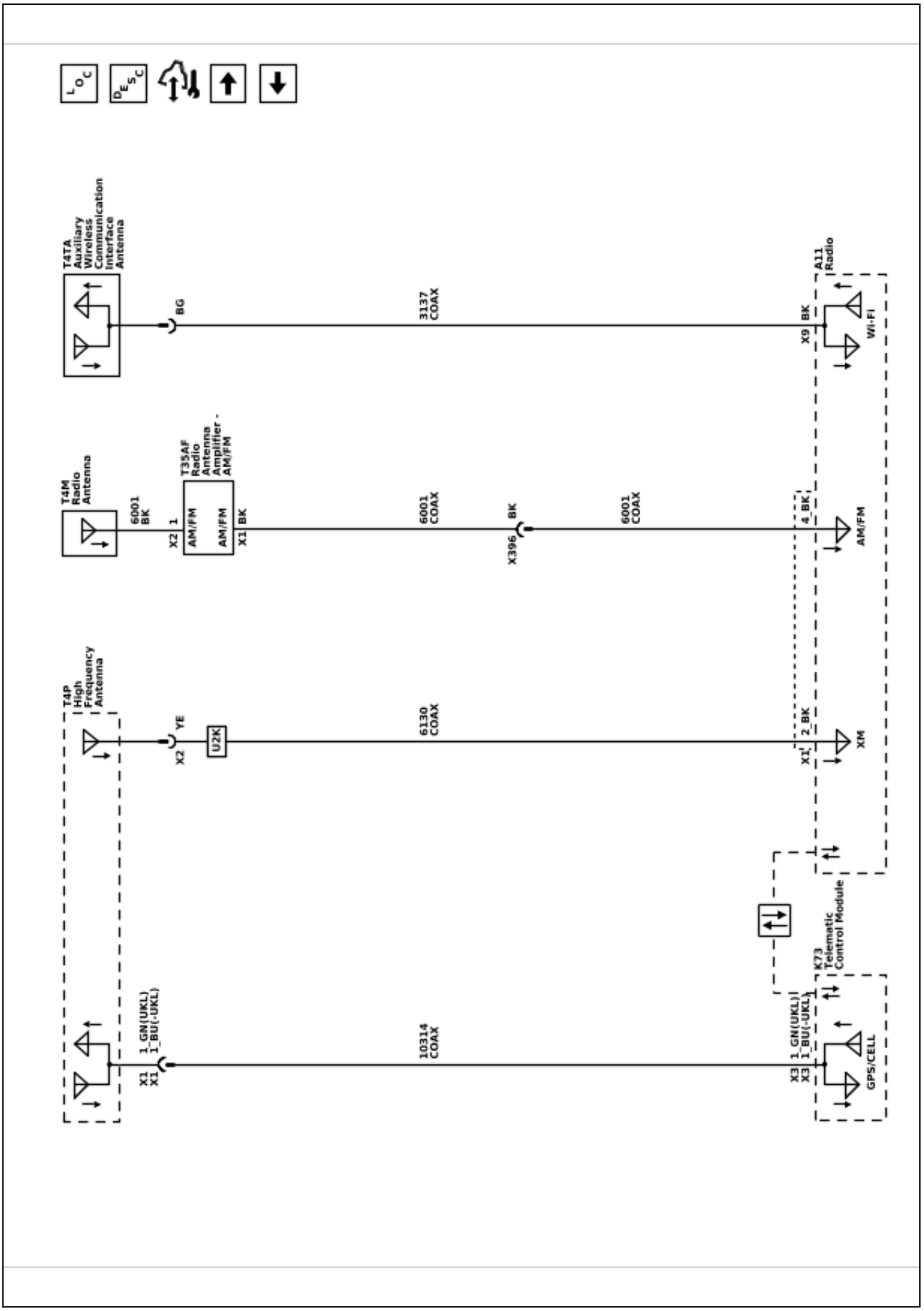

Radio/Navigation System Schematics (Antennas (U2Q))

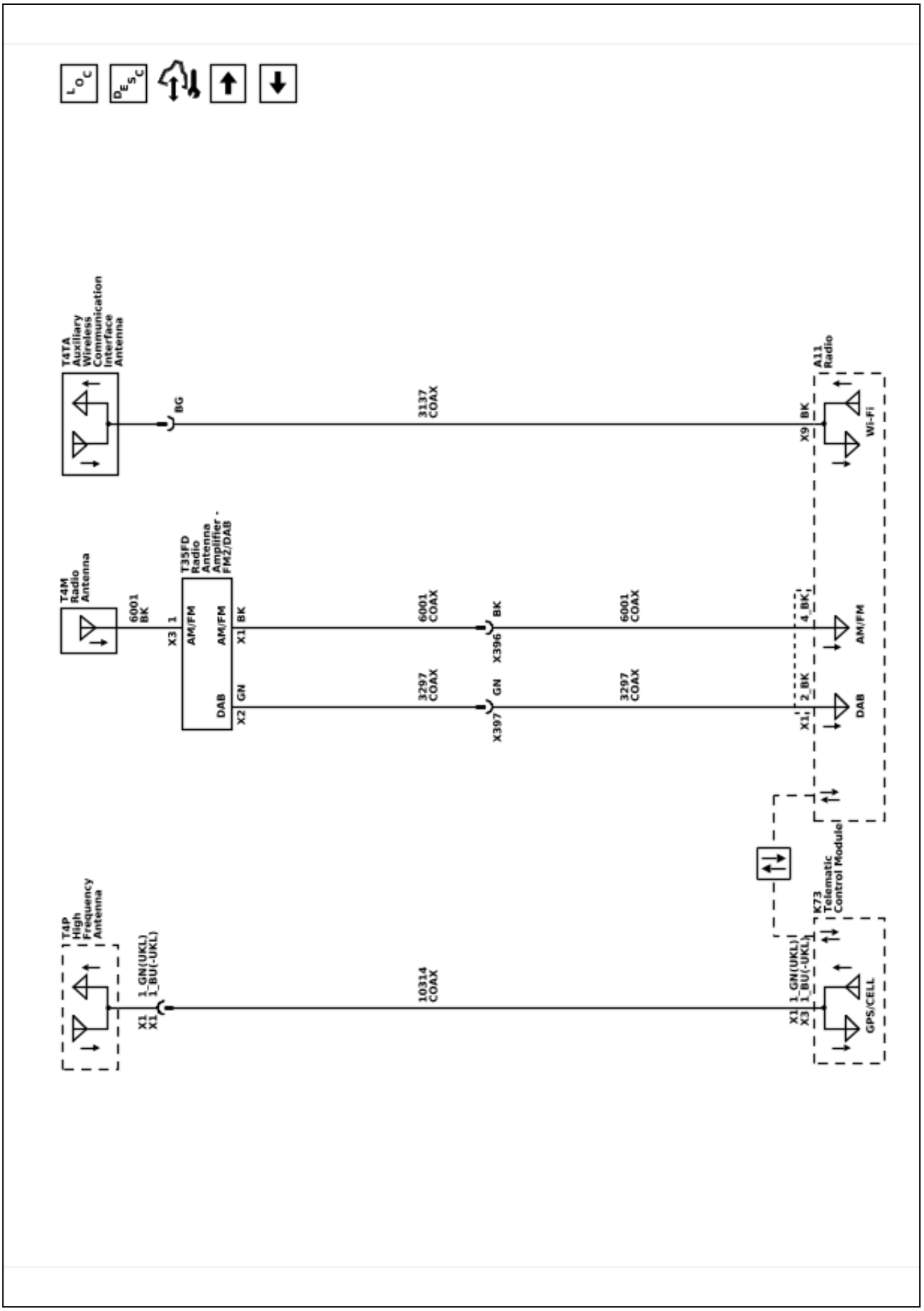

6613338

Radio/Navigation System Schematics (Auxiliary Input (AZ3))

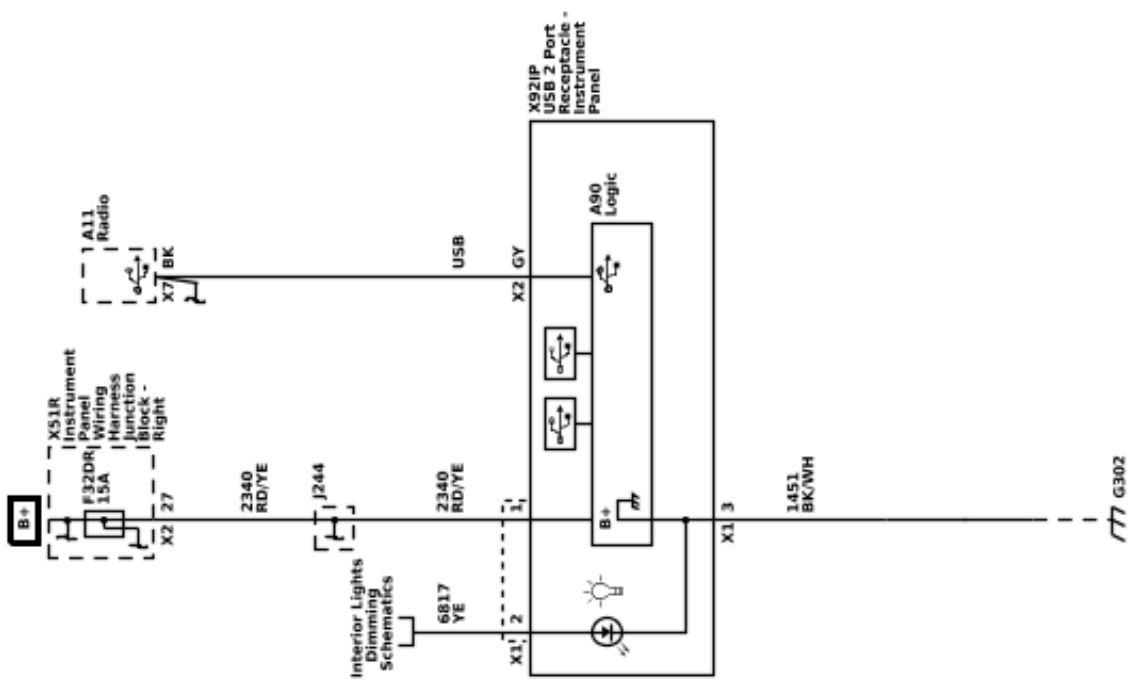

Radio/Navigation System Schematics (Auxiliary Inputs (- AZ3))

6613339

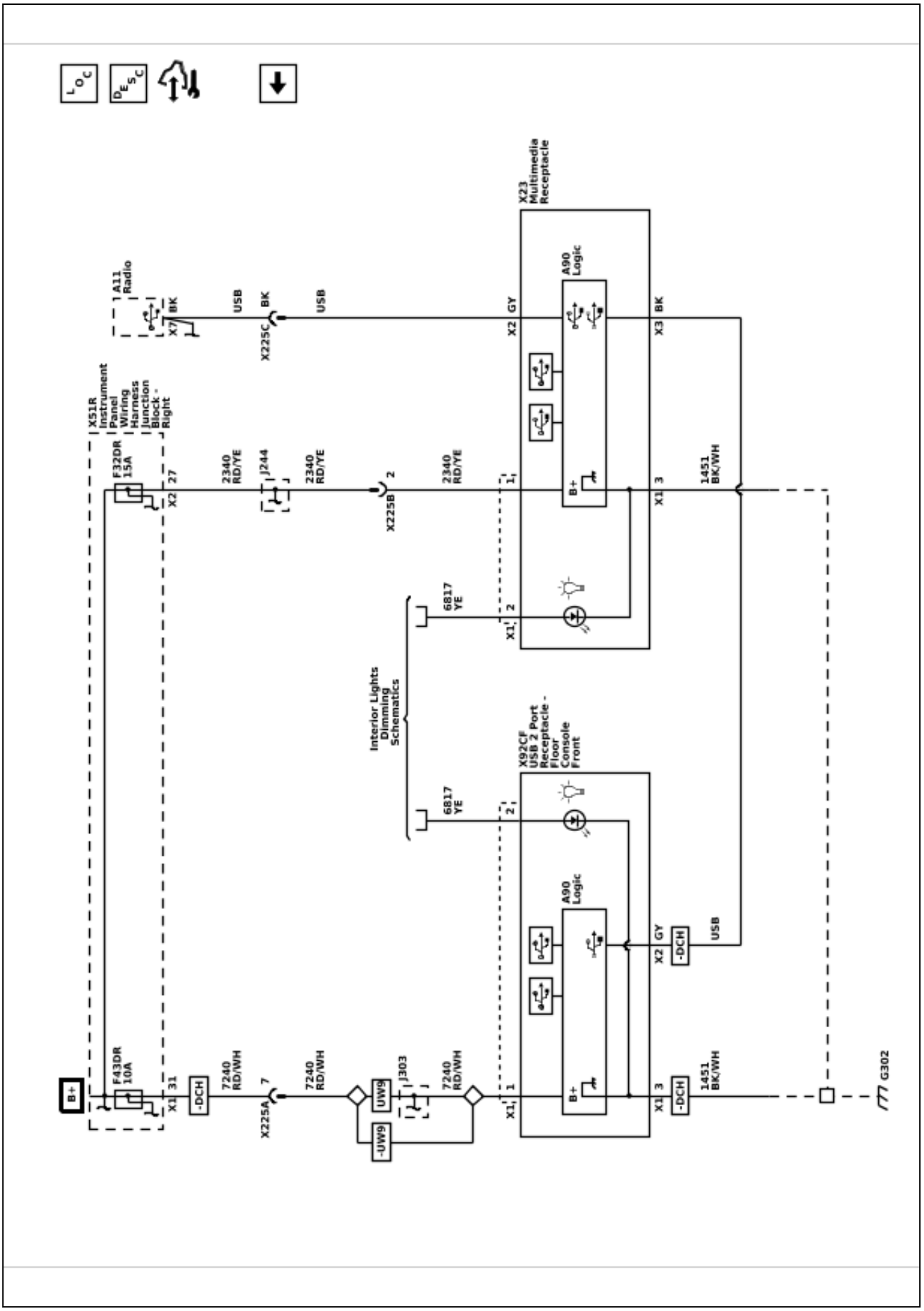

6613340

OnStar/Telematics Schematics (Power, Ground, Serial Data, Antennas, and Emergency Call Backup Speaker)

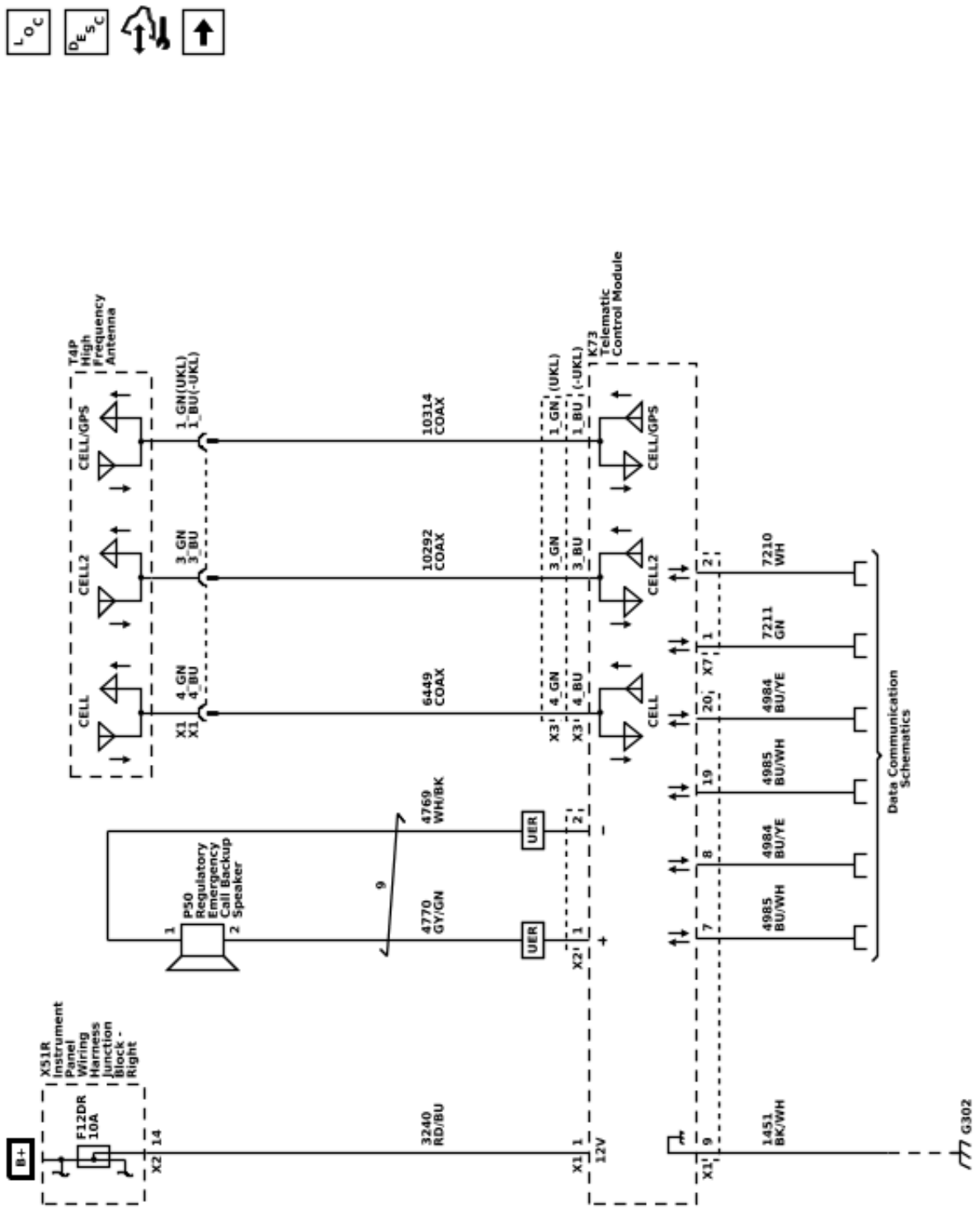

OnStar/Telematics Schematics (Controls and Audio Signals)

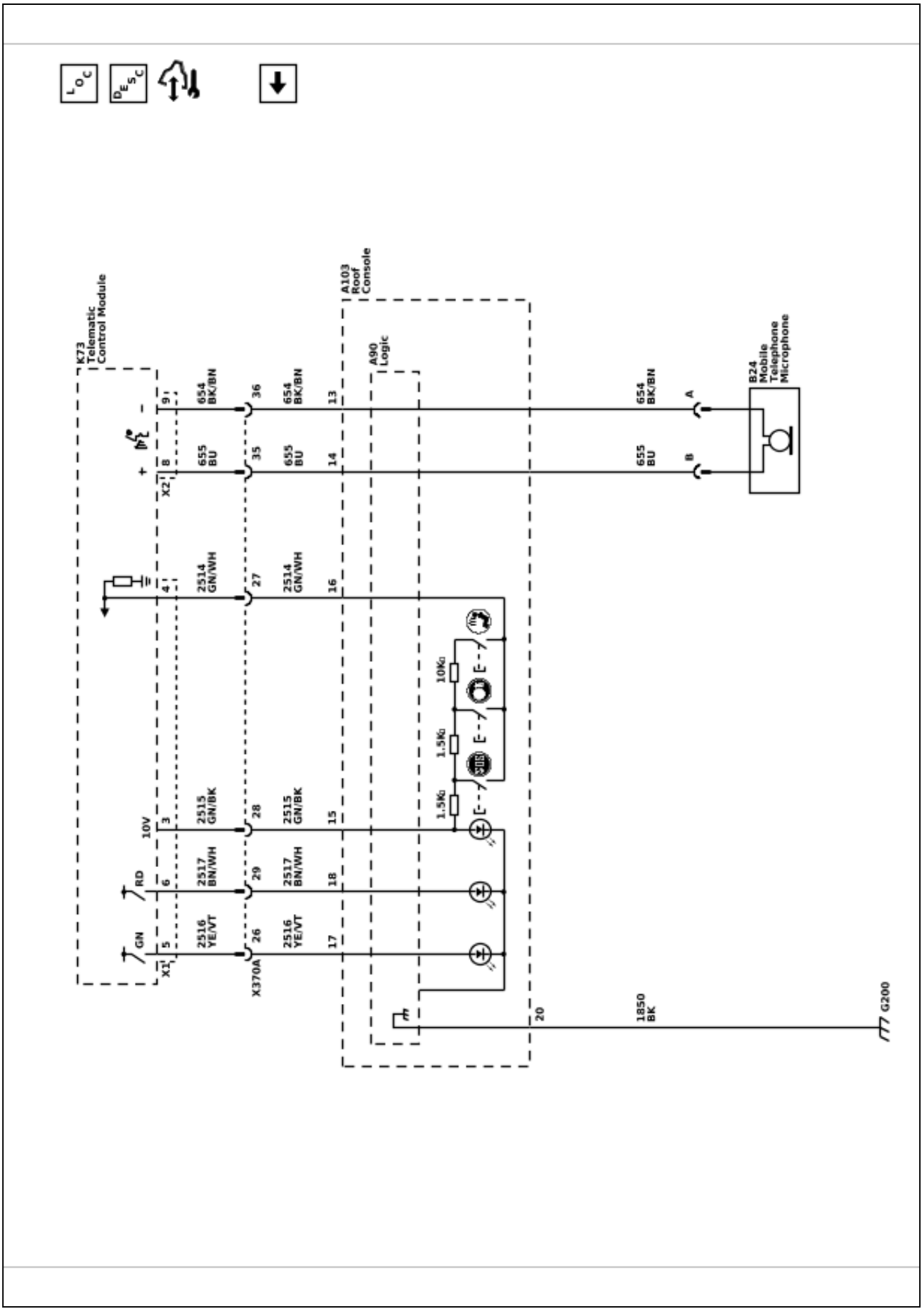

6613342

Video System Schematics (Rear Video Interface Module Power, Ground, and Serial Data (UW9))

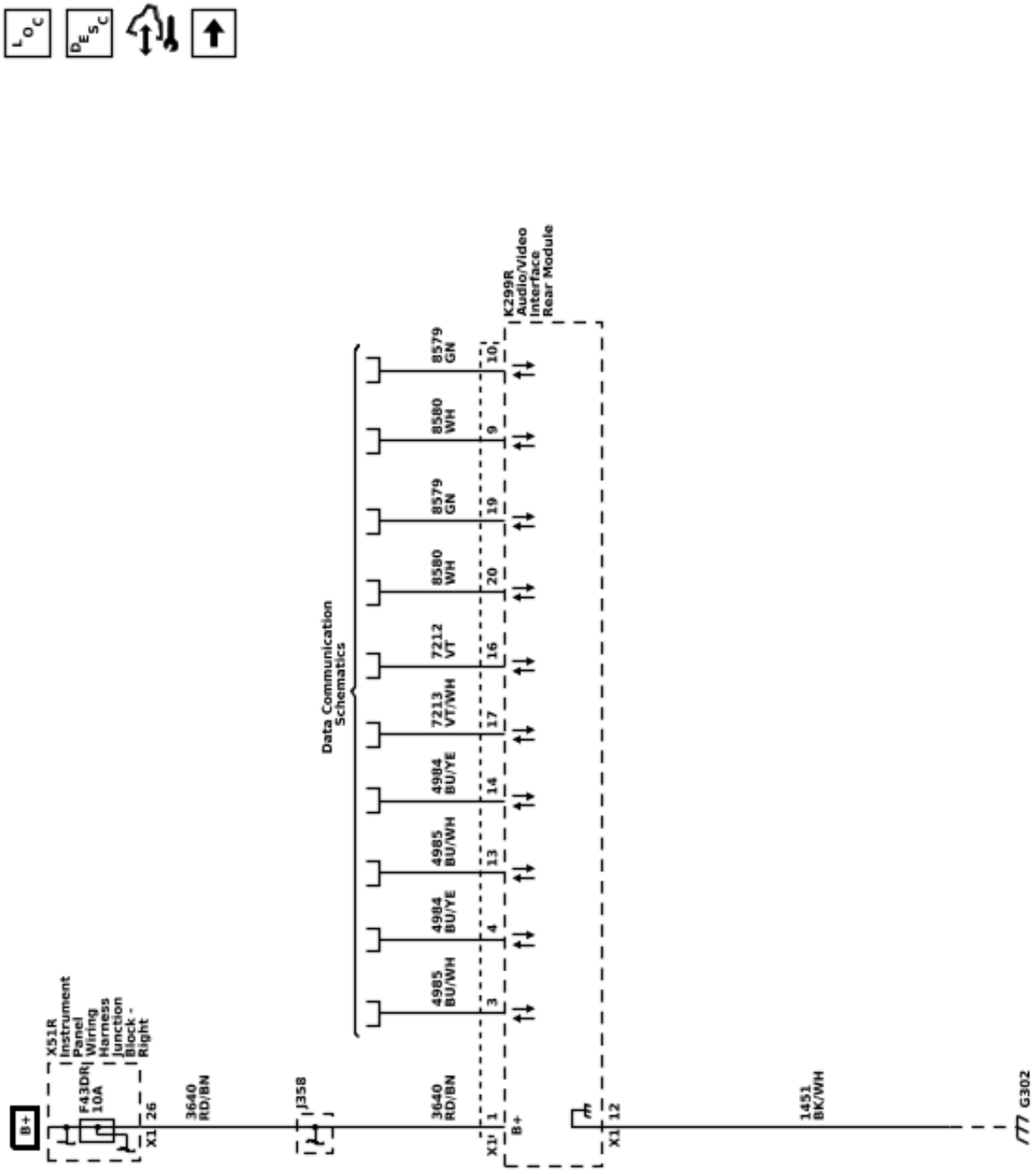

6613343

Video System Schematics (Rear Video Displays (UW9))

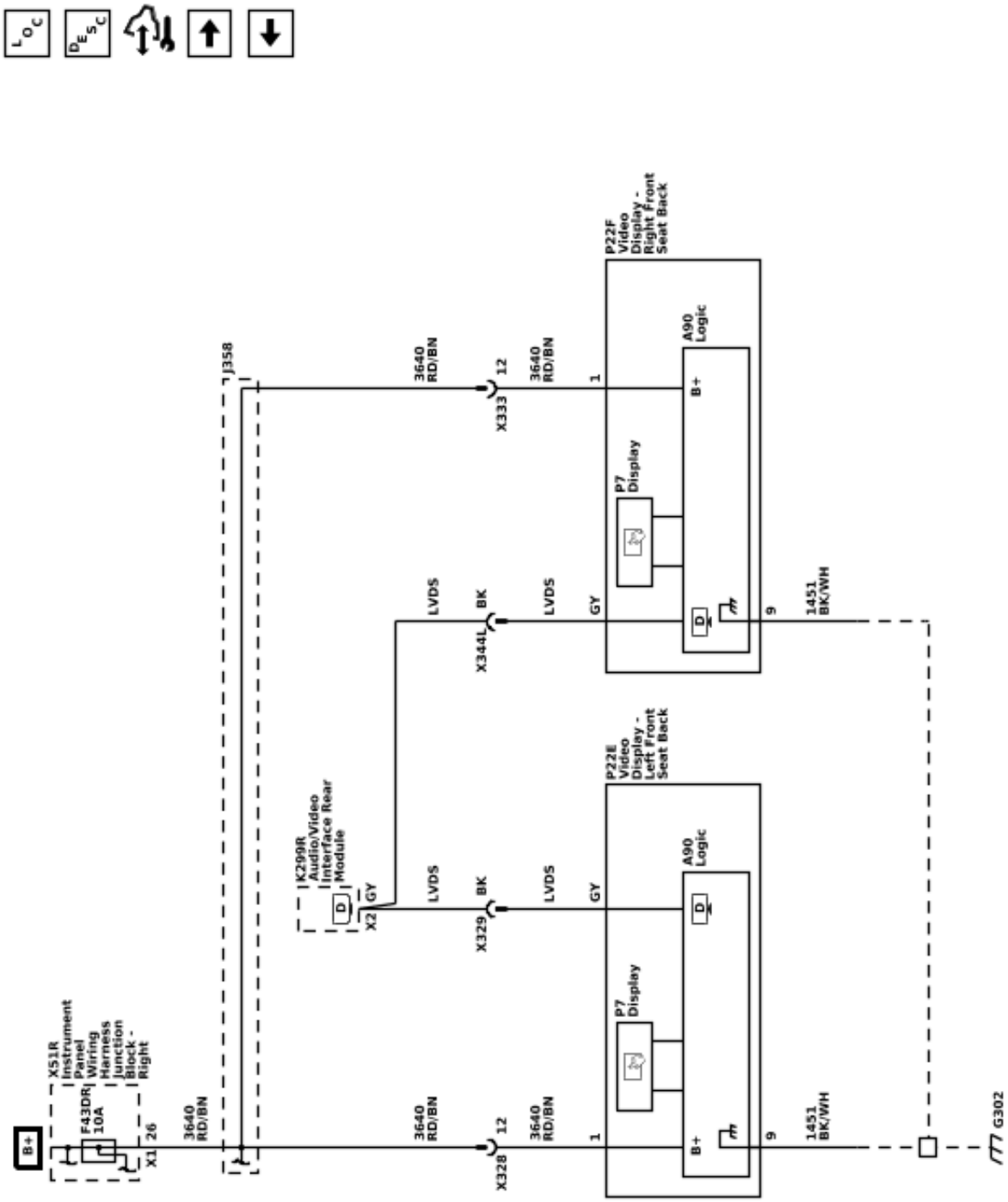

6613344

Video System Schematics (Rear Multimedia Receptacle (UW9))

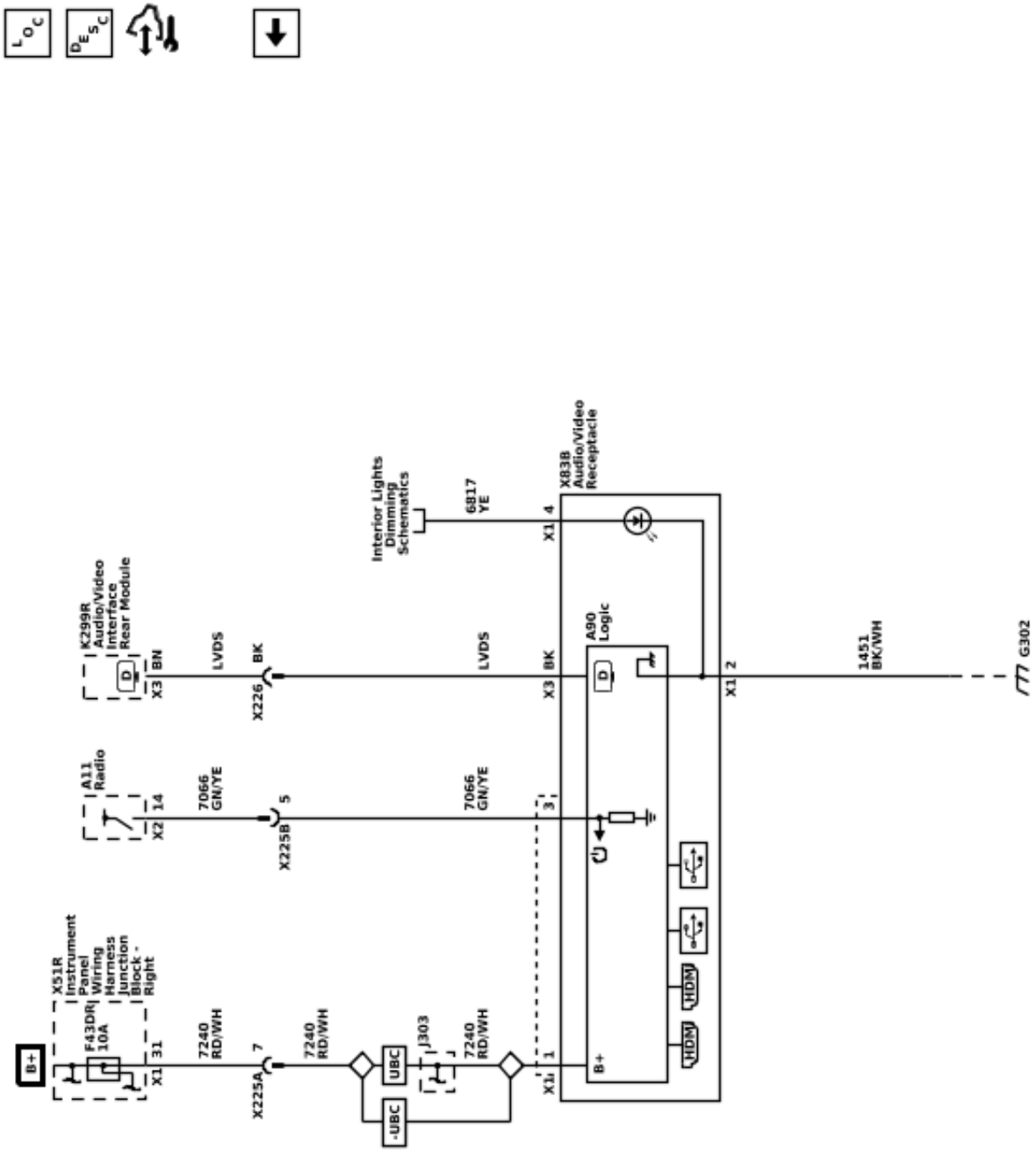

Description and Operation

Active Noise Cancellation Description and Operation

Reference Information

RPO	Description/Acronym	Application
NKC	Active Noise Cancellation (ANC)	ICE vehicles only, 1
NKD	Engine Sound Enhancement (ESE) Electric Vehicle Sound Enhancement (EVSE)	ICE vehicles only EV vehicles only
NKF	Masking Sound Enhancement (MSE)	EV vehicles only
NKR	Road Noise Cancellation (RNC)	ICE or EV, 1
1. ICE vehicles can use both NKR, NKC, and NKD.		

Circuit/System Description

The Active Noise Cancellation system is a method used to reduce the perception of certain undesirable sounds generated by the engine into the vehicle cabin. The systems uses microphone and engine speed signals, software integrated into the amplifier/active noise cancellation module, and the vehicle speakers to determine and generate the correct frequencies needed to achieve the desired reduction.

EVSE is a feature that utilizes a sound enhancement algorithm to play tones, random noise, customized waveforms and pitch shifted WAV files from the vehicle speakers to augment, complement and enhancement the naturally occurring high pitched tones produced by the EV propulsion system.

The microphones are located in the headliner to monitor noise/sounds in the vehicle cabin, and are directly connected to the amplifier/active noise cancellation module. The amplifier/active noise cancellation module also receives a discrete engine speed (RPM) signal from the engine control module. The amplifier/active noise cancellation module processes these inputs to determine the frequency of the undesirable sound. The amplifier/active noise cancellation module then calculates the appropriate cancellation frequency and outputs a cancellation signal (audio tone) to the vehicle speakers to reduce the perception of undesirable sounds by the vehicle occupants so the vehicle cabin appears quieter and without vibration.

- **NKC:** cancels induction, engine, and exhaust noise using microphones located in the headliner to check gain level and sends a 180° out of phase sine wave through the speakers to cancel noise.
- **NKD:** enhances the tone of motor and exhaust for effect.
- **NKR:** uses accelerometers mounted on chassis to pick up vehicle and road noise, sends an out of phase sine wave through the speakers to cancel noise.
- **NKF:** cancels low frequencies noise introduced to the cabin. Uses motor speed and torque for tone control.

The infotainment system on this vehicle may have several different configurations. To determine the specific configuration of the vehicle, please see the Service Parts ID Label, and refer to [Link target (target-id 47866-) not found] .

The main components of the Active Noise Cancellation system are:

- Microphones in the vehicle headliner. Use schematics to determine the number of microphones in each vehicle.
- A discrete engine speed (RPM) signal from the engine control module to the amplifier/active noise cancellation module.
- Active Noise Cancellation electronics and software integrated into the audio amplifier/active noise cancellation module.
- The vehicle speaker system, connected to the amplifier/active noise cancellation module, to output the desired cancellation frequencies.

The Active Noise Cancellation system is operational under the following conditions:

- The amplifier/active noise cancellation module has passed all self diagnostic checks
- All doors are closed
- Battery voltage is between 9.5 V and 16 V
- The vehicle cabin temperature is less than 140°F (60°C)
- Engine speed is between 550 and 3000 RPM

OnStar Description and Operation

The OnStar® system consists of the following components:

- Telematic Control Module
- OnStar® Three Button Assembly
- Microphones
- Cellular Antenna
- Navigation Antenna
- Back Up Battery

The OnStar® system supports the following capabilities:

- WiFi Support
- TTY (Teletypewriter)
- FOTA (Firmware Over The Air)

This system also interfaces with the factory installed vehicle audio system.

Telematic Control Module

The OnStar® Telecommunications Platform (TCP) system communicates with various infotainment components via ethernet. The OnStar® TCP uses Global System for Mobile Communication (GSM) to communicate data and voice signals over the national cellular network. The Telematic Control Module (TCM) supports entertainment WiFi Hotspots by providing a connection to the cellular network for internet access. The module is capable of up to 5G LTE speeds and houses 2 technology systems, one to process Global Positioning System (GPS) data, and another for cellular information. The module sends and receives all cellular communications over two cellular antennas and cellular antenna coax cables.

The OnStar® TCP system has two antenna inputs, a primary cellular signal and a combined GPS/secondary cellular signal. OnStar® can receive signals from multiple global navigation satellite systems, including the United States developed GPS and Russian developed Global Navigation Satellite System (GLONASS).

The module also has the capability of activating certain features such as, the horn, remote engine starting, initiating door lock/unlock, or activating the exterior lamps using the serial data circuits. These functions can be commanded by the OnStar® Call Center per a customer request or mobile device app depending on vehicle and customer subscription.

Dedicated circuits are used to connect the TCM to a microphone, the button assembly, and radio. When equipped, the TCM may contain a back up battery (BUB) which is internal to the control module and replaceable through an access cover. The TCM communicates with the rest of the vehicle over the serial data bus and Ethernet.

Power is provided by a dedicated, fused B+ circuit. Ground is provided through the vehicle wiring harness attached to the module. The power mode state is determined by the TCM through serial data messaging.

OnStar® Three Button Assembly

- The OnStar® button assembly may be part of the rearview mirror, or a separate, stand alone unit. The button assembly is comprised of 3 buttons or 3 capacitive touch buttons and status LED's or an error indicator. The buttons are defined as follows:
  - The answer/end button, which is black with a white phone icon or a white driver figure seated with voice signals near its face, allows the user to answer and end calls or initiate speech recognition.
  - The blue OnStar® call center button, which displays the OnStar® logo, allows the user to connect to the OnStar® call center.
  - The emergency button, which displays white letters "SOS" with red background, sends a high priority emergency call to the OnStar® call center when pressed.

If the green LED does not illuminate, this may indicate that the customers OnStar® subscription is not active or has expired. Push the blue OnStar® button to connect to an advisor who can then verify the account status.

The TCM supplies 10 volts to the OnStar® button assembly on the keypad supply voltage circuit. When pressed, each button completes a circuit across a resistor allowing a specific voltage to be returned to the TCM on the keypad signal circuit. Depending upon the voltage range returned the TCM is able to identify which button has been pressed.

The OnStar® status LED or error indicator is located near the buttons. The LED is green when the system is ON and operating normally. When any indicator is illuminated and flashing, it is an indication that a call is in progress. When the LED is red, this indicates a system malfunction is present. In the event there is a system malfunction and the OnStar® system is still able to make a call, the LED will flash red during the call.

Each LED or error indicator is controlled by either the TCM over dedicated LED signal circuits or by low speed CAN 5 serial data depending on the inside rearview mirror option. Ground for the LED is provided by the wiring harness attached to the button assembly.

Secondary OnStar® Controls

Some vehicles may have an additional button that when pushed can engage the OnStar® system. The button may be a symbol of a face with sound waves, or may say MUTE, or be a symbol of a radio speaker with a slash through it.

By engaging the OnStar® system with this feature, the user can interact with the system by use of voice commands. A complete list of these commands is supplied in the information provided to the customer. If the information is not available for reference, at any command prompt the user can say "HELP" and the TCM will return an audible list of available commands.

Microphones

This system utilizes two hands free audio microphones, the primary microphone on the driver side and a secondary/reference microphone for the front passenger side. The primary microphone is connected directly to the TCM. It is also connected by an analog pass-through circuit to the radio from the TCM. The secondary microphone is connected directly to the radio.

The primary microphone is used for emergency and OnStar® calls. During normal operating conditions it also provides Bluetooth® calls and speech recognition to the radio. The secondary microphone is used as a reference for the primary microphone for Barge-in and Passenger Interference Cancellation during speech recognition and also to enhance the driver side hands free calls. For model year 2018 and beyond the secondary microphone can also be used for front passenger hands free phone calls. Barge-in allows a user to speak over the system prompts. Passenger Interference Cancellation ignores unwanted inputs from cabin noise that is not related to the prompts given by the user.

The front passenger secondary microphone is never used as a direct source for an OnStar® call. The second microphone input modifies the primary microphone input to reduce background noise and other interference. An OnStar® call requires the microphone to be directly connected to the TCM. During a normal (non-emergency) OnStar® call the TCM receives an audio signal from the primary microphone and sends the signal to the radio via the Ethernet connection. The radio processes the OnStar® call audio and sends it back to the TCM via the Ethernet connection. During an emergency button call the TCM contacts the OnStar® call center directly and does not send the signal to the radio.

Cellular and GPS Antennas

The combination antenna will have any of the following antenna elements when equipped with OnStar®:

- Primary cellular element
- Secondary cellular element
- GPS element
- Digital radio element
- AM/FM element

The OnStar® Telematics Communication Platform (TCP) system uses 2 cellular antenna elements to send and receive cellular data, the primary cellular element and the secondary cellular element. The primary cellular signal is carried by a coax cable that connects the antenna directly to the TCM. Details of the secondary cellular signal are further described below.

The GPS antenna element is used to collect the signals of the orbiting GPS satellites. GPS signals are output from the TCM on Ethernet or CAN 5. Other modules on Ethernet may use the GPS latitude, longitude and satellite time data broadcast by the TCM. Using positioning information from the vehicle Ethernet avoids the use of a coaxial signal splitter to pass the analog GPS signal to other modules. Within the antenna is housed a low noise amplifier that allows for a more broad and precise reception of this data. Also housed within the antenna is circuitry to combine the GPS signal and the secondary cellular signal. The combination GPS/secondary cellular signal is carried by a coax cable that connects directly to the TCM. The cable also provides a path for DC current for powering the antenna.

Compass Heading

The TCM has a compass feature to calculate vehicle direction which is displayed via the instrument panel cluster or designated display. The compass heading is determined by dead reckoning until the GPS 3rd fix is established. The dead reckoning is accomplished by using the yaw rate sensors and wheel ticks to determine heading changes from a GPS known heading. The GPS 3rd fix heading is determined by the deferential of two locations.

Bluetooth®

With the OnStar® TCP system, Bluetooth® resides in the radio. Refer to Radio/Audio System Description and Operation for further details.

Phantom Phone Calls

A customer may report that the OnStar® system is attempting and/or completing phone calls which the operator of the vehicle did not initiate.

It is important to know which type of reported phantom phone call the operator is reporting. Some phone calls of this nature are considered normal and cannot be addressed other than through education, while others may require some remedial action to resolve. When attempting resolve, it is very important to determine under which circumstances the reported Phantom Phone Call resulted.

The following are different scenarios:

- The vehicle may receive an incoming call just like any other phone. Typically the customer will hear the phone ringing in the vehicle. This scenario also includes incoming Bluetooth® calls.
- Because the button assembly and associated wiring feeds voltage back to the OnStar® system based on the amount of voltage drop through each of the buttons, should the return line be partially shorted to voltage, the system could interpret this voltage as a key press. If one of the buttons voltage is simulated, such as the Blue button, the system will make a phone call just as if the button had been pressed by the operator of the vehicle. Refer to the OnStar® Button Malfunction document for diagnostics.
- Internal module fault. Some customers may report a condition where ″Phone Unavailable″ message is heard after the vehicle door is opened or key is cycled. The technician may find a DTC stored in the Telematic Control Module (example: U1500 or B1000). Refer to diagnostics for the DTC making sure to follow any applicable Bulletins or PIs.
- Unwanted Hands free calling activation. A customer may report that the ″Ready!″ or ″OnStar® Ready!″ message is heard while driving. The customer may also advise that this seems to happen mostly while making a turn. In some cases it has been found that the customer is inadvertently pressing the ″push to talk″ button on the steering wheel controls. On rare occasions, other issues in the steering column or Steering Wheel Control system may induce this event.

The majority of reported Phantom Phone Calls can be attributed to accidental button presses or customer induced concern. In some cases an incoming call may be mistaken as a phantom call concern. It is important to verify all aspects of the customer concern in order to properly duplicate and diagnose the condition. If the concern points to normal operation and customer induced concern, please communicate to the customer this condition is a normal operating characteristic of their vehicle.

Back-up Battery

In some vehicles, the telematics system is equipped with a Back-Up Battery (BUB) installed inside the TCM. This battery is a single-cell lithium-ion rechargeable battery assembly, connected with a short electrical harness, to the circuit board in the module. Contained within this single-cell battery package are a temperature-sensing thermistor, automatic-resetting circuit-overload protection, and a low-pressure vent valve. Nominal voltage of the battery pack is 3.0 - 3.4 volts.

The BUB is only switched into service when the telematics system is in normal On condition, Ignition » On / Vehicle » In Service Mode and main vehicle battery power (B+) at the TCM suddenly becomes near-zero. At this time BUB power is connected to the main circuit board power using solid-state power switching circuits. After initiating BUB for module power, the CAN 5 bus is monitored for a message confirming a collision-event, or near-collision event, has occurred. If a confirmation message is received, the TCM continues to use BUB as the power supply until it is depleted. If a confirmation message is not received within 10 seconds, the BUB power circuits are internally disconnected, preventing inadvertent dis-charge of the battery.

Charging circuitry within the TCM maintains the state of charge. The BUB charging occurs as determined by the module software, primarily based on temperature and state of charge. Battery state of charge is measured by the telematics module circuitry, and remaining energy capacity calculated by the module software. On-board diagnostic tests check for circuit faults, over-temperature conditions, and low-energy capacity. Current DTCs will set for each of these conditions. No component checks are required, and are not recommended, for BUB diagnosis.

WiFi Support

The TCM supports entertainment WiFi hotspots by providing a connection to the cellular network for internet access. The radio acts as the central WiFi router and connects hardwire Ethernet to the TCM. The TCM completes the connection to the internet through the cellular network. It has the ability to connect up to 7 devices at one time.

Audio System Interface

When the OnStar® requires audio output, a serial data message is sent to the audio system to mute all radio functions and transmit OnStar® originated audio. The OnStar® audio is transmitted to the vehicle audio system by the Ethernet and CAN 5 circuits.

The audio system will mute and an audible ring will be heard though the speakers if the vehicle receives a call with the radio ON.

On some vehicles, the HVAC blower speed may be reduced when the OnStar® system is active to aid in reducing interior noise. When the system is no longer active, the blower speed will return to its previous setting.

OnStar® Sleep Cycle

The OnStar® system uses a unique sleep cycle to allow the system to receive cellular calls while the vehicle is OFF and retained accessory power mode has ended. This cycle enables the TCM to perform remote functions, such as door unlock, as commanded over the air by the OnStar® Call Center, and to continue to maintain an acceptable level of battery electrical drain.

The OnStar® system uses 4 states of readiness, depending upon the type of cellular market the vehicle is in when the vehicle is Off:

- High power
- Low power
- Sleep
- Digital standby

The high power state is in effect whenever the vehicle is ON or in PROPULSION MODE, or retained accessory power is enabled, and the OnStar® system is sending or receiving calls or when the system is performing a remote function.

The low power state is in effect when the OnStar® system is idle with the vehicle is Ignition » On / Vehicle » In Service Mode, or with retained accessory power enabled.

The digital standby power state is entered after the vehicle has been shut off and the retained accessory power has timed out while in a digital cellular area. When in digital standby mode, the OnStar® module is able to perform all remote functions as commanded by an OnStar® advisor at any time, for a continuous 120 hours. After 120 hours, the OnStar® module will go into sleep mode until a wake up signal from the vehicle is seen by the TCM. If the OnStar® module loses the digital cellular signal it will revert to analog mode and follow the standard sleep state (9 minutes OFF, 1 minute standby) based on the time of the GPS signals, this will continue until a digital cellular signal is again received.

If the OnStar® system loses battery power while the system is in a standby or sleep mode, the system will remain OFF until battery power is restored and the vehicle is Ignition » On / Vehicle » In Service Mode.

Features

OnStar® Personal Calling

The hands free, OnStar® personal calling cellular phone feature is an additional feature of the OnStar® system. This feature is embedded within the TCM; however it must be activated by an OnStar® advisor. OnStar® personal calling operates similar to most hand held cellular phones in that the availability for its usage is based on minutes or units. The customer must have a current OnStar® subscription, as this feature cannot be utilized without it. To use OnStar® personal calling, the customer must also purchase units (minutes) as outlined in the owners guide provided with the OnStar® system. Units begin to deplete, 1 unit is equal to 1 minute, as the customer makes outbound phone calls, answers inbound phone calls, or while connected to the OnStar® virtual advisor. In addition, units may also have an expiration date, depending upon the type of units purchased.

Turn by Turn Navigation (if equipped)

Turn by Turn Navigation allows the driver to contact OnStar® to obtain directions for driving from a current location to a desired location. The Turn by Turn Navigation system stores your planned route and continually checks your position along that route, when you deviate from the planned route, the system will recognize this and prompt the driver with verbal prompts for how to proceed. .

Teletypewriter (TTY) Users

OnStar® has the ability to communicate to deaf, hard-of-hearing, or speech-impaired customers while in the vehicle. The available dealer-installed TTY system can provide in-vehicle access to all of the OnStar® services, except Virtual Advisor and OnStar® Turn-by-Turn Navigation.

Deactivated OnStar® Accounts

In the event a customer has not renewed their OnStar® account after expiration or the account was never activated, OnStar® will make a discrete cellular call to the vehicle to deactivate the OnStar® system. Before taking this action, customers are notified that the OnStar® system in their vehicle will be deactivated unless they elect to renew the account. After the OnStar® account has been deactivated, customers will experience the following:

- The OnStar® status LED will not illuminate.
- The OnStar® system will NOT attempt to connect to the OnStar® Call Center in the event of a collision or if the vehicle's front air bags deploy for any other reason.
- An emergency button press will play a demo message indicating the service has been deactivated.
- An OnStar® Call Center button press will connect the customer with a dedicated sales team who can sell an OnStar® subscription and reactivate the vehicle. Depending on the type of OnStar® hardware in the vehicle, the customer may first hear a demonstration message stating there is no current OnStar® subscription for the vehicle, and directing the customer what to do to activate services.
- OnStar® personal calling will not be available, as this feature requires the customer to have a current OnStar® account. Attempts to use this feature may result in cellular connection failure messages and the inability to connect to the number dialed.

Certain vehicles that have never had an active OnStar® account, or that have been deactivated, may be unable to establish a connection with the OnStar® Call Center. When normal published diagnostic procedures do not indicate a possible cause for the no connect concern, the vehicle may have been deactivated. For deactivated vehicles, a no connect response should be considered normal operation. Further diagnosis and subsequent repair is only necessary should the customer elect to become an active OnStar® subscriber or renew the account subscription.

OnStar® Cellular, GPS, and Diagnostic Limitations

The proper operation of the OnStar® System is dependent on several elements outside the components integrated into the vehicle. These include the National Cellular Network Infrastructure, the cellular telephone carriers within the network, and the GPS.

The cellular operation of the OnStar® system may be inhibited by factors such as the users range from an analog or digital cellular tower, the state of the cellular carrier’s equipment, and the location where the call is placed. Making an OnStar® key press in areas that lack sufficient cellular coverage or have a temporary equipment failure will result in either the inability of a call to complete with a data transfer or the complete inability to connect to the OnStar® Call Center. The OnStar® system may also experience connection issues if the identification numbers for the module, station identification number, electronic serial number or manufacturers electronic ID, are not recognized by the cellular carriers local signal receiving towers.

The satellites that orbit earth providing the OnStar® system with GPS data have almost no failures associated with them. In the event of a no GPS concern, the failure will likely lie with the inability of the system to gain GPS signals because of its location, i.e. in a parking structure, hardware failure, or being mistaken with an OnStar® call which has reached the Call Center without vehicle data.

During diagnostic testing of the OnStar® system, the technician should ensure the vehicle is located in an area that has a clear unobstructed view of the open sky, and preferably, an area where analog or digital cellular calls have been successfully placed. These areas can be found by successfully making an OnStar® keypress in a known good OnStar® equipped vehicle and confirming success with the OnStar® Call Center advisor. Such places can be used as a permanent reference for future OnStar® testing.

Mobile Identification Number and Mobile Directory Number

The TCM utilizes 2 numbers for cellular device identification, call routing and connection, a mobile identification number and a mobile directory number. The mobile identification number represents the number used by the cellular carrier for call routing purposes while the mobile directory number represents the number dialed to reach the cellular device.

Firmware Over The Air

The Firmware Over The Air feature was designed to reflash software remotely. Remote reflash is an in-vehicle feature that enables the installation of a software package to update the infotainment system without requiring service test equipment to be physically connected to the vehicle. Remote reflash will utilize a long range or short range connection from the host module to a remote IT system. There must be an active OnStar® account to receive Over The Air programming or updates. To verify the status of the account perform a blue button press and verify the account is active and connects with data and location. Customers need to accept the OnStar® terms and conditions, and must have an active OnStar® account to receive any Over The Air programming or updates.

Note: A data plan is not required to receive Over The Air programming or updates. Also the programming or updates do not consume a customers available data.

Note: Cold temperatures can cause the update to fail. Warm vehicle's interior to fix this issue.

Note: Low battery can cause the update to fail. Have battery charged before running update.

Note: Fleet vehicles must be activated as a Fleet account (not a business account) and require a separate Terms and Conditions agreement to be completed. Please see your fleet administrator for assistance with completing this agreement.

Radio/Audio System Description and Operation

The entertainment system on this vehicle may have several different configurations available to it. To determine the specific configuration of the vehicle, please see the Service Parts ID Label, and refer to [Link target (target-id 47866-) not found] .

Each item in the list below represents topics covered in detail below.

- Demo Mode
- Data Communications
- Remote Radio Receiver
- Speaker Operation
- Antenna System
- Radio Reception
- Active Noise Cancellation/Auto Volume Control (If equipped)
- Microphones
- Bluetooth ® (if equipped)
- WiFi
- Back Office Registration
- Applications (if equipped)
- Speech Recognition
- Navigation System Components and Features (if equipped)
- Locations Services
- Valet Mode
- Teen Driver
- Theft Deterrent
- Audio Amplifier (if equipped)
- Infotainment Controls and Display
- Steering Wheel Controls (If equipped)
- USB port
- OnStar ®
- OTA (Over The Air) Programming
- GAS (Google Automotive Services) if equipped
- Compass Data
- Media Disc Player (if equipped)
- Digital Rearview Camera (if equipped)

Demo Mode

The radio on new unsold vehicles received at the dealer will be in Demo Mode. In Demo Mode a phone will only stay paired for the current key cycle and lose pairing to the radio after the vehicle shuts down and restarted after 10 min. Additional operational characteristics of Demo Mode include no retention of the following:

- Stored favorites
- Last station tuned
- Bluetooth synced devices
- Volume level
- Last app or screen view
- Audio/equalizer settings

Note: If a device was originally paired while in Demo Mode, a similar condition could occur that randomly continues to drop Bluetooth pairing after exiting Demo Mode. If the vehicle is not in Demo Mode, but it is believed the device was originally paired while in Demo Mode, then delete the device from the radio, delete the radio from the device, and perform the pairing process again.

Loss of functionality on the above items may be due to the design intent of the vehicle while in Demo Mode, no correction is needed for these conditions. This is the normal operating characteristic of the Demo Mode of the vehicle. Once the vehicle is sold, select the option labeled "Not a Demo Vehicle" to exit Demo Mode.

Data Communications

The infotainment system communicates with other devices on multiple serial data networks during operation.

Ethernet AVB

At the core of the infotainment system is the Radio Ethernet AVB (Audio Video Bridging) switch, which communicates directly to each contributing Infotainment module terminator. The Ethernet harness consists of twisted pair wires from point to point. Each module on the Ethernet infotainment system sends/receives data at 100 megabit per second (Mbps) to/from a specified port at the Radio. Some system configurations support a 1 Gigabit per second (Gbps) connection at the Radio to/from the TCP (Telematics) module. The Radio/Ethernet will also be used to program USB S/W update files to the modules connected to the Ethernet ports. Some of the data services performed over Ethernet AVB include: Chime, Service Programming via Over-The-Air updates, OnStar Turn-by-Turn directions and all other OnStar data services.

Local Interconnect Network (LIN)

The Local Interconnect Network (LIN) Bus is a single wire communication system. This bus is used to exchange information between a master control module and other smart devices which provide supporting functionality.

The Remote Radio Receiver, Information Display, Infotainment Controls and the Multifunction (tunnel) Controls all communicate on the LIN bus.

Controller Area Network (CAN)

The Radio will communicate with other modules and systems in the vehicle via CAN and CAN5. Diagnostic Trouble Codes will be read on CAN/CAN5 to diagnose Ethernet, LIN and system faults. CAN will also be used for programming calibrations using Tech Line Connect (TLC)/SPS. CAN takes the place of GMLAN on Global-B architecture systems. CAN5 is a sub-system of the entire CAN network on a vehicle and is the specific network that connects the Infotainment modules on the vehicle.

For additional information refer to *Data Link Communications Description and Operation 6-32*

Automotive Audio Bus (A2B)

The Automotive Audio Bus (A2B) uses a radio and one or more nodes. It is a private, digital, and high speed serial bus. The system contains a master (radio) and one or more nodes connected by an unshielded twisted pair (UTP) wiring harness. Diagnostic Trouble Codes (DTCs) are set within the master node for all errors in the system, if the bus is up and communicating. The system operates on full duplex, where communication is possible over a single wire if the other wire is damaged or open. The network is daisy chained. A and B ports are isolated by the A2B transceiver. The A2B bus line doesn't require any terminator. The last device is configured as end node by the A2B master processor during the network discovery process.

Remote Radio Receiver

Overview

The Radio is the Ethernet master. The radio also communicates with other components and systems within the vehicle via CAN/CAN5 and LIN. The remote radio receiver communicates with the info display module via the LIN bus for control information, touch communications and dimming level. Digital video data is sent to the display through a dedicated video cable.

The Radio receiver contains internal antennas for Bluetooth® and WiFi. The Radio also has an external WiFi antenna (on applicable systems) that is used to receive local WiFi signals at increased distances. This is mainly used to support Over-the-Air updates.The Radio must be mounted properly to obtain proper wireless signals and GPS position. The remote radio receiver is responsible for receiving all broadcast audio bands. Broadcast signals from AM, FM, XM and DAB bands are transmitted to the radio via the vehicle antenna systems. The remote radio receiver is also responsible for the following: Video for the infotainment display, Bluetooth®, USB, memory card reader, and speech recognition functions.

The Radio has phone projection capabilities that can transmits information directly to the vehicle infotainment system through Bluetooth or a USB connection. Downloadable applications will be available based on distracted driver safety requirements.

Radio Power

The radio receives battery power and ground from the vehicle harness.

The radio does not use a discrete ignition feed circuit for power moding. The power mode master provides the system power mode to the radio via serial data messages. The power mode master determines the system power mode by processing power mode information from ignition switch inputs. Serial data power modes supported by the radio are OFF, ACCESSORY, RUN, and CRANK REQUEST.

The radio can be turned ON with the ignition OFF. After 10 minutes of inactivity the radio will power down. If any setting (e.g. changing the station) or volume has been changed or if the radio has been powered OFF than back ON the 10 minute timer will reset from that point.

Radio Audio Outputs
When not equipped with an amplifier, the radio outputs all audio signals to the speakers via the vehicle wiring harness.

When equipped with an amplifier, the radio outputs all audio signals digitally over Ethernet.

Speaker Operation

Speakers turn electrical energy into mechanical energy to move air, using a permanent magnet and an electromagnet. The electromagnet is energized when the radio or amplifier (if equipped) delivers current to the voice coil on the speaker. The voice coil will form a north and south pole that will cause the voice coil and the speaker cone to move in relation to the permanent magnet. The current delivered to the speaker is rapidly changing alternating current (A/C). This causes the speaker cone to move in two directions producing sound.

Antenna System

Multi-Band Antenna
The multi-band antenna is located on the roof of the vehicle. This type of antenna may be used with the AM/FM radio, but is primarily for cellular, GPS signals, and XM, if the vehicle has these features. Keep this antenna clear of snow and ice for clear reception. If the vehicle has a sunroof, the performance of the system may be affected if the sunroof is open. Loading items onto the roof of the vehicle can interfere with the performance of the system, ensure the multi-band antenna is not obstructed.

Diversity Antenna
The diversity antenna system can use up to 2 antenna amplifiers and an AM/FM element that is part of the rear end spoiler assembly or applied as appliqués to the rear glass. With 2 antennas the right antenna 1 receives both AM and FM signals, while the left antenna 2 may receive FM and DAB signals only. The antenna amplifier receives the signals from the rear end spoiler antenna element or from the glass antenna element. Each antenna amplifier is connected to the radio by a coaxial cable.

The radio antenna amplifier is enabled when the radio is turned on. The radio provides battery voltage to the antenna amplifier using the center conductor of the antenna coaxial cable. When a 12 V signal is seen by the amplifier on the center conductor of the antenna coax, the received signals are amplified.

With a 2 antenna amplifier system when the AM band is selected on the radio, the antenna 1 amplifier connects the AM antenna to the radio. When the FM band is selected, both antenna amplifiers provide FM signals to the radio. The radio switches between the two FM antennas, monitoring the signal strength and combines the signals to create one stronger signal.

Global Positioning System (GPS) Antenna
The global positioning system (GPS) antenna is part of the multi-band antenna located on the roof of the vehicle. The GPS antenna is used to collect the signals of the orbiting GPS satellites. Within the antenna is housed a low noise amplifier that allows for a more broad and precise reception of this data. The GPS antenna amplifier is powered through the coaxial cable.

The GPS antenna is connected to the telematics communication interface control module via a coax cable. The GPS signal is sent to the navigation radio via an Ethernet harness.

External WiFi Antenna
On some system configurations, an external WiFi antenna is connected to the radio to support longer range reception, compared to the internal Wifi antenna. Over-the-air updates is the main feature supported by this antenna. Data transfers used for consumer media will also be supported by this antenna when connected to a local network. The antenna is connected to the radio via coaxial cable.

Radio Reception

AM/FM Radio Signal
The radio signal is sent from a broadcast station and is then received by an antenna. The strength of the signal received depends on the following:

- The power output (wattage) of the broadcasting station
- The location of the vehicle (or receiver) relative to the broadcast tower.
- Height of the broadcast antenna
- Height of the receiving antenna
- Obstacles between the tower and the receiver
- Atmospheric conditions
- What band (AM or FM) the station is broadcasting
- Type of antenna and the ground plane

Sirius XM (SXM) Digital Radio Receiver (If equipped)
A service fee is required in order to receive the XM service.

The XM satellite receiver is integrated into the radio. XM satellite radio provides digital radio reception. The XM signal is broadcast from two satellites and, where necessary, terrestrial repeaters. The high power satellites allow the antenna to receive the XM signal even when foliage and other partial obstructions block the antennas view of the satellite. Terrestrial repeaters are used in dense urban areas. These repeaters will receive the satellite signal and re-broadcast them at

much higher power levels in order to ensure reception in areas with densely packed tall buildings. Even with repeaters the signal can be compromised resulting in loss of XM.

SiriusXM 360L
SiriusXM with 360L interface has enhanced in-vehicle listening experience for subscribers. The experience now offers more categories and system learned recommendations toward discovering more personalized content.

To use the full SiriusXM 360L program, including streaming content and listening recommendations, OnStar Connected Access is required. Connected vehicle services vary by model and require a complete working electrical system, cell reception, and GPS signal. An active OnStar connected plan is required, if the customer declines OnStar Terms and Conditions the following message can be displayed: Connection Unavailable, Please call OnStar Agent.

Reference the SiriusXM user guide for use and subscription information.

SiriusXM Tune Start
SiriusXM Tune Start is a feature that begins playing the current song from the beginning when you tune to a SiriusXM music channel in the stored Favorites. This feature can be enabled/disabled through the radio Settings menu.

When equipped, Tune Start works with most SiriusXM music channels when the channel has been saved as a Favorite in the radio. The SiriusXM app in the radio also has a list of Favorites. Saving a SiriusXM music channel as a Favorite automatically saves it in the hidden SiriusXM Favorites list. If a SiriusXM music channel is not working in Tune Start ensure the channel exists in the SiriusXM Favorites list. SiriusXM Favorites can be found in the SiriusXM Settings menu under Listener Options. Note that SiriusXM channels stored by default in new vehicles are not stored in the SiriusXM Favorites list. These channels would need to be stored as Favorites by the user for them to appear in the Sirius XM Favorites list. The radio may require a sleep cycle before Tune Start will begin to function on newly saved Favorites. Tune Start will only begin to record SiriusXM Favorites with the Ignition On, so some buffering time is required before Tune Start can function after the vehicle is started.

Tune Start is a SiriusXM feature. Reference the SiriusXM user guide, or contact SiriusXM for use and subscription information.

High Definition (HD) Radio (If equipped)
HD Radio delivers subscription free local broadcasting in a digital format which may include song title, artist name, album art, weather, traffic data, etc., on AM/FM bands. Up to four stations could be available on a single frequency for e.g. if radio station is 96.9 FM, the HD enabled radio would have additional broadcasts on 96.9 HD1, HD2, HD3 and HD4. The digital technology allows for clear reception quality and additional information.

Active Noise Cancellation/Auto Volume Control (If equipped)

Active Noise Cancellation (or sometimes referred to as Auto Volume Control) may have several different configurations. To determine the specific configuration of the vehicle, please see the Service Parts ID Label, and refer to [Link target (target-id 47866-) not found] .

The main components of the Active Noise Cancellation system are:

- Microphones in the vehicle headliner. Use schematics to determine the number of microphones in each vehicle.
- An engine speed (RPM) signal from the engine control module to the amplifier/active noise cancellation module/radio.
- Active Noise Cancellation electronics and software integrated into the audio amplifier/active noise cancellation module/radio.
- The vehicle speaker system, connected to the amplifier/active noise cancellation module/radio, to output the desired cancellation frequencies.

The Active Noise Cancellation system is operational under the following conditions:

- The amplifier/active noise cancellation module/radio has passed all self diagnostic checks.
- All doors are closed.
- Battery voltage is between 9.5 V and 16 V.
- The vehicle cabin temperature is less than 140°F (60°C).
- For internal combustion engines- Engine speed is between 550 and 3000 RPM

The Active Noise Cancellation/Auto Volume Control system is a method used to reduce the perception of certain undesirable sounds generated by the engine into the vehicle cabin. The systems uses microphone and engine speed signals, software integrated into the amplifier/active noise cancellation module/radio, and the vehicle speakers to determine and generate the correct frequencies needed to achieve the desired reduction.

The microphones are located in the headliner to monitor noise/sounds in the vehicle cabin, and are directly connected to the amplifier/active noise cancellation module/radio. For internal combustion engines the amplifier/active noise cancellation module/radio also receives an engine speed (RPM) signal from the engine control module. The amplifier/active noise cancellation module/radio processes these inputs to determine the frequency of the undesirable sound. The amplifier/active noise cancellation module/radio then calculates the appropriate cancellation frequency and outputs a cancellation signal (audio tone) to the vehicle speakers to reduce the perception of undesirable sounds by the vehicle occupants so the vehicle cabin appears quieter and without vibration.

Microphones

There are two different microphone systems depending on the vehicle. The first system is the traditional analog two wire discrete circuits wired directly to the OnStar module or the radio depending on options. The second system uses microphone arrays and amplifier referred to as nodes that operate in tandem. The system typically uses six circuits also utilizing the two wire discrete analog circuits along with input and output of the Automotive Audio Bus (A2B) Serial Data 1 digital circuits.

First Microphone System

This system utilizes two hands free audio microphones, the primary microphone on the driver side and a secondary/reference microphone for the front passenger side. The primary microphone is connected directly to the Telematics Control Module. It is also connected by an analog pass-through circuit to the radio from the Telematics Control Module. Without OnStar the primary microphone is connected directly to the radio. The secondary microphone is always connected directly to the radio.

The primary microphone is used for emergency and OnStar calls. During normal operating conditions it also provides Bluetooth calls and speech recognition to the radio. The secondary microphone is used as a reference for the primary microphone for Barge-in and Passenger Interference Cancellation during speech recognition and also to enhance the driver side hands free calls. The secondary microphone can also be used for front passenger hands free phone calls. Barge-in allows a user to speak over the system prompts. Passenger Interference Cancellation ignores unwanted inputs from cabin noise that is not related to the prompts given by the user.

The front passenger secondary microphone is never used as a direct source for an OnStar call. The second microphone input modifies the primary microphone input to reduce background noise and other interference. An OnStar call requires the microphone to be directly connected to the Telematics Control Module. During a normal (non-emergency) OnStar call the Telematics Control Module receives an audio signal from the primary microphone and sends the signal to the radio via the Ethernet connection. The radio processes the OnStar call audio and sends it back to the Telematics Control Module via the Ethernet connection. During an emergency button call the Telematics Control Module contacts the OnStar call center directly and does not send the signal to the radio.

Second Microphone System

The microphone array system uses a master which is the radio and any number of microphones or amplifiers referred to as nodes. The nodes are connected to the master via the Automotive Audio Bus (A2B) Serial Data 1 circuits. The microphone array system also utilizes the traditional 2 wire analog discrete signal circuits wired to the OnStar module or the radio. These analog circuits are only used as a backup for emergency OnStar calls if the A2B 1 is down. The primary microphone uses a digital signal operating on the A2B serial data 1 circuits. The nodes will have a + and – A2B 1 input and a + and – A2B 1 output, except for the end node which only has a + and – A2B 1 input.

Bluetooth® (If equipped)

Bluetooth® wireless technology is a short-range communications technology intended to replace the cables connecting portable and/or fixed devices while maintaining high levels of security. The operating range of the signal is approximately 30 feet.

The available features and functions are determined by the type of device and the software within the devices being used. For a feature or function to operate, it must be supported in both devices.

The first connection between devices is established through a process called pairing. In order to pair two devices, a password (passkey) has to be exchanged between the two devices. One device will generate the password, the other device accepts the password to complete the process. Once the devices are paired, future connections between the devices will occur automatically when the devices are on and within range of each other.

The Bluetooth® hardware is internal to the Remote Radio Receiver. The antenna is internal to the Remote Radio Receiver. The Remote Radio Receiver supports streaming of data (music, voice, information) from cellular phones and other mobile devices that support those features. The Remote Radio Receiver is also capable of interfacing with cellular phones for hands-free features.

- The device must be paired to the system to use the available Bluetooth® feature(s). The pairing process must only be performed once for each device, unless that device's information is deleted.
- Depending on model year up to 10 devices can be paired, refer to owners manual for details.
- Streaming Audio allows playing music from the mobile device wirelessly. Music stored on the mobile device can be viewed and controlled from the display.
- To stream audio from a mobile device, the device must be unlocked, and any additional applications should be closed.

Refer to the owners manual, supplements, and the device manufacturers information for pairing instructions.

WiFi

The WiFi hardware is internal to the Remote Radio Receiver. The WiFi or WLAN antenna is called the Wireless Communication Antenna which is connected to the Remote Radio Receiver. WiFi expands the abilities of the vehicle as described below:

- Connect to home WiFi to update software.
- When used with OnStar 4G LTE HotSpot service, it provides internet access to devices in the vehicle when connected to the HotSpot. This requires the purchase of OnStar WiFi data plan.
- Enables in-vehicle networking between passengers' devices, like home WiFi network.
- Allows remote access to external connected device application data for vehicle internet application use.

Back Office Registration

The Radio must be registered with the GM Back Office in order to receive downloaded information such as approved applications, module software updates, weather and traffic information for current location. The vehicle must have a Cellular or WiFi connection to complete the initial registration process. This process will verify the assembly plant factory feed data from the BCM, CGM and Radio serial numbers to the VIN and if the security checks are met, then the user must complete the registration process by entering email and required personal information. The registration status can be verified through the Radio "Setting – About selection.

When any of these secured ECU's are replaced, a new serial number will be recorded during the service calibration process and appended to the vehicles history data for uninterrupted back office connection.

If the Radio is replaced, the user can recover settings/applications by reregistering the email account. During the initial registration process the user will enter an email/password. The user will then be sent a follow up verification email link to setup the account completely. If the complete account setup is not performed the password reset security questions will not be entered, which will prevent reregistering this email account in the future if the password is forgotten. The radio will operate in Demo Mode or as Guest until a user profile has been set up.

Applications (If equipped)

Note: For vehicles equipped with Google Automotive Services (GAS) refer to that section below.

When the system is equipped with Bluetooth® or WiFI, the system is capable of using applications, commonly referred to as apps.

The term application refers to any piece of software that works on a system (hardware) that is being operated by it's own software. Applications are typically small software programs which uses the hardware to perform a specific task, as opposed to operating the entire system.

- For an application to be used, it must be installed on both the vehicle infotainment system and a compatible mobile device.
- The device must be connected to the system. this may be done wirelessly via Bluetooth®, WiFi, or via the vehicle USB port. Refer to the device manufacturers information for the proper connection method.
- When the device is connected, the vehicle infotainment system is used to remotely access and control the application on the mobile device.

- The application must work correctly on the device to work with the vehicle infotainment system.
- The user may be required to log-in to the application on the mobile device before using the application from the vehicle controls.
- Using applications will use the device's data plan.
- The device must be unlocked, and any additional applications should be closed.

Refer to the owners manual and supplements for information on mobile devices, control, and operation.

Speech Recognition

The Speech Recognition feature is implemented only in a Mid/High System Radio- CSM module. There is no Speech Recognition in a Low System. Speech Recognition allows the user to command various features of the radio via voice commands. For addition information refer to the owners manual. For model year 2018 (and forward) Mid/High systems, part of the speech recognition functionality is controlled via off-board cloud connection. A speech icon in the radio allows user to see if an utterance has been received by the off-board cloud. Points-of-interest (POIs) data are also stored off-board. Any disruption in the connection to the cloud will cause a partial loss of functionality for these systems.

For model year 2018 (and forward) there will also be a new speech recognition feature called Barge-in. This allows the user to speak over the voice prompts generated by the system. This feature is turned off by default from the factory and must be enabled by the user.

Navigation System Components and Features (if equipped)

There navigation system uses the Google Maps app which is a subscription based service (depending on available options).

The navigation system provides the following:

- A global positioning system (GPS) signal, which provides the vehicle location information.
- Map data for navigation and map route guidance.
- Route guidance with verbal prompts to the operator.
- Traffic and weather information for display on the navigation system map (with active subscription, where available).

GPS signals are an output from the telematics communication interface control module on Ethernet. Other modules on Ethernet, such as the radio may use the GPS latitude, longitude and satellite time data broadcast by the telematics communication interface control module.

Route Guidance
The map will display the route to the selected destination. Voice prompts alert the operator of upcoming events (turns) and arrivals at the destination. The navigation system will automatically recalculate if the route is not followed. The remote radio receiver uses data received from the global positioning system (GPS) satellites, the vehicle speed signal, and serial data information to accurately display the current position of the vehicle.

Points of Interest
The map database provides point of interest information. Points of interests are locations that are frequently visited. Points of interest can be can be displayed on the map or set as a destination. The following are some of the available Points of interests:

- Gas Station
- Restaurant
- College
- Police Station

Locations Services

"Locations Services Off" also referred to as Location Masking, is a feature in select 2019 and beyond Infotainment 3 systems that allows customers to enable or disable location services in their vehicle. This allows customers to control what data is being sent from their vehicle, and has important implications for other connected services.

The default setting is "Locations Services On", however, customers can enable or disable Locations Masking in two ways:

1. Press and hold the white button next to the blue OnStar® button in the overhead console.
2. In the Setting menu, select System>Privacy>Location Services>ON or OFF.

- Look for the white LOCATIONS SERVICES icon in the status bar on the Home Screen, next to the clock and outside temperature in the lower right corner of the screen.
- When Locations Services are On, there will be no circle around the icon.
- When the Locations Services are Off, the icon will be circled in red.

Certain functions that require the vehicle's location may not operate properly when Location Services are Off, including:

- Connected Navigation services, if equipped and active, will not work (the system will operate as a non-connected Navigation system).
- Speech recognition may not offer full functionality.

- OnStar advisors will be unable to provide Turn-by-Turn Navigation services.
- Customers may receive error messages in their myChevrolet, myBuick, myGMC, or myCadillac mobile app when trying to use Vehicle Locate.
- Some features of Smart Driver may be inoperable or not work properly, including the score being replaced by dashes.

Note: Emergency services, such as Automatic Crash Notification and Stolen Vehicle Assistance, are NOT impacted by Location Masking.

Valet Mode (If equipped)

Valet Mode is a customer enabled feature of the infotainment system, found in the settings menu, if equipped. The customer creates and inputs a four digit code using the infotainment controls. Confirming the code and selecting LOCK will lock the infotainment system, steering wheel controls and other vehicle features, dependent on vehicle equipment. The vehicle will remain in valet mode until the same four digit code is re-entered.

In the event that the four digit code is forgotten, it can be reset with the scan tool under BCM.

Teen Driver

The teen driver feature puts the vehicle into a mode that can only be unlocked with a valid PIN. It allows various restrictive features for safer driving. Some of the features include Speed Limiter, Speed Warning, Register Key, Report Card, etc. For additional information refer to owners manual.

In the event that the four digit code is forgotten, it can be reset with the scan tool under BCM.

Theft Deterrent

The radio theft deterrent system is intended to disable or limit radio functionality if incorrect vehicle information is received by the radio. The radio disables functionality if the VIN information received by the radio does not match the VIN information that has been learned by the radio. The radio receives this information via serial data. A possible cause of incorrect VIN info could be the radio was originally installed in another vehicle.

The radio has the following theft operating modes as part of the theft deterrent system:

- Normal Mode: The radio has learned a correct VIN sequence and the VIN information received via serial data matches the learned VIN sequence. In this mode the radio has full functionality.
- No VIN Mode: The radio has not received or learned a correct VIN sequence. In this mode the radio has limited functionality.
- Theft Detected Mode: The radio has learned a correct VIN sequence and the VIN information received via serial data does NOT match the learned VIN sequence. In this mode the radio may be disabled or have limited functionality. The radio display will indicate that theft protection is active.

Audio Amplifier (If equipped)

Amplifier Interface

A fused battery voltage circuit provides the main amplifier power. The audio amplifier (when equipped) is a participant on the Ethernet bus. The audio amplifier receives audio signals and control information from the Radio. The Amplifier receives battery power and ground from the vehicle harness.

Amplifier Operation

The purpose of the amplifier is to increase the power of a voltage or current signal. The output signal of an amplifier may consist of the same frequencies as the input signal or it may consist of only a portion of the frequencies as in the case of a subwoofer or midrange speaker. The audio amplifier amplifies the signal and sends it to the appropriate speakers.

Each of the audio output channel circuits (+) and (−), at the audio amplifier have a DC bias voltage that is approximately one half of the battery voltage. When using a DMM, each of the audio output channel circuits will measure approximately 6.5V DC. The audio being played on the system is produced by a varying AC voltage that is centered around the DC bias voltage on the same circuit. The AC voltage is what causes the speaker cone to move and produce sound. Both the DC bias voltage and the AC voltage signals are needed for the audio system to properly produce sound.

The audio amplifier is also responsible for operation of active noise cancellation if equipped. Refer to Active Noise Cancellation Description and Operation for more information.

Infotainment Controls and Display

The infotainment display and controls are a separate component from the radio, combined into an assembly. The assembly contains the control knobs and buttons for all audio and HVAC functions and the information display. The assembly is supplied battery voltage and ground from the vehicle harness.

Control information, touch communications and dimming level for the display are communicated via a Low Speed serial data circuit or LVDS cable to the Radio.

The remote radio receiver sends the display digital video data for on-screen display through a dedicated video cable.

The information display provides a feedback on the touch screen and certain controls.

The controls communicate via a Low Speed serial data circuit or LVDS cable with the remote radio receiver . Messages communicated include the following:

- Wake-up/power state messages
- Diagnostic information
- Button presses/knob rotations
- Commands for the state of indicators
- Back-lighting dimming level

Steering Wheel Controls (If equipped)

Some audio functions are available using the steering wheel controls. The steering wheel controls duplicate the function of the primary controls available on the radio.

For additional information on steering wheel controls, refer to Steering Wheel Controls Description and Operation.

USB Port

The USB hub device interfaces directly with the remote radio receiver via a standard USB cable. A Mini type USB connector is used to connect the cable at the USB port and at the remote radio receiver and at the auxiliary input receptacle. Standard USB male to female connections are typically used for connecting USB cables together where an in-line connection is required. An in-line cable connection is typically found between the console and I/P harness.

USB Port

The USB port allows connectivity to the infotainment system from portable media players or a USB storage device (memory stick/ flash drive). When a device is connected to the USB port, the device can be controlled from the radio controls.

Not all portable media player devices or file types are compatible. Connection to USB HUB devices is not supported.

Refer to the owner's manual for information on USB devices, control, and operation.

OnStar ® (If equipped)

When OnStar is activated, a serial data message is sent to the radio that activates default audio settings. The fade will be set to the front, Bass and Treble are set to the mid range, the outputs are mono, when the audio source is OnStar. OnStar takes priority over any other audio source.

For additional OnStar information, refer to OnStar Description and Operation.

Over The Air Programming

The Over The Air Programming feature was designed to reflash software remotely. Remote reflash is an in-vehicle feature that enables the installation of a software package to update the infotainment system without requiring service test equipment to be physically connected to the vehicle. Remote reflash will utilize a long range or short range connection from the host module to a remote IT system. There must be an active OnStar account to receive Over The Air programming or updates. To verify the status of the account perform a blue button press and verify the account is active and connects with data and location. Customers need to accept the OnStar terms and conditions, and must have an active OnStar account to receive any Over The Air programming or updates.

Note: A data plan is not required to receive Over The Air programming or updates. Also the programming or updates do not consume a customers available data.

Note: Fleet vehicles must be activated as a Fleet account (not a business account) and require a separate Terms and Conditions agreement to be completed. Please see your fleet administrator for assistance with completing this agreement.

GAS (Google Assistant Services) if equipped

Some of the GAS features are:

- Maps – Benchmark maps, navigation, traffic and point of interest data and legal speed limit sign information.
- Assistant – Voice assistant cloud services with vehicle integration (e.g., radio, HVAC).
- Play Store – Access to favorite media streaming apps plus first party GM apps.
- Keyguard – similar to a code to unlock your cell phone. When this feature is enabled a customer created lock (pattern, PIN or password) will need to be entered to unlock the radio at every ignition cycle. When the radio is locked SPS diagnostics will be unavailable. To utilize SPS diagnostics when the radio is locked enter the "Guest Mode" feature.

A connectivity package needs to be purchased to have the full experience. Refer to the Owner Manual for further information on Google Automotive Services.

Compass Data

With the Base Radio the Telematics Control module provides compass and GPS position information on the Info-CAN bus when it is present.

In a Mid / High Radio System configuration without a Telematics Control Module and equipped with GPS, the radio shall provide the GPS and heading information on Info-CAN as shown below.

An external Remote Compass Module (RCM) is required to transmit the heading and position information on Info-CAN if either:

- The Base Radio is present in a system configuration with no Telematics control module.
- The radio variant without GPS is present in a system configuration with no Telematics control module.

Media Disc Player (if equipped)

The Remote Media Player feature sends information through a USB connection to the Rear Seat Infotainment and outputs digital audio/video to vehicle displays and to the Radio over the Ethernet bus. The Rear Seat Infotainment system also has a USB hub with an auxiliary port for digital media file access.

The media disc player receives battery power and ground from the vehicle harness.

Digital Rearview Camera (if equipped)

The digital rearview camera is a direct input to the radio via coaxial cable. Camera and image activation are driven by reverse gear signal from the reverse lamp input. This function is used for reverse guidance. For radio systems that manage the camera signal, the system does not have video bypass module, as this functionality is managed onboard the radio.

Displays and Gauges

Schematic and Routing Diagrams

Instrument Cluster Schematics (Instrument Cluster and Indicators)

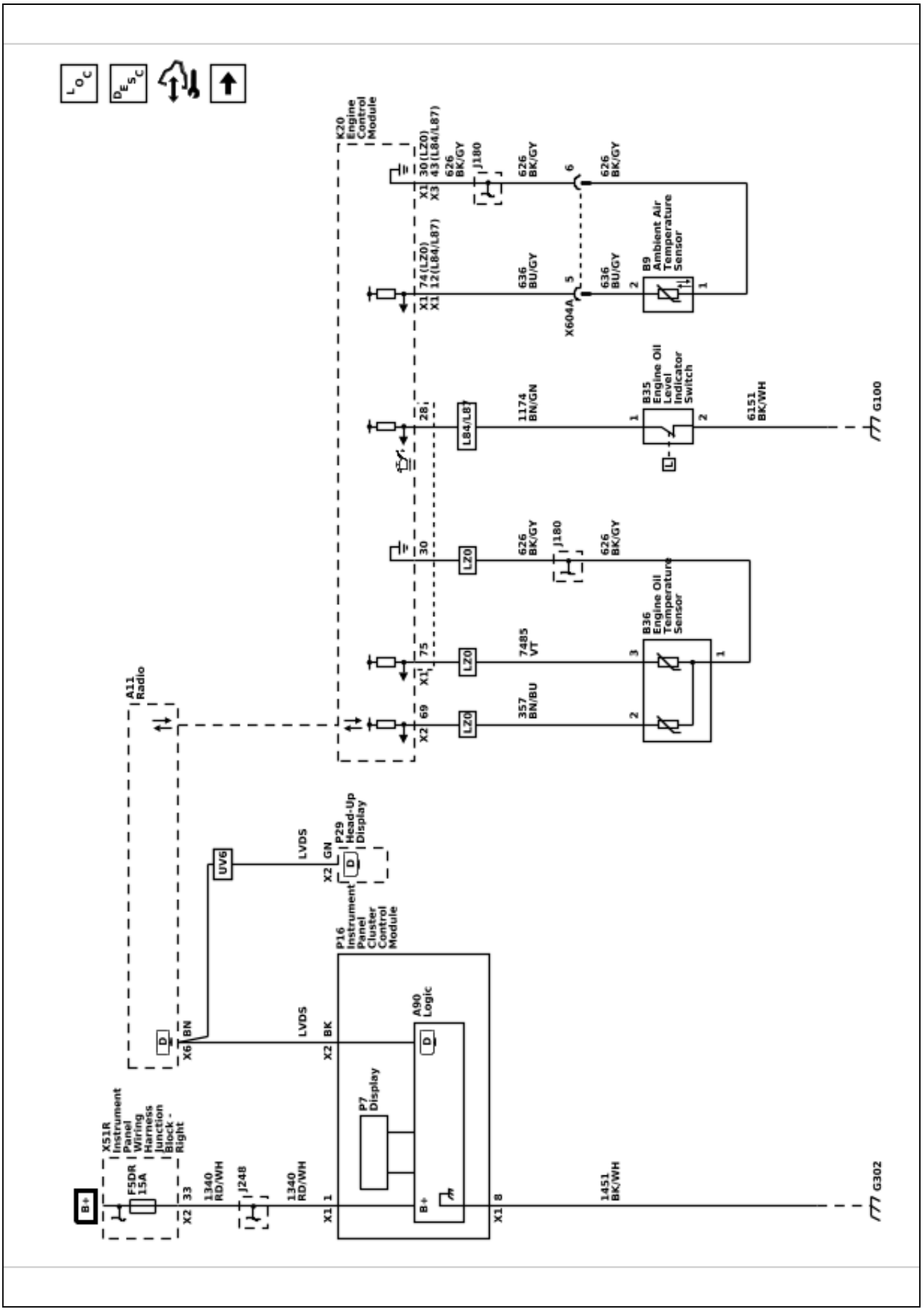

Instrument Cluster Schematics (Gauges)

6613345

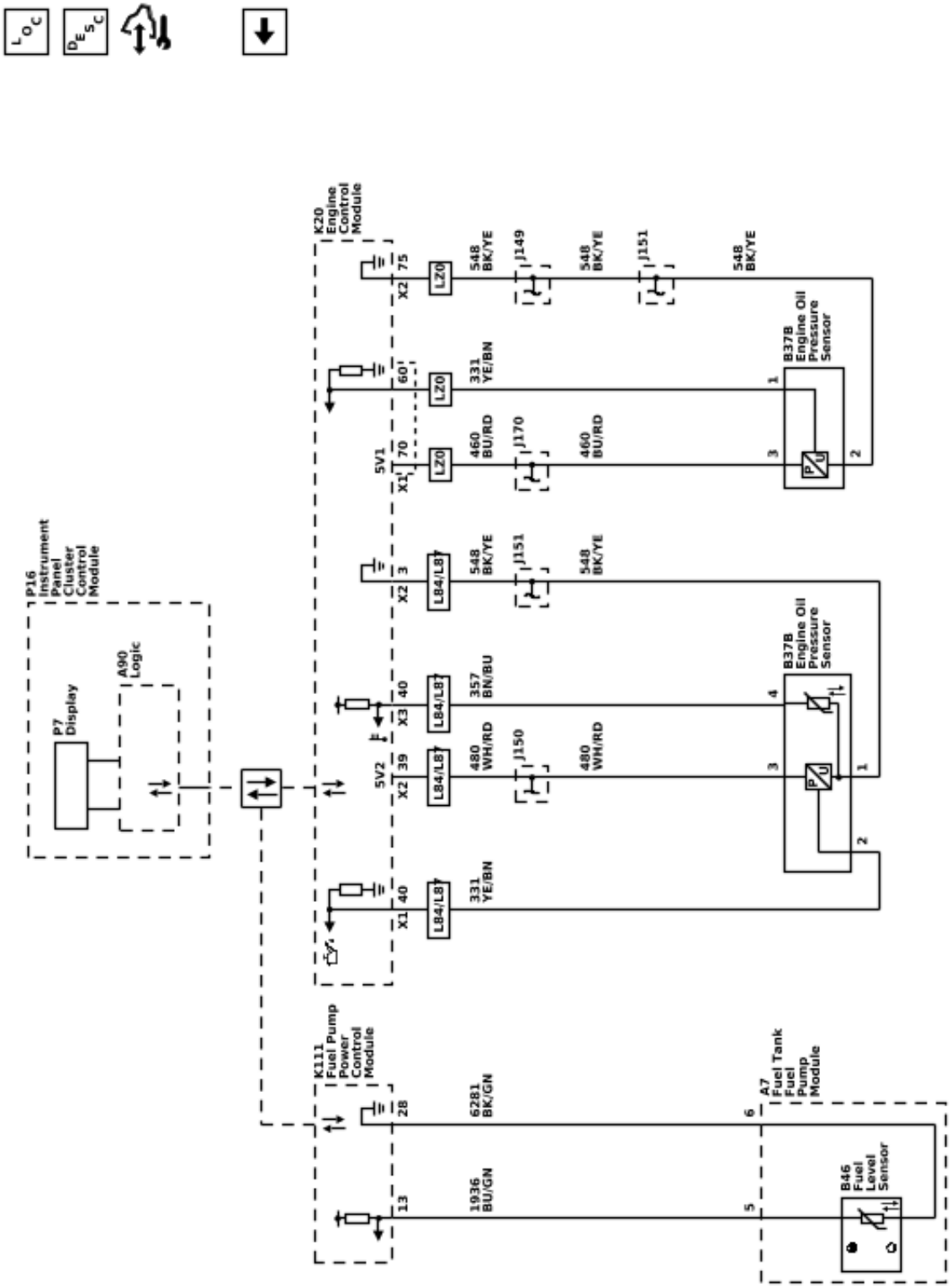

Head-Up Display Schematics (Head-Up Display (UV6))

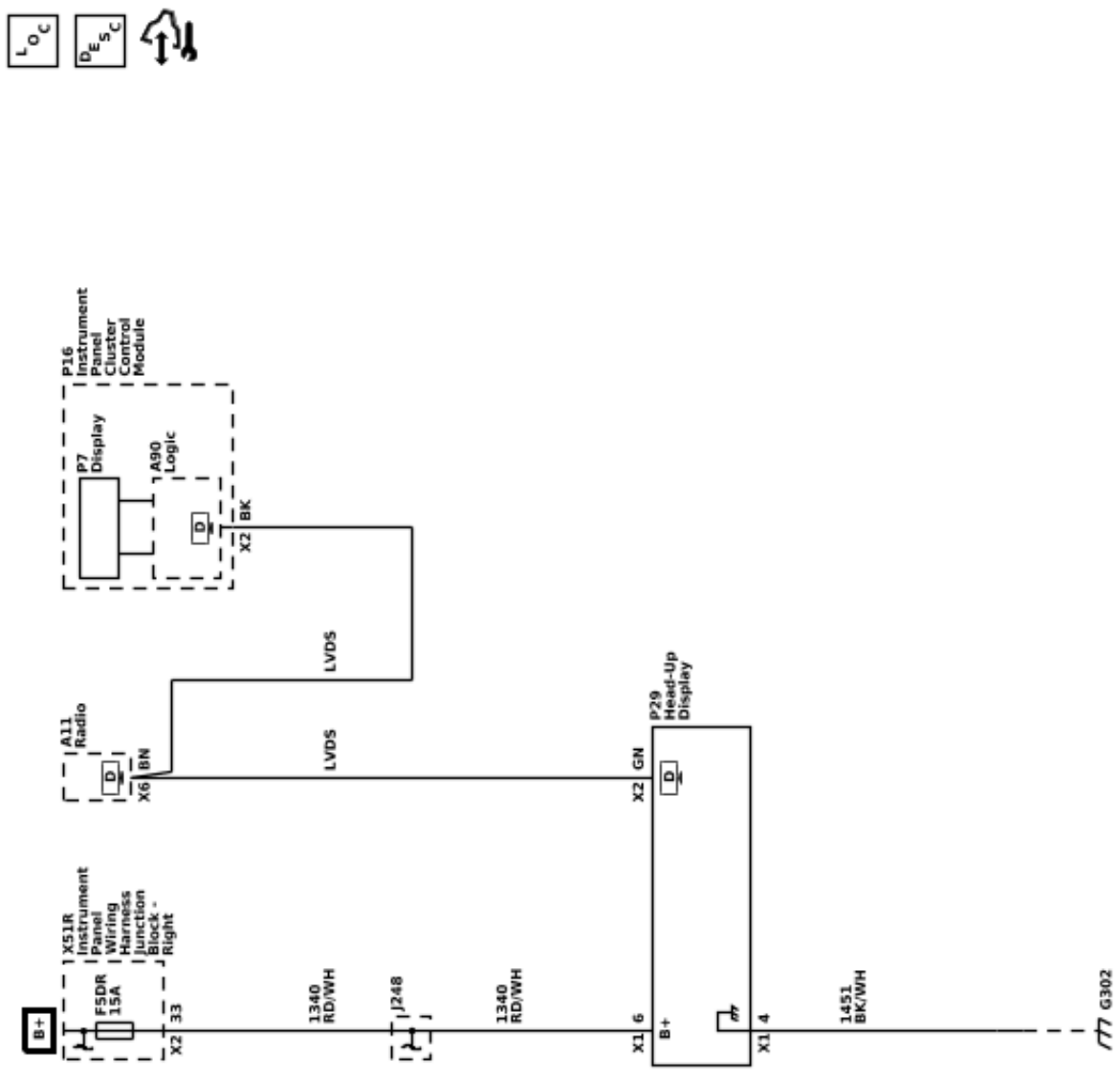

6613348

6613349

Audible Warnings Schematics (Audible Warnings)

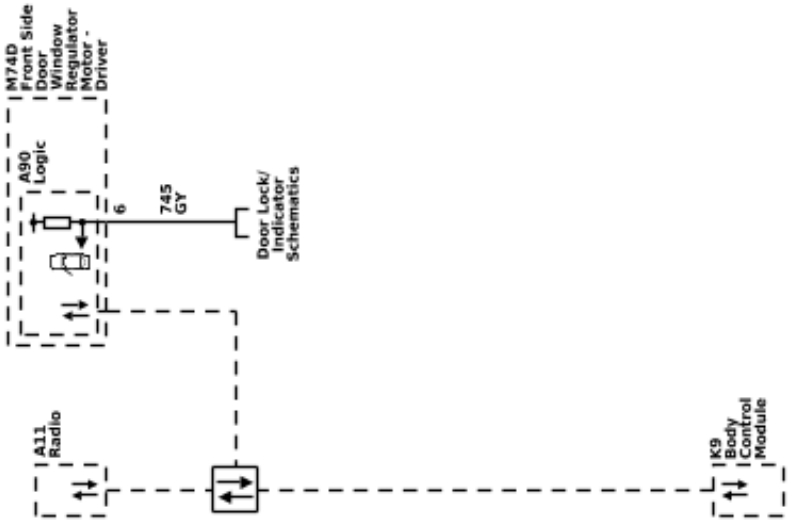

Description and Operation

Audible Warnings Description and Operation

The audible warnings alert the driver of a system concern or a critical vehicle condition. The radio generates the audible warnings through the speakers. The radio receives audible warning requests via the serial data circuit. If the radio receives multiple audible warning requests, the warning with the highest priority sounds first. On vehicles without a radio, a chime module generates the audible warnings and receives audible warning requests via the serial data circuit. Either the radio or the chime module is the chime producer. The following lists the audible warning sounds:

1. Single pulse gong
2. Multiple pulse gong
3. Single pulse beep
4. Multiple pulse beep
5. Click
6. Clack

Auto Stop Mode

The chime producer activates when the vehicle comes to a stop and the driver or passenger door is opened as requested by the body control module.

Fasten Safety Belt Warning

The chime producer activates the fasten safety belt audible warning as requested by the body control module (BCM). The BCM sends a serial data message to the chime producer indicating the chime as a multiple gong. The fasten safety belt warning sounds and the fasten safety belt indicator illuminates when the following occurs:

- The ignition switch transitions to ON.
- The inflatable restraint sensing and diagnostic module (SDM) detects that the drivers seat belt is not buckled and the signal is low. The SDM sends a serial data message to the BCM indicating the seat belt status. The instrument cluster receives a serial data message from the BCM indicating the driver seat belt status.

If the seat belt is buckled when the ignition is turned ON, the chime does not sound. If the seat belt is buckled while the chime is sounding, the chime stops. If the seat belt is unbuckled after the initial transition to ON, the chime does not sound.

Lights On Warning

The chime producer activates the lights on warning as requested by the BCM. The BCM sends a serial data message to the chime producer indicating the chime as a multiple gong. The lights on warning sounds when the following occurs:

- The ignition is OFF.
- The BCM determines that the driver door is open and the signal circuit is low.
- The BCM determines that the headlamp switch is in the park or head position.

Brake Warning

The chime producer activates the brake audible warning as requested by multiple control modules. The BCM, electronic brake control module or the parking brake control module sends a serial data message to the chime producer indicating the chime as a multiple gong. The brake warning sounds and the BRAKE indicator illuminates when the following occurs:

- The ignition is ON.
- The vehicle speed is greater than 8 km/h (4.9 mph). The instrument cluster receives a serial data message from the Battery Energy Control Module indicating the vehicle speed.
- The BCM determines that the parking brake is engaged and the signal circuit is low.
- The brake fluid is low.

Door Ajar Warning

The chime producer activates the door ajar audible warning as requested by the BCM. The BCM sends a serial data message to the chime producer indicating the chime frequency of a medium rate and continuous duration. The door ajar warning sounds and the appropriate door ajar indicator illuminates in the driver information center when the following occurs:

- The BCM determines that a door (driver door, passenger door, left rear door, right rear door) is open and the signal circuit is low. The instrument cluster also receives a serial data message from the BCM indicating the door ajar status.
- The vehicle is not in PARK. The BCM receives a serial data message indicating the gear position.

Object Detection

The chime producer activates the object detection audible warning as requested by the object alarm module. When an object is within the measuring range of the sensor, the ultrasonic pulse is reflected and is received by the sending or a neighboring sensor. The sensor converts this signal into a voltage signal and sends this signal to the object alarm module. The object alarm module evaluates the received sensor signals. As soon as an object is within the measuring range, the object alarm module sends a message via CAN-Bus to the chime producer in order to give out the acoustic distance signal. The measuring range is between 30–120 cm (11.81–47.24 in). From a distance of 120 cm (47.24 in), the acoustic signal is active. The frequency of the beep sound increases with decreasing distance. From a distance less than 30 cm (11.81 in), the sound becomes continuous.

Additional Warnings

The following warnings have an associated instrument cluster indicator or driver information center message:

- Turn Signal Indicators – The chime producer activates the audible warning as requested by the BCM. The chime produces two different chimes, one when the turn signal turns off and another when the turn signal turns on.
- Vehicle Overspeed Message – The chime producer activates the audible warning as requested by the BCM. The BCM sends a serial data message to the chime producer.
- Fuel Level Low Message – The chime producer activates the audible warning as requested by the BCM. The BCM sends a serial data message to the chime producer.
- Oil Pressure Indicator – The chime producer activates the audible warning as requested by the BCM. The BCM sends a serial data message to the chime producer.
- Park Assist Fault Clean Rear Bumper Message – The chime producer activates the audible warning as requested by the BCM. The BCM sends a serial data message to the chime producer.
- Tire Pressure Low Indicator – The chime producer activates the audible warning as requested by the BCM. The BCM sends a serial data message to the chime producer.

Refer to *Indicator/Warning Message Description and Operation 3-43*.

Head-Up Display Description and Operation

The P29 Head-Up Display projects an image on the windshield that is viewed from the driver seat. Information that is relevant to what the driver has selected is displayed, as well as any safety-critical information as it is happening.

The components of the head-up display are:

- P29 Head-Up Display
- A11 Radio

Head-Up Display

The P29 Head-Up Display is a slave device to the A11 Radio. The head-up display is powered through battery positive voltage and ground. It communicates directly with A11 Radio via serial data and only has limited self-diagnosis capacity. Head-up display DTCs are reported through the A11 Radio.

The P29 Head-Up Display projects a full color image onto the windshield and is only viewable from the driver seat. The image location and brightness is adjustable using the head-up display switch. The image information is received from the A11 Radio through a LVDS cable.

Driver Information Display

The A11 Radio sends the image information to the P29 Head-Up Display via an LVDS cable. The image sent to the P29 Head-Up Display is closely related to the information currently being displayed on the P53 Driver Information Display. For example, if an incoming phone call is displayed in the P53 Driver Information Display, this information will be displayed on the P29 Head-Up Display. If a navigation alert is shown in the P53 Driver Information Display, then a turn-by-turn alert will display on the P29 Head-Up Display. If the operator dismisses the navigation alert on the P53 Driver Information Display, it is also removed from the P29 Head-Up Display.

Head-Up Display Operation

In normal operation, the operator may select from three different display configurations. These display configurations provide the operator with different information, with the vehicle speed being the primary item, along with the following standard indicators:

- Turn signal indicators
- High beam indicator
- Lane departure warning indicator (if equipped)
- Vehicle detected ahead indicator (if equipped)
- Adaptive cruise control on indicator (if equipped)

Standard/Speed Configuration
The head-up display projects only the vehicle speed. Additionally, the outside air temperature, compass, and time may also be displayed.

Audio Configuration
The head-up display will project the current audio information when listening to the audio system and the active phone information if the operator is on a phone call.

Navigation Configuration
The head-up display will project navigation information. If a current route is being followed, turn by turn instructions and arrows will be displayed. If no route is programed, the compass heading is displayed.

Performance Configuration
The head-up display will project RPM and PRNDL information.

Adaptive Cruise Control Configuration (if equipped)
The head-up display will project the selected following distance when adaptive cruise control is active.

Indicator/Warning Message Description and Operation

Indicator LIGHT ON

Refer to the owner's manual for the descriptions and explanations of all indicator lights.

For diagnosis and repair information related to an indicator light, refer to the System Diagnosis and the Description of Operation that the message relates to.

Message Displayed

Refer to the owner's manual for descriptions and explanations of all messages displayed.

For diagnosis and repair information related to a displayed message, refer to the System Diagnosis and the Description of Operation that the message relates to.

Transmission Shift Lever Position Indicator

The transmission shift lever position indicator (if equipped) is located on the center console and indicates the current transmission shift lever position. The transmission shift lever position indicator receives power and ground and is controlled by the Body Control Module (BCM) via serial data. The Transmission Control Module/Powertrain Control Module determines transmission shift lever position based on signals from the transmission internal mode switch and sends the shift lever position information to the BCM via serial data.

Instrument Cluster Description and Operation

This vehicle does not contain a traditional instrument cluster to display vehicle information to the driver. Instead, it displays vehicle information on the P53 Diver Information Display. This P53 Diver Information Display is merely a display that is controlled by the A11 Radio. For more information, refer to [Link target (target-id 50968-) not found]

Image Display Cameras

Schematic and Routing Diagrams

Image Display Camera Schematics (360 Degree Vision Cameras (UV2 - UKL))

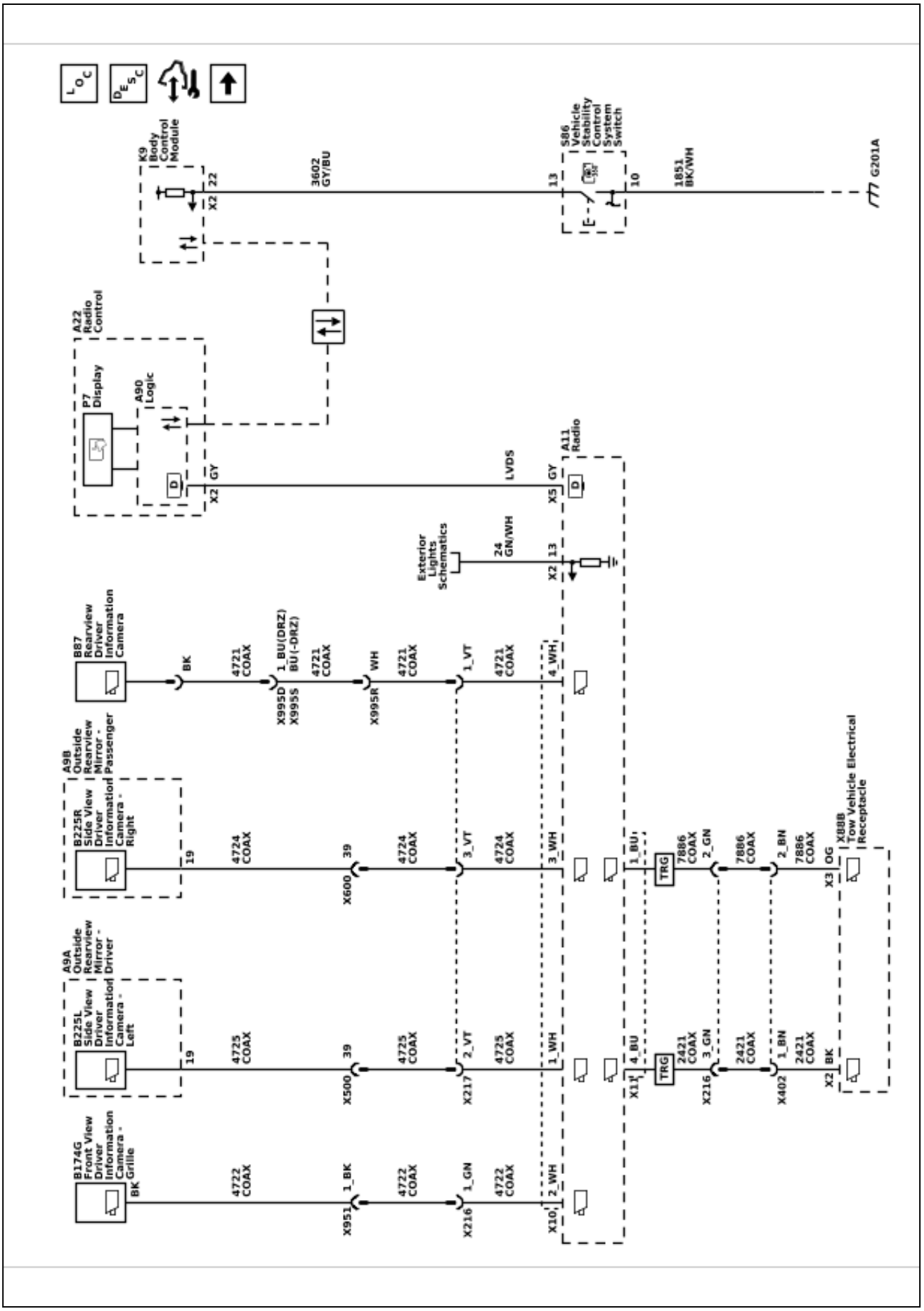

6613350

Image Display Camera Schematics (360 Degree Vision Cameras (UV2 & UKL))

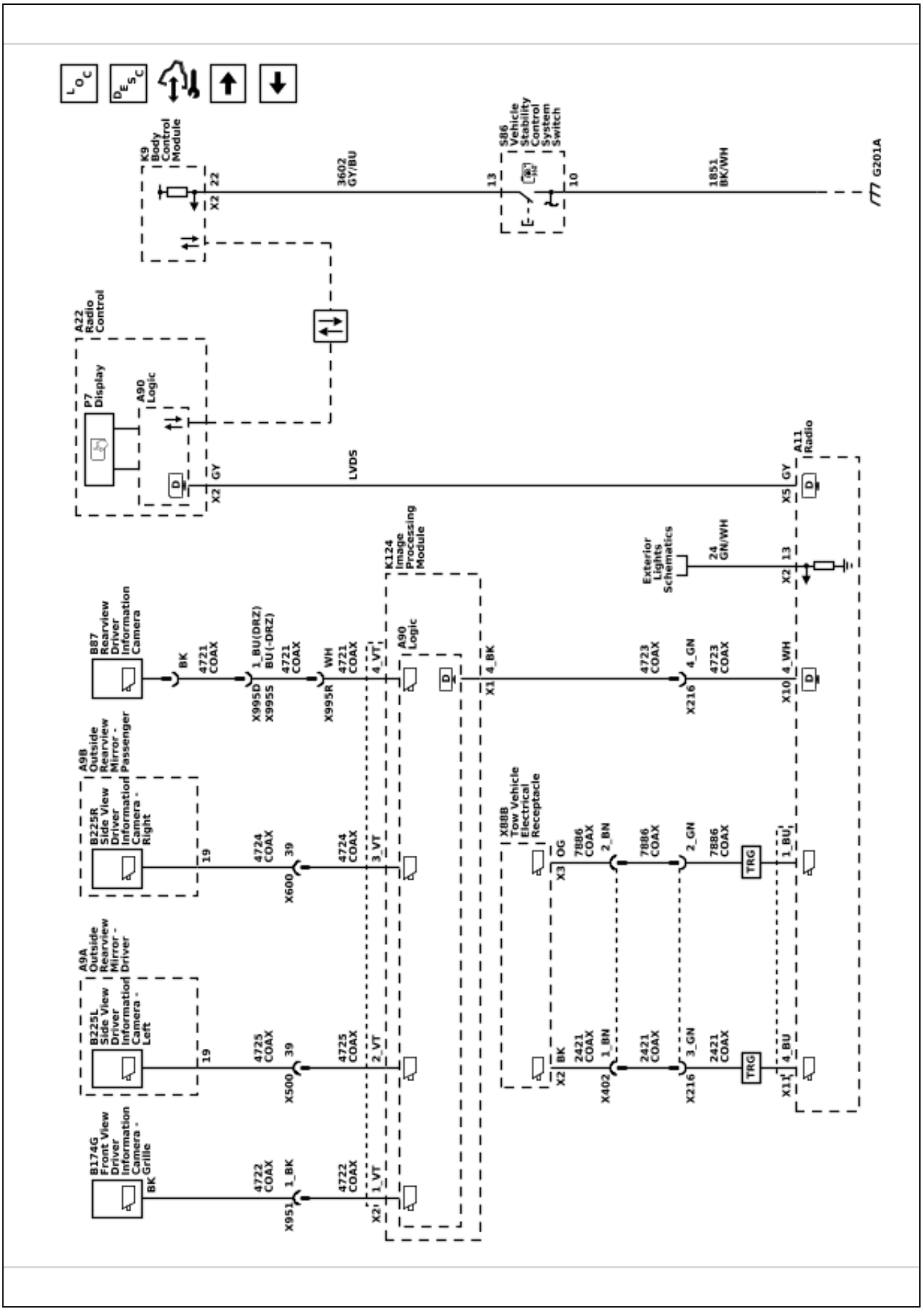

6613351

6613352

Image Display Camera Schematics (Inside Rearview Mirror Camera (DRZ))

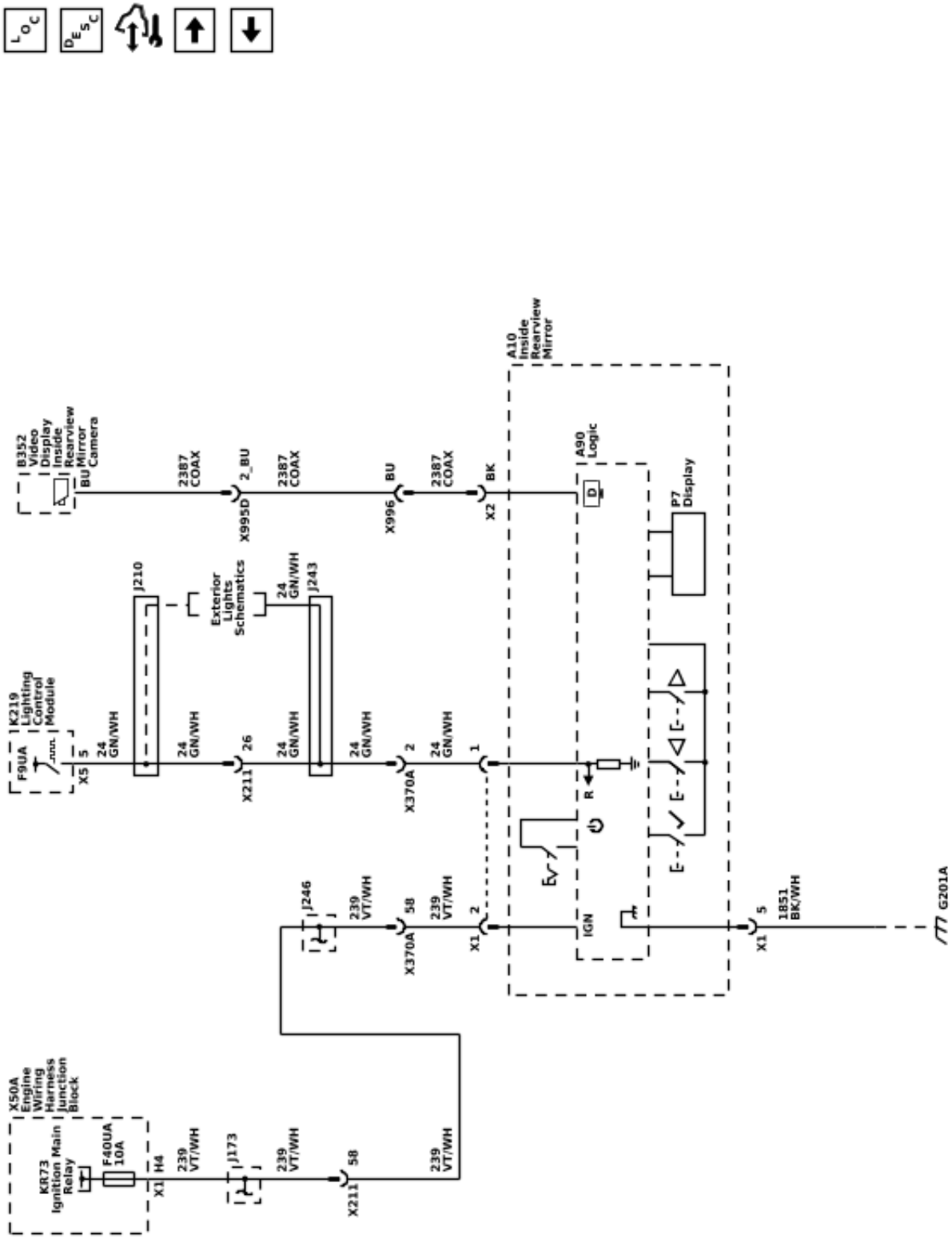

6613346

Image Display Camera Schematics (Card Reader Receptacle)

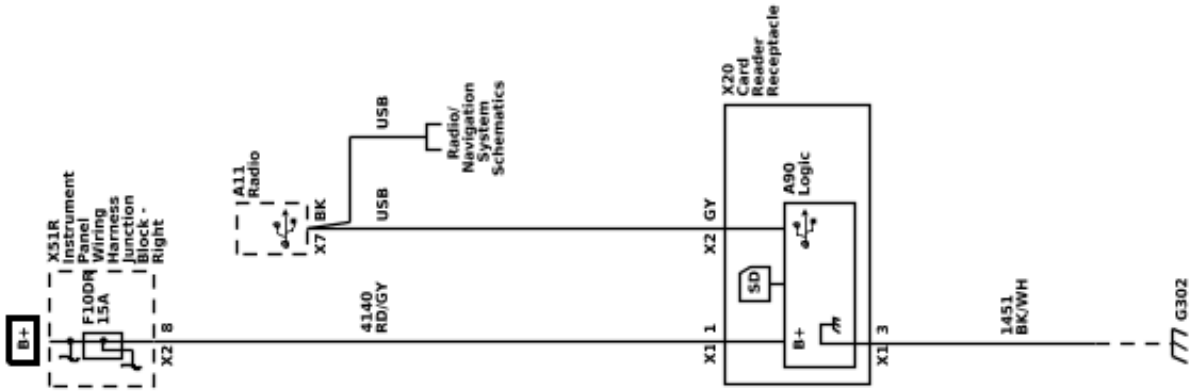

6619897

Image Display Camera Schematics (Interior View Camera (UCV))

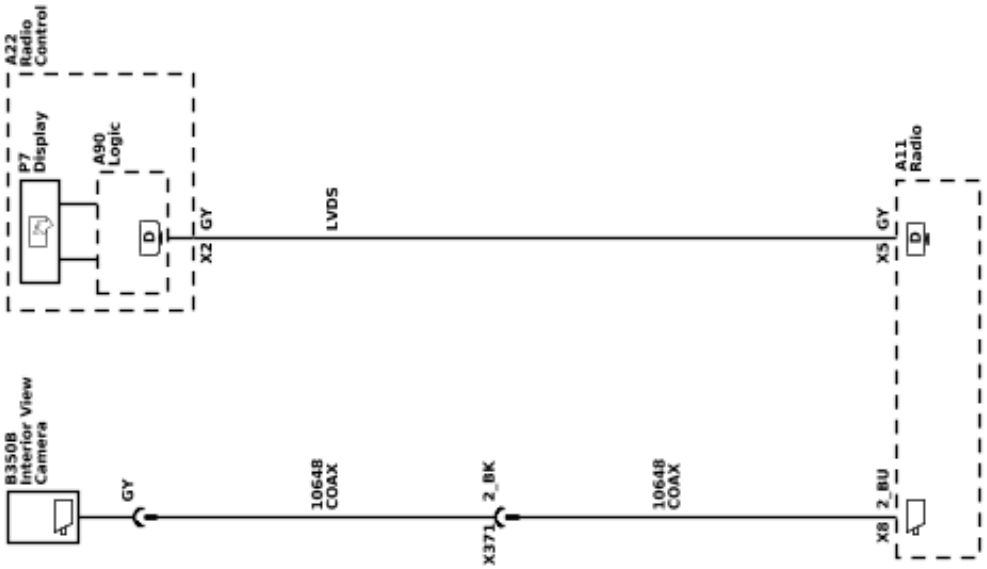

Description and Operation

Rearview Camera Full Display Mirror Description and Operation

If equipped, full display mirror provides a wider field of view than normally seen from the inside rearview mirror to assist when driving and changing lanes. When the tab under the inside rearview mirror is pulled rearward, a view of the area behind the vehicle displays on the mirror. The inside rearview camera full display mirror is connected to the outside rearview camera via a shielded coaxial cable.

When the tab under the inside rearview mirror is pulled rearward, a view of the area behind the vehicle displays on the mirror.

Adjust the rearview mirror for a clear view of the area behind the vehicle before turning on full display mirror. Use the three buttons on the bottom of the mirror to adjust the brightness, zoom, and tilt of the display. Make sure the light sensor is not covered when adjusting the brightness.

The inside rearview camera full display mirror may not work properly or display a clear image if:

- It is dark.
- The sun or the beam of headlamps are shining directly into the camera lens.
- Ice, snow, mud, or anything else builds up on the camera lens. Clean the lens, rinse it with water, and wipe it with a soft cloth.

When the mirror detects that the camera is not sending a valid video signal, it “blue screens” with a “no video” decal for 3 seconds, then reverts back to the mirror.

Rear Vision Camera Description and Operation

Rear Vision Camera System Operation

The rear vision camera system consists of a video camera located at the rear of the vehicle and the A11 Radio.

When the transmission is placed into REVERSE, a signal is sent to the A11 Radio indicating that camera operation is requested. The rearview camera sends video information to the A11 Radio through a coax cable. The coax cable also provides power from the A11 Radio to the rearview camera.

The following conditions may cause a degraded rear vision camera image:

- Ice, snow, or mud has built up on the rear vision camera
- Dark conditions
- Extreme light conditions, such as glare from the sun or the headlights of another vehicle
- Damage to the rear of the vehicle
- Extreme high temperatures or extreme temperature changes

If a malfunction is detected in the system, SERVICE REAR VISION CAMERA may be displayed on the Info Display Module as an indicator to the customer that a problem exists that requires service.

Surround Vision Camera Description and Operation

Warning: The Surround Vision cameras have blind spots and will not display all objects near the corners of the vehicle. Folding outside mirrors that are out of position may not display surround view correctly. Always check around the vehicle when parking or backing.

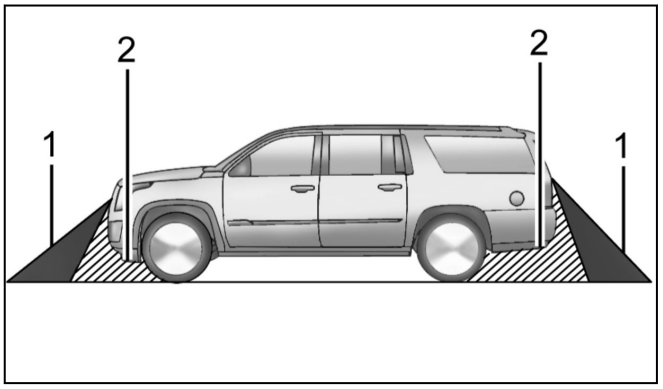

4291164

1. View displayed by the surround vision camera
2. Area not shown

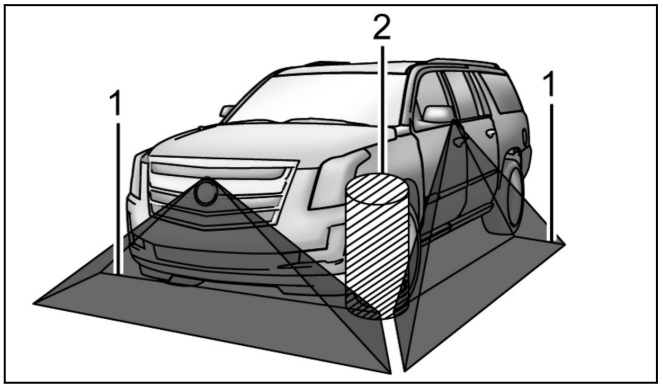

4291749

1. View displayed by the surround vision camera
2. Area not shown

The surround vision camera system consists of the following components:

- B87 Rearview Camera
- B174G Frontview Camera – Grille

- K157 Video Processing Control Module
- A11 Radio **OR** K74 Human Machine Interface Module
- B225L Sideview Camera – Left
- B225R Sideview Camera – Right
- X20 Memory Card Receptacle (with XVR)

When the vehicle is traveling at speeds slower than 6 mph (10kph) the video processing control module will power up the cameras and send a video signal to the radio or human machine interface module.

The following conditions may cause a degraded surround vision camera image:

- Ice, snow, or mud has built up on the rear vision camera
- Dark conditions
- Extreme light conditions, such as glare from the sun or the headlights of another vehicle
- Damage to the rear of the vehicle
- Extreme high temperatures or extreme temperature changes

Surround Vision displays an overhead view of the area surrounding the vehicle, along with the front or rear camera views in the center stack. The front camera is in the grille or near the front emblem, the side cameras are on the bottom of the outside rearview mirrors, and the rear vision camera is above the license plate.

Note: Images from the Sideview Cameras are only displayed when both front doors are properly closed.

Features of the Surround Vision System

- Rear camera (B87 Rearview Camera) view alongside overhead view is displayed in reverse
- Front camera (B174G Frontview Camera – Grille) view alongside overhead view is displayed after shifting out of reverse to Neutral or Drive
- Will display front view when front park assist object is within trigger range calibration value (30 cm (12 in) in a forward gear
- Image is removed from display when vehicle speed exceeds speed calibration (10kph/6 mph) or button press / screen touch

System Operation

The video processing control module is connected to each camera via a shielded coaxial cable. The coaxial cable provides power for the camera and also carries the video image from the cameras to the video processing control module for processing. The video processing control module will then send the processed image output to infotainment system via another coaxial cable.

The video processing module receives various vehicle information (such as steering wheel angle, object detection, etc) from other sources such as parking assist modules and the Body Control Module via serial data. This information is used to produce the enhanced surround vision system images that include a warning triangle that may display if an object is detected nearby. This triangle changes from amber to red and increases in size as the object gets closer to the vehicle. Also, dynamic guidelines are displayed in Reverse to show the projected path of the vehicle based on steering wheel angle. Due to this use of vehicle information, any faults or DTCs in these related systems can prohibit proper surround vision operation.

If equipped, the video processing control module system may have a memory card receptacle (with XVR) located in the trunk. The memory card receptacle interfaces with the video processing control module via a USB cable. The memory card receptacle also receives fused battery voltage and ground from the video processing control module. The video processing control module uses the memory card as a mass storage device, similar to a USB storage device.

Secondary and Configurable Customer Controls

Schematic and Routing Diagrams

6613353

Steering Wheel Secondary/Configurable Control Schematics (Rear and Right Front Steering Wheel Controls)

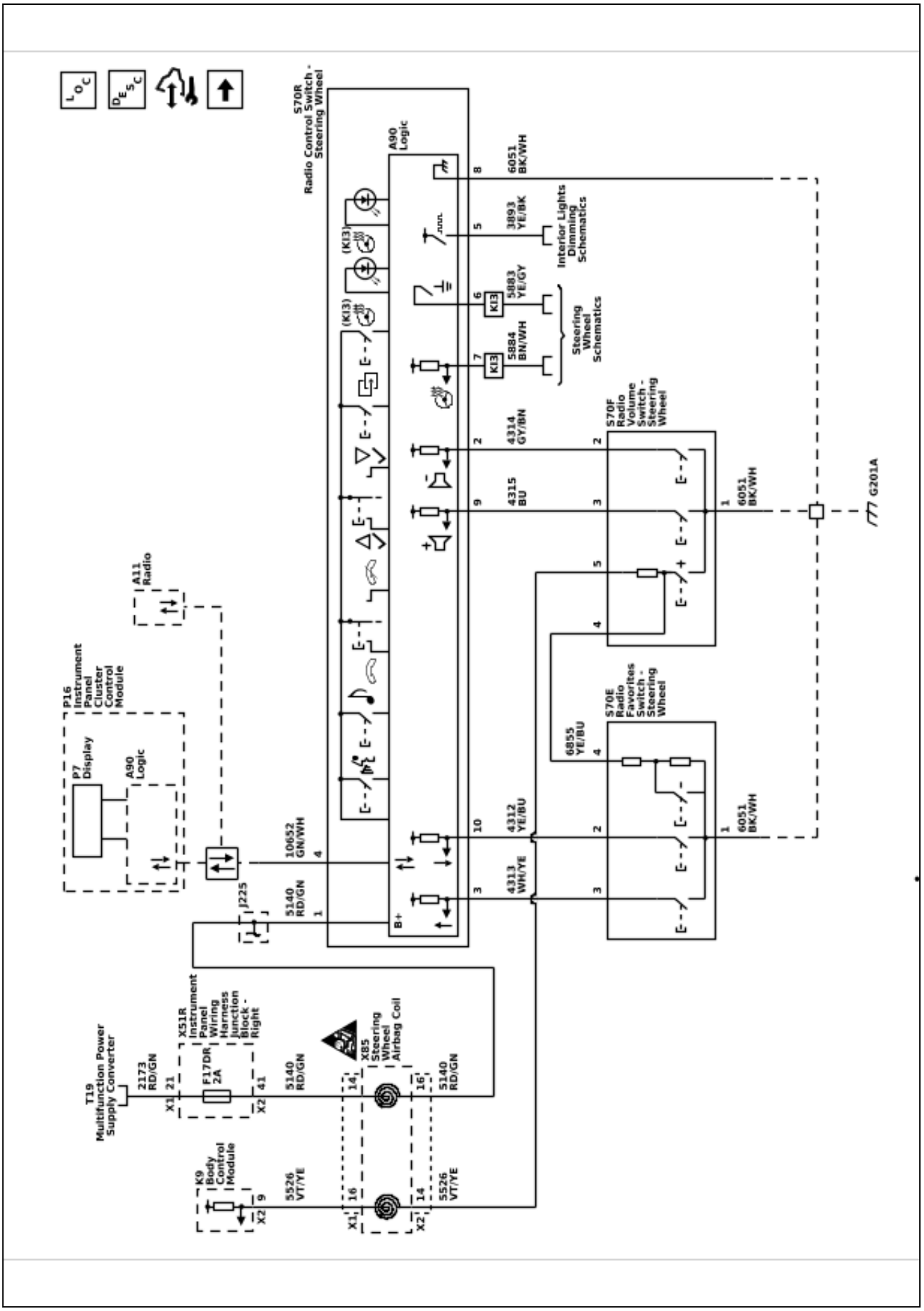

Steering Wheel Secondary/Configurable Control Schematics (Left Front Steering Wheel Controls)

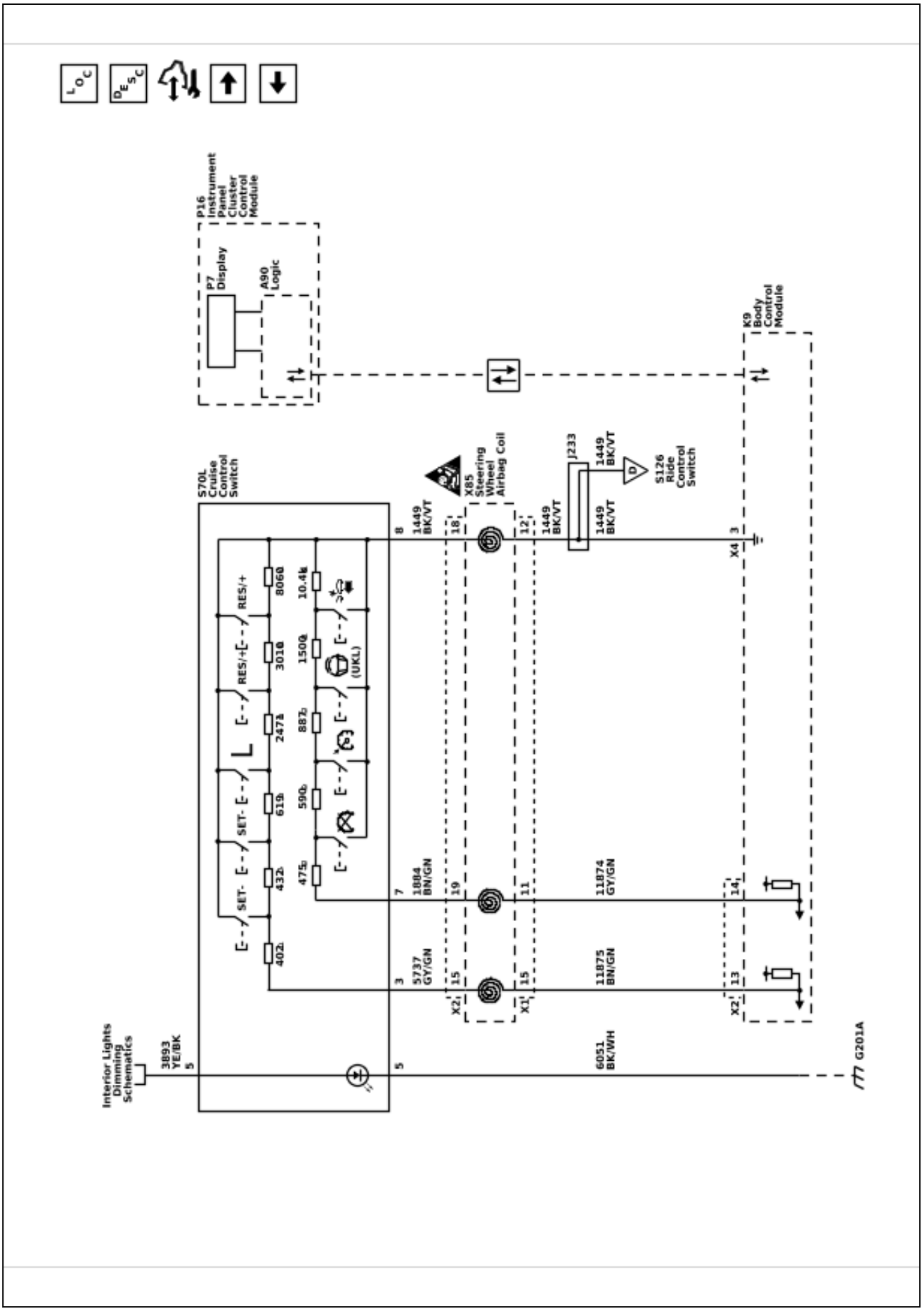

6613354

Steering Wheel Secondary/Configurable Control Schematics (Ride Control Switch)

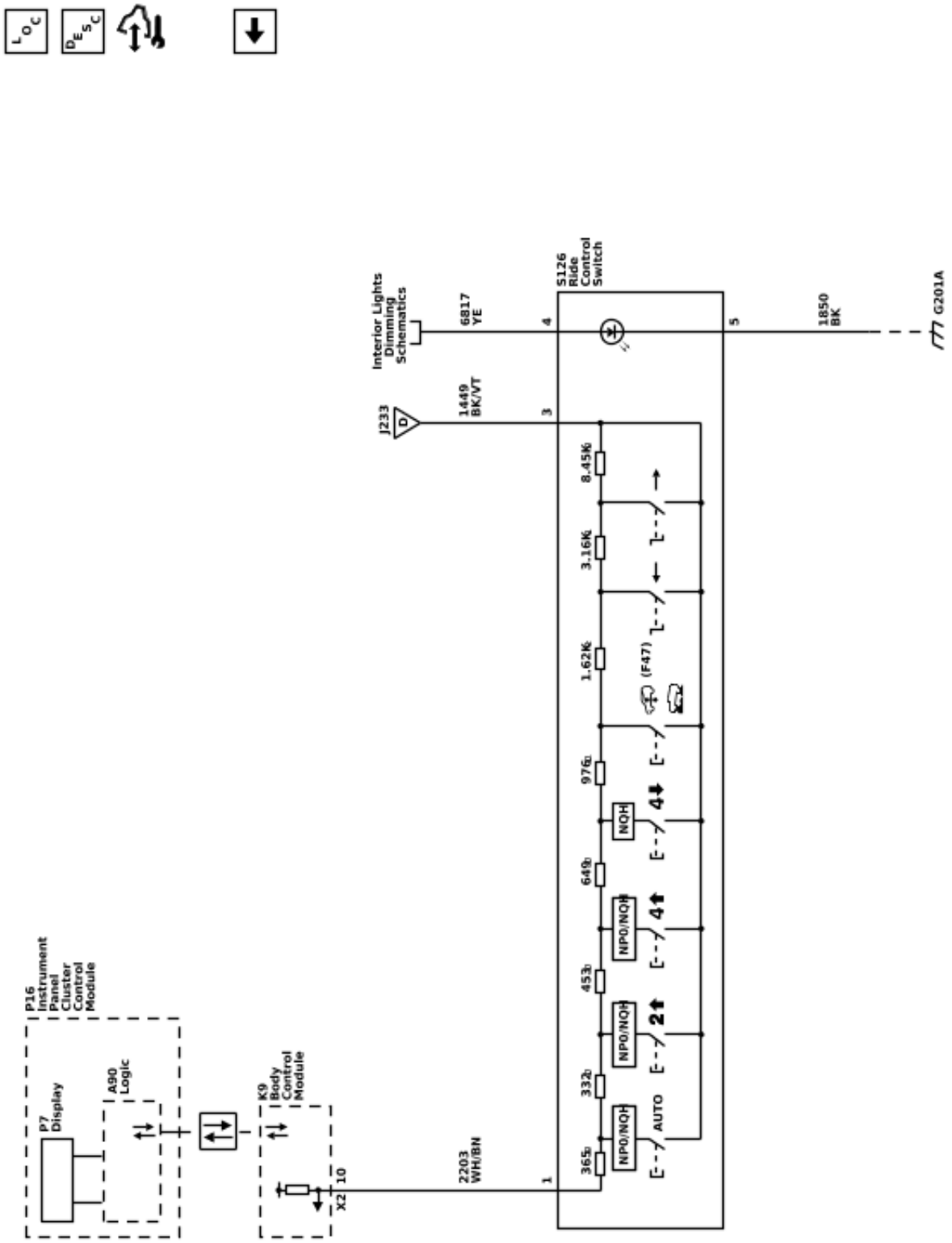

Description and Operation

Drive Mode Description and Operation

The ride control system is a customer configurable control that allows the vehicle operator to tailor the vehicle operation and driveability parameters based on driving conditions. The ride control is controlled by the vehicle operator through the Drive Mode/Ride Control Switch. The switch is an input to a control module. When the switch is activated a message will be sent indicating the requested ride control. Control modules that are involved in changing their operation based on differing ride controls will then change their operating values. The Body Control Module will illuminate the appropriate ride control indicator on the Drive Mode/ Ride Control Switch.

The components of the ride control system are:

- Drive Mode/Ride Control Switch
- Engine Control Module
- Body Control Module

Other control modules or components that may respond to the commanded ride control are:

- Electronic Brake Control Module
- Power Steering Control Module
- Rear Differential Clutch Control Module
- Transmission Control Module

Steering Wheel Controls Description and Operation

The steering wheel control switches duplicate the function of the primary controls of the associated component, through a network of momentary contact switches.

The Steering Wheel Controls are divided into a right-hand set and left-hand set. The switches are connected to a LIN serial data circuit and provide input to a control module.

Note: In vehicles with RPO 5W4 (Special Service Package), the steering wheel controls on the left rear side do not control radio favorites. Instead, momentary output in blunt cut harness for two-way radio microphone and latching output in blunt cut siren/light.

Note: In vehicles with RPO 9C1 (Sales Package-Police Vehicle), the steering wheel controls on the left rear side do not control radio favorites. Instead, momentary output in blunt cut harness for two-way radio microphone and latching output in blunt cut siren/light.

The right-hand steering wheel control switch controls various audio, communication and vehicle systems. The right-hand rear switch consists of volume up and volume down buttons. The left-hand rear switch consists of favorite up and favorite down buttons.

Section 4

Engine/Propulsion

Starting, Charging, and Low Voltage Energy Storage **4-2**
Schematic and Routing Diagrams **4-2**
Starting and Charging Schematics 4-3
Auxiliary Battery Schematics 4-7
Description and Operation **4-8**
Battery Description and Operation 4-8
Charging System Description and Operation 4-9
Electrical Power Management Description and Operation 4-11
Starting System Description and Operation 4-14
Stop/Start System Description and Operation 4-15

Engine/Propulsion

Starting, Charging, and Low Voltage Energy Storage

Schematic and Routing Diagrams

6613355

Starting and Charging Schematics (Starting (L84 / L87))

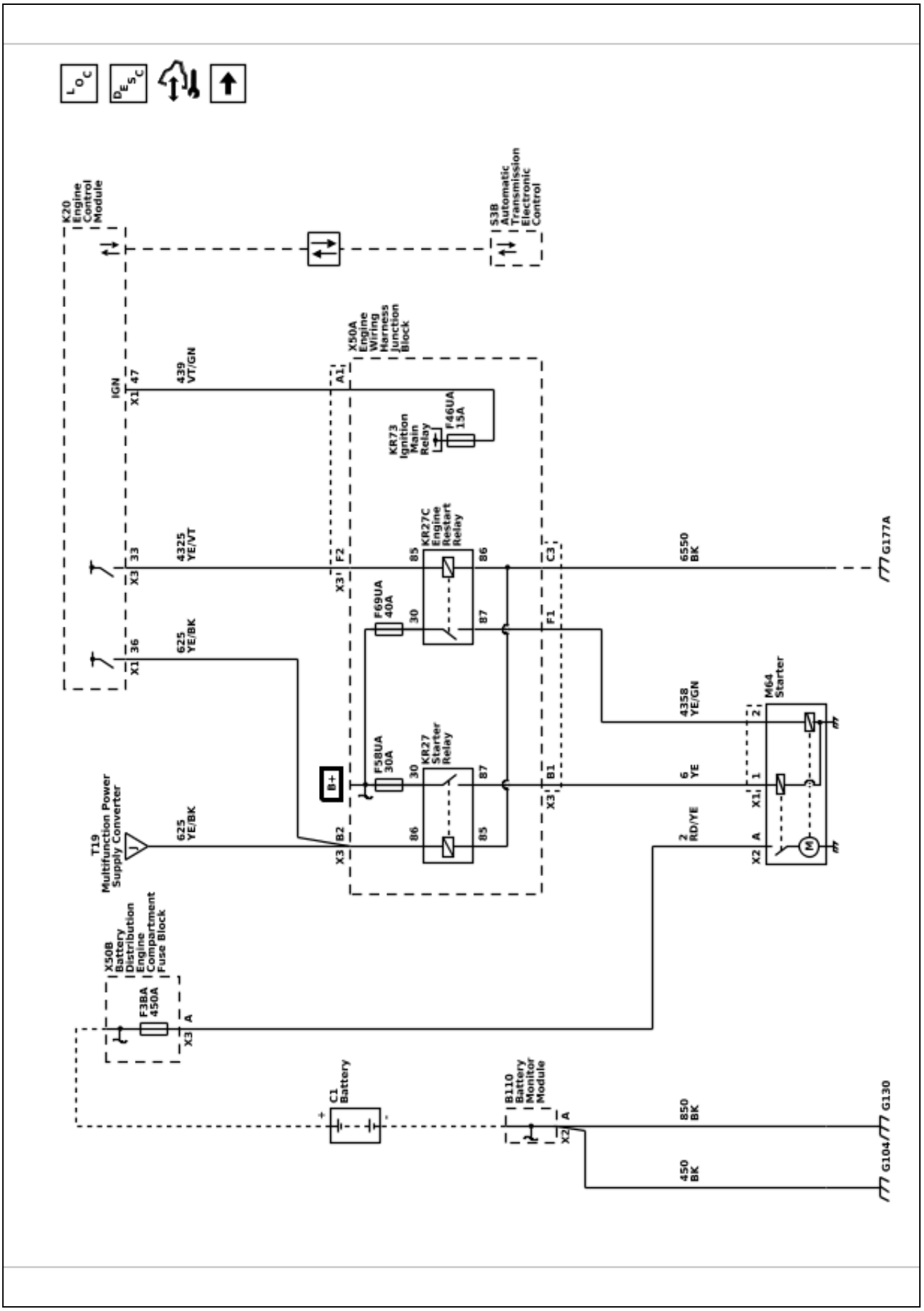

6613356

Starting and Charging Schematics (Starting (LZ0))

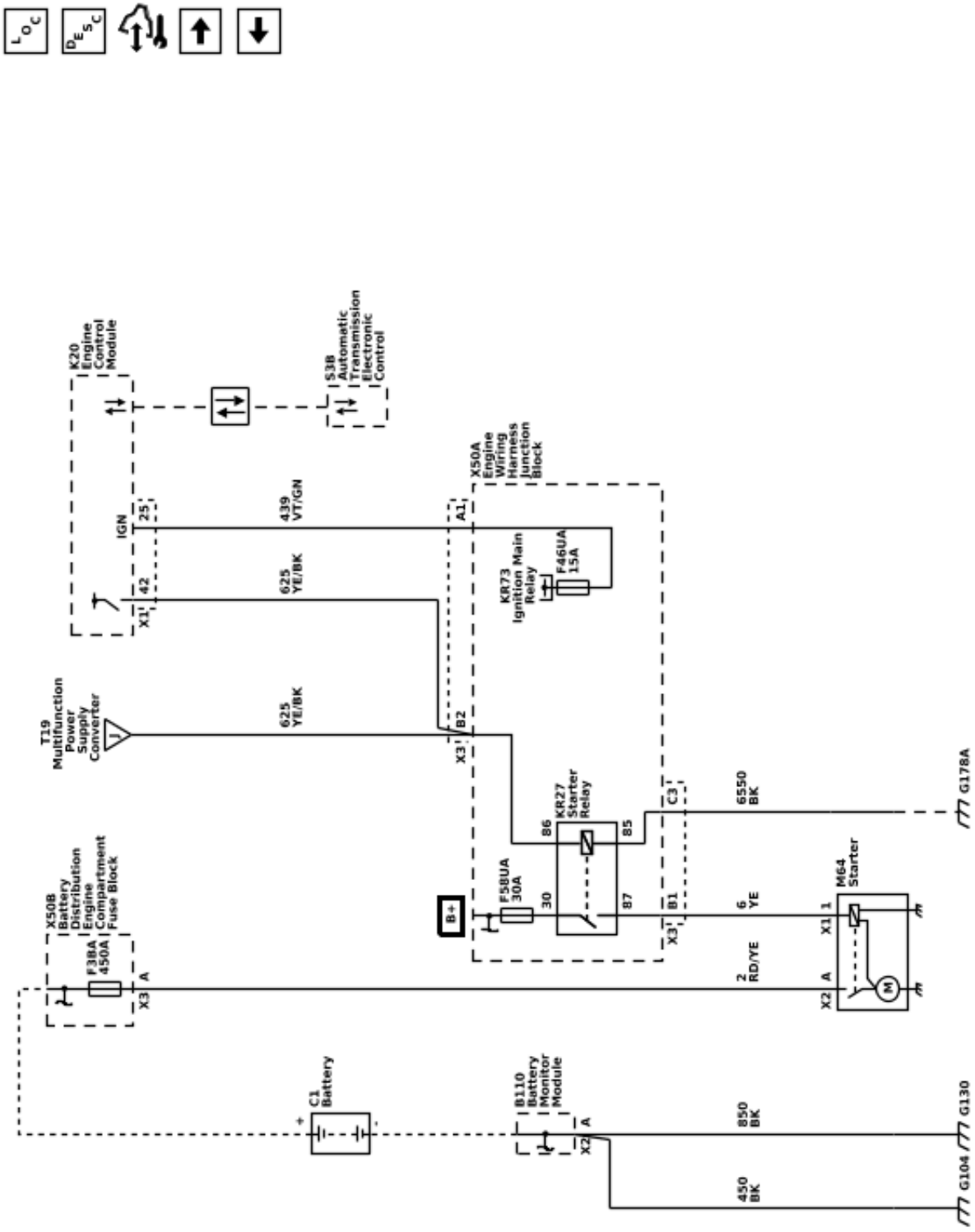

Starting and Charging Schematics (Charging)

6613357

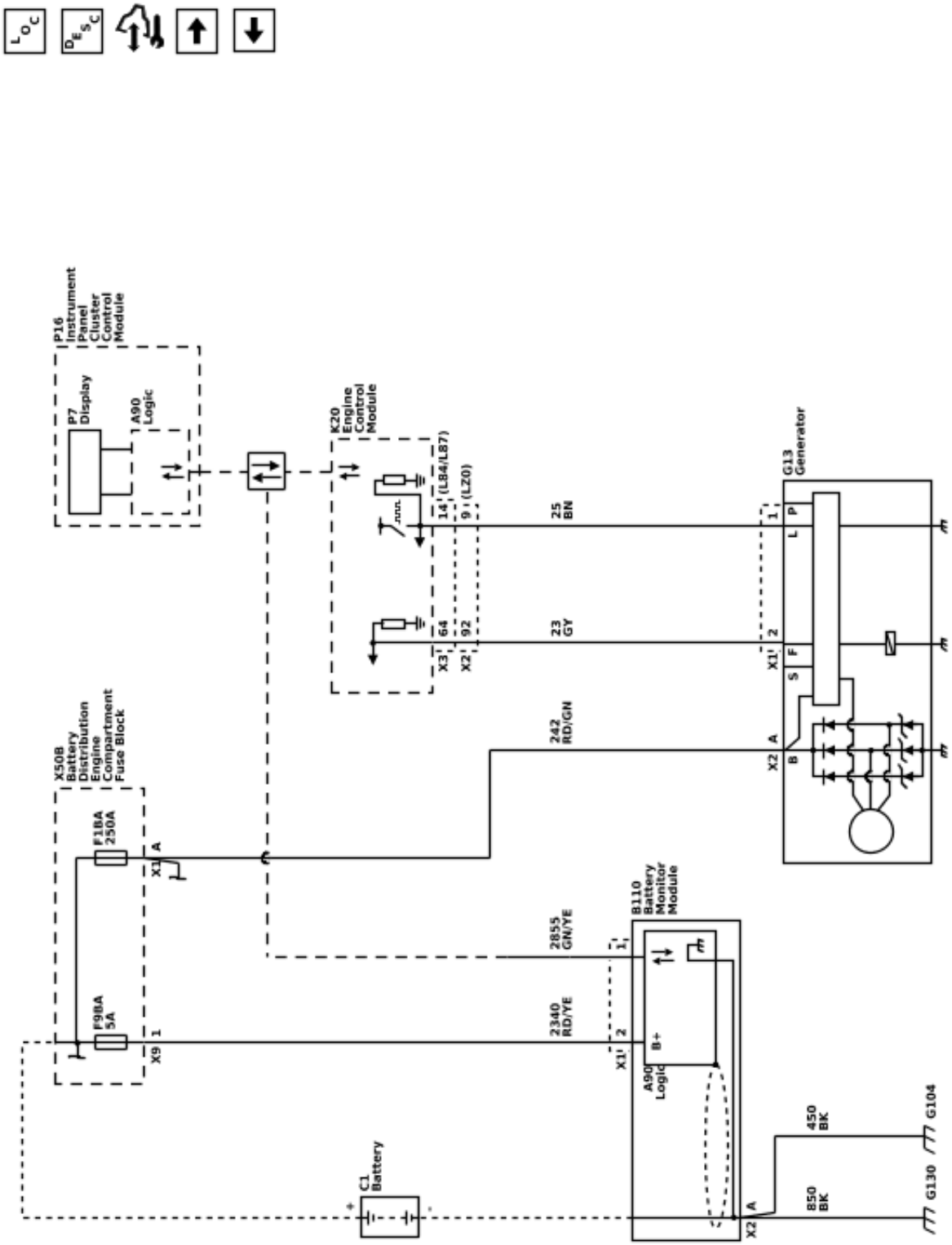

Starting and Charging Schematics (Stop/Start System)

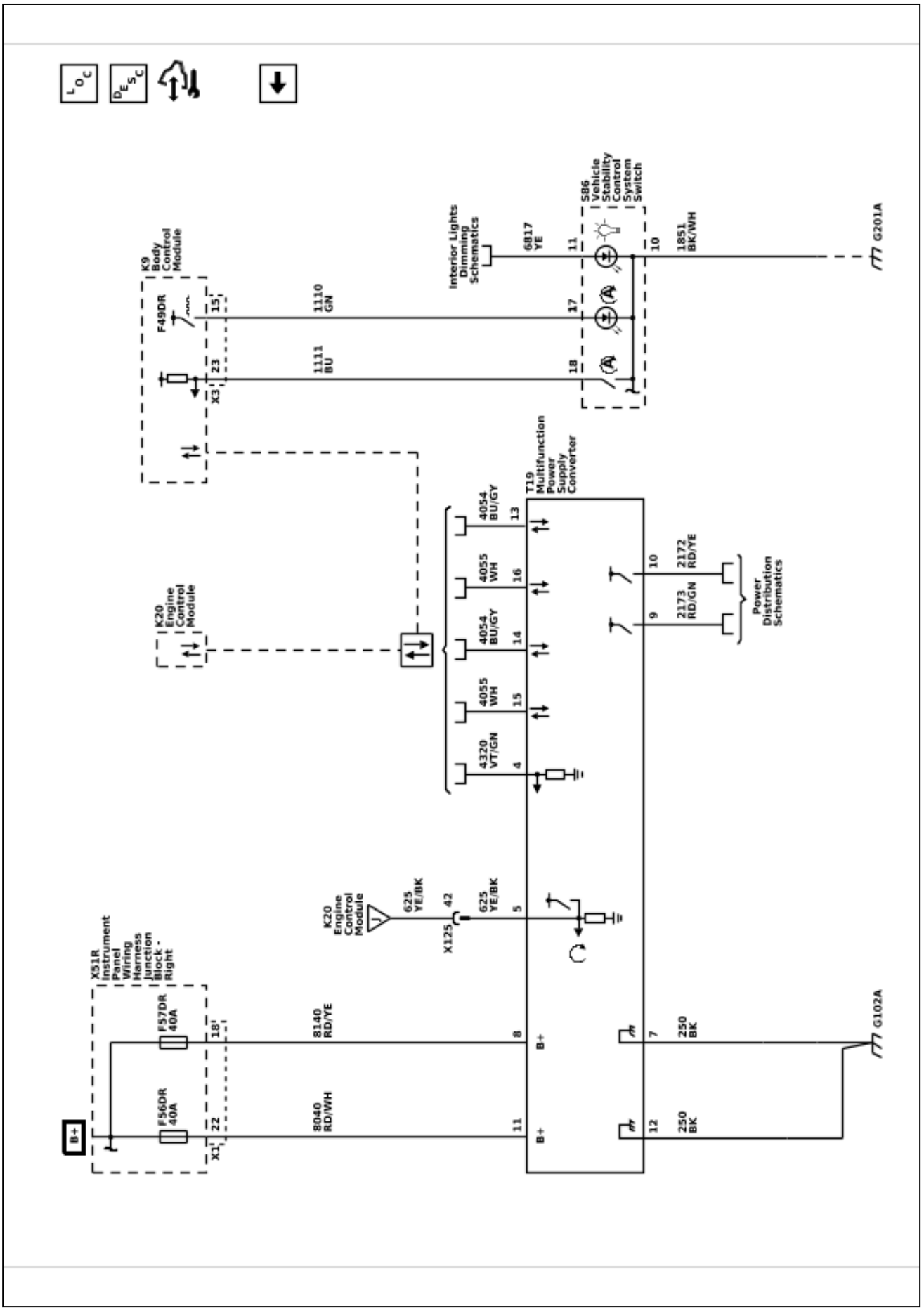

6613358

6760542

Auxiliary Battery Schematics (Auxiliary Battery (5W4 / 9C1))

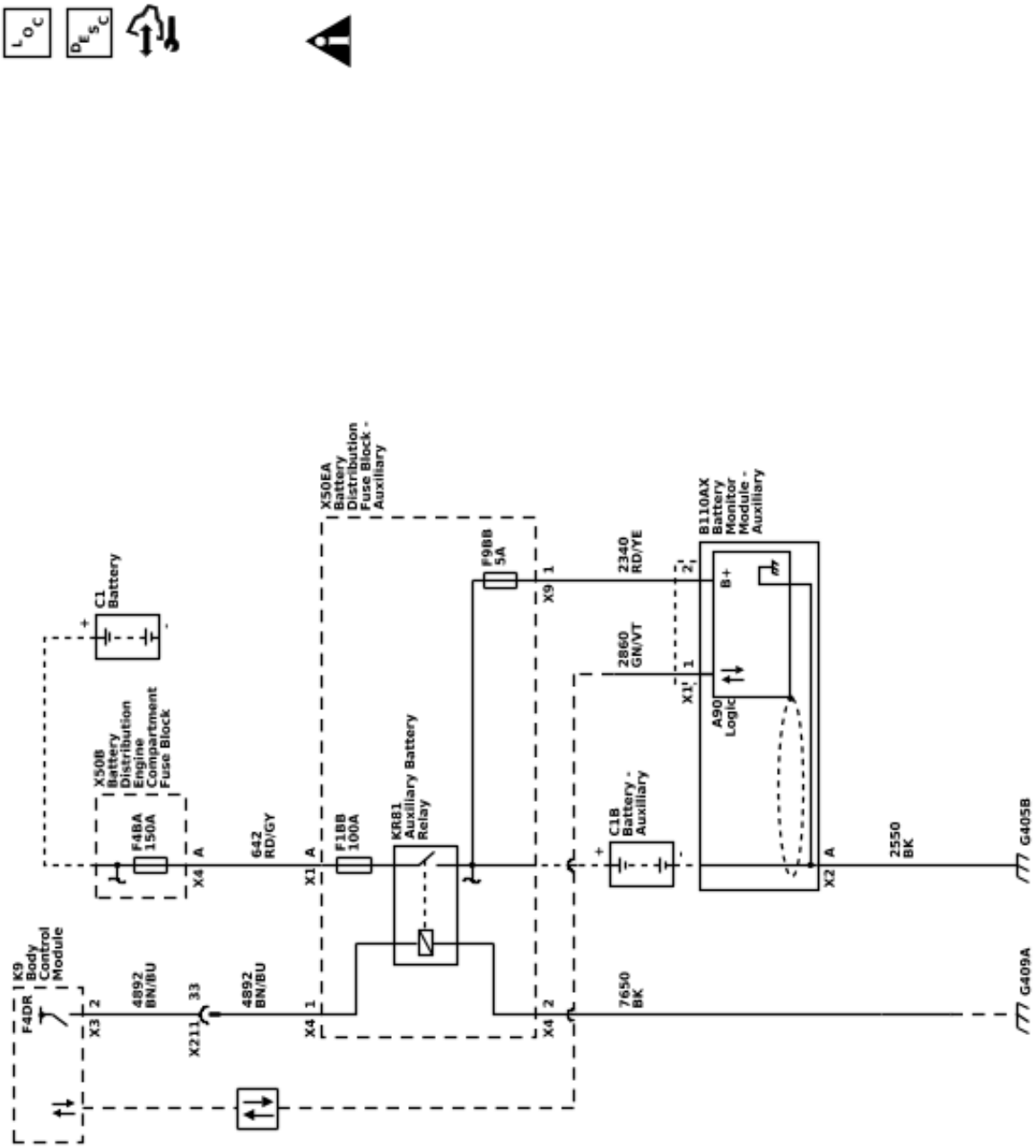

Description and Operation

Battery Description and Operation

Warning: Batteries produce explosive gases, contain corrosive acid, and supply levels of electrical current high enough to cause burns. Therefore, to reduce the risk of personal injury when working near a battery:

- ***Always shield your eyes and avoid leaning over the battery whenever possible.***
- ***Do not expose the battery to open flames or sparks.***
- ***Do not allow the battery electrolyte to contact the eyes or the skin. Flush immediately and thoroughly any contacted areas with water and get medical help.***
- ***Follow each step of the jump starting procedure in order.***
- ***Treat both the booster and the discharged batteries carefully when using the jumper cables.***

Batteries that are no longer wanted must be disposed of by an approved battery recycler and must never be thrown in the trash or sent to a landfill.

Batteries that are not part of the vehicle itself, not the battery under the hood, must only be transported on public streets for business purposes via approved hazardous material transportation procedures.

Battery storage, charging and testing facilities in repair shops must meet various requirements for ventilation, safety equipment, material segregation, etc.

The maintenance free battery is standard. There are no vent plugs in the cover. The battery is completely sealed except for 2 small vent holes in the side. These vent holes allow the small amount of gas that is produced in the battery to escape.

The battery has 3 functions as a major source of energy:

- Engine cranking
- Voltage stabilizer
- Alternate source of energy with generator overload

Battery Low Start Vehicle Message

The body control module (BCM) monitors battery positive voltage to determine battery state of charge. If one or more of the BCM battery positive voltage terminals measure less than approximately 11.6V compared to the BCM ground circuits, this message will display and four chimes may sound. Start the vehicle immediately. If the vehicle is not started and the battery continues to discharge, the climate controls, heated seats, and audio systems will shut off and the vehicle may require a jump start. These systems will function again after the vehicle is started.

Battery Ratings

A battery has 2 ratings:

- Cold cranking amperage
- Amperage hours

When a battery is replaced use a battery with similar ratings. See battery specification label on the original battery.

Amperage Hours

The amperage hour rating tells you how much amperage is available when discharged evenly over a 20 hour period. The amperage hour rating is cumulative, so in order to know how much constant amperage the battery will output for 20 h, you have to divide the amperage hour rating by 20. Example: If a battery has an amperage hour rating of 74, dividing by 20 = 3.75. Such a battery can carry a 3.75 A load for 20 hours before dropping to 10.5 V. (10.5 V is the fully discharged level, at which point the battery needs to be recharged). A battery with an amperage hour rating of 55 will carry a 2.75 A load for 20 hours before dropping to 10.5 V.

Cold Cranking Amperage

The cold cranking amperage is an indication of the ability of the battery to crank the engine at cold temperatures. The cold cranking amperage rating is the minimum amperage the battery must maintain for 30 seconds at −18°C (0°F) while maintaining at least 7.2 V. See battery label for the cold cranking amperage rating of this battery.

Charging System Description and Operation

Electrical Power Management Overview

The electrical power management system is designed to monitor and control the charging system and send diagnostic messages to alert the driver of possible problems with the battery and generator. This electrical power management system primarily utilizes existing on-board computer capability to maximize the effectiveness of the generator, to manage the load, improve battery state-of-charge and life, and minimize the system's impact on fuel economy. The electrical power management system performs 3 functions:

- Monitor the battery voltage and estimate the battery condition
- Take corrective actions by boosting idle speeds, and adjusting the regulated voltage
- Perform diagnostics and driver notification

The battery condition is estimated during ignition/vehicle off and during ignition/vehicle on. During ignition/vehicle off the state-of-charge of the battery is determined by measuring the open-circuit voltage. The state-of-charge is a function of the acid concentration and the internal resistance of the battery, and is estimated by reading the battery open circuit voltage when the battery has been at rest for several hours.

Any time the ignition/vehicle is on, the vehicle algorithm continuously estimates battery state-of-charge based on adjusted net amp hours, battery capacity, initial state-of-charge, and calculated temperature.

While the engine is running, the battery degree of discharge is primarily determined by the integrated battery current sensor, to obtain net amp hours.

In addition, the electrical power management function is designed to perform regulated voltage control to improve battery state-of-charge, battery life, and fuel economy. This is accomplished by using knowledge of the battery state-of-charge and temperature to set the charging voltage to an optimum battery voltage level for recharging without detriment to battery life.

Charging System Components

G13 Generator
The engine drive belt drives the generator. When the rotor is spun, it induces an alternating current (AC) into the stator windings. The AC voltage is then sent through a series of diodes for rectification. The rectified voltage has been converted into a direct current (DC) for use by the vehicles electrical system to maintain electrical loads and the battery charge.
The voltage regulator integral to the generator controls the output of the generator; It is not serviceable.
The voltage regulator controls the amount of current provided to the rotor. If the generator has field control circuit fault, the generator defaults to an output voltage of 13.8 V.

The generator is serviced as a complete assembly. If there is a diagnosed fault in the generator, it must be replaced as an assembly.

Generator Pulley
The pulley drives the Generator via the engine drive belt. There are 2 types of pulleys:

1. Conventional solid Pulley which is bolted to the Generator stator shaft. This Pulley can be serviced separately.

2. One Way Clutch Pulley or Overrunning Alternator Decoupler Pulley allows the Generator to spin freely when the engine rapidly slows down on sudden deceleration. This part is not serviceable and the Generator needs to be replaced as an assembly.

K9 Body Control Module (BCM)
The K9 Body Control Module communicates with the K20 Engine Control Module and the instrument cluster for electrical power management operation. The BCM determines the output of the generator and sends the information to the ECM for control of the generator turn on signal circuit. It monitors the generator field duty cycle signal circuit information sent from the ECM for control of the generator. It monitors the battery current sensor, the battery positive voltage circuit, and estimates battery temperature to determine battery state of charge. The BCM also performs idle boost.

B110 Battery Monitor Module
The Battery Monitor Module communicates to the BCM via LIN. The BCM shares this information with the ECM. The purpose of the battery sensor module is to transmit battery information that the BCM/ECM can use to make decisions regarding stop/start, battery saver mode, and load shedding.

K20 Engine Control Module (ECM)
When the engine is running, the generator turn-on signal is sent to the generator from the ECM, turning on the regulator. The generator's voltage regulator controls current to the rotor, thereby controlling the output voltage. The rotor current is proportional to the electrical pulse width supplied by the regulator. When the engine is started, the regulator senses generator rotation by detecting AC voltage at the stator through an internal wire. Once the engine is running, the regulator varies the field current by controlling the pulse width. This regulates the generator output voltage for proper battery charging and electrical system operation. The generator field duty terminal is connected internally to the voltage regulator and externally to the ECM. When the voltage regulator detects a charging system problem, it grounds this circuit to signal the ECM that a problem exists. The ECM monitors the generator field duty cycle signal circuit,

and receives control decisions based on information from the BCM.

P16 Instrument Cluster
As a means of displaying the charging system functions, some vehicles may be equipped with a voltmeter gauge on the instrument cluster and/or a system voltage display in the driver information center. These will indicate the current vehicle system voltage.

The instrument cluster also provides customer notification if there is a concern with the charging system. There are two means of notification: a charge indicator on the instrument cluster and/or a service system message displayed on the Driver Information Center (DIC) if equipped.

Charging System Operation

The purpose of the charging system is to maintain the battery charge and vehicle loads. There are 6 modes of operation and they include:

- Battery Sulfation Mode
- Charge Mode
- Fuel Economy Mode
- Head lamp Mode
- Start Up Mode
- Voltage Reduction Mode

The ECM Controls the Generator through the generator turn–on signal circuit, also known as the Generator L-terminal. The ECM monitors the generator performance though the Generator field duty cycle signal circuit, also known as the generator F-terminal.

The Generator turn–on signal (Generator L-terminal) is a Pulse Width Modulation (PWM) signal of 128 Hz with a duty cycle of 0–100%. Normal duty cycle is between 5–95%. 0–5% and 95–100% are for diagnostic purposes, with 0–5% monitoring for an open circuit and 95–100% monitoring for a short to ground at a fixed 13.8 V. The following table shows the commanded duty cycle and output voltage of the Generator:

Commanded Duty Cycle	Generator Output Voltage (+/- .25 V)
0–5%	13.8 V
10%	11 V
20%	11.56 V
30%	12.13 V
40%	12.69 V
50%	13.25 V
60%	13.81 V
70%	14.38 V
80%	14.94 V
90%	15.5 V
95–100%	13.8 V

The Generator provides a PWM feedback signal of the Generator voltage output through the Generator field duty cycle signal circuit to the ECM. This information is sent to the Body Control Module (BCM). The Generator field duty cycle signal (Generator F-terminal) is a PWM signal of 60–460 Hz with a duty cycle of 0–100%. Normal duty cycle is between 5–100%. 0–5% is reserved for diagnostic purposes.

As the charging systems works to maintain the battery charge and manage vehicle electrical loads, it is normal for the voltmeter gauge on the instrument cluster or the system voltage displayed in the DIC to fluctuate or change. This does not indicate a malfunction. Depending on the battery state of charge and the vehicle electrical load, these values may be anywhere from 12.5 V to 15.5 V.

Charging System Modes

Battery Sulfation Mode
The BCM will enter this mode when the interpreted Generator output voltage is less than 13.2 V for 45 minutes. When this condition exists the BCM will enter Charge Mode for 2–3 minutes. The BCM will then determine which mode to enter depending on voltage requirements.

Charge Mode
The BCM will enter Charge Mode when ever one of the following conditions are met:

- Windshield wipers are ON for more than 3 s.
- Climate Control Voltage Boost Mode Request is true, as sensed by the HVAC control module via serial data. High speed cooling fan, rear defogger, and HVAC high speed blower operation can cause the BCM to enter the Charge Mode.
- The estimated battery temperature is less than 0°C (32°F).
- Battery State of Charge is less than 80%.
- Vehicle speed is greater than 145 km/h (90 mph)
- A current sensor malfunction exists.
- System voltage is determined to be below 12.56 V

When any one of these conditions is met, the system will set targeted generator output voltage to a charging voltage between 13.9–15.5 V, depending on the battery state of charge and estimated battery temperature.

Fuel Economy Mode
The BCM will enter Fuel Economy Mode when the estimated battery temperature is at least 0°C (32°F) but less than or equal to 80°C (176°F), the calculated battery current is less than 15 A and greater than −8 A, and the battery state-of-charge is greater than or equal to 80%. Its targeted generator output voltage is the open circuit voltage of the battery and can be between 12.5–13.1 V. When fuel economy mode is active, the generator is not charging, only maintaining open circuit battery voltage. The BCM will exit this mode and enter Charge Mode when any of the conditions described above are present.

Headlamp Mode
The BCM will enter Headlamp Mode when ever the head lamps are ON (high or low beams). Voltage will be regulated between 13.9–14.5 V.

Start Up Mode
When the engine is started the BCM sets a targeted generator output voltage of 14.5 V for 30 s.

Tow/Haul Mode (if applicable)
Pressing the Tow/Haul Mode button located on the center stack, the vehicle system voltage is raised and the remote (non-vehicle) battery will be charged. Having the headlamps on will raise the system voltage and if the Tow/Haul button is applied it will not serve any purpose. The voltage is regulated between 13.9-14.5 V.

Instrument Cluster Operation

Charge Indicator Operation
The instrument cluster illuminates the charge indicator and displays a warning message in the driver information center if equipped, when the one or more of the following occurs:

- The ECM detects that the generator output is less than 11 V or greater than 16 V. The instrument cluster receives a serial data message from the ECM requesting illumination.
- The instrument cluster determines that the system voltage is less than 11 V or greater than 16 V for more than 30 s. The instrument cluster receives a serial data message from the BCM indicating there is a system voltage range concern.
- The instrument cluster performs the displays test at the start of each ignition cycle. The indicator illuminates for approximately 3 s.

Driver Information Center Message: BATTERY NOT CHARGING SERVICE CHARGING SYSTEM or SERVICE BATTERY CHARGING SYSTEM
The BCM and the ECM will send a serial data message to the driver information center for the BATTERY NOT CHARGING SERVICE CHARGING SYSTEM or SERVICE BATTERY CHARGING SYSTEM message to be displayed. It is displayed when a charging system DTC is a current DTC. The message is turned off when the conditions for clearing the DTC have been met.

Voltmeter Gauge and/or System Voltage Display (if equipped)
As a means of displaying the charging system functions, some vehicles may be equipped with a voltmeter gauge on the instrument cluster and/or a system voltage display in the driver information center. These will indicate the current vehicle system voltage.

As the charging systems works to maintain the battery charge and manage vehicle electrical loads, it is normal for the voltmeter gauge on the instrument cluster or the system voltage display in the driver information center to fluctuate or change. This does not indicate a malfunction. Depending on the battery state of charge and the vehicle electrical load, these values may be anywhere from 12.5 V to 15.5 V.

Electrical Power Management Description and Operation

Electrical Power Management

The electrical power management is used to monitor and control the charging system and alert the driver of possible problems within the charging system. The electrical power management system makes the most efficient use of the generator output, improves the battery state-of-charge, extends battery life, and manages system electrical loads.

The load shed operation is a means of reducing electrical loads during a low voltage or low battery state-of-charge condition.

The idle boost operation is a means of improving generator performance during a low voltage or low battery state-of-charge condition.

Each electrical power management function, either idle boost or load shed, is activated in incremental steps. For example, idle boost 1 must be active before idle boost 2 can be active. The criteria used by the body control module (BCM) to regulate electrical power management are outlined below:

Idle Boost and Load Shed With Current Sensor

Function	Battery Temperature Calculation	Battery Voltage Calculation	Amp-Hour Calculation	Action Taken
Idle Boost 1 Start	Less Than −15°C (5°F)	Less Than 13 V	—	First level Idle boost requested
Idle Boost 1 Start	—	—	Battery has a net loss greater than 0.6 Ah	First level Idle boost requested
Idle Boost 1 Start	—	Less Than 11 V	—	First level Idle boost requested
Idle Boost 1 End	Greater Than −10°C (14°F)	Greater Than 12 V	Battery has a net loss less than 0.2 Ah	First level Idle boost request cancelled
Idle Boost 2 Start	—	—	Battery has a net loss greater than 1.6 Ah	Second level Idle boost requested
Idle Boost 2 Start	—	Less Than 11 V	—	Second level Idle boost requested
Idle Boost 2 End	—	Greater Than 12 V	Battery has a net loss less than 0.8 Ah	Second level Idle boost request cancelled
Load Shed 1 Start	—	—	Battery has a net loss of 4 Ah	Rear Defrost, Heated Mirrors, Heated Seats, HVAC cycled OFF for 20% of their cycle
Load Shed 1 Start	—	Less Than 11 V	—	Rear Defrost, Heated Mirrors, Heated Seats, HVAC cycled OFF for 20% of their cycle
Load Shed 1 End	—	Greater Than 12 V	Battery has a net loss of less than 2 Ah	Clear Load Shed 1
Idle Boost 3 Start	—	—	Battery has a net loss of 10 Ah	Third level Idle boost requested
Idle Boost 3 Start	—	Less Than 11 V	—	Third level Idle boost requested
Idle Boost 3 End	—	Greater Than 12 V	Battery has a net loss of less than 6.0 Ah	Third level Idle boost request cancelled
Load Shed 2 Start	—	—	Battery has a net loss greater than 12 Ah	Rear Defrost, Heated Mirrors, Heated Seats, HVAC cycled OFF for 50% of their cycle. The BATTERY SAVER ACTIVE message will be displayed on the DIC
Load Shed 2 Start	—	Less Than 11 V	—	Rear Defrost, Heated Mirrors, Heated Seats, HVAC cycled OFF for 50% of their cycle. The BATTERY SAVER ACTIVE message will be displayed on the DIC
Load Shed 2 End	—	Greater Than 12 V	Battery has a net loss of less than 8 Ah	Clear Load Shed 2
Load Shed 3 Start	—	Less Than 11.9 V	Battery has a net loss greater than 20 Ah	Rear Defrost, Heated Mirrors, Heated Seats, HVAC cycled OFF for 100% of their cycle. The BATTERY SAVER ACTIVE message will be displayed on the DIC

Function	Battery Temperature Calculation	Battery Voltage Calculation	Amp-Hour Calculation	Action Taken
Load Shed 3 Start	—	Less Than 11 V	—	Rear Defrost, Heated Mirrors, Heated Seats, HVAC cycled OFF for 100% of their cycle. The BATTERY SAVER ACTIVE message will be displayed on the DIC
Load Shed 3 End	—	Greater Than 12.6 V	Battery has a net loss of less than 13 Ah	Clear Load Shed 3

Idle Boost and Load Shed Without Current Sensor (based on battery voltage)

Function	Battery Temperature Calculation	Battery Voltage Calculation	Action Taken
Idle Boost 1 Start	Less Than −15°C (5°F)	Less Than 13 V	First level Idle boost requested
Idle Boost 1 Start	—	Less Than 12.6 V	First level Idle boost requested
Idle Boost 1 End	Greater Than −15°C (5°F)	—	First level Idle boost request cancelled
Idle Boost 1 End	—	Greater Than 13 V	First level Idle boost request cancelled
Idle Boost 2 Start	—	Less Than 12.4 V	Second level Idle boost requested
Idle Boost 2 End	—	Greater Than 12.5 V	Second level Idle boost request cancelled
Load Shed 1 Start	—	Less Than 12.3 V	Rear Defrost, Heated Mirrors, Heated Seats, HVAC cycled OFF for 20% of their cycle
Load Shed 1 End	—	Greater Than 12.4 V	Clear Load Shed 1
Idle Boost 3 Start	—	Less Than 10 V	Third level Idle boost requested
Idle Boost 3 End	—	Greater Than 12.3 V	Third level Idle boost request cancelled
Load Shed 2 Start	—	Less Than 12.1 V	Rear Defrost, Heated Mirrors, Heated Seats, HVAC cycled OFF for 50% of their cycle. The BATTERY SAVER ACTIVE message will be displayed on the DIC
Load Shed 2 End	—	Greater Than 12.2 V	Clear Load Shed 2
Load Shed 3 Start	—	Less Than 11.9 V	Rear Defrost, Heated Mirrors, Heated Seats, HVAC cycled OFF for 100% of their cycle. The BATTERY SAVER ACTIVE message will be displayed on the DIC
Load Shed 3 End	—	Greater Than 12.0 V	Clear Load Shed 3

Starting System Description and Operation

Starter Motor Operation (Without KL9)

The starter motors are non-repairable. They have pole pieces that are arranged around the armature. Both solenoid windings are energized. The pull-in winding circuit is completed to the ground through the starter motor. The windings work together magnetically to pull and hold in the plunger. The plunger moves the shift lever. This action causes the starter drive assembly to rotate on the armature shaft spline as it engages with the flywheel ring gear on the engine. Moving at the same time, the plunger also closes the solenoid switch contacts in the starter solenoid. Full battery voltage is applied directly to the starter motor and it cranks the engine.

As soon as the solenoid switch contacts close, current stops flowing thorough the pull-in winding because battery voltage is applied to both ends of the windings. The hold-in winding remains energized. Its magnetic field is strong enough to hold the plunger, shift lever, starter drive assembly, and solenoid switch contacts in place to continue cranking the engine. When the engine starts, pinion overrun protects the armature from excessive speed until the switch is opened.

When the crank signal is removed, the starter relay opens and battery voltage is removed from the starter solenoid S terminal. Current flows from the motor contacts through both windings to the ground at the end of the hold-in winding. However, the direction of the current flow through the pull-in winding is now opposite the direction of the current flow when the winding was first energized.

The magnetic fields of the pull-in and hold-in windings now oppose one another. This action of the windings, along with the help of the return spring, causes the starter drive assembly to disengage and the solenoid switch contacts to open simultaneously. As soon as the contacts open, the starter circuit is turned off.

Enhanced Starter Motor Operation (KL9)

The Engine Stop/Start system in GM vehicles automatically turns off the engine when the vehicle comes to a stop under certain driving conditions, and can quickly restart the engine in about 0.3 seconds when commanded to do so.

In order to smoothly restart the engine as quickly as possible while managing the greater number of engine starts, the Stop/Start system uses an enhanced starter motor that operates differently from a conventional starter motor. It has a high performance electric motor and a stronger pinion engagement mechanism than a conventional starter. It also has independent control of the pinion and motor.

The enhanced starter motor continues using the typical pinion engagement mechanism with a starter solenoid that drives the pinion gear to engage or disengage the flywheel of the engine. When engaged, the starter motor can rotate the engine flywheel and, in turn, the crankshaft.

On the enhanced starter of a Stop/Start system the operation is done in two separate functions inside the solenoid, Starter Motor and Pinion Actuator. Each function controlled individually by the ECM. There are two separate relays to control the two separate parts of the enhanced solenoid:

- KR27 Starter Motor Relay
- KR27C Starter Pinion Actuator Relay

The two individually-controlled relays allow for smooth engagement of the pinion gear into the flywheel with minimum noise and wear.

When the vehicle is coming to a stop, just before the engine stops rotating (at approximately 50 RPM) during stop/start operation, the ECM energizes the Starter Pinion Solenoid Actuator Relay to easily push the pinion gear into the flywheel gear without gear clash. (Fig. 8) When the engine stops rotating during Stop/Start operation (Auto Stop mode), the starter pinion gear is fully engaged, ready for the starter motor to become energized to quickly start the engine again.

A secondary need for the starter pinion to be driven into the flywheel gear before the engine stops rotating is to address quickly changing demands on the engine. For example, when a driver is slowing nearly to a stop — and the Stop/Start system is preparing for Auto Stop mode — but suddenly decides to release the brake and accelerate

In this situation, the engine has already stopped rotating, or nearly so. A conventional starter cannot restart the engine until the engine has completely stopped. However, with the enhanced starter, the starter pinion gear is fully engaged and ready to begin rotating the engine even before it fully stops turning. Otherwise, the engine would actually have to stop rotating before the pinion can engage smoothly to begin a restart.

To prevent a lag in engine operation, the ECM uses predictive speed matching of the flywheel gear speed and the pinion gear speed to engage the pinion gear into the flywheel gear without gear clash before the engine fully stops. By predicting how long it takes the starter motor to spin up using an algorithm, the pinion gear speed can be matched to the flywheel gear speed. The result is an almost instant restart that is possible at extremely low engine speeds.

Ignition Switch

Keyless Start

When the Ignition mode switch is placed in the crank position, a discrete signal is supplied to the body control module (BCM) notifying it that the ignition is in the crank position. The BCM then sends a serial data message to the engine control module (ECM) that crank has been requested. The ECM then verifies that the brake pedal is applied and for manual transmission the clutch is fully depressed or for automatic transmission is in Park/Neutral. If it is, the ECM then supplies 12 V to the control circuit of the starter relay. When this occurs, battery positive voltage is supplied through the switch side of the crank relay to the S terminal of the starter solenoid.

Key Start

When the ignition switch is placed in the Start position, a discrete signal is supplied to the body control module (BCM) notifying it that the ignition is in the Start position. The BCM then sends a message to the engine control module (ECM) notifying it that CRANK has been requested. The ECM verifies that the transmission is in Park or Neutral. If it is, the ECM then supplies 12 V to the control circuit of the crank relay. When this occurs, battery positive voltage is supplied through the switch side of the crank relay to the S terminal of the starter solenoid.

Stop/Start System Description and Operation

The Stop/Start System is used to improve fuel efficiency in stop/start driving. The vehicle automatically shuts down the engine in appropriate conditions at a traffic light, for example, resulting in zero tail pipe emissions and saving fuel which otherwise is used idling the engine when stationary. The engine instantly restarts when the driver is ready to move away.

As soon as the driver prepares to move away (by releasing the brake pedal and/or depressing the accelerator pedal), the engine will start; it only takes the system around 0.3 s to start the engine.

To support the increased number of engine starts, the starter motor is upgraded with a high performance electric motor and a stronger pinion engagement mechanism with reduced noise levels.

Along with the upgraded starter motor, advanced battery technology is required to ensure the vehicles battery can handle the frequent charge and discharge cycles common with stop/start operation. There is battery sensor module connected to the battery which continually monitors the battery charge and healthy state. The Engine Control Module (ECM) uses this information from the battery sensor module to determine if the battery charge and health is sufficient for an Stop/Start condition.

The Stop/Start system can reduce fuel consumption and carbon dioxide (CO_2) emissions by up to 5% in mixed driving conditions. In an urban environment and in heavy traffic with frequent stops the savings may increase to as much as 10%.

There are also sophisticated controls in place to help ensure the Stop/Start System does not compromise the needs of either the driver or vehicle. For the engine to shutdown, the vehicle must be below 5 km/h (3 MPH), the selector lever in position D, and brake pedal depressed. To restart, the driver simply releases the brake pedal and the enhanced starter motor engages the engine. When the engine has been shut down by the Stop/Start System, a control indicator will be illuminated in the Driver Information Center (DIC). When the engine is restarted, the control indicator in the DIC extinguishes.

To ensure neither the needs of the driver or vehicle are compromised the engine will not shut down in the following circumstances:

- Ambient and coolant temperature correlation does not match specified values.
- Ambient temperature is less than −10°C (14°F)
- Battery temperature is less than 0°C (32°F) or greater than 55°C (131°F)
- Driver seat belt is not fastened and the drivers door is not fully closed (not applicable to vehicles in North America)
- HVAC system demand is high
- HVAC defrost has been selected
- Battery charge is low

Likewise the engine will automatically restart if:

- Driver door opened and driver seat belt unbuckled (not applicable to vehicles in North America)
- Engine hood opened
- Battery charge is low
- HVAC demand increases
- Vehicle speed increases
- Brake booster vacuum has been reduced
- Engine coolant temperature is greater than 125°C (257°F)
- Economy mode turned OFF by driver
- Autostop time exceeded 2 min

When the Stop/Start System has shut down the engine, and the ambient temperature is below 15°C (59°F), the ECM will activate the Stop/Start auxiliary relay which controls the electric engine coolant pump motor to continually circulate the engine coolant through the engine while the engine is off. This is to ensure the engine and passenger compartment temperature is maintained while off. Once the Stop/Start System has restarted the engine, the ECM will turn off the electric coolant pump motor, thus allowing the engines internal coolant pump to circulate the engine coolant. The Stop/Start System is automatically activated each time the ignition switch is turned on.

Through the climate control system, the vehicle can be cycled between off, comfort, and eco air conditioning modes (if equipped). In comfort mode, the priority for Stop/Start operation is on customer comfort. Depending on ambient temp, humidity, cabin temperature and cabin temperature setpoint, the least amount of autostops occur in this mode. In eco mode, the priority is on fuel economy. There are more frequent autostops with some sacrificing of cabin temperature control. With the HVAC turned off, the maximum autostops occur since there will be no A/C compressor requests.

Autostop Criteria

The ECM will send an Autostop state message to the body control module (BCM) and shut down the engine when all of the following criteria is met. The BCM will transmit the Autostop state message to the instrument cluster which will display the Autostop indicator in the tachometer display.

- Initial minimum vehicle speed during drive cycle must be 19 km/h (12 MPH) or greater. Subsequent autostop minimum speed may vary from 2-10 km/h (1-6 MPH), depending on vehicle
- Ambient and engine coolant temperature correlation meets specified values.
- Ambient and transmission fluid temperature correlation meets specified values.
- Hood switch status is closed
- Driver door status is closed
- Driver seat belt status is buckled
- Brake booster vacuum is greater than 45 kPa (7 PSI)
- Transmission gear selector is in the Drive position
- Vehicle speed is less than 5 km/h (3 MPH)
- Engine speed is below 1,500 RPM
- Engine coolant temperature is less than 120°C (248°F)
- Ambient temperature is greater than −10°C (14°F)
- No A/C compressor request from HVAC (A/C or Defrost modes)
- Battery voltage greater than 12 V
- Battery state of charge greater than 75% (changes with state of health)

Autostop Enable Ambient and Engine Coolant Temperature Table

Ambient Temperature	inimum Coolant Temperature	Autostop Enable
−10°C (14°F)	60°C (140°F)	Yes
0°C (32°F)	50°C (122°F)	Yes
6°C (43°F)	40°C (104°F)	Yes
12°C (54°F)	30°C (86°F)	Yes
20°C (68°F)	18°C (64°F)	Yes
30°C (86°F)	18°C (64°F)	Yes

Autostart Criteria

The ECM will send an Autostart state message to the BCM. If all of the following conditions are true the ECM and BCM will restart the vehicle.

Driver Enabled Conditions that will engage Autostart:

- Driver removes pressure from the brake or depresses the accelerator pedal while the vehicle is in the forward Drive gear

System Enabled Conditions that will engage Autostart

Note: If one or more of the following conditions occur, the system will force the engine to restart.

- Brake booster vacuum is less than 40 kPa (6 PSI)
- A/C compressor request from HVAC (A/C or Defrost modes)
- Battery voltage less than 11 V,
- Battery state of charge is less than 73% (changes with state of health)

- Driver door status changes to open and driver seat belt status changes to unbuckled (not applicable to vehicles in North America)
- Hood switch status changes to open
- Autostop time exceeded 2 min

If the crank time exceeds 2 s, a manual ignition switch restart will be necessary.

System Components

Engine Control Module (ECM)
The ECM monitors the inputs from the Engine Coolant Temperature (ECT) sensor, Vehicle Speed Sensor (VSS), Battery Sensor Module, hood ajar switch, brake booster vacuum sensor, and engine speed to determine Autostart and Autostop conditions. The ECM also controls the auxiliary coolant pump motor (if equipped).

Transmission Control Module (TCM)
The TCM monitors the inputs from the transmission neutral safety switch to determine the driver selected gear. This information is transmitted to the ECM via serial data to support the Auto Stop Start algorithm.

Engine Coolant Temperature sensor (ECT)
The ECT sensor is used to determine engine operating temperature.

Intake Air Temperature Sensor (IAT)
The ECM uses this sensor to monitor ambient air temperature. If too cold, the Autostop will not occur.

Inside air temperature sensor
The HVAC control module monitors the passenger compartment temperature sensor to determine the temperature inside the passenger compartment. The HVAC control module sends this temperature reading to the ECM on the data communication circuit. The ECM uses this temperature values to determine if a restart is requires based on the temperature inside the passenger compartment.

Vehicle speed sensor
The vehicle speed sensor is used to determine vehicle speed. If vehicle speed is detected above a calculated value during an Autostop condition, the ECM will start the engine.

Hood Ajar Switch
If the hood switch is in the open position, the vehicle will not Autostop. If the hood is opened during Autostop, the vehicle will automatically restart.

Brake Booster Vacuum Sensor
The ECM monitors vacuum in order to ensure proper power assist for the brake pedal. If the ECM determines vacuum is too low, it will restart the engine.

Brake Pedal Position Sensor (BPPS) & Accelerator Pedal Position Sensor (APP)
The ECM monitors both the brake pedal position sensor and the accelerator pedal position sensor to determine the level of activation for each. While the accelerator pedal is in it's at rest position with no pressure applied by the operator, a partially depressed Brake pedal will cause the ECM to prepare the engine for an Autostop event. When the vehicle is in an auto stop event and the status of the brake pedal position sensor changes from meeting the autostop criteria to not meeting this criteria the engine will be restarted provided all of the other conditions to allow an autostart are met. If the Accelerator pedal is moved from its at rest position the vehicle will also enter an auto start event if all other conditions to support an autostart event, except for the brake pedal position, are met.

Transmission Gear Shift Position Switch
The transmission gear shift position switch is used to determine if the transmission is in the proper state to allow an auto stop/start event. The ECM will not allow Autostop until the brake is engaged, the transmission is in the forward gear position and then the vehicle slows to below the minimum speed required to allow and autostop while meeting all of the other minimum criteria to support an autostop event.

Coolant Pump Motor
The ECM will turn on the auxiliary coolant pump motor during Autostop to maintain engine operating temperature and HVAC temperature. Once the engine is running, the ECM will turn off the coolant pump motor.

Body Control Module (BCM)
The Body Control Module (BCM) monitors the Autostop Disable switch in order to enable or disable the system. It sends the appropriate messages to the ECM Via serial data to enable or disable the system.

Battery Sensor Module
The Battery Sensor Module monitors the battery current load, state of health, and state of charge, the information is sent to the BCM Via LIN then to the ECM Via Serial Data. If the module detects high current load, the battery is in a poor state of health or a low charge condition, the ECM will not allow Autostop to occur.

Autostop Disable Switch
The disable switch is an input to the BCM, it allows the customer to disable or re-enable the Autostop system. After the vehicle is turned off the Autostop system will turn back on the next time the vehicle is started.

Power Supply Transformer
The DC to DC converter monitors battery voltage and will maintain operating voltage to the radio, instrument cluster and instrument panel displays. The DC to DC converter will provide a boosted voltage to sensitive

loads during Autostart to ensure proper operation of the driver informational displays.

Instrument Cluster

In order to differentiate between a normal engine shut down (engine speed 0 RPM) and when the engine has been shut down by the Stop/Start System, the tachometer needle will rest at the Autostop indicator icon (500 RPM point) indicating the engine has been shut down by the Stop/Start System. Once the engine is restarted, or the ECO button has disengaged Autostop, the tachometer will function normally.

Section 5

HVAC

HVAC - Automatic **5-2**
Schematic and Routing Diagrams **5-2**
HVAC Schematics 5-3
Description and Operation **5-13**
Automatic HVAC Description and Operation 5-13

HVAC

HVAC - Automatic

Schematic and Routing Diagrams

HVAC Schematics (HVAC Controls)

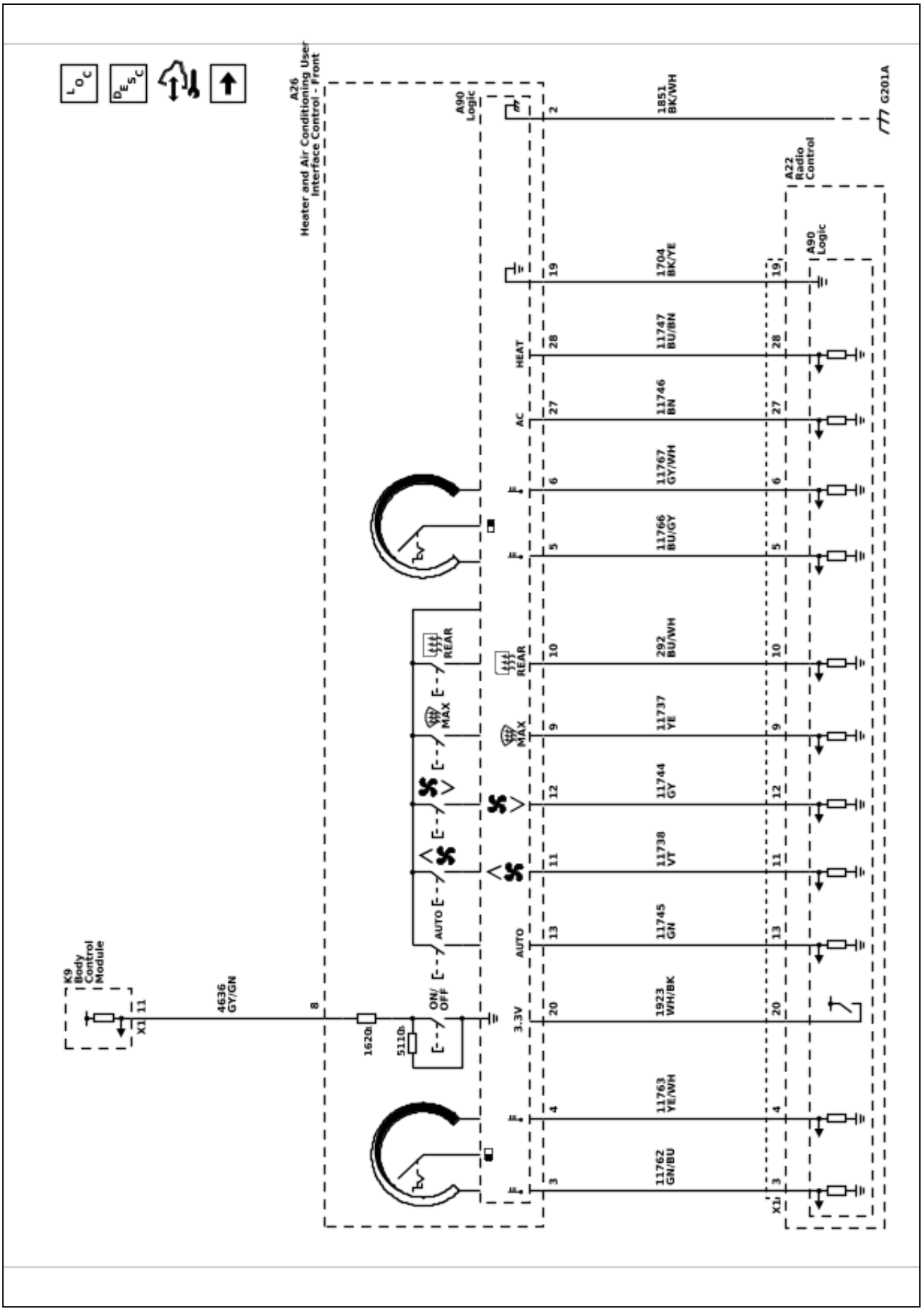

HVAC Schematics (HVAC Controls - Backlighting, Indicators, and Display)

6613498

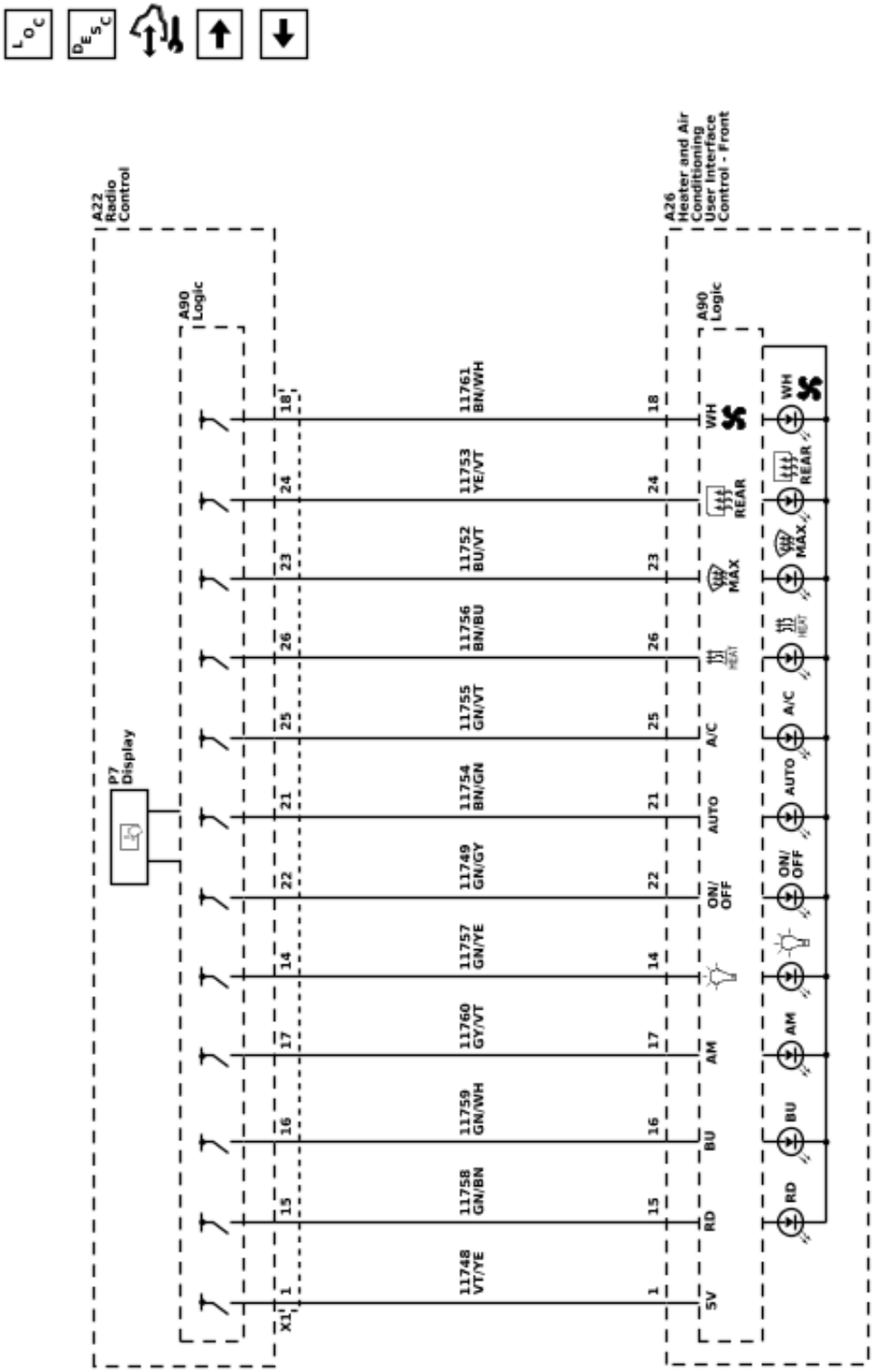

HVAC Schematics (Front Mode and Temperature Valve Actuators)

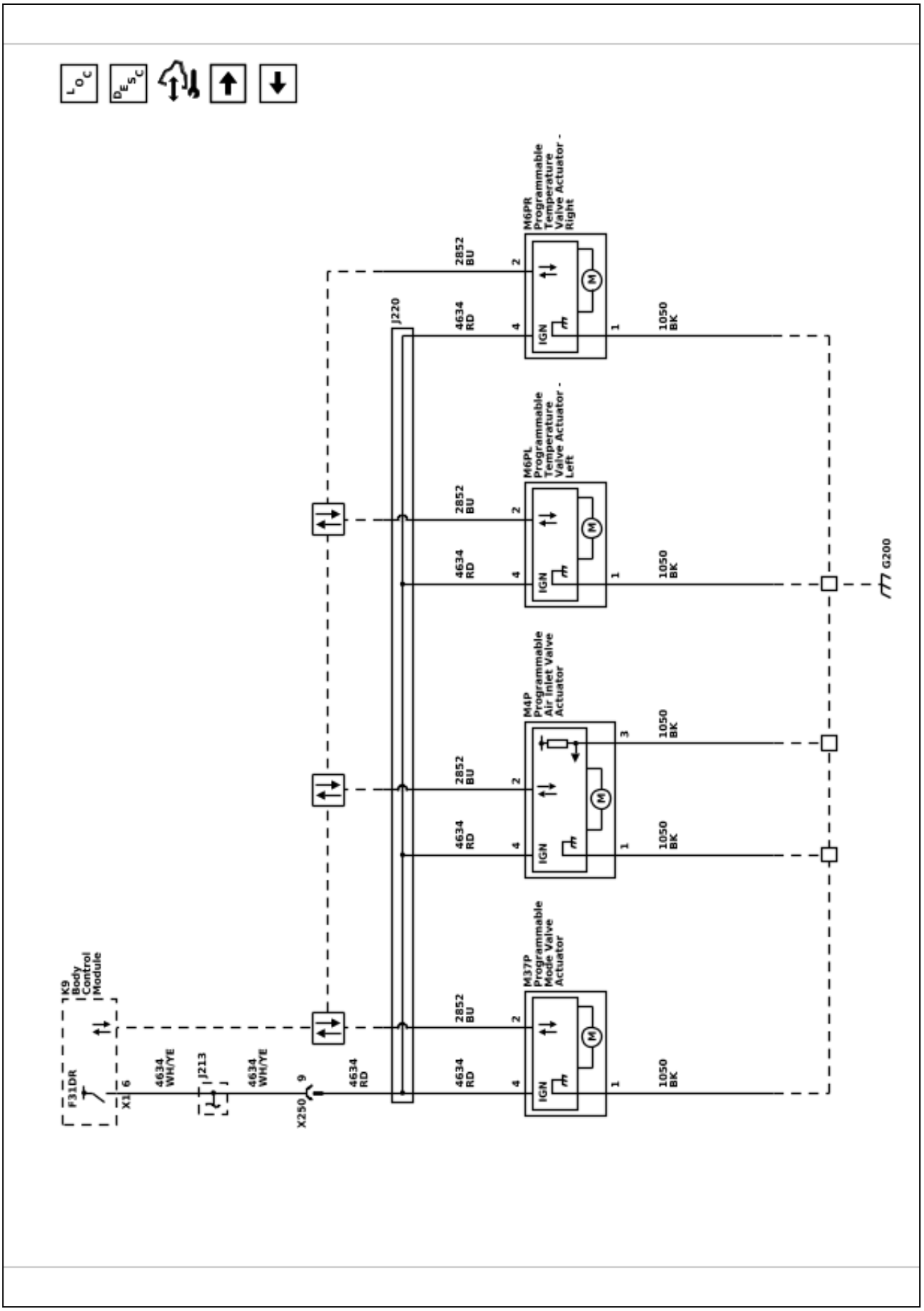

6613403

6613404

HVAC Schematics (Front Blower Motor)

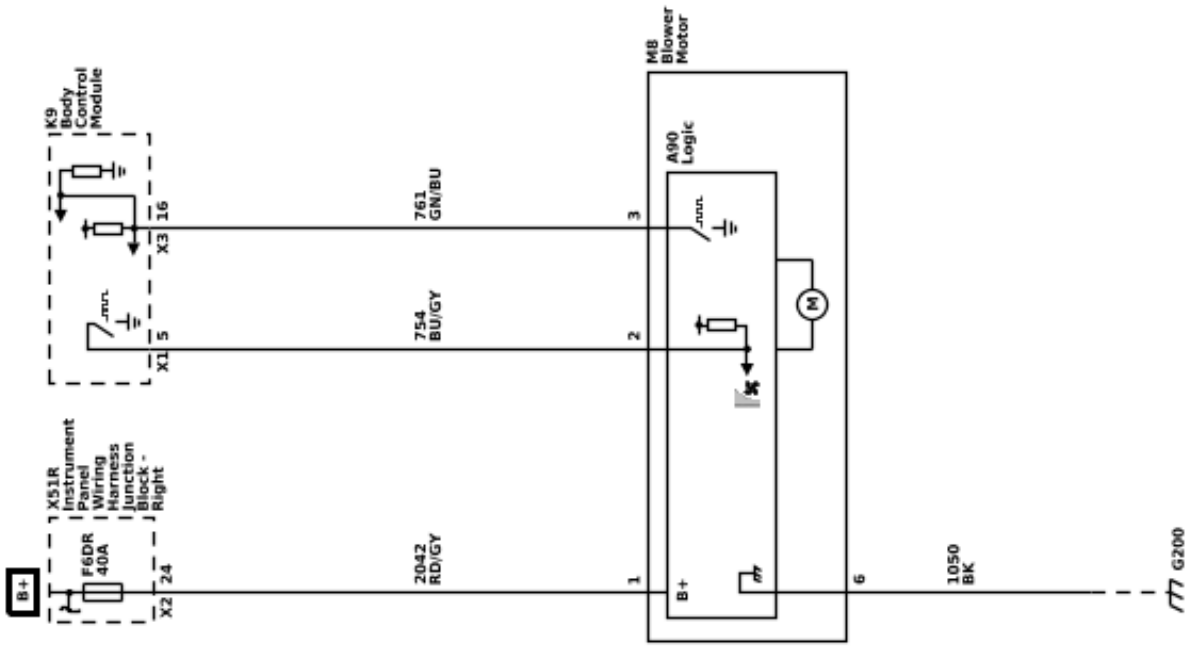

HVAC Schematics (Ambient Light/Sunload Sensor, Windshield Moisture Sensor, and A/C Evaporator Temperature Sensor)

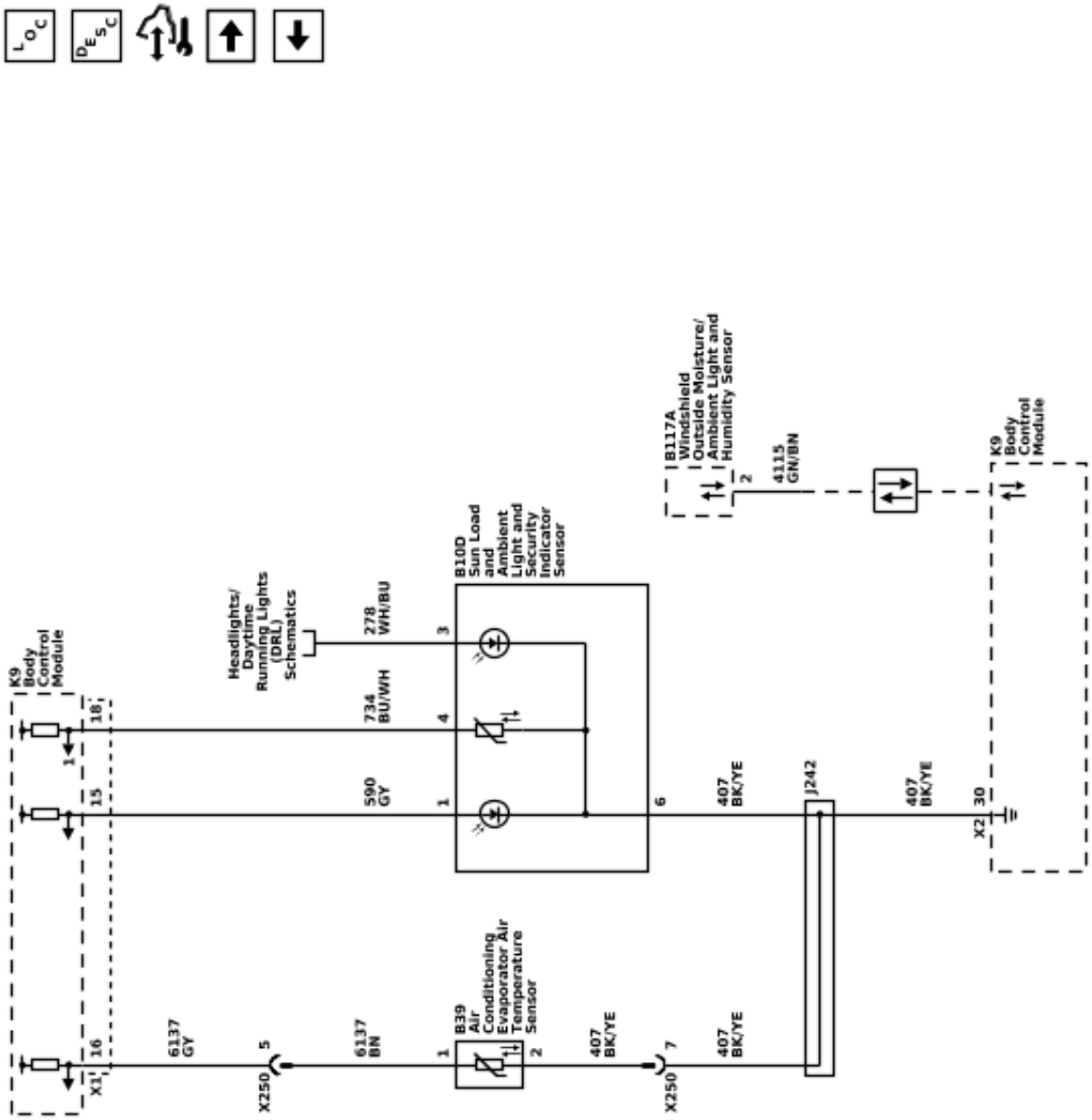

6613405

HVAC Schematics (A/C Compressor Controls (L84 / L87))

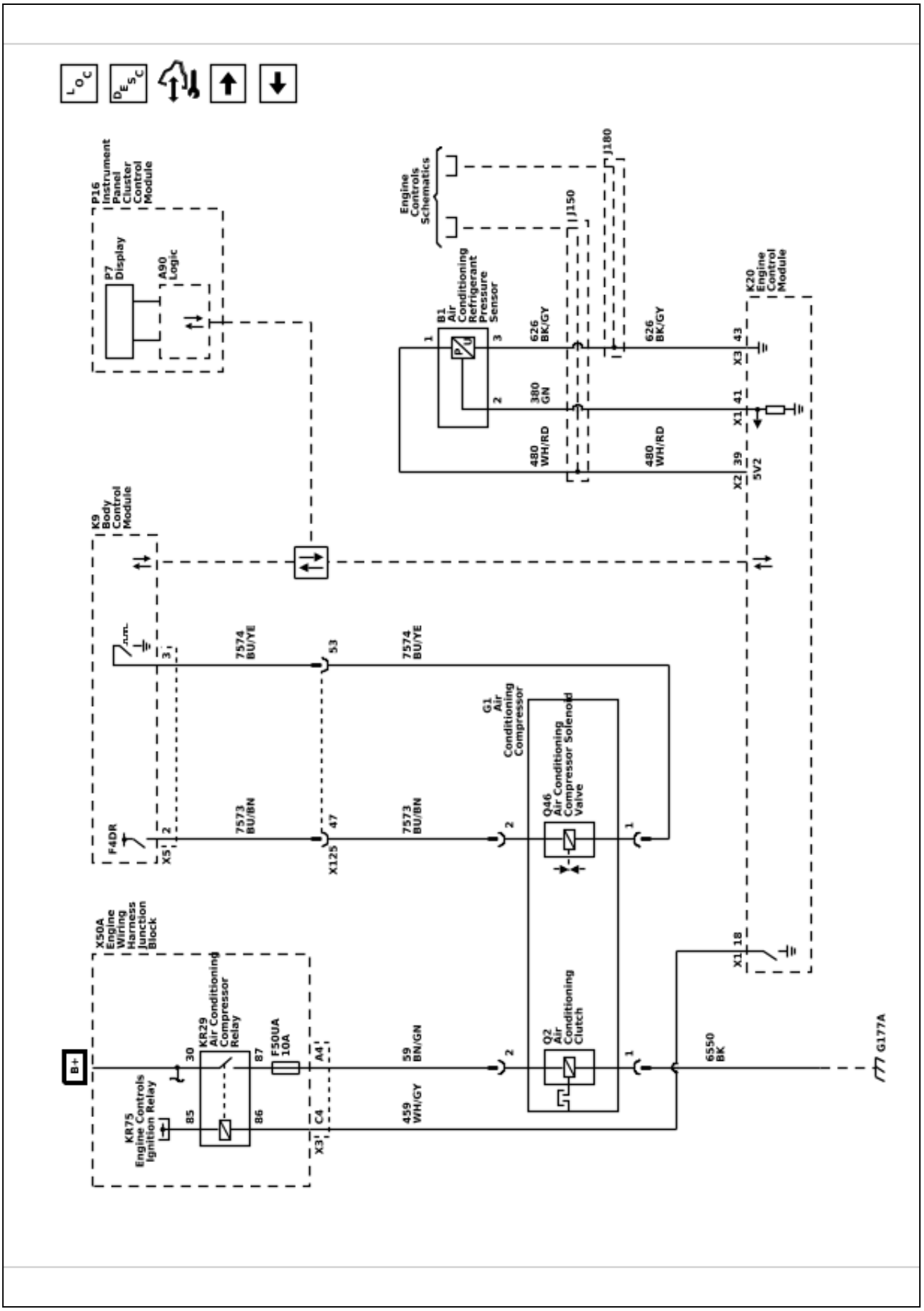

HVAC Schematics (A/C Compressor Controls (LZ0))

6613407

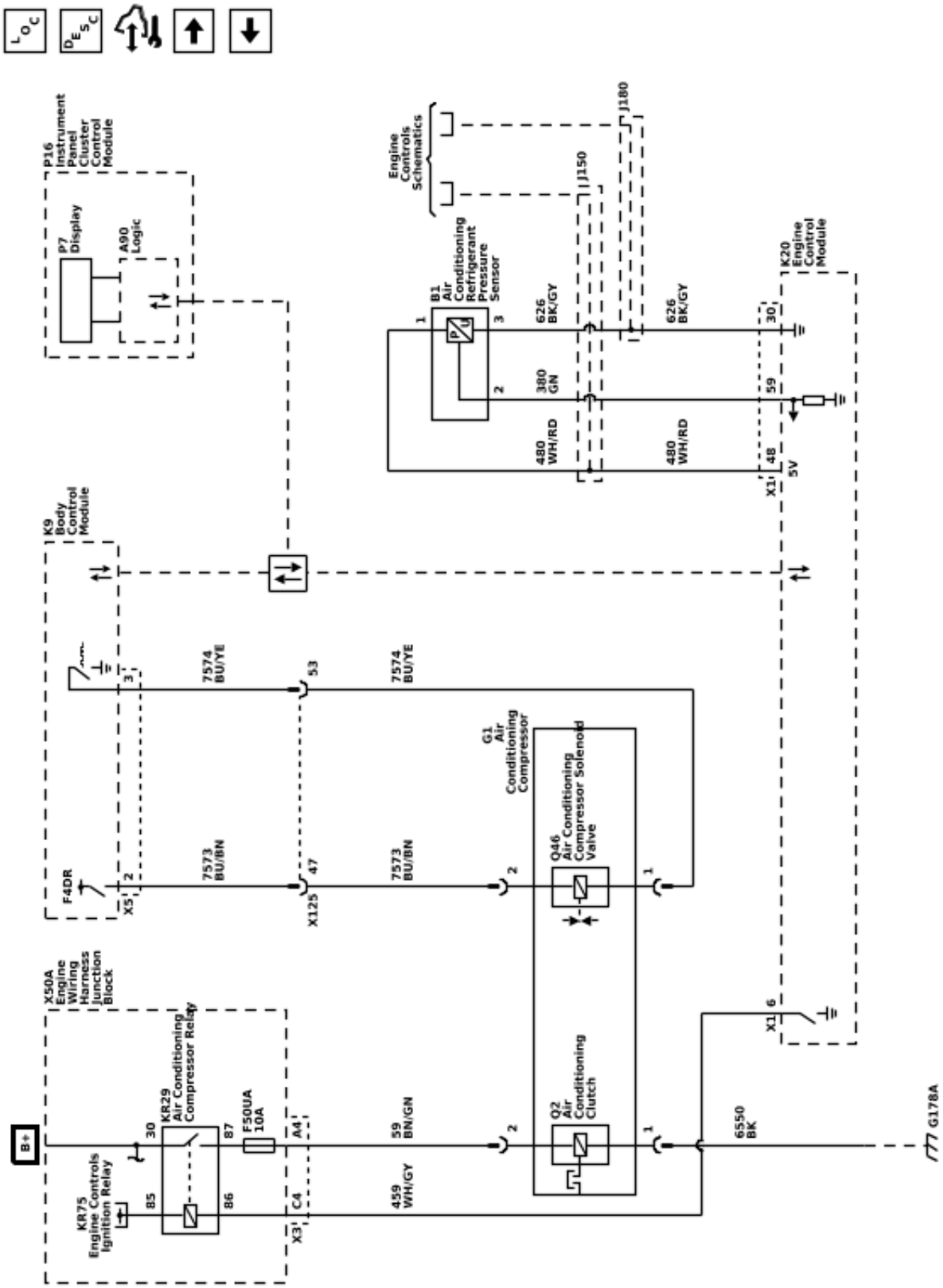

HVAC Schematics (Auxiliary HVAC Controls Power, Ground, and Serial Data)

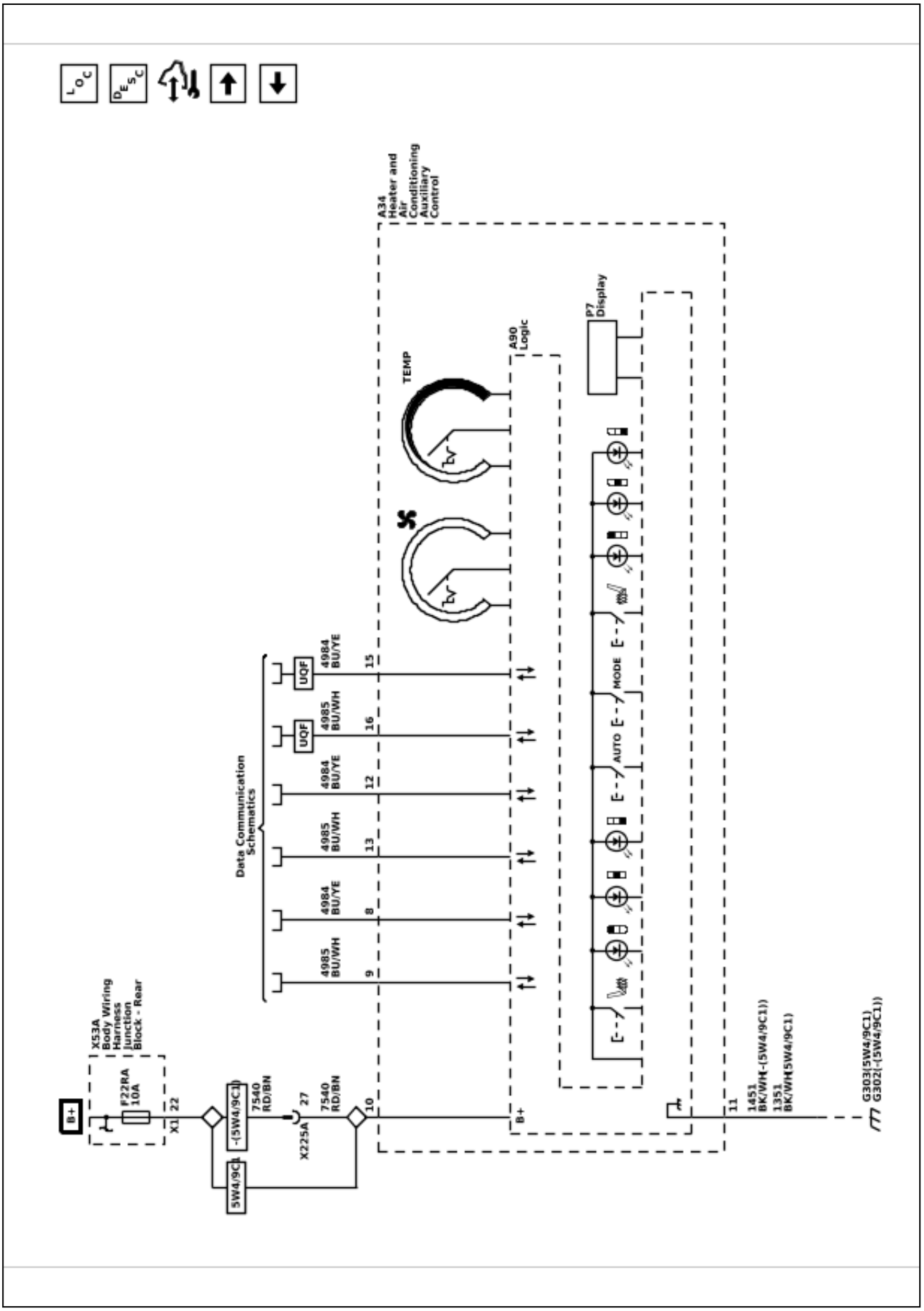

HVAC Schematics (Auxiliary HVAC Blower Motor, Mode and Temperature Actuators)

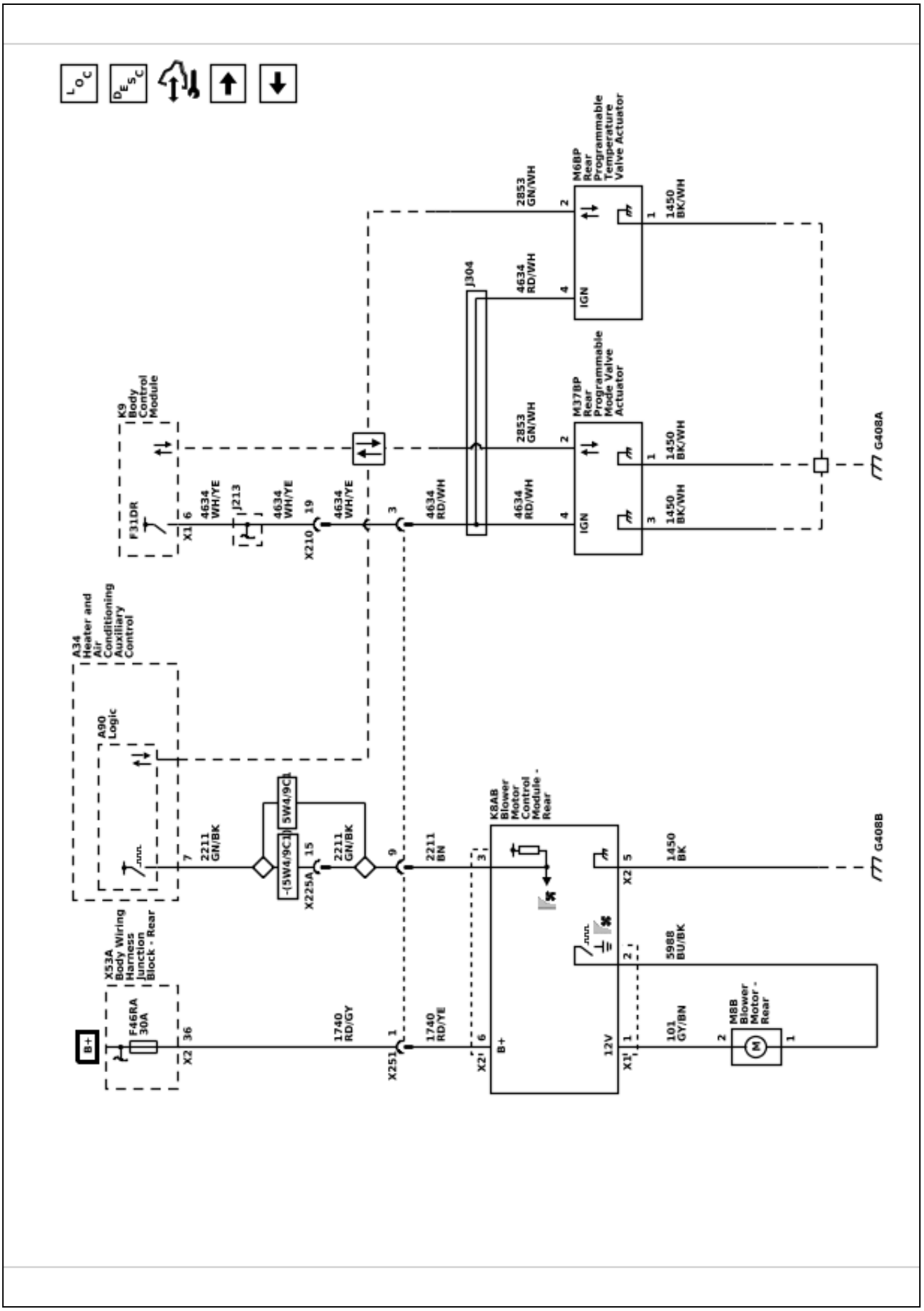

6613410

HVAC Schematics (Air Heater (C3A))

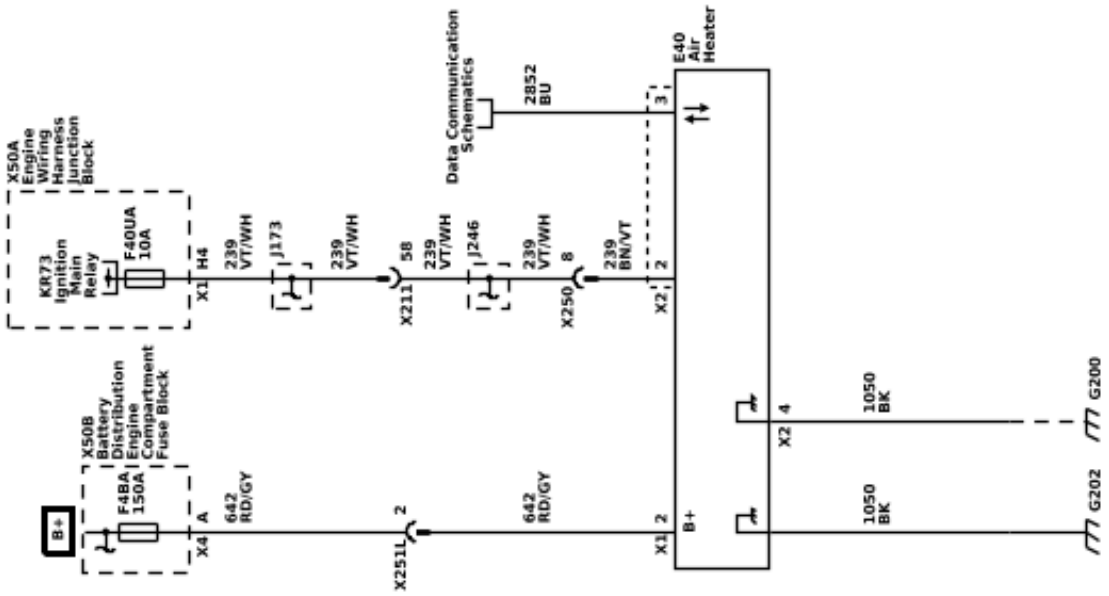

Description and Operation

Automatic HVAC Description and Operation

The air temperature and the air delivery description and operation are divided into the following:

- HVAC Control Components
- Air Speed and Blower Motor (Front)
- Air Speed and Blower Motor (Rear)
- Air Delivery (Front)
- Air Delivery (Rear)
- Heating and A/C Operation
- Recirculation Operation
- Automatic Operation
- Engine Coolant and A/C System Refrigerant

HVAC Control Components

K9 Body Control Module
The body control module (BCM) is a CAN device that interfaces between the operator and the HVAC system to maintain and control desired air temperature and air distribution settings. The BCM provides a device ON-Signal for the HVAC controls. The BCM provides blower, air delivery mode and air temperature control.

A22 Radio Control
The radio control assembly contains the information display/ touchscreen and is the interface between the A26 Heater and Air Conditioning User Interface Control–Front and the vehicle. The selected values are passed to the BCM via serial data.

A26 Heater and Air Conditioning User Interface Control–Front
The HVAC control contains switches and knobs which are used to control the main functions of the HVAC system, with some controls only available through the infotainment display. Individual signal circuits between the A 22 Radio control and the A26 Heater and Air Conditioning User Interface Control–Front are used to communicate control inputs. Indicators and backlighting are also operated through dedicated circuits.

A34 Heater and Air Conditioning Auxiliary Control
The HVAC controls – auxiliary contains all switches, buttons, and dials which are required to control the functions of the rear HVAC system and serve as interface between the operator and the BCM. Mode and temperature selections are passed to the BCM via serial data. Rear blower motor speed is controlled via a signal circuit from the HVAC controls – auxiliary to the blower motor control module- auxiliary.

Actuators (Front)
Doors in the HVAC case assembly are used to control air flow. The BCM operates the doors through the use of actuators, with one actuator being used for each door. The system has the following air control doors and associated actuators: mode, left and right temperature, and recirculation.

Each actuator used in the system is a LIN device controlled by the BCM. The BCM supplies a 12 V reference voltage to the actuators, and ground is provided by the wiring harness. When the BCM sends a request message to the actuator, the actuator then operates internal stepper motors to move the door to the required position.

Actuators Rear
Two additional actuators are used in the system to control the airflow and temperature for the rear seat passengers: rear temperature, and rear mode.

Each actuator is a LIN device controlled by the BCM. The auxiliary HVAC control supplies a 12 V reference voltage to the actuators, and ground is provided by the wiring harness. When the BCM sends a request message to the actuator, the actuator then operates internal stepper motors to move the door to the required position.

Air Speed and M8 Blower Motor (Front)
The selected blower motor speed is passed from the controls to the BCM via serial data.

The motor uses a fused B+, ground, control, and speed output signal circuits to operate. The blower motor speed is controlled by increasing or decreasing the voltage drop on the ground side of the blower motor speed control circuit. The BCM provides a low side pulse width modulation (PWM) signal to the blower motor to request a specific motor speed. The blower motor internal circuitry translates the PWM signal and drives the motor accordingly.

The blower motor has a signal wire used to output a speed signal. The signal is monitored by the BCM. The BCM monitors the blower motor speed to modify the total commanded engine coolant flow rate, which is a percentage of available coolant flow sent to the heater core for occupant comfort and windshield defrosting. The HVAC Blower Speed is monitored so that the ECM can optimize engine coolant flow for fuel economy and emissions.

Afterblow
Afterblow is a feature that dries the evaporator core by operating the blower motor after the engine is turned OFF under certain conditions. This reduces the amount of microbial growth that can create undesirable odors. For additional information on afterblow, the default setting, and changing the setting, refer to [Link target (target-id 328146-) not found] .

Air Speed and M8B Blower Motor — Rear
An auxiliary blower motor is used to regulate the air speed from the rear passenger ducts. The rear blower

speed may be selected from the front or rear HVAC controls. The selected value is sent to the A34 HVAC Controls – Auxiliary via serial data.

The K8 Blower Motor Control Module — Auxiliary controls the speed of the rear blower motor by increasing or decreasing the voltage drop on the ground side of the blower motor. The A34 HVAC Controls – Auxiliary provides a low side pulse width modulation (PWM) signal to the blower motor control module — auxiliary via the blower motor speed control circuit. As the requested blower speed increases, the HVAC controls — auxiliary increases the amount of time that the speed signal is modulated to ground. As the requested blower speed decreases, the amount of time that the signal is modulated to ground decreases.

Duct Air Temperature
Physical duct air temperature sensors are not used with the system. The air temperature in the air distribution ducts is calculated by the BCM based on the engine coolant temperature, coolant flow, evaporator temperature, outside air temperature, solar load, blower motor speed, air inlet door position, and temperature door position information. The BCM uses the values to calculate actuator position.

B39 Air Conditioning Evaporator Air Temperature Sensor
The evaporator temperature sensor is a 2-wire negative temperature coefficient thermistor. The sensor operates within a temperature range of −40 to +85°C (−40 to +185°F). The sensor is installed near the evaporator core to measure the air temperature exiting the core.

Based on vehicle operating conditions and operator settings, the HVAC software algorithms will determine a target evaporator air temperature. The operation of the compressor solenoid will be adjusted as needed to quickly reach and maintain the targeted temperature.

B1 Air Conditioning Refrigerant Pressure Sensor
The A/C refrigerant pressure sensor is a 3-wire piezoelectric pressure transducer. A 5 V reference voltage, low reference, and signal circuits enable the sensor to operate. The A/C pressure signal can be between 0.2–4.8 V. When the A/C refrigerant pressure is low, the signal value is near 0 V. When the A/C refrigerant pressure is high, the signal value is near 5 V. The engine control module (ECM) converts the voltage signal to a pressure value. When pressure is too high or too low, the ECM will not allow the A/C compressor clutch to engage.

G1 Air Conditioning Compressor
The A/C compressor uses a conventional belt driven magnetic clutch to engage and mechanically turn the compressor. When the A/C switch is pressed, the BCM sends an A/C request message to the ECM via serial data. If specific criteria is met, the ECM then grounds the A/C compressor clutch relay control circuit, which will switch the A/C compressor clutch relay. With the relay contacts closed, battery voltage is supplied to the permanently grounded A/C compressor clutch. The A/C compressor clutch will then be activated.

This A/C system utilizes a variable displacement solenoid valve to alter the amount of displacement created by the turning of the compressor. The BCM provides both battery voltage and a pulse width modulated ground to the Q46 Air Conditioning Compressor Solenoid Valve. When the A/C switch is pressed, the BCM grounds the variable displacement solenoid using a (PWM) signal in order to determine the amount of compressor displacement. The performance of the A/C compressor is regulated based on cooling load.

B117A Windshield Outside Moisture/Ambient Light and Humidity Sensor (CE1)
The windshield outside moisture, ambient light, and humidity sensor is used by the wiper system to determine exterior moisture, and by the HVAC system for inside windshield temperature and humidity.

The sensors are part of a LIN windshield sensor array, and the sensor values are transmitted to the BCM via serial data.

This sensor assembly provides information to the HVAC system about:

- Relative humidity level at windshield (passenger compartment side)
- Temperature of the windshield (passenger compartment side)
- Temperature of the humidity sensor element

The relative humidity sensor measures the relative humidity of the passenger compartment side of the windshield. It also detects the temperature of the windshield surface on the passenger compartment side. Both values are used as control inputs for the BCM application to calculate the fog risk on windshield compartment side and ability to reduce fuel consumption by decreasing A/C compressor power to a minimum without causing any fog. The sensor will also enable partial recirculation mode in order to improve heat-up performance of the passenger compartment under cold ambient temperature conditions without the risk of mist build-up on the windshield. The humidity sensor element temperature sensor supplies the temperature of the humidity sensor element. It is only needed if the thermal contact between the humidity sensing element and the inside windshield surface is not sufficient.

B10D Sun Load and Ambient Light and Security Indicator Sensor
The ambient light/sunload sensor includes the solar sensor and passenger compartment temperature sensor.

The solar sensor is connected to a low reference and 5 V supply through the BCM. As the sunload increases, the sensor signal voltage also increases and vice versa. The signal provided to the BCM varies between 1.2–4.85 V.

The passenger compartment temperature sensor is a negative temperature coefficient thermistor, connected to a low reference and 5 V supply through the BCM. As the air temperature increases, the sensor resistance decreases. The signal varies between 0–5 V.

Bright or high intensity light can cause the vehicles interior temperature to increase. The HVAC system uses the sensor values and compensates for the increased temperature to maintain the system settings.

E40 Air Heater (C3A)
Some models are equipped with an auxiliary electric heater to assist in warming the passenger compartment when the engine coolant has not sufficiently warmed to operating temperature. The air heater is a LIN device. The heater uses an ignition circuit, battery voltage circuit, ground circuit, and a serial data signal from the BCM to operate.

The heater is a 12 V positive temperature coefficient heating element located in the HVAC case just downstream of the traditional heater core. The system will activate the heater when the outside temperature is less than approximately 8°C (46°F), the engine coolant temperature is less than approximately 75°C (167°F), and the temperature blend door is commanded to the full hot position.

Air Delivery (Front)

The BCM controls the distribution of air by the use of recirculation and mode door actuators. The modes that may be selected are:

- Defrost: windshield outlet
- Panel: dashboard outlets
- Floor: front footwell outlets
- Defog: defrost + floor
- Bi-level: panel + floor
- Tri-level: panel + defrost + floor
- Hi-level: panel + defrost

The desired air distribution mode can be selected with the air distribution switches at the HVAC control. The HVAC control delivers the values to the BCM via serial data. The BCM sends a request to the mode door actuator to move the door to the required position. Depending on the position of the door, air is distributed through various ducts leading to the outlets in the dash. When defrost airflow is active, the BCM will move the recirculation actuator to outside air, to aid in reducing window fogging. When defrost is selected the blower motor will be activated, regardless of the coolant temperature. A/C is available in all modes.

Refer to the owners manual for operation of the HVAC controls and mode selection.

Recirculation Operation
The recirculation switch is integrated into the HVAC control. The selected recirculation setting is sent to the BCM via serial data. The BCM controls the air intake using the recirculation actuator. In recirculation mode the recirculation door is positioned to block outside air from entering and circulate the air within the vehicle. In outside air mode the recirculation door is positioned to route outside air into the vehicle.

Recirculation is only available if the defrost mode is not active. When the defrost mode is active, the recirculation actuator positions the recirculation door so that outside air is circulated to the windshield to reduce fogging.

In automatic mode the values of the sensors are used as inputs for the BCM to calculate the fog risk on the passenger compartment side of the windshield. The A/C compressor and the defrost mode may be activated to prevent or remove fog on the passenger compartment side of the windshield.

In automatic mode, a partial recirculation mode may be commanded to accelerate cabin heating or cooling and reduce energy usage. The recirculation indicator remains illuminated at all times, regardless of the actual operating mode determined by the system.

Air Delivery (Rear)

The BCM control module controls the distribution of air by the mode door actuator – auxiliary. The modes that may be selected are:

- AUTO
- Floor
- Bi-Level
- Vent

The desired rear air distribution mode can be selected with the Mode switch at the HVAC control – auxiliary. The HVAC control – auxiliary delivers the values to the BCM via serial data. The BCM controls the mode door actuator – auxiliary via LIN bus to move the door to the calculated position. Depending on the position of the door, air is distributed through various ducts.

Heating and A/C Operation

The purpose of the heating and A/C system is to provide heated and cooled air to the interior of the vehicle. The A/C system will also remove humidity from the interior and reduce windshield fogging. Regardless of the temperature setting, the following may affect the rate that the HVAC system can achieve the desired temperature:

- Recirculation setting
- Difference between inside and desired temperature
- Blower motor speed setting
- Mode setting
- Dashboard outlet open/closed position

When the A/C switch or the AUTO switch is pressed, the HVAC control sends a signal to the BCM via serial data. The BCM evaluates this signal and sends an A/C request signal to the ECM via CAN-Bus. The ECM checks all preconditions before releasing and if all conditions are met sends a release signal back to the BCM. The A/C compressor is activated by the BCM. The BCM supplies battery voltage to the A/C compressor solenoid. When the A/C switch is pressed, the BCM provides a pulse width modulation (PWM) signal to the A/C compressor solenoid in order to command the performance of the A/C compressor. The performance of the A/C compressor is regulated using evaporator temperature and engine load.

The A/C indicator does not indicate the compressor is currently active. The A/C indicator shows that A/C has been requested and the system will activate the compressor as needed.

The following conditions must be met in order to activate the A/C compressor:

- Battery voltage is between 9–18 V
- Engine coolant temperature is less than 124°C (255°F)
- Engine speed is greater than 600 RPM
- Engine speed is less than 5 500 RPM
- A/C high side pressure is between 269–2 929 kPa (39–425 PSI)
- Throttle position is less than 100%
- Evaporator temperature is greater than 3°C (38°F)
- ECM does not detect immoderate torque load
- ECM does not detect insufficient idle quality
- The ambient temperature is above 1°C (34°F)

The sensor information is used by the ECM to determine the following:

- The A/C high side pressure
- An A/C system load on the engine
- An immoderate A/C high side pressure
- The heat load at the A/C condenser

The air streams into the passenger compartment through the heater core and the evaporator core. The air temperature actuator drives the mixed air door to direct the airflow. If the interior temperature should be increased, the mixed air door is put into the position in which more air streams through the heater core. If the interior temperature should be decreased, the mixed air door is put into the position in which more air streams through the evaporator core.

Automatic Operation

In automatic operation, the BCM maintains the comfort level inside of the vehicle by controlling the A/C compressor solenoid, the blower motor, the air temperature actuators, mode actuator and recirculation actuator.

The automatic mode indicator shows that the system is in full automatic operation. If an individual setting is changed (excluding temperature), the automatic indicator will turn off, and that function will enter manual control. All other functions will remain under automatic control unless manually changed.

To put the HVAC system in automatic mode, the following is required:

1. The auto switch must be activated.
2. The air temperature switch must not be in either the full hot or full cold position.

Once the desired temperature is reached, the blower motor, mode, recirculation and temperature actuators automatically adjust to maintain the temperature selected. The BCM performs the following functions to maintain the desired air temperature:

- Monitors the following:
  - Ambient (outside) air temperature sensor
  - Passenger compartment temperature sensor
  - Calculated front duct air temperatures
  - Auxiliary duct air temperature sensors
  - Windshield temperature and inside moisture sensor (ASV or CE1)
  - Evaporator temperature sensor
  - Ambient light/sunload sensor
- Regulate the blower motor speed
- Regulate the rear blower motor speed
- Position the air temperature actuators
- Position the mode door actuators
- Position the recirculation actuator
- Control of the A/C compressor solenoid

When the temperature setting is set to full hot, the blower speed will increase gradually as the coolant warms to normal operating temperature. When normal engine operating temperature is reached the blower stays on high speed and the air temperature actuators stays in the full heat position.

When the temperature setting is set to full cold, the blower will immediately operate at high speed and the air temperature actuators move to full cold position. The mode actuator moves to the panel position and the recirculation actuator moves to the recirculation position.

Under cold ambient temperatures, the automatic HVAC system provides heat in the most efficient manner. The operator can select an extreme temperature setting but the system will not warm the vehicle any faster. Under warm ambient temperatures, the automatic HVAC system also provides air conditioning in the most efficient manner. Selecting an extreme cool temperature will not cool the vehicle any faster.

In automatic mode the values of the windshield temperature and inside moisture sensor are used as control inputs for the BCM application to calculate the fog risk on the passenger compartment side of the windshield and ability to reduce fuel consumption by decreasing A/C compressor power to a minimum without causing any fog. The A/C compressor and the defrost mode are activated to prevent or remove fog on the passenger compartment side of the windshield. The sensor will also enable partial recirculation mode in order to improve heat-up performance of the passenger compartment under cold ambient temperature conditions without the risk of mist build-up on the windshield.

Engine Coolant and A/C System Refrigerant

For information on engine coolant, coolant flow, A/C refrigerant, and the A/C refrigerant cycle, refer to [Link target (target-id 162334-) not found] .

Section 6

Power and Signal Distribution

Data Communications **6-2**

Schematic and Routing Diagrams **6-2**

Data Communication Schematics 6-3

Body Control System Schematics 6-28

Description and Operation **6-32**

Data Link Communications Description and Operation 6-32

Electrical Component and Inline Harness Connector End Views **6-36**

Component Locator **6-36**

Electrical Center Identification Views 6-36

Component Connector End Views 6-86

Inline Harness Connector End Views 6-609

Electrical Component Locator and Harness Routing Views **6-744**

Schematic and Routing Diagrams **6-744**

Harness Routing Views 6-744

Power Outlets **6-810**

Schematic and Routing Diagrams **6-810**

Cigar Lighter/Power Outlet Schematics 6-811

Description and Operation **6-816**

Mobile Device Wireless Charger Description and Operation 6-816

Power Outlets Description and Operation 6-817

Wiring Systems and Power Management **6-820**

Schematic and Routing Diagrams **6-820**

How to Use Electrical Schematics 6-820

Electrical Schematic Symbols 6-846

Power Distribution Schematics 6-863

Power Moding Schematics 6-904

Upfitter Provision Schematics 6-906

Description and Operation **6-922**

Power Mode Description and Operation 6-922

Retained Accessory Power Description and Operation 6-925

Special Purpose Vehicle Module Description and Operation 6-926

Power and Signal Distribution

Data Communications

Schematic and Routing Diagrams

Data Communication Schematics (Data Link Connector and Serial Data Gateway Module Power and Ground)

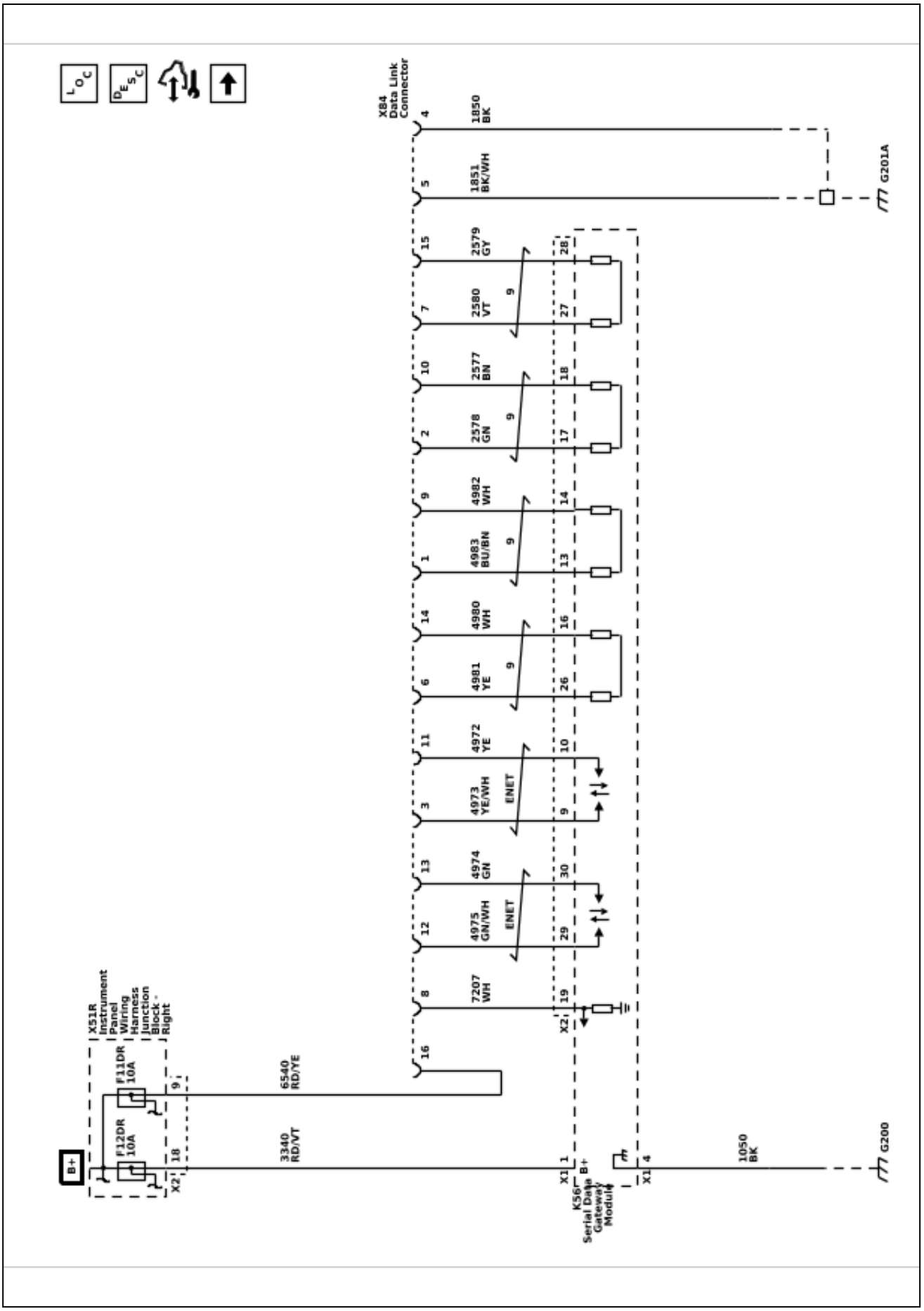

Data Communication Schematics (CAN 1)

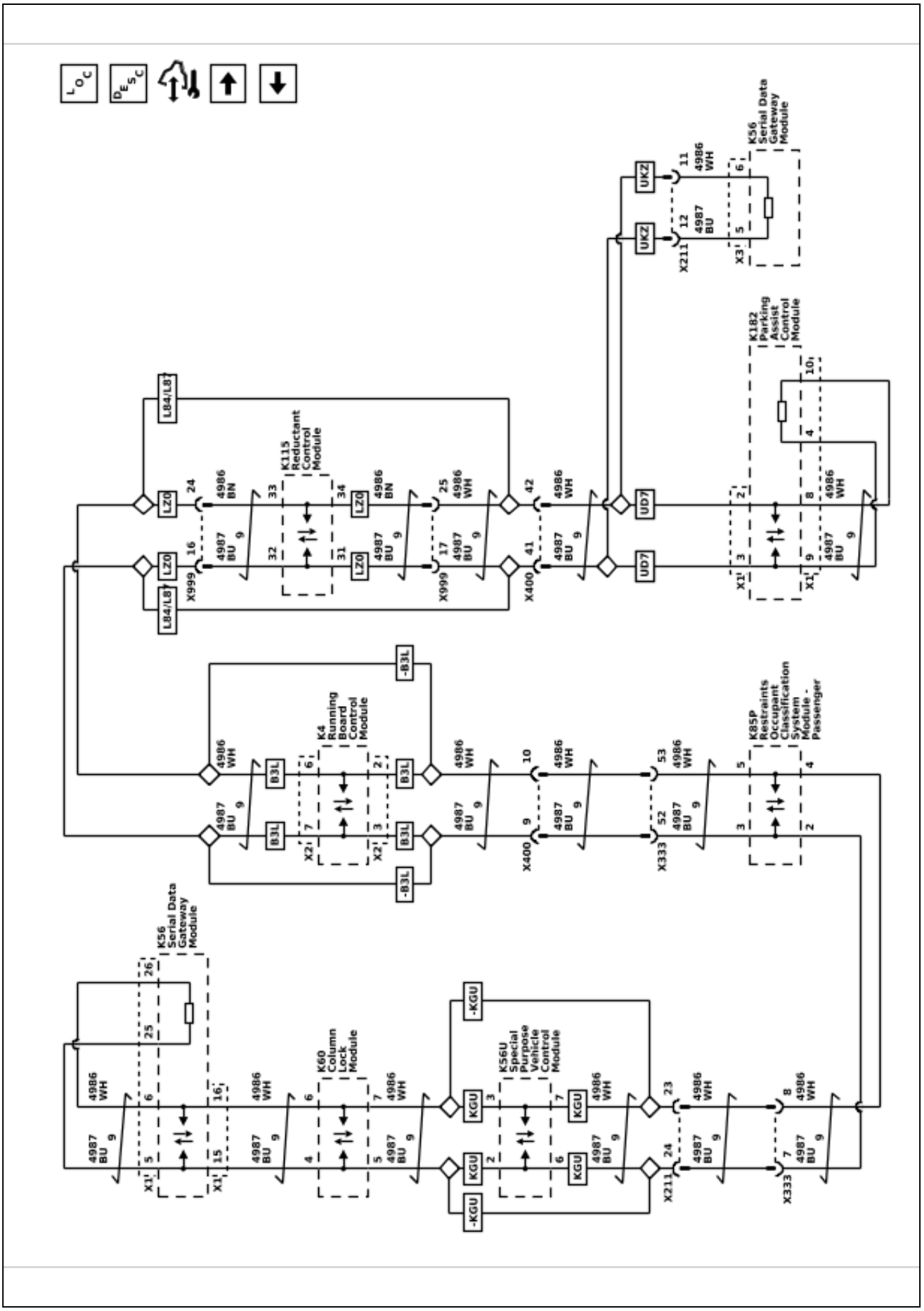

6613412

6613414

Data Communication Schematics (CAN 2, 1 of 2)

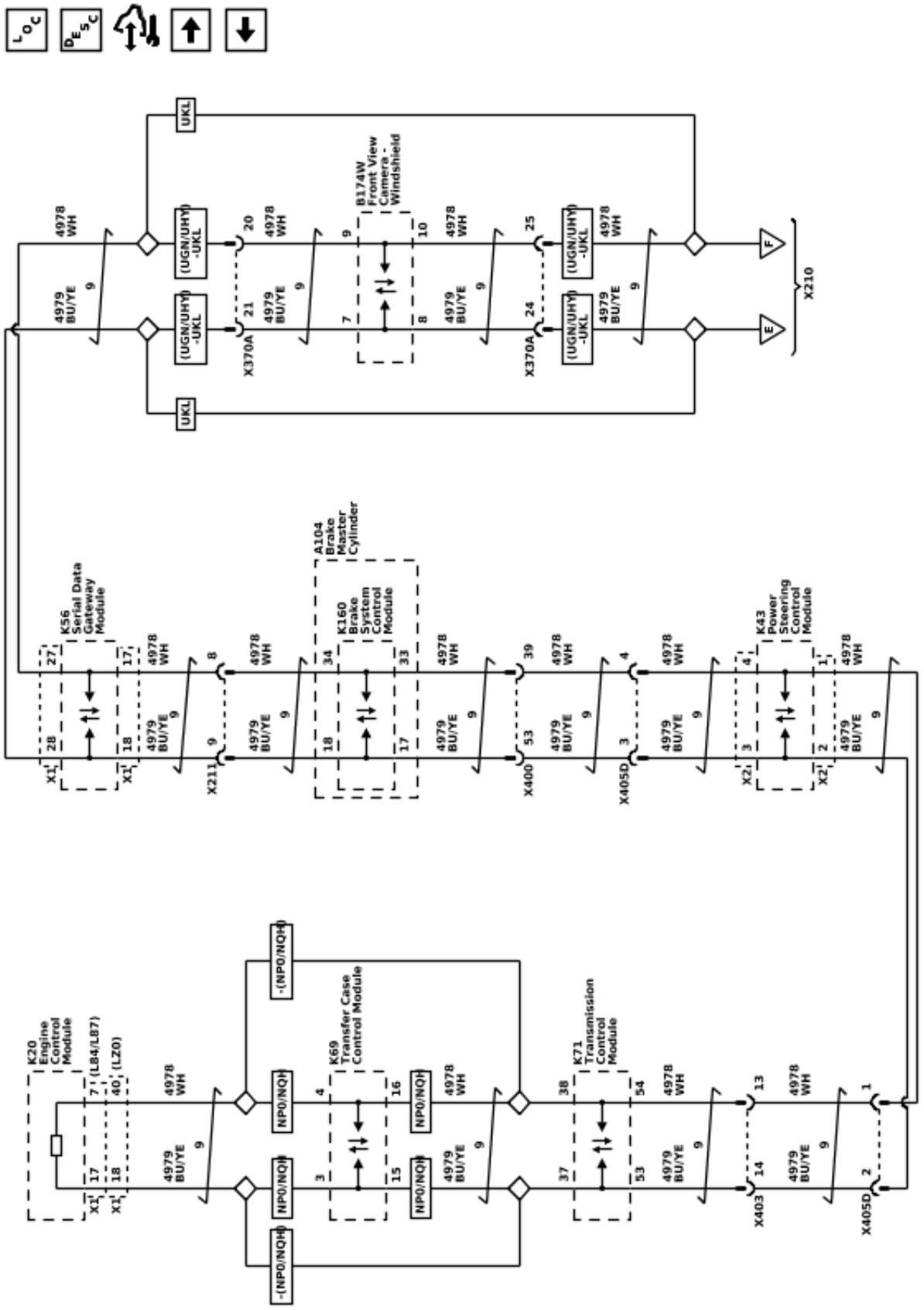

Data Communication Schematics (CAN 2, 2 of 2)

6613415

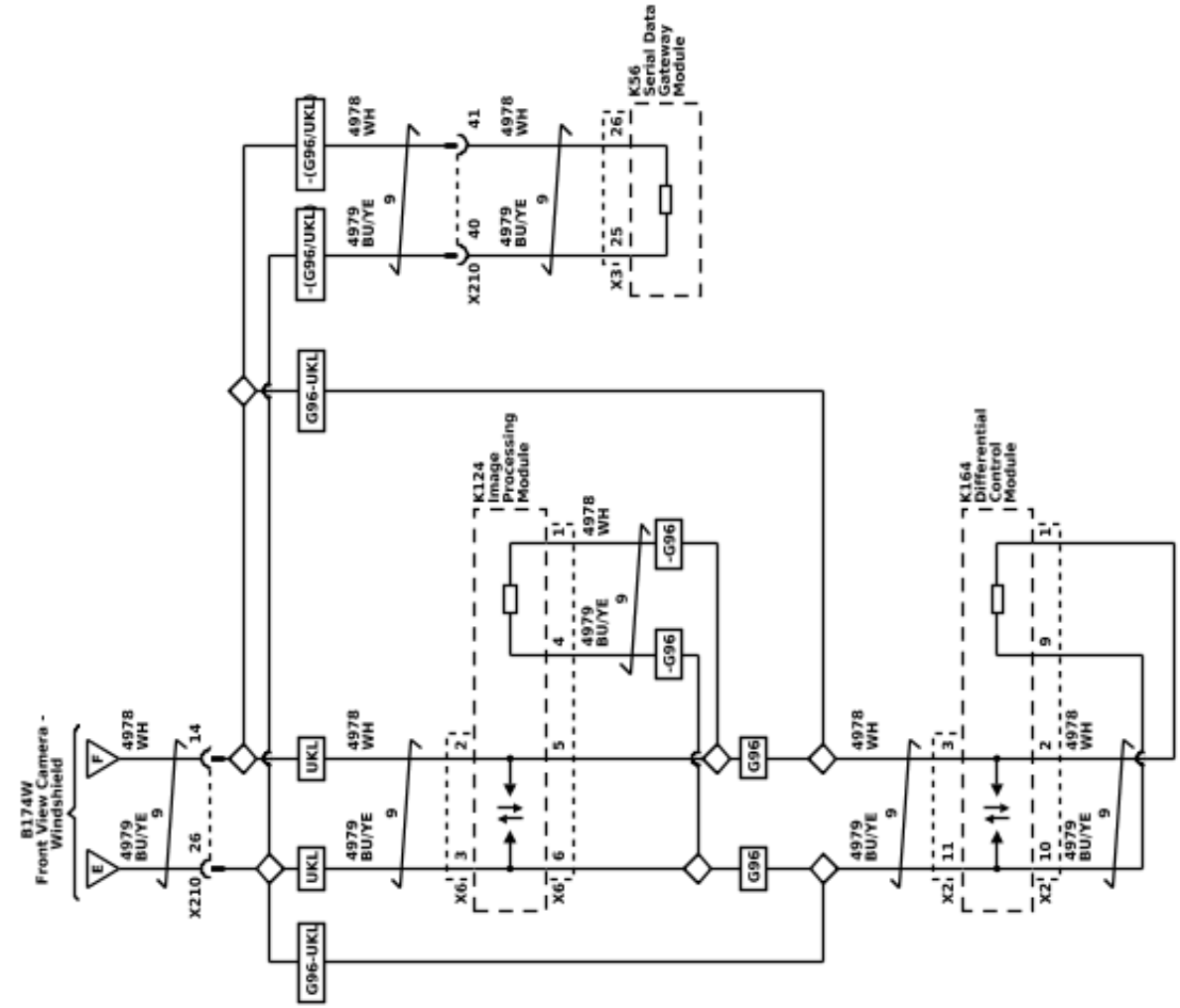

Data Communication Schematics (CAN 3)

6613416

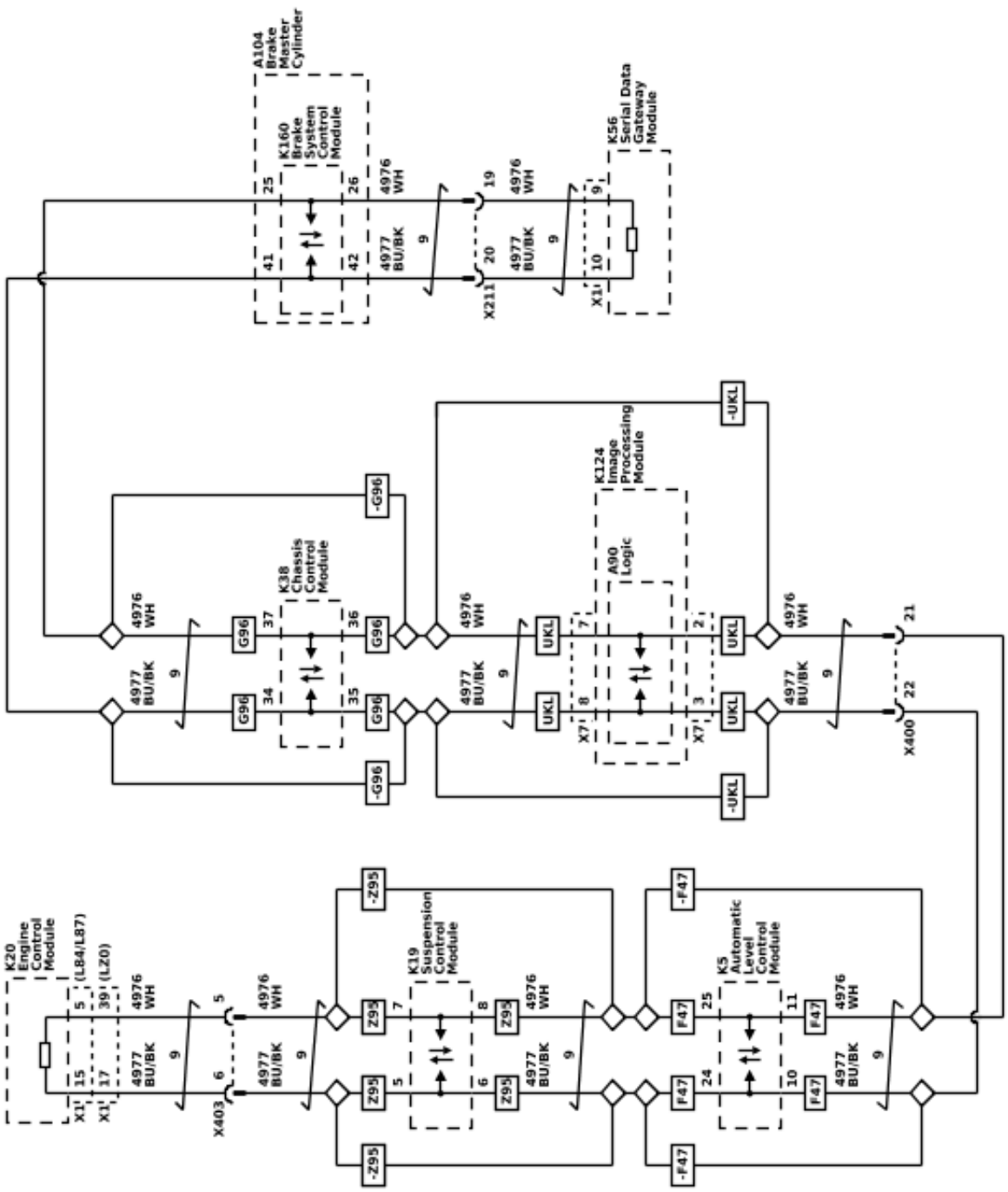

Data Communication Schematics (CAN 4)

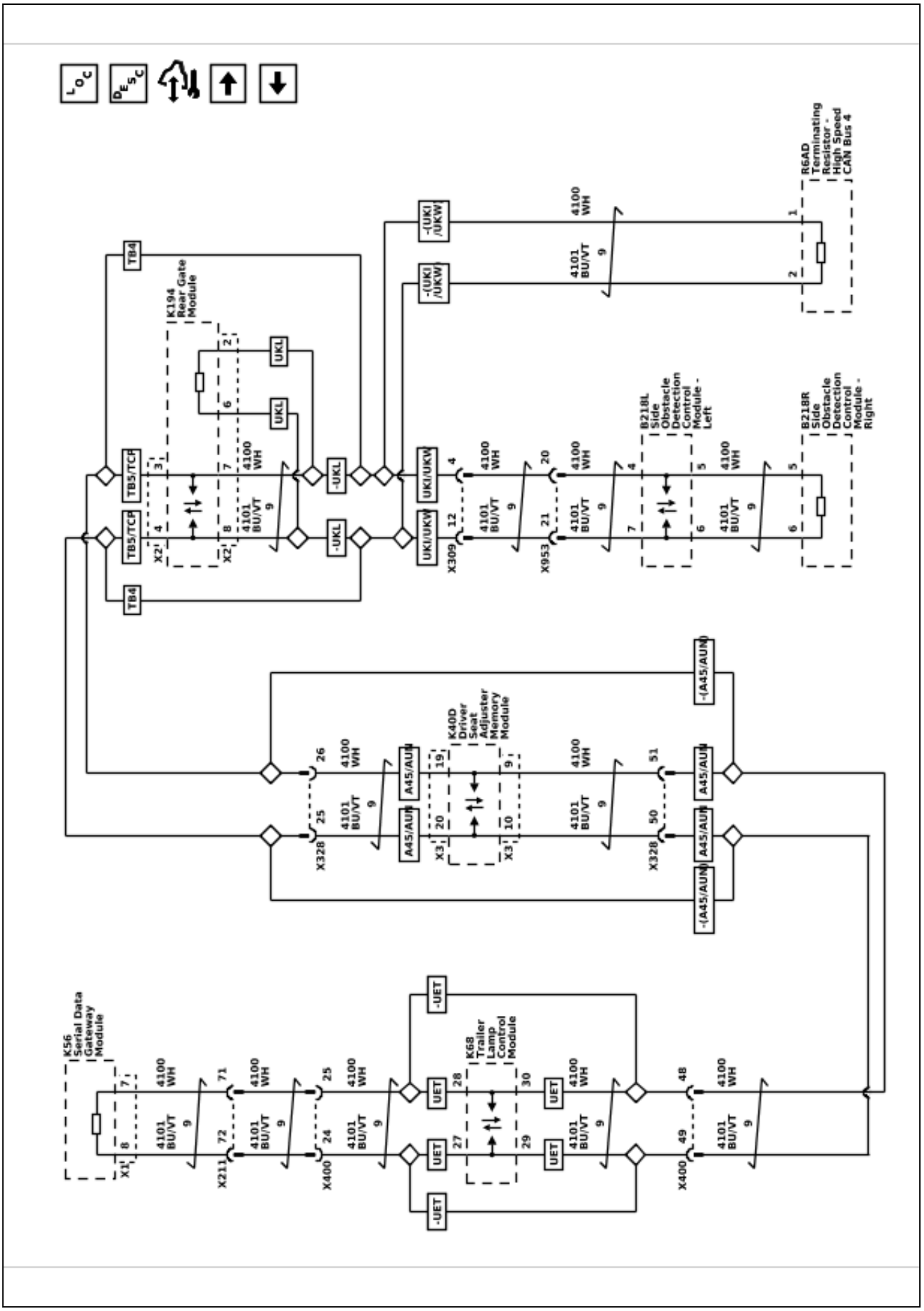

Data Communication Schematics (CAN 5 (- (5W4 / 9C1)))

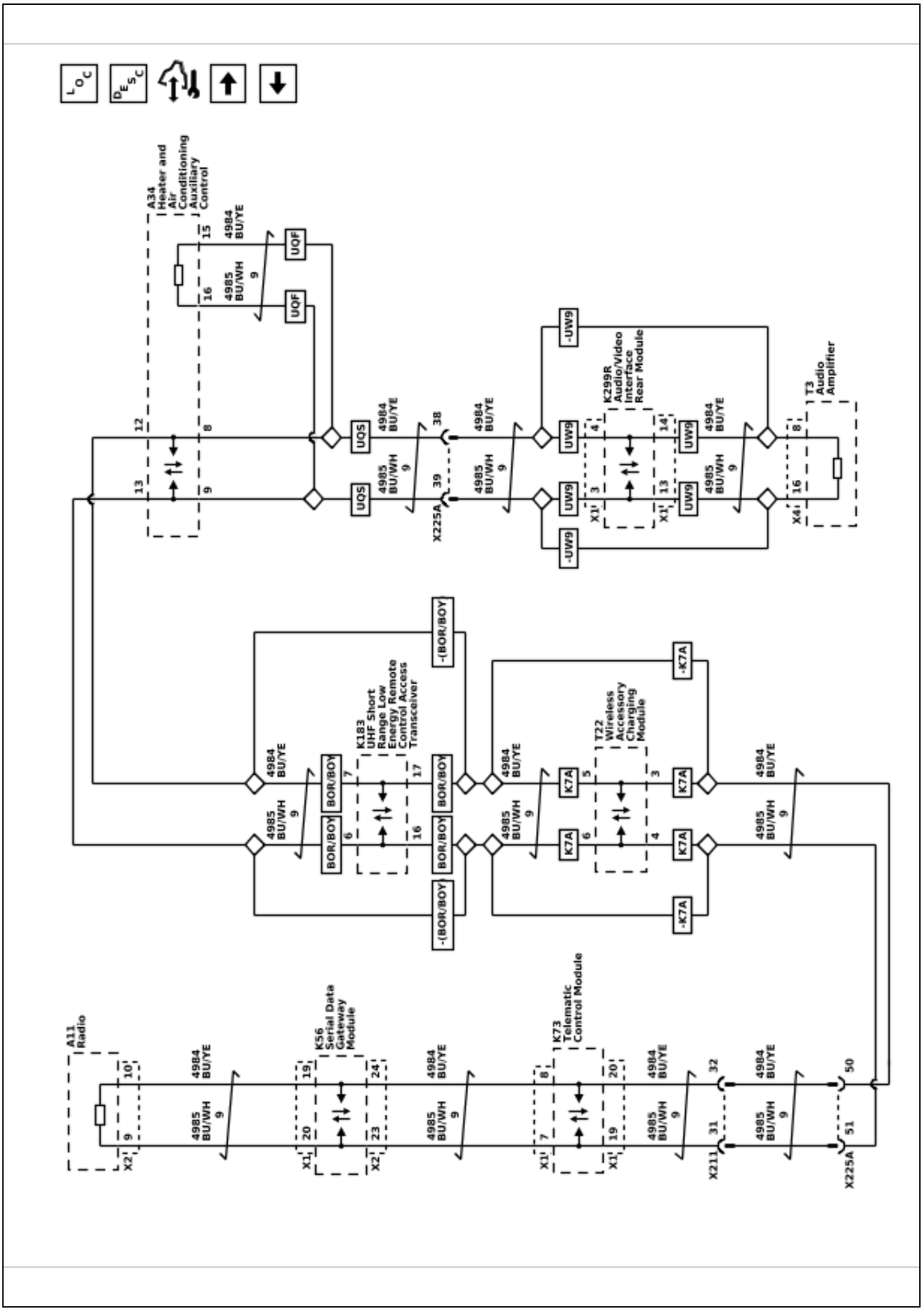

6613419

Data Communication Schematics (CAN 5 (5W4 / 9C1))

6613519

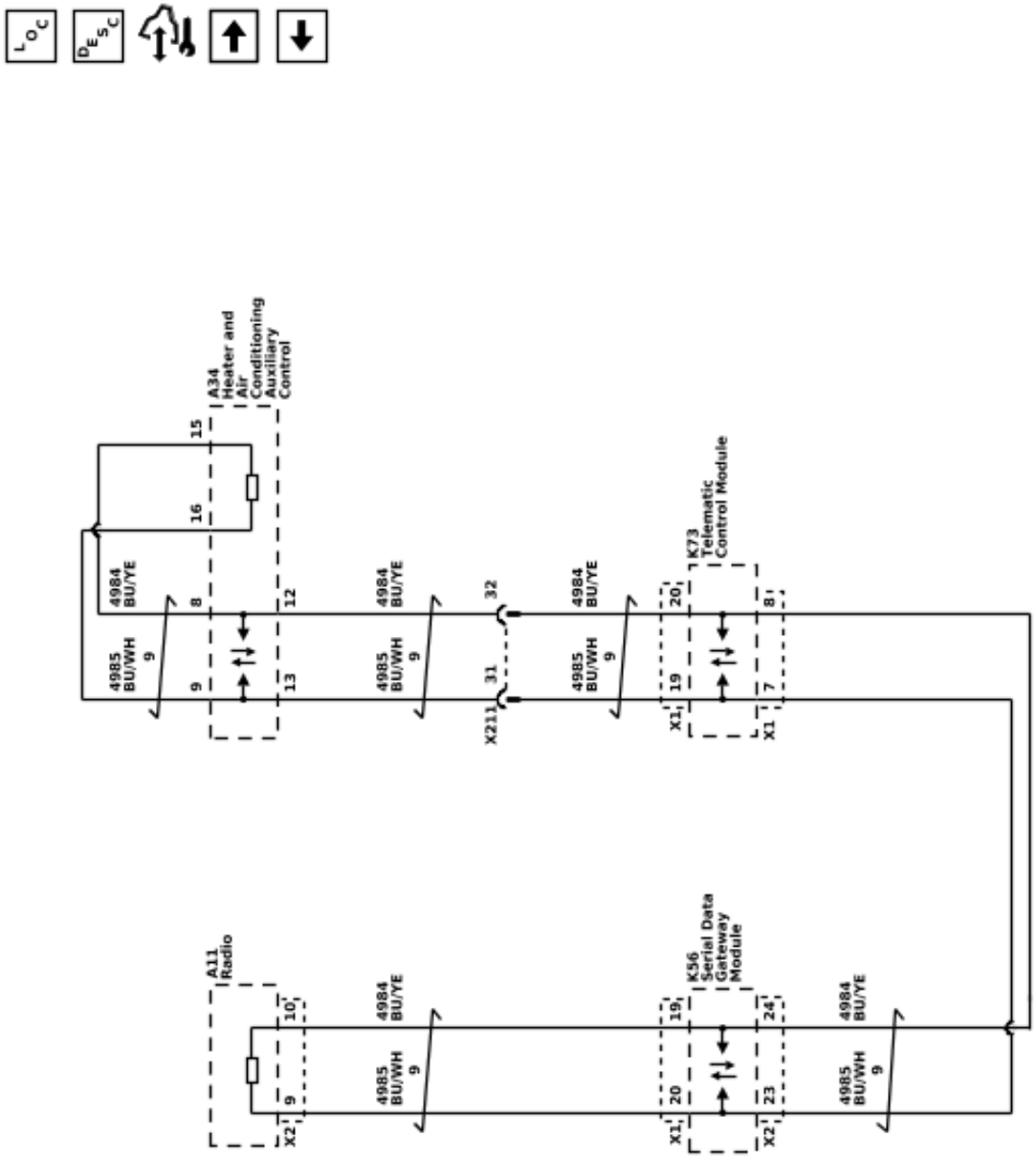

Data Communication Schematics (CAN 8 (UKL))

6613420

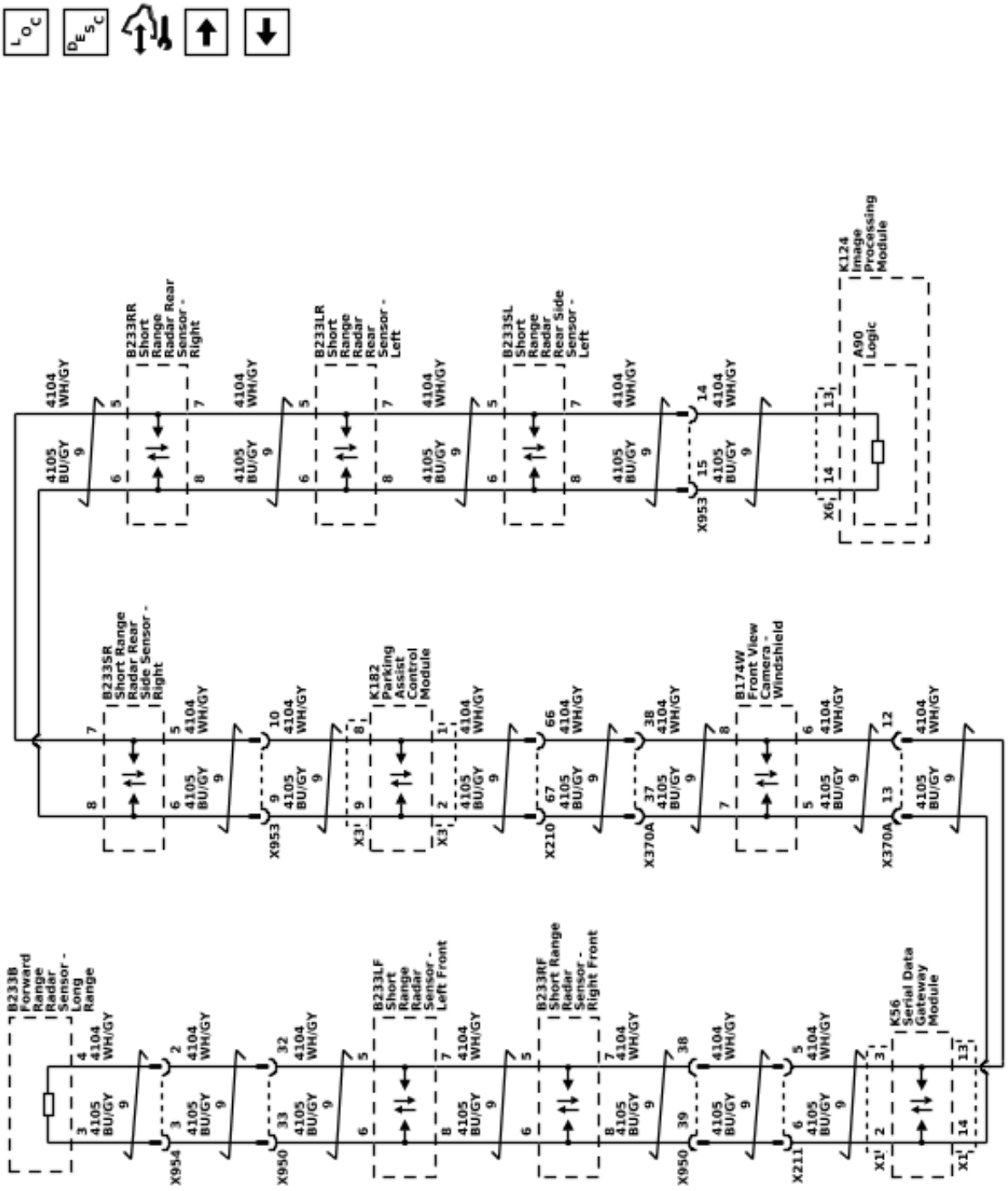

6613431

Data Communication Schematics (CAN 8 ((UGN / UHY) - UKL))

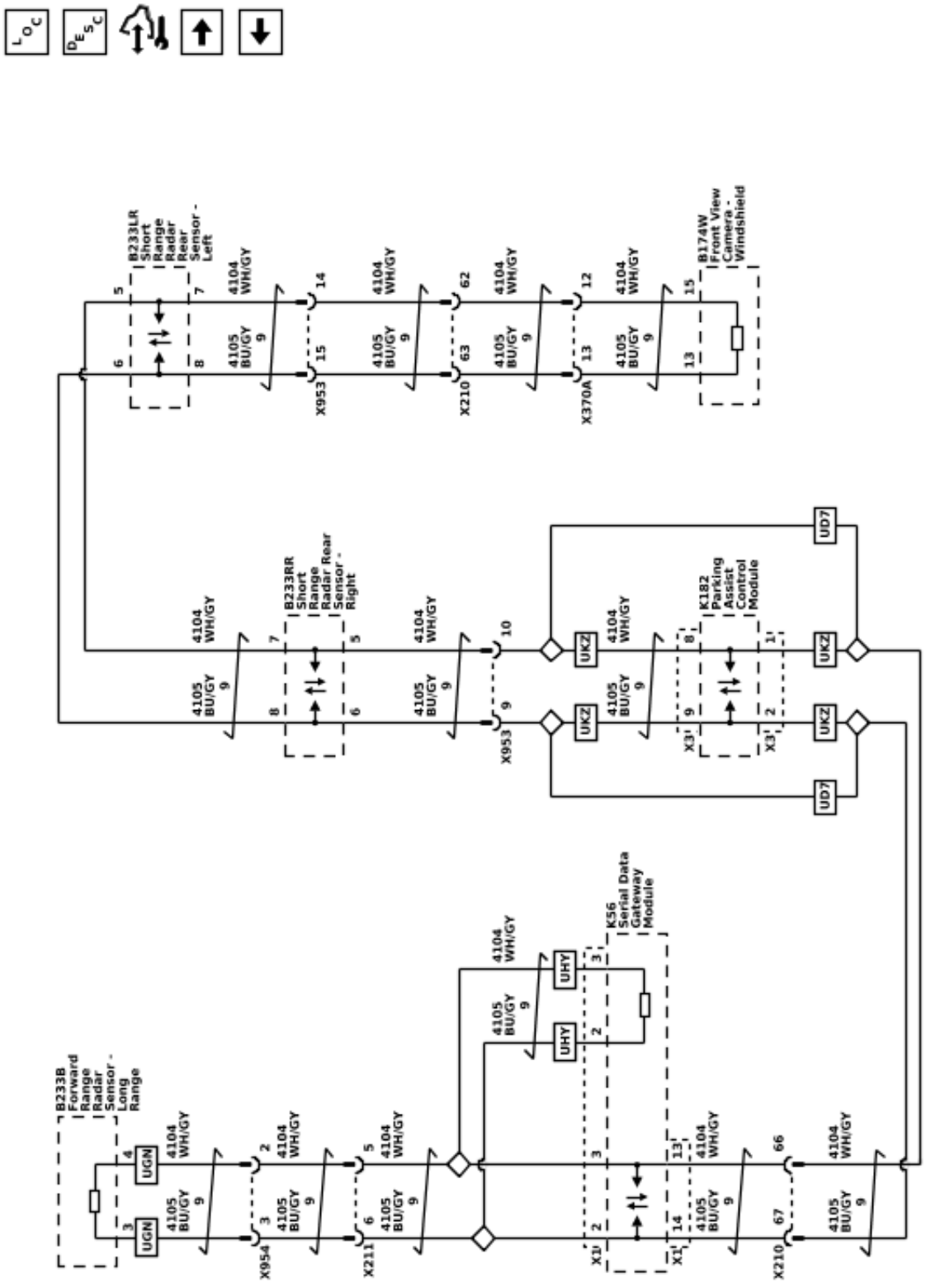

Data Communication Schematics (CAN 9)

6613413

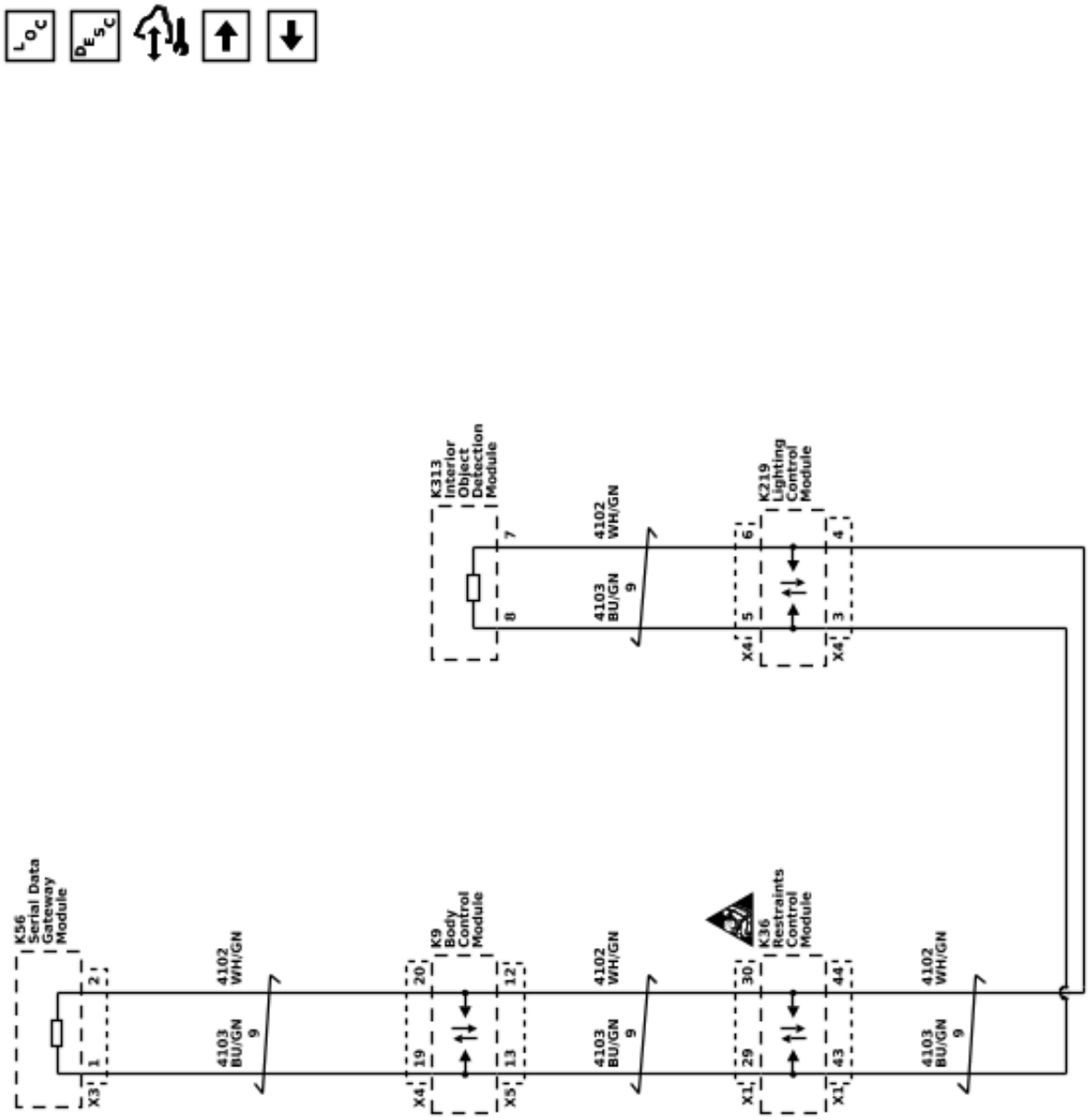

6613421

Data Communication Schematics (Powertrain and Enable CAN (L84 / L87))

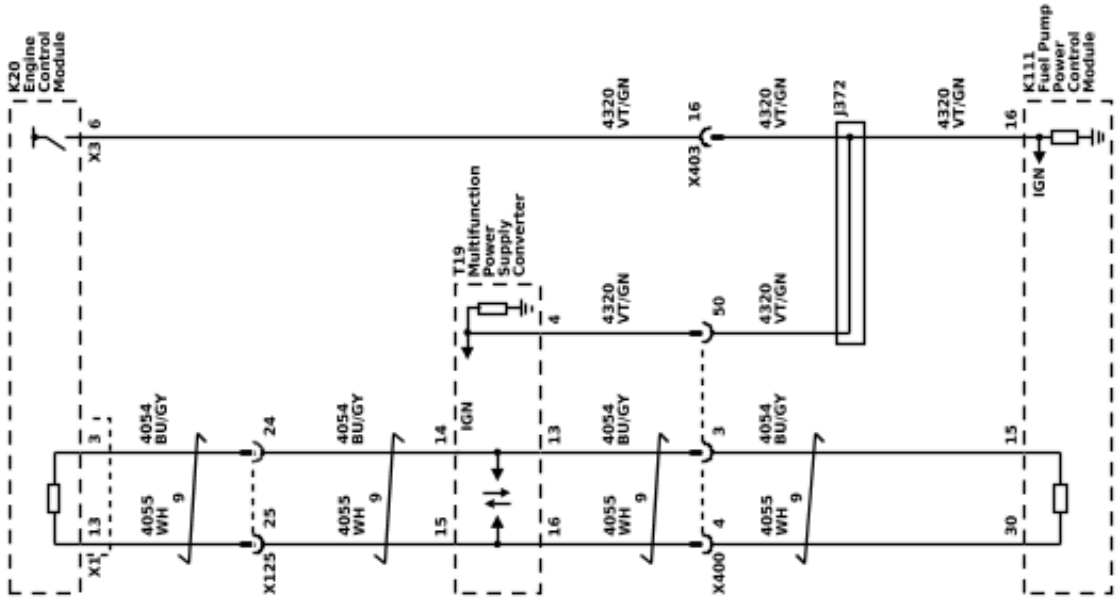

6613546

Data Communication Schematics (Powertrain CAN (LZ0))

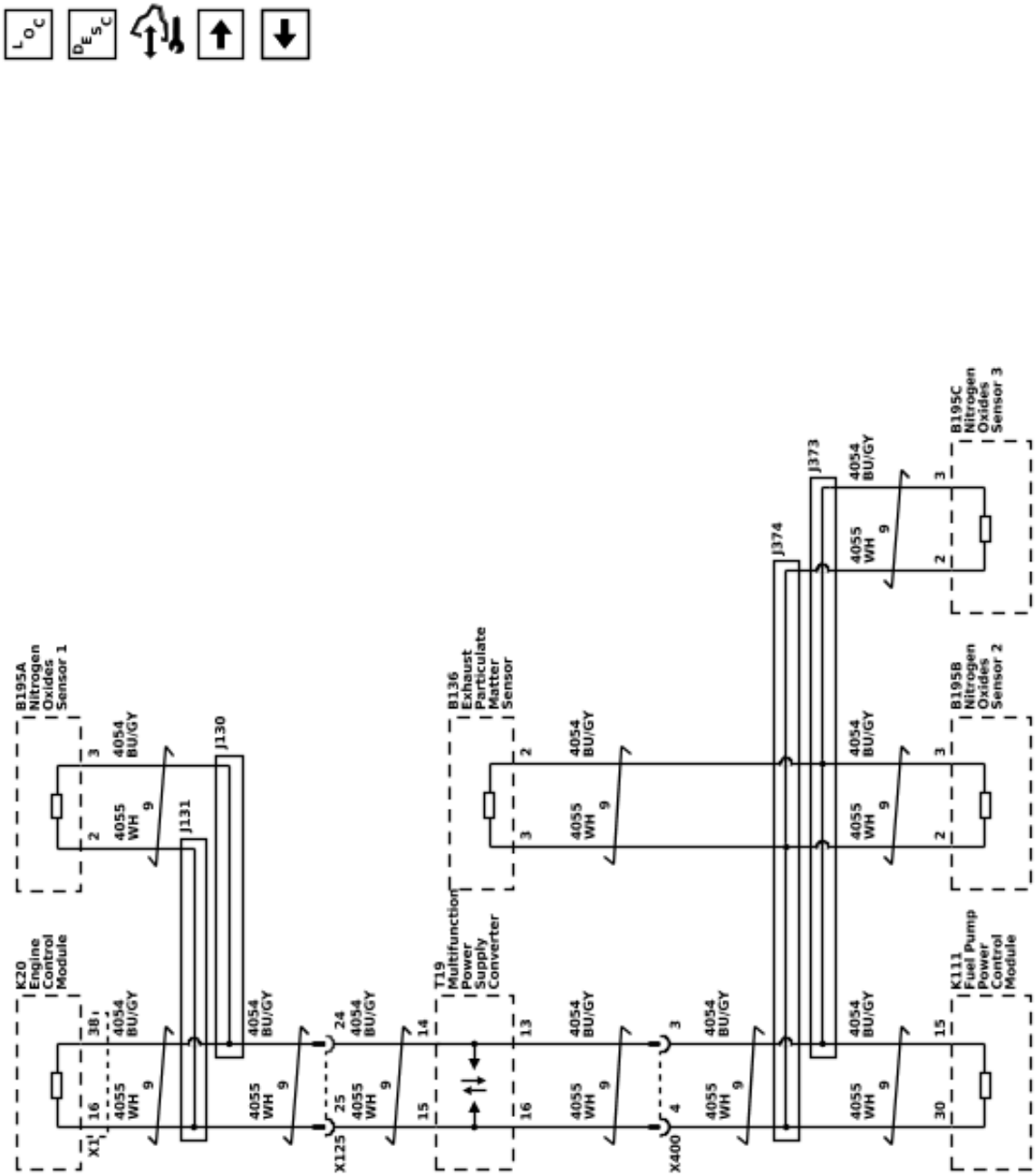

Data Communication Schematics (Powertrain CAN Enable (LZ0))

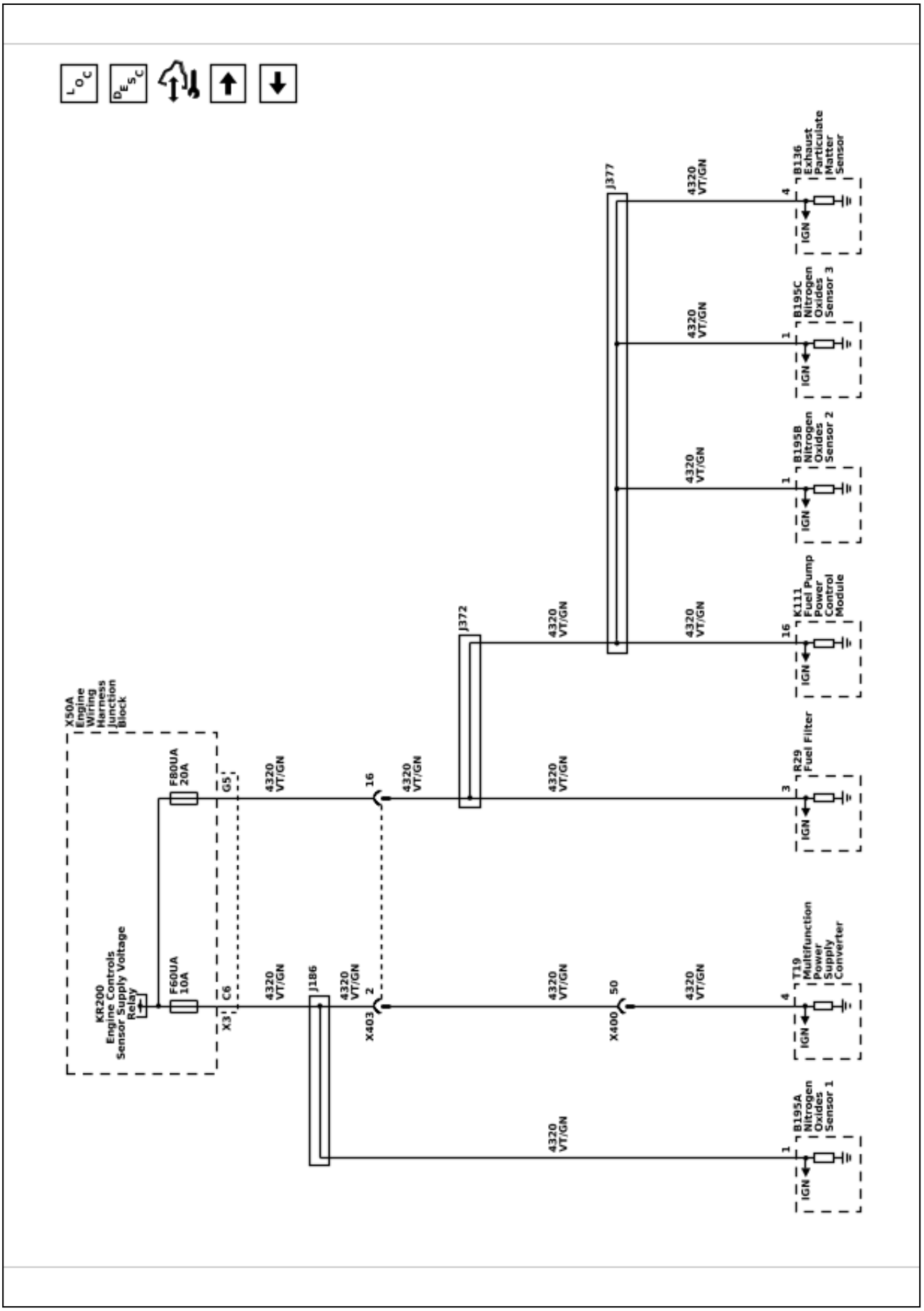

Data Communication Schematics (Virtual Key CAN (BOR / BOY))

6620601

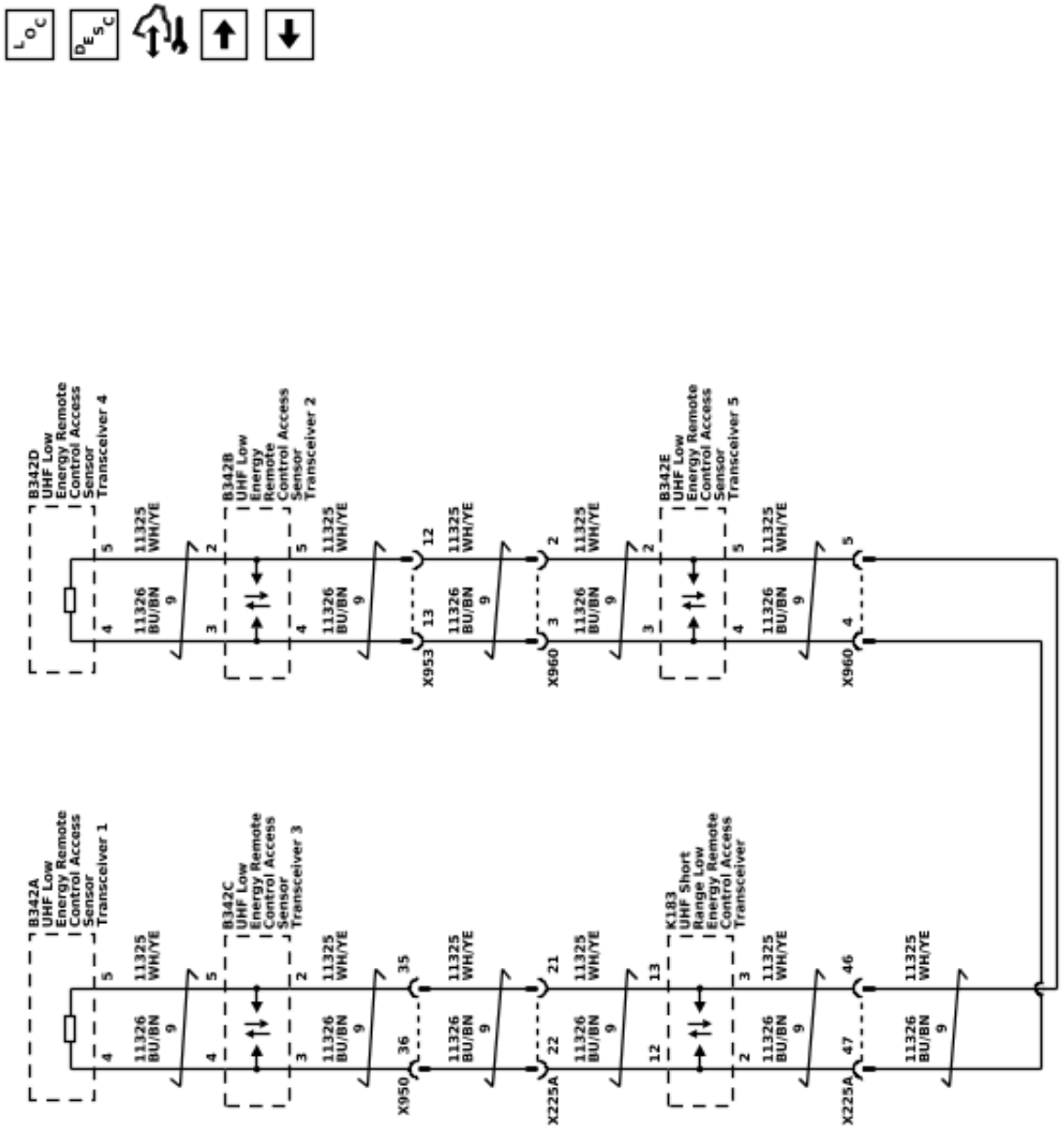

Data Communication Schematics (Active Safety CAN (UKL))

6688505

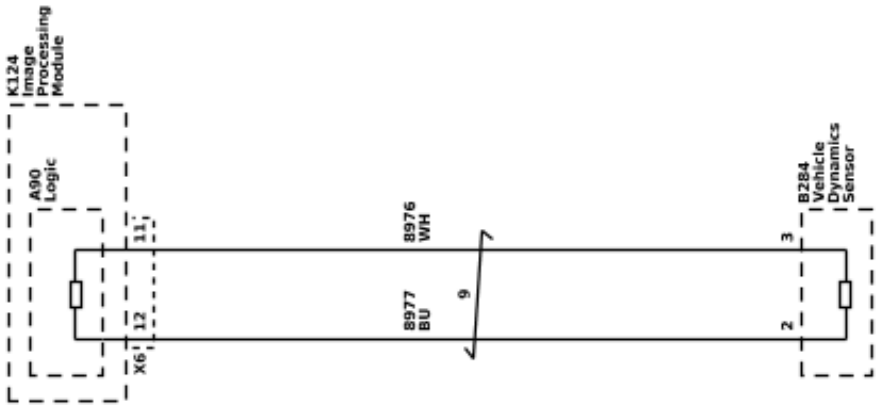

6613423

Data Communication Schematics (Body Control Module Local Interconnect Network - LIN Busses 2, 3, and 4)

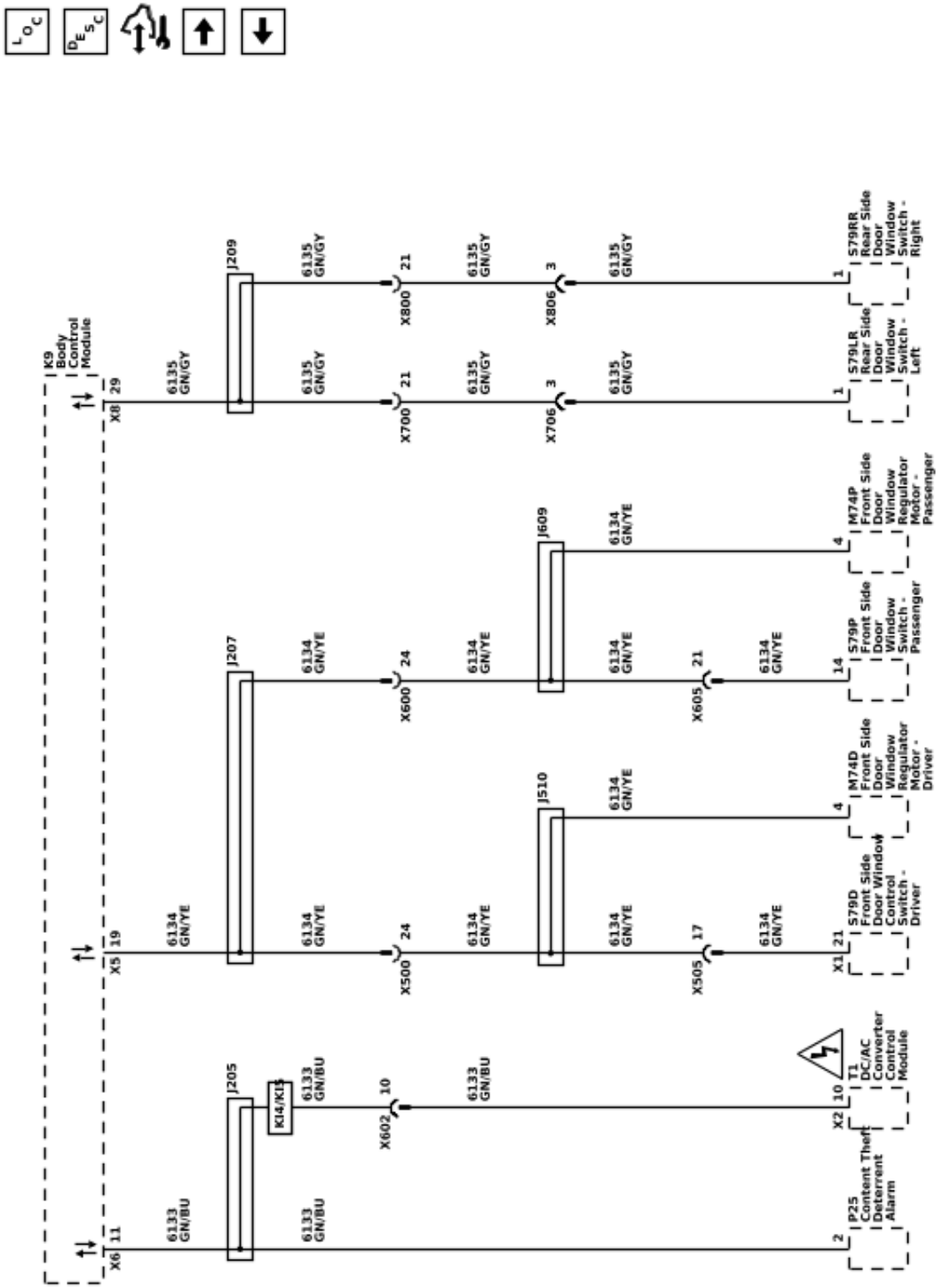

Data Communication Schematics (Body Control Module Local Interconnect Network - LIN Busses 5, 6, 7, and 8)

6613424

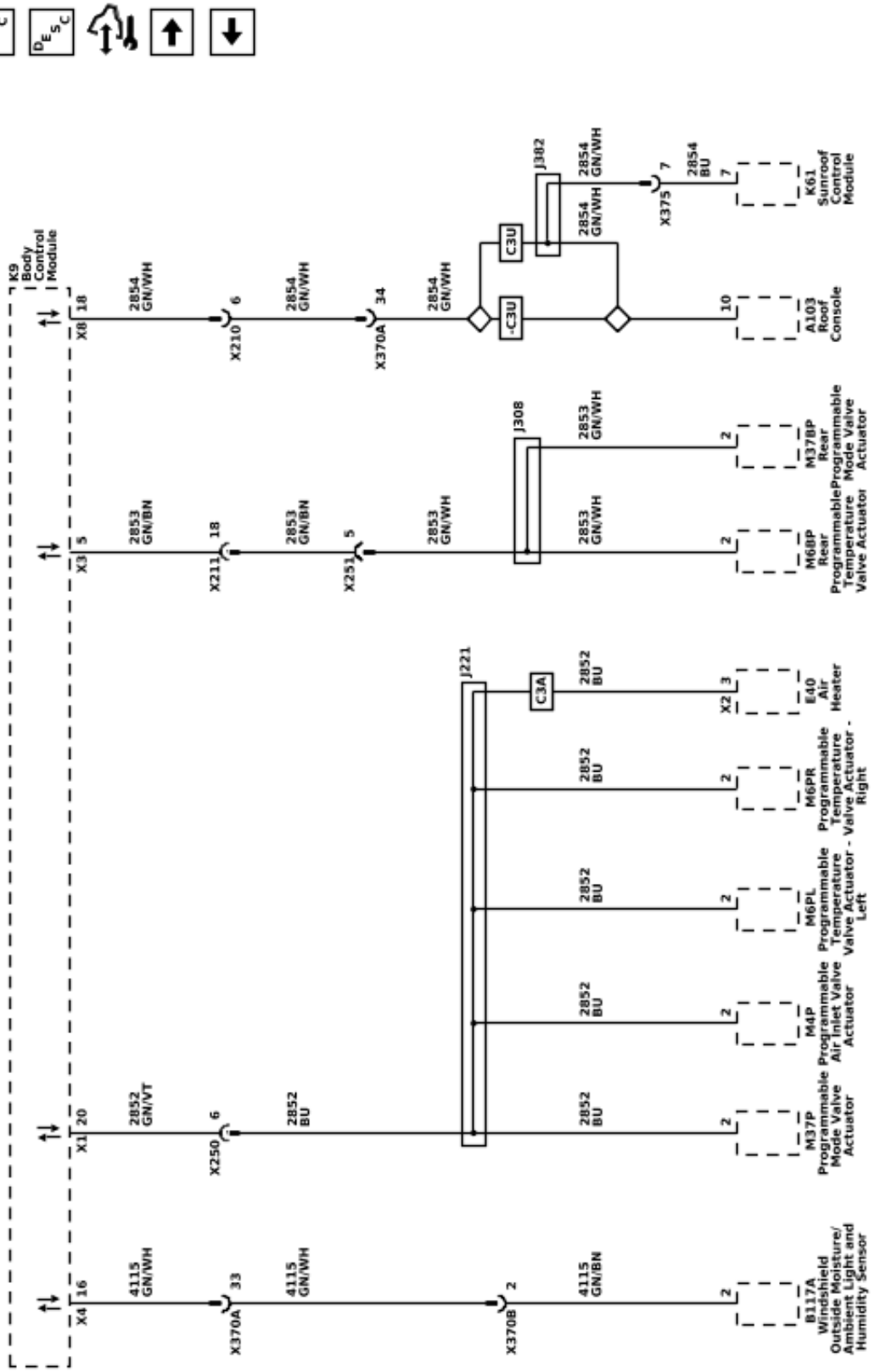

6613425

Data Communication Schematics (Body Control Module Local Interconnect Network - LIN Busses 9, 10, and 11)

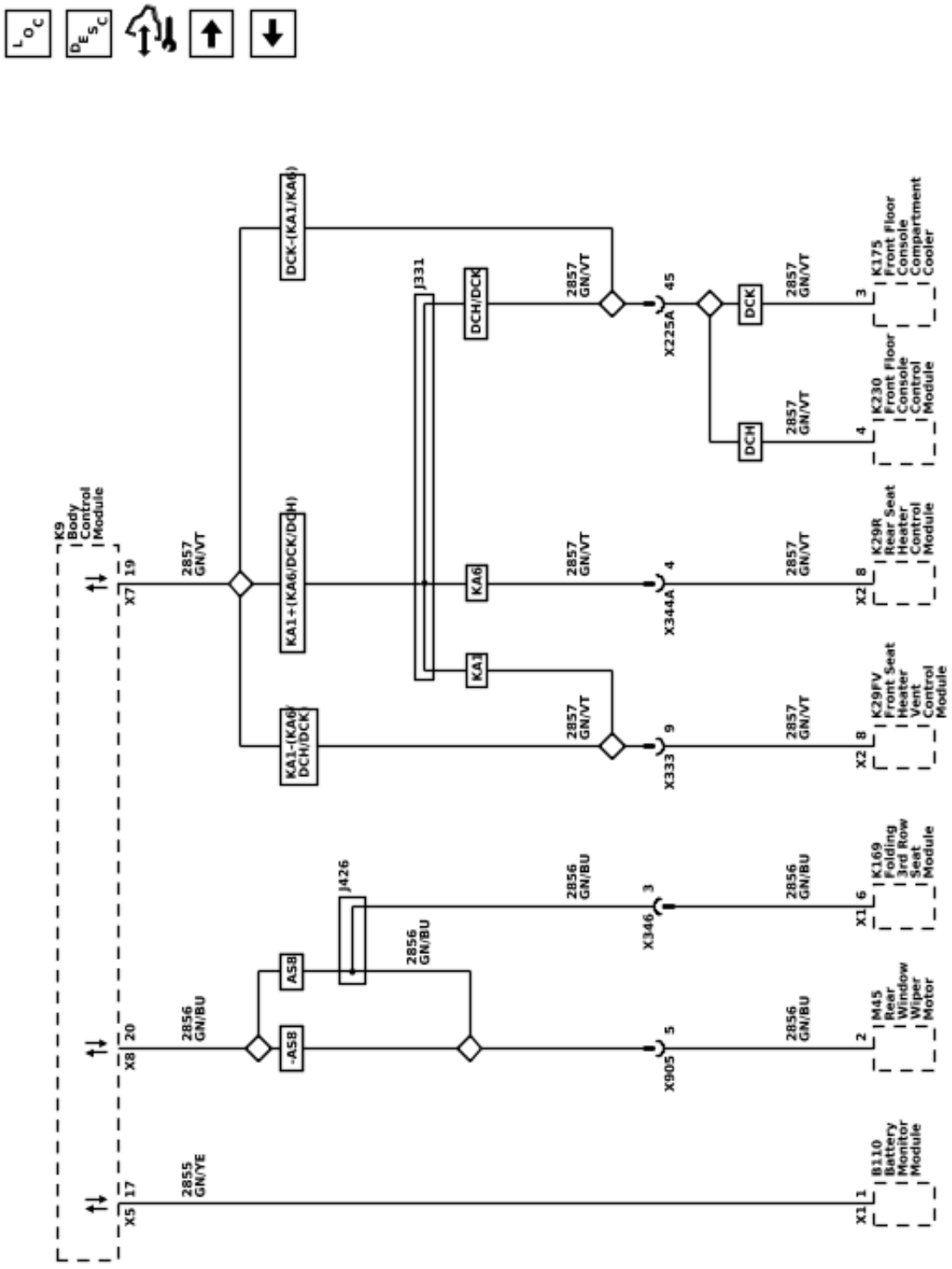

Data Communication Schematics (Body Control Module Local Interconnect Network - LIN Busses 12, 14, and 16)

6613426

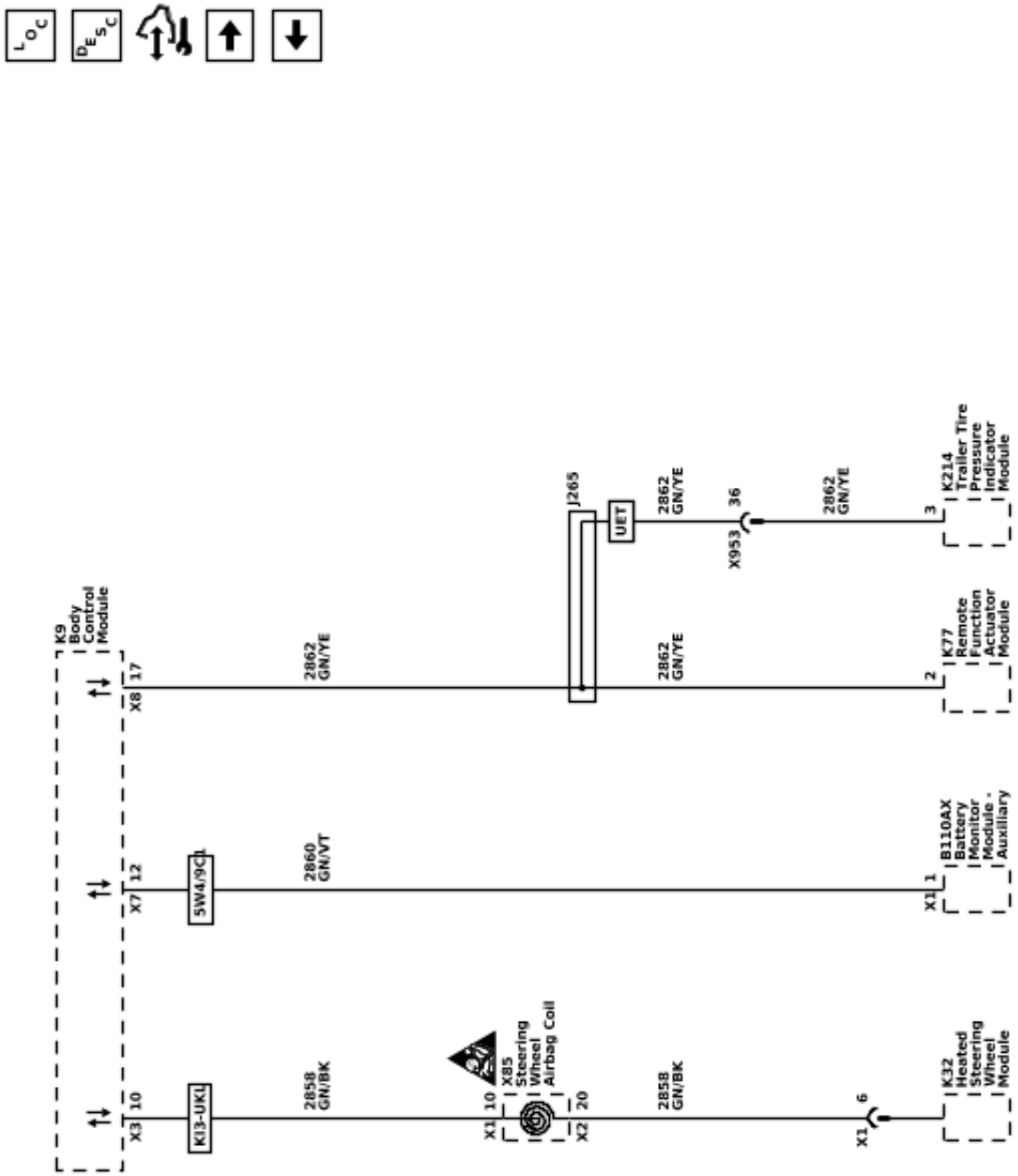

Data Communication Schematics (Brake System Control Module Local Interconnect Network - LIN Busses)

6613427

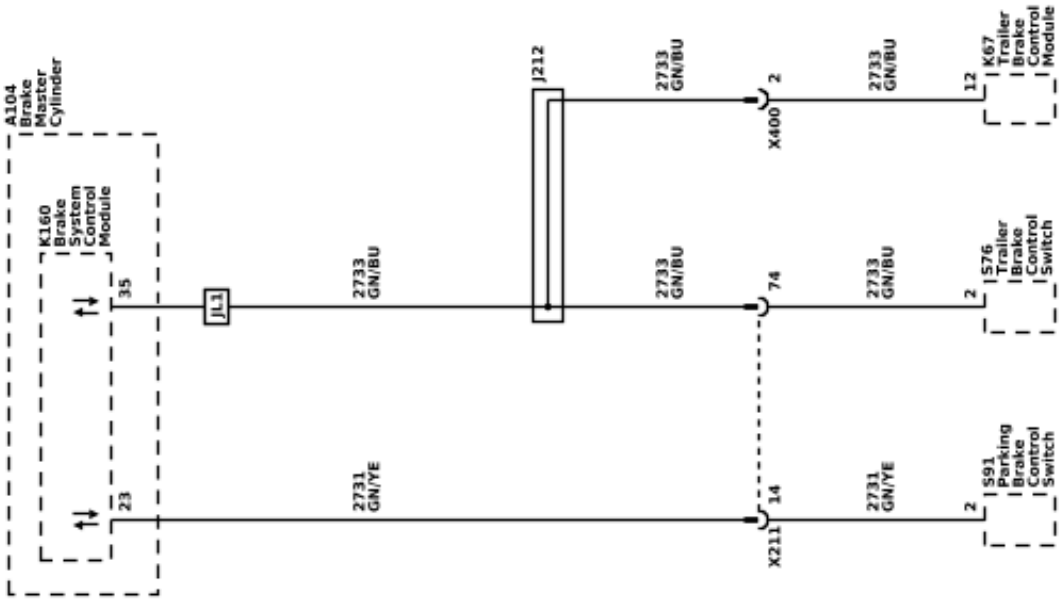

Data Communication Schematics (Engine Control Module Local Interconnect Network - LIN Busses)

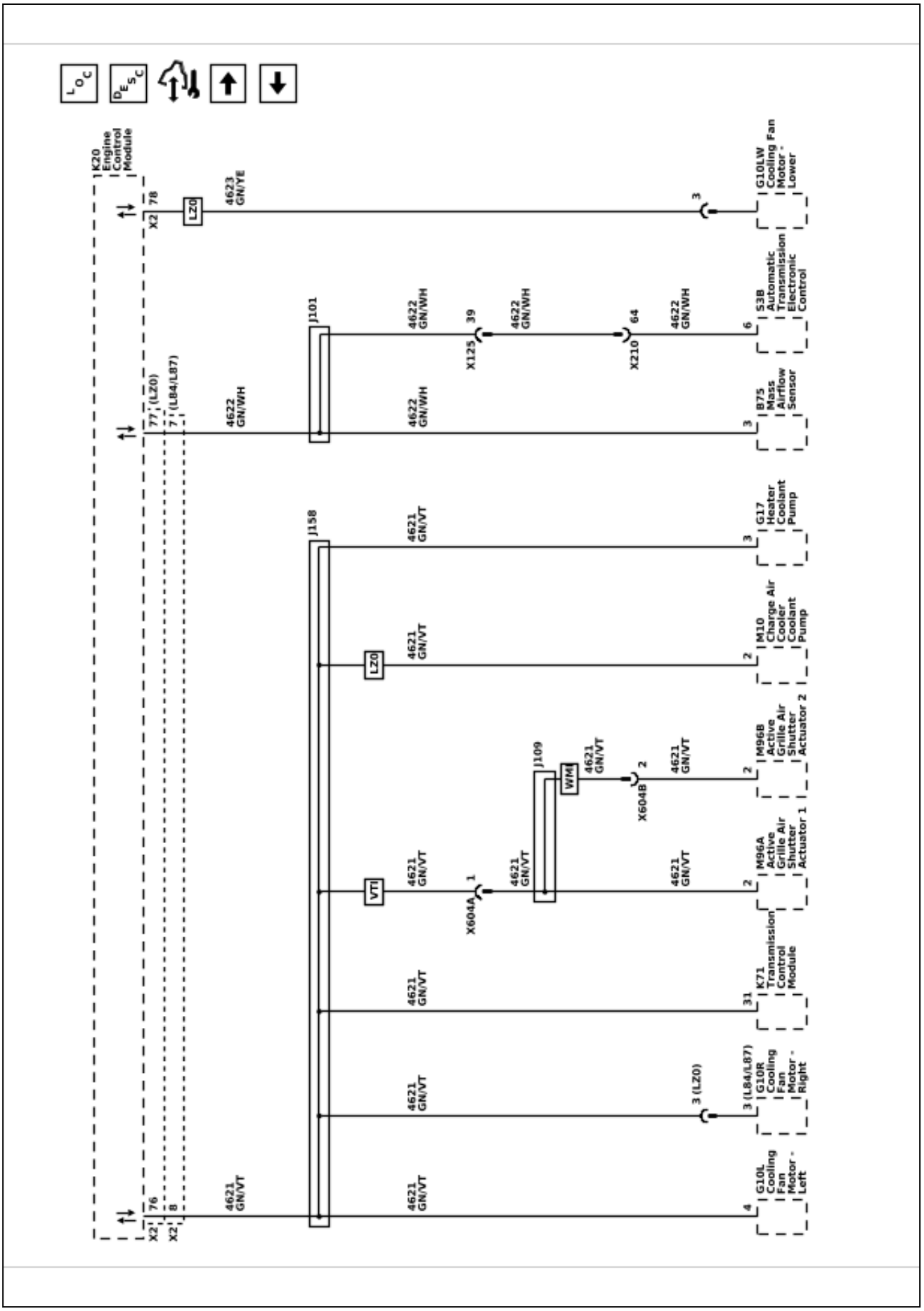

6613428

Data Communication Schematics (General Local Interconnect Network - LIN Busses)

6613429

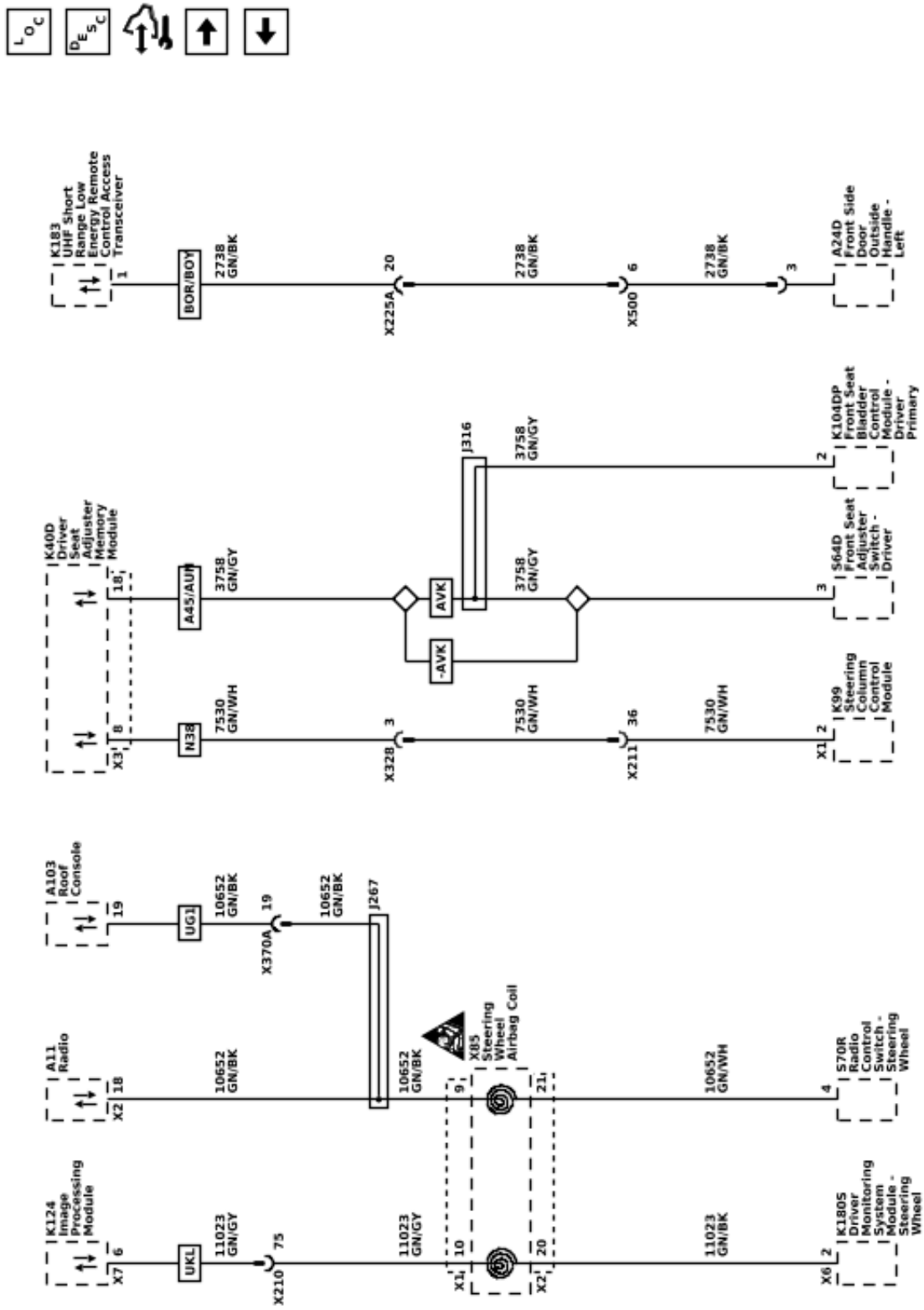

Data Communication Schematics (Ethernet Busses)

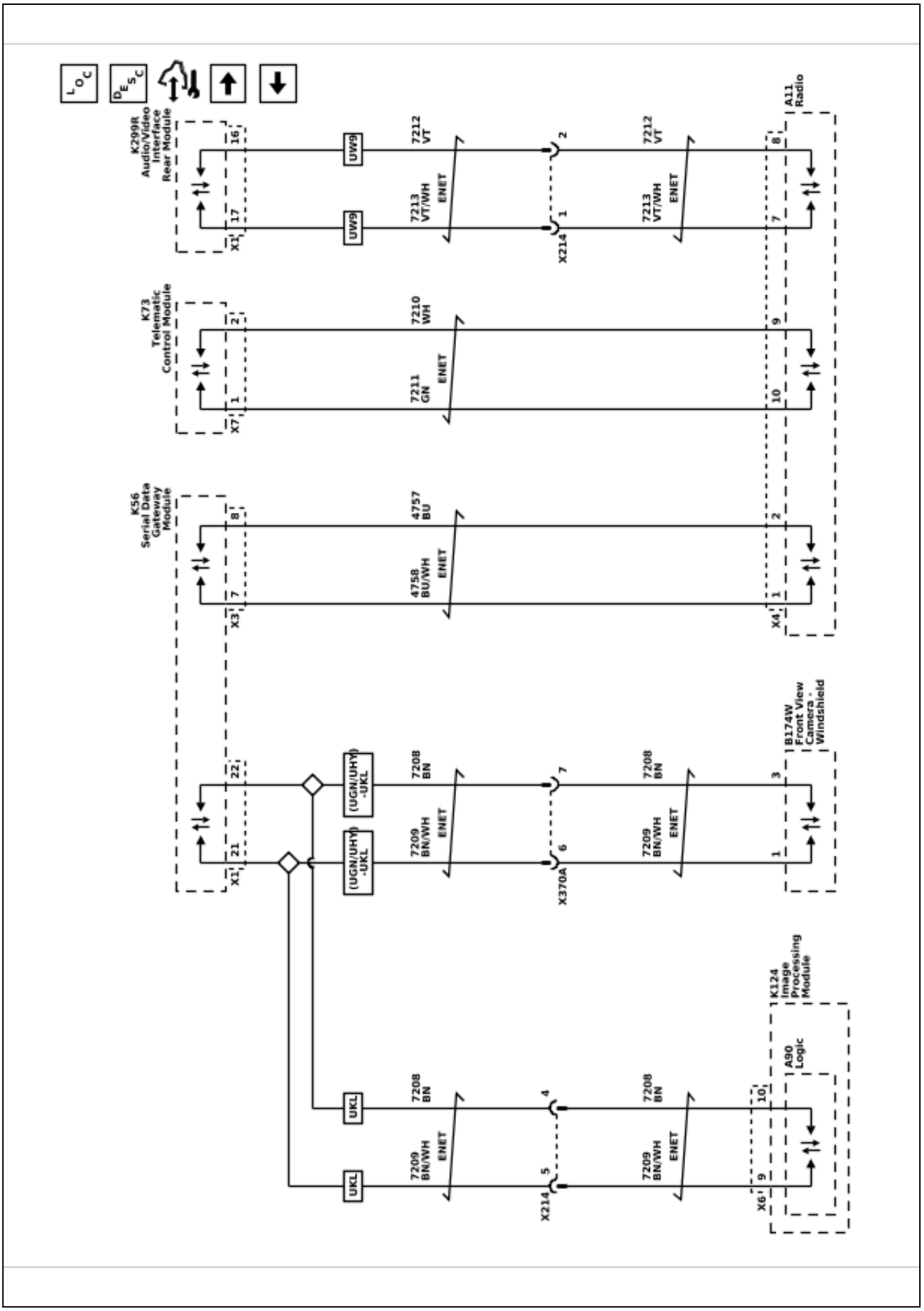

6613430

Data Communication Schematics (Automotive Audio Bus)

6613307

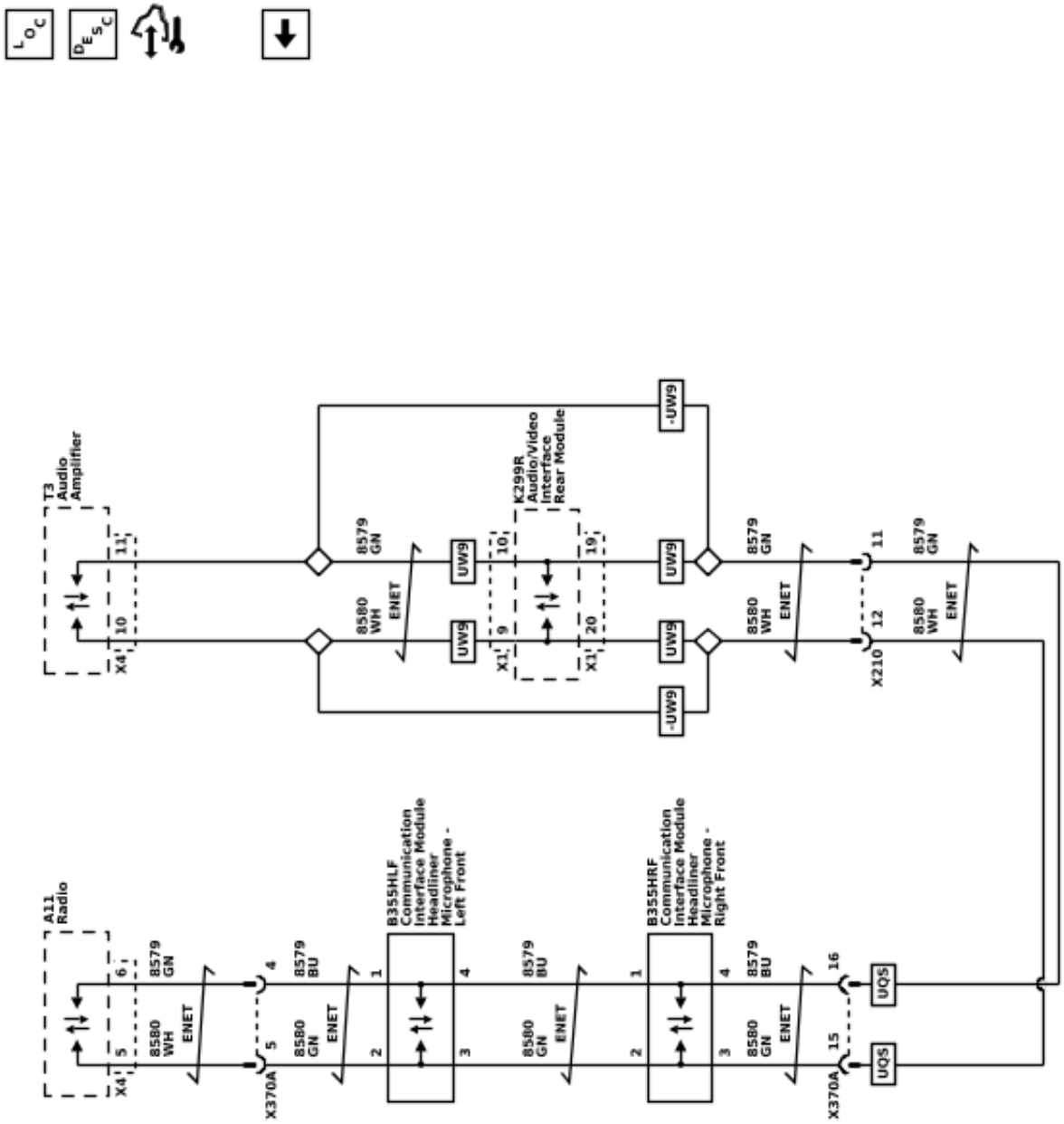

Body Control System Schematics (Power, Ground, Serial Data, and Subsystem References 1 of 4)

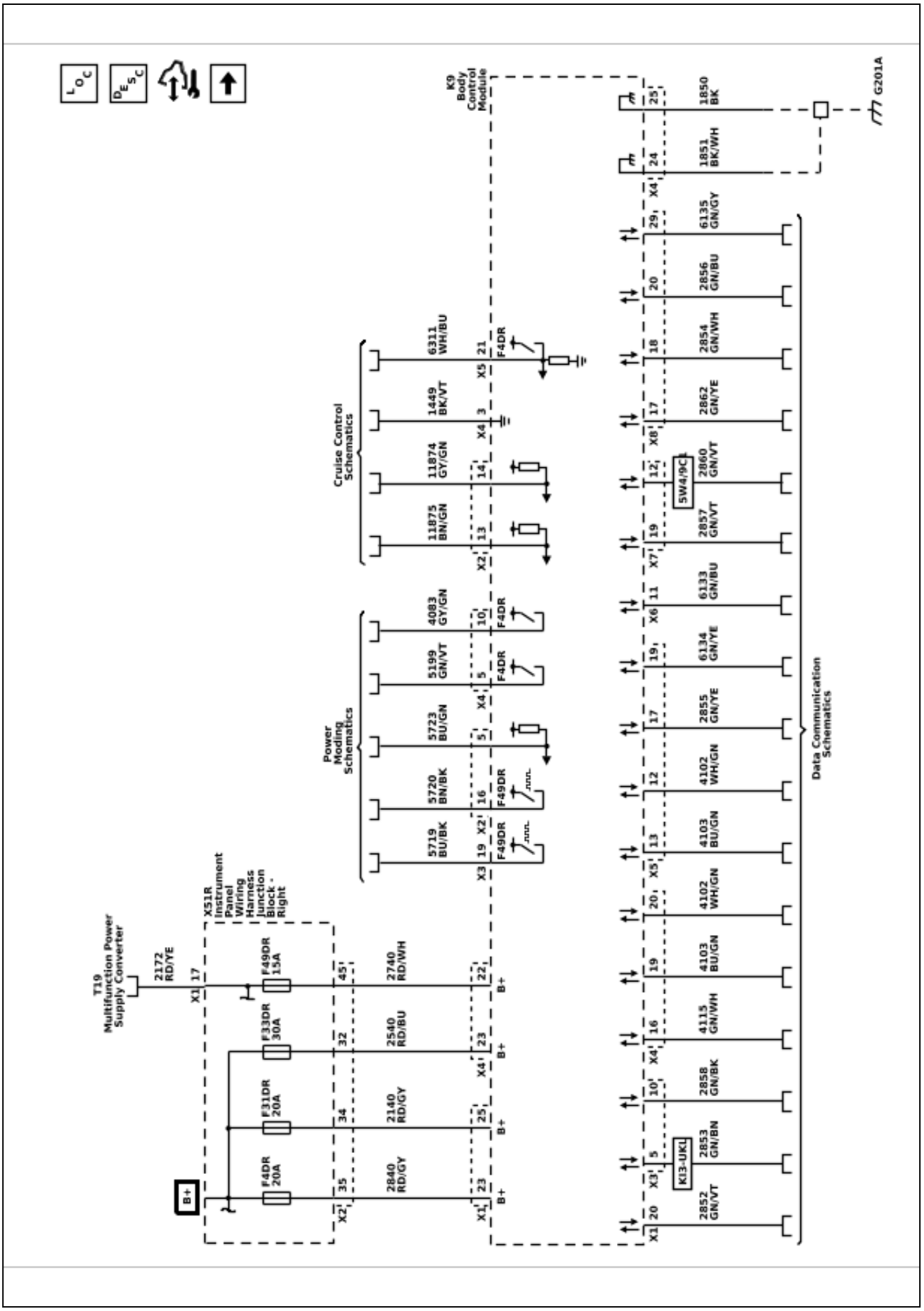

Body Control System Schematics (Subsystem References 2 of 4)

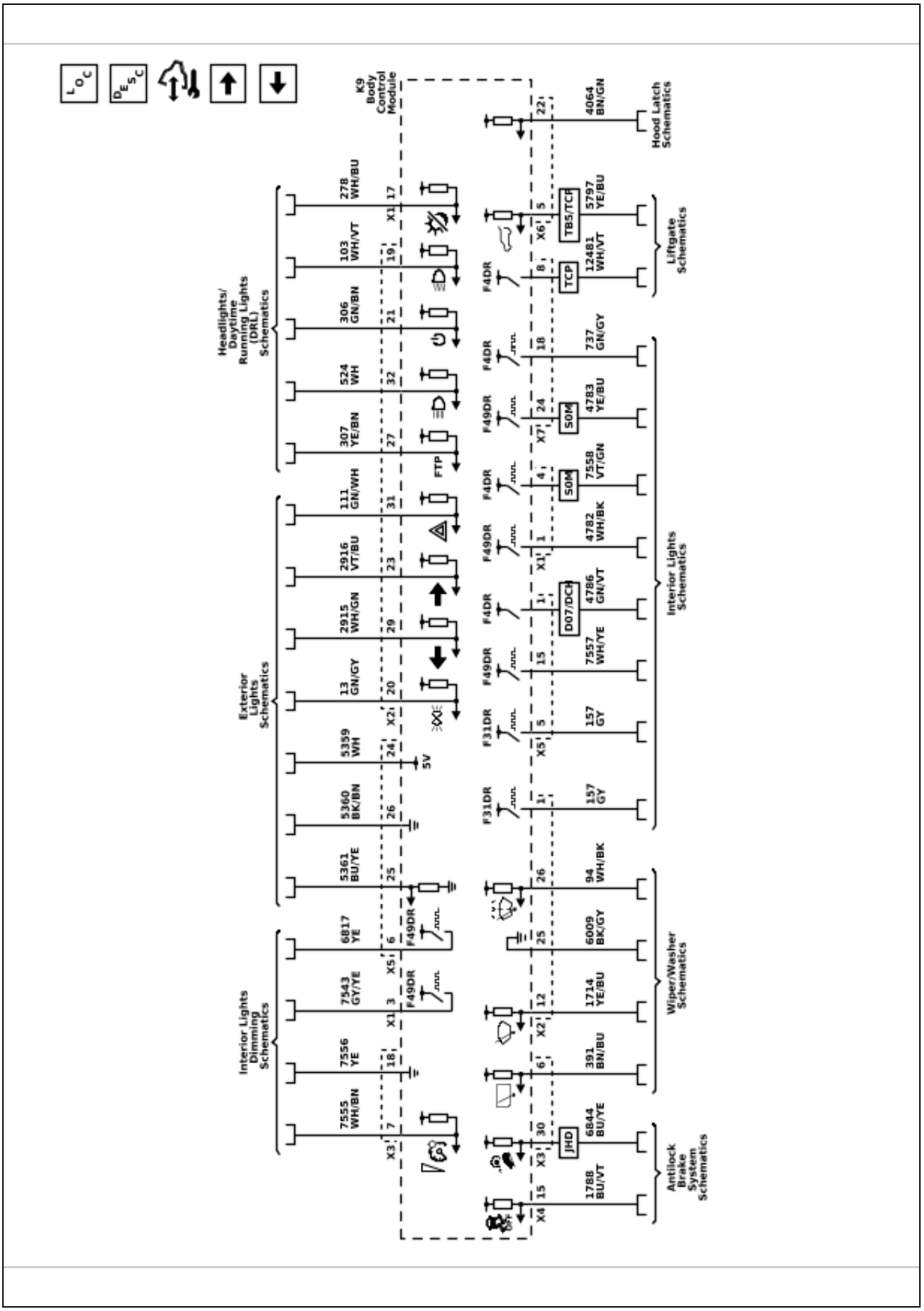

6613433

6613434

Body Control System Schematics (Subsystem References 3 of 4)

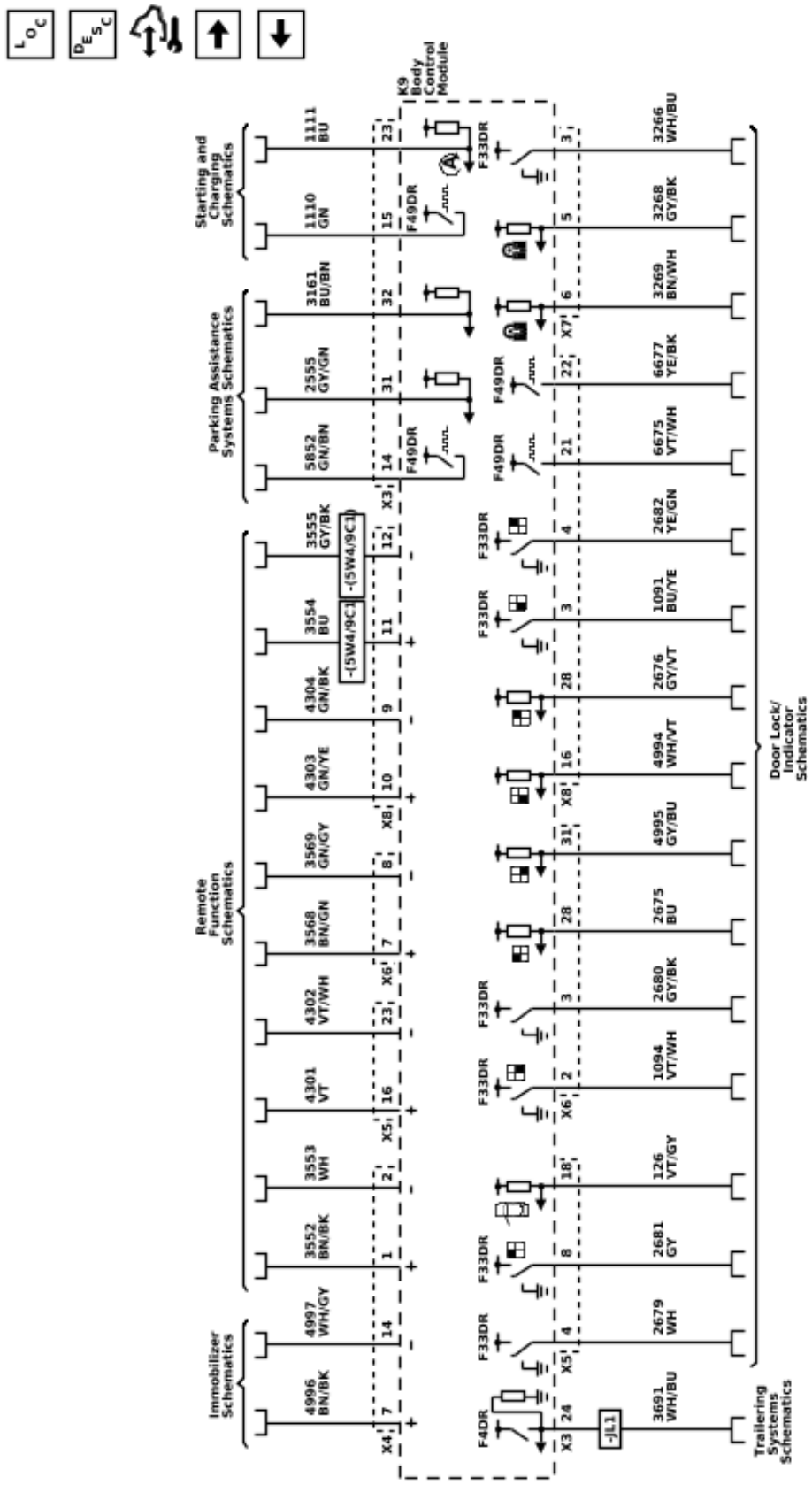

Body Control System Schematics (Subsystem References 4 of 4)

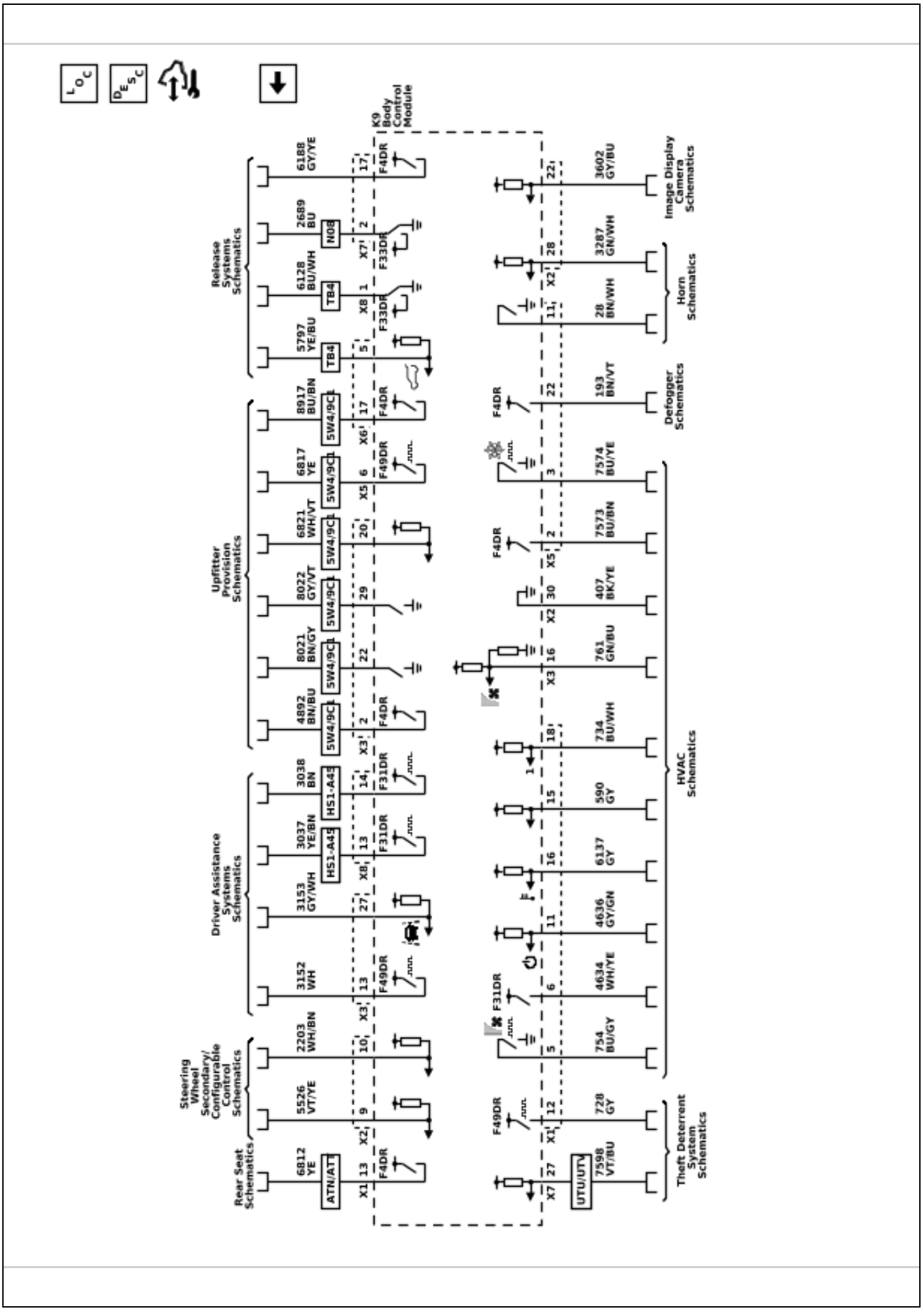

6613418

Description and Operation

Data Link Communications Description and Operation

Note: This is an overview of different serial data buses used by control modules to communicate with each others. Use *Data Communication Schematics 6-3* to find out which serial data buses are configured for a specific vehicle.

Data Link Communications Overview

There are many components in a vehicle that rely on information from other sources, transmit information to other sources, or both. Serial data communication networks provide a reliable, cost effective, way for various components of the vehicle to “talk” to one another and share information.

General Motors uses a number of different communication buses to ensure the timely and efficient exchange of information between control modules. When compared to each other, some of these buses are different in nature as far as speed, signal characteristics, and behavior.

On the other hand, when other buses are compared to each other they have similar characteristics and simply operate in parallel. In this case they are used to group together components which have high interaction. Examples are the Controller Area Network (CAN), private CAN, and Local Interconnect Network (LIN) buses. This allows them to communicate with each other on a bus with reduced message congestion insuring faster and the more timely exchange of information than if all vehicle control modules were on a single bus.

The majority of information that exists within a given network generally stays local; however some information will have to be shared on other networks. Control modules designated as Gateways perform the function of transferring information between the various buses. A Gateway module is connected to at least 2 buses and will interact with each network according to its message strategy and transmission models.

CAN provides the capability for a receiving control module to monitor message transmissions from other control modules in order to determine if messages of interest are not being received. The primary purpose is to allow reasonable default values to be substituted for the information no longer being received. Additionally, a control module may set a Diagnostic Trouble Code (DTC) to indicate that the control module it is expecting information from is no longer communicating.

K9 Body Control Module (BCM)

The body control system consists of the K9 Body Control Module, communications, and various input and outputs. Some inputs, outputs and messages require other control modules to interact with the K9 Body Control Module. The K9 Body Control Module also has discrete input and output terminals to control the vehicle's body functions. The K9 Body Control Module is wired to CAN bus and multiple LIN buses and acts as a gateway between them.

The various K9 Body Control Module input and output circuits are illustrated in the corresponding functional areas on the K9 Body Control Module electrical schematics. Refer to the *Body Control System Schematics 6-28* for more detailed information.

K56 Serial Data Gateway Module

The K56 Serial Data Gateway Module gates messages between the CAN networks described in the Controller Area Network (CAN) Bus Description section below. The K56 Serial Data Gateway Module needs to know what CAN control modules are present on a given vehicle in order to enable/disable loss of communication DTCs and to know which CAN control modules to track for their communication status. The K56 Serial Data Gateway Module has the ability to learn the diagnostic addresses list of CAN control modules to identify what CAN control modules are equipped on the vehicle and what CAN buses they are on. If the K56 Serial Data Gateway Module is replaced, this learn/verification process will have to be done again through K56 Serial Data Gateway Module programming and setup procedure in SPS. This learn process will not cause any previously learned contents to be forgotten/overwritten. If the learn process is not done on a new K56 Serial Data Gateway Module, DTC U1977 will be set until the learn procedure is executed. If the learn is invalid due to control module internal malfunction or a K56 Serial Data Gateway Module swap, DTC U3000 42 or DTC U3002 56 will be set. If any of these DTCs sets, the K56 Serial Data Gateway Module will enable loss of communication for all CAN control modules. This will result in loss of communication DTCs being set against CAN control modules that are not equipped on the vehicle.

A fault can be localized by monitoring the normal mode messages on a CAN bus. The K56 Serial Data Gateway Module will monitor one signal per CAN control module per CAN bus to determine control module status. When a signal times out, a loss of communication event will be started.

Controller Area Network (CAN) Bus Description

The CAN buses are used where data needs to be exchanged at a high enough rate to minimize the delay between the occurrence of a change in sensor value and the reception of this information by a control device using the information to adjust vehicle system performance.

Each CAN serial data network consists of two twisted wires. One signal circuit is identified as CAN-High and the other signal circuit is identified as CAN-Low. At each end of the data bus there is a 124 Ω termination resistor between the CAN-High and CAN-Low circuits. Most CAN control modules have an internal resistance of 4.950K Ω. There may be one or two CAN control modules that have a higher internal resistance like the K60 Column Lock Module which has an internal resistance of 77.4K Ω. The internal resistance of CAN control modules causes lower terminating resistor reading when splitting the CAN network to check for faults. The more CAN control modules on the network the lower the terminating resistor will read.

The data to be transmitted over a CAN bus is represented by the voltage difference between the CAN-High signal voltage and the CAN-Low signal voltage. Data symbols (1's and 0's) are transmitted sequentially at the following rate:

- CAN 1 (circuits 4986 & 4987) = 500 Kbit/s
- CAN 2 (circuits 4978 & 4979) = 2 Mbit/s
- CAN 3 (circuits 4976 & 4977) = 500 Kbit/s
- CAN 4 (circuits 4100 & 4101) = 500 Kbit/s
- CAN 5 (circuits 4984 & 4985) = 500 Kbit/s
- CAN 6 (circuits 4980 & 4981) = 5 Mbit/s
- CAN 7 (circuits 4982 & 4983) = 5 Mbit/s
- CAN 8 (circuits 4104 & 4105) = 2 Mbit/s
- CAN 9 (circuits 4102 & 4103) = 2 Mbit/s
- CAN 10 (circuits 10800 & 10801) = 2 Mbit/s

Classical CAN: CAN 1, CAN 3, CAN 4, and CAN 5 are Classical CAN buses. In Classical CAN, the entire message is transmitted at the same baud rate. The size of the data field is limited to 8 bytes.

CAN FD: CAN 2, CAN 8, CAN 9, and CAN 10 are CAN FD buses (FD = Flexible Data-Rate). In CAN FD, the data field of the message is transmitted at the same or at a faster baud rate. The size of the data field can be up to 64 bytes in length.

When the two wire bus is at rest the CAN-High and CAN-Low signal circuits are not being driven and this represents a logic "1". In this state both signal circuits are at the same voltage of 2.5 V. The differential voltage is approximately 0 V.

When a logic "0" is to be transmitted, the CAN-High signal circuit is driven higher to about 3.5 V and the CAN-Low circuit is driven lower to about 1.5 V. The differential voltage becomes approximately 2.0 (+/- 0.5) V.

The CAN 1, CAN 2, CAN 3, CAN 4, CAN 5, CAN 8, CAN 9, and CAN 10 buses are used to communicate between the K56 Serial Data Gateway Module and other CAN control modules.

The CAN 8 and CAN 9 buses are reserved for the following systems:

- The CAN 8 bus is reserved for most control modules and sensors related to active safety system, if applicable.
- The CAN 9 bus is reserved for most control modules and sensors related to Hybrid/EV system, if applicable.

The following CAN buses are between the X84 Data Link Connector and the K56 Serial Data Gateway Module:

- The CAN 6 bus is used for CAN diagnostics and programming.
- The CAN 7 bus is used for programming by assembly plant only.
- The Private Presentation CAN 1 bus (circuits 2577 & 2578) is used by Engineering to observe data communications on CAN buses not directly accessible at the X84 Data Link Connector. It requires special security access and will not be used in a service environment.
- The Private Presentation CAN 2 bus (circuits 2579 & 2580) is used by Engineering to observe data communications on CAN buses not directly accessible at the X84 Data Link Connector. It requires special security access and will not be used in a service environment.

Private Powertrain CAN Bus Description

The Private Powertrain CAN bus (circuits 4054 & 4055) is reserved for Powertrain components. It has a transmission rate of 500 Kbit/s. Sometimes communication is required between the Private Powertrain CAN bus and another CAN bus. This is accomplished by using the K20 Engine Control Module / K45 Powertrain Control Module (for gas vehicles) or K16 Battery Energy Control Module (for electric vehicles) as the Gateway module. Since the Private Powertrain CAN bus and other CAN buses operate in the same manner, the diagnostics for each are similar.

Local Interconnect Network (LIN) Bus Description

The LIN Bus consists of a single wire with a transmission rate of 10.417 Kbit/s or 19.23 Kbit/s. This bus is used to exchange information between a master control module and other smart devices which provide supporting functionality. This type of configuration does not require the capacity or speed of a CAN bus and is thus relatively simpler.

The data symbols (1's and 0's) to be transmitted are represented by different voltage levels on the communication bus. When the LIN Bus is at rest and is not being driven, the signal is in a high voltage state of approximately Vbatt. This represents a logic "1". When a logic "0" is to be transmitted, the signal voltage is driven low to about ground (0.0 V).

Ethernet Bus Description

Ethernet is a data communication technology that uses a single twisted copper pair of wires at speeds of 100 Mbit/s and 1000 Mbit/s. The Ethernet system uses point-to-point communication that is connected via an Ethernet switch [Module <--> Switch <--> Module]. The Ethernet bus does not use terminating resistors.

The K56 Serial Data Gateway Module and the A11 Radio have an Ethernet switch that connects to other Ethernet modules. The K56 Serial Data Gateway Module and the A11 Radio communicate with other devices and systems in the vehicle via CAN and LIN buses. Diagnostic Trouble Codes will be read on CAN to diagnose Ethernet, LIN and system faults.

Note: Ethernet harness failures should only be repaired using an appropriate kit to perform de-pin/re-pin overlays or in cases where the wiring harness repair kits are not available, the entire harness should be replaced. No crimps or splicing should be performed on the Ethernet wiring harness.

Ethernet 1

Ethernet bus 1 consists of 2 twisted pair of wires [1 pair for Ethernet bus 1R (circuits 4972 & 4973) and 1 pair for Ethernet bus 1T (circuits 4974 & 4975)]. It is connected between X84 Data Link Connector (DLC) and K56 Serial Data Gateway Module. This bus is used for diagnostics and service programming of control modules using Ethernet instead of CAN. The K56 Serial Data Gateway Module will convert Ethernet serial data to CAN as necessary, and vice versa. There is an Ethernet enable circuit (circuit 7207) which can be used to wake up the K56 Serial Data Gateway Module for Ethernet diagnostic and programming.

Ethernet 2

Ethernet bus 2 (circuits 4757 & 4758) is for connection between the A11 Radio and the K56 Serial Data Gateway Module.

Ethernet 3

Ethernet bus 3 (circuits 7208 & 7209) is for connection between the following control modules depending on vehicle configuration:

- K56 Serial Data Gateway Module and K179 Automated Driving Mapping Module.
- K56 Serial Data Gateway Module and K124 Image Processing Module.
- K56 Serial Data Gateway Module and B174W Front View Camera - Windshield.

Ethernet 4

Ethernet bus 4 (circuits 7210 & 7211) is for connection between the following control modules:

- K56 Serial Data Gateway Module and K73 Telematic Control Module for vehicles equipped with IOR radio.
- A11 Radio and K73 Telematic Control Module for vehicles equipped with other radios.

Ethernet 5

Ethernet bus 5 (circuits 7212 & 7213) is for connection between the A11 Radio and P22F Video Display - Right Front Seat Back.

Ethernet 6

Ethernet bus 6 (circuits 7214 & 7215) is for connection between the A11 Radio and T3 Audio Amplifier.

Ethernet 7

Ethernet bus 7 (circuits 7216 & 7217) is for connection between the K56 Serial Data Gateway Module and P16 Instrument Panel Cluster Control Module or K190 Off-Board Charger Control Module.

Ethernet 11

Ethernet bus 11 (circuits 7224 & 7225) is for connection between the K124 Image Processing Module and K179 Automated Driving Mapping Module.

Ethernet 14

Ethernet bus 14 (circuits 7230 & 7231) is for connection between the A11 Radio and P29 Head-Up Display.

Ethernet 15

Ethernet bus 15 (circuits 7232 & 7233) is for connection between the K56 Serial Data Gateway Module, K161 Vehicle Performance Data Recorder, and P22F Video Display - Passenger Seat Back.

X84 Data Link Connector (DLC)

The X84 Data Link Connector is a standardized 16-cavity connector. Connector design and location is dictated by an industry wide standard, and is required to provide the following:

- Terminal 1: CAN Bus 7 Serial Data [+]
- Terminal 2: Private Presentation CAN Bus 1 Serial Data [+]
- Terminal 3: Ethernet Bus 1R [+]
- Terminal 4: Scan tool power ground
- Terminal 5: Common signal ground
- Terminal 6: CAN Bus 6 Serial Data [+]
- Terminal 7: Private Presentation CAN Bus 2 Serial Data [+]
- Terminal 8: Ethernet Bus 1 Enable Signal
- Terminal 9: CAN Bus 7 Serial Data [-]
- Terminal 10: Private Presentation CAN Bus 1 Serial Data [-]
- Terminal 11: Ethernet Bus 1R [-]
- Terminal 12: Ethernet Bus 1T [+]
- Terminal 13: Ethernet Bus 1T [-]
- Terminal 14: CAN Bus 6 Serial Data [-]
- Terminal 15: Private Presentation CAN Bus 2 Serial Data [-]
- Terminal 16: Scan tool power, B+

Serial Data Reference

The scan tool communicates over the various buses on the vehicle. When a scan tool is installed on a vehicle, the scan tool will try to communicate with every control module that could be optioned into the vehicle. If an option is not installed on the vehicle, the scan tool will display No Communication for that optional control module. In order to avert misdiagnoses of No Communication with a specific control module, refer to [Link target (target-id 148085-) not found] for a list of control modules and the buses they communicate with. Use schematics and specific vehicle build RPO codes to determine optional control modules.

Electrical Component and Inline Harness Connector End Views

Component Locator

X50A Engine Wiring Harness Junction Block Label

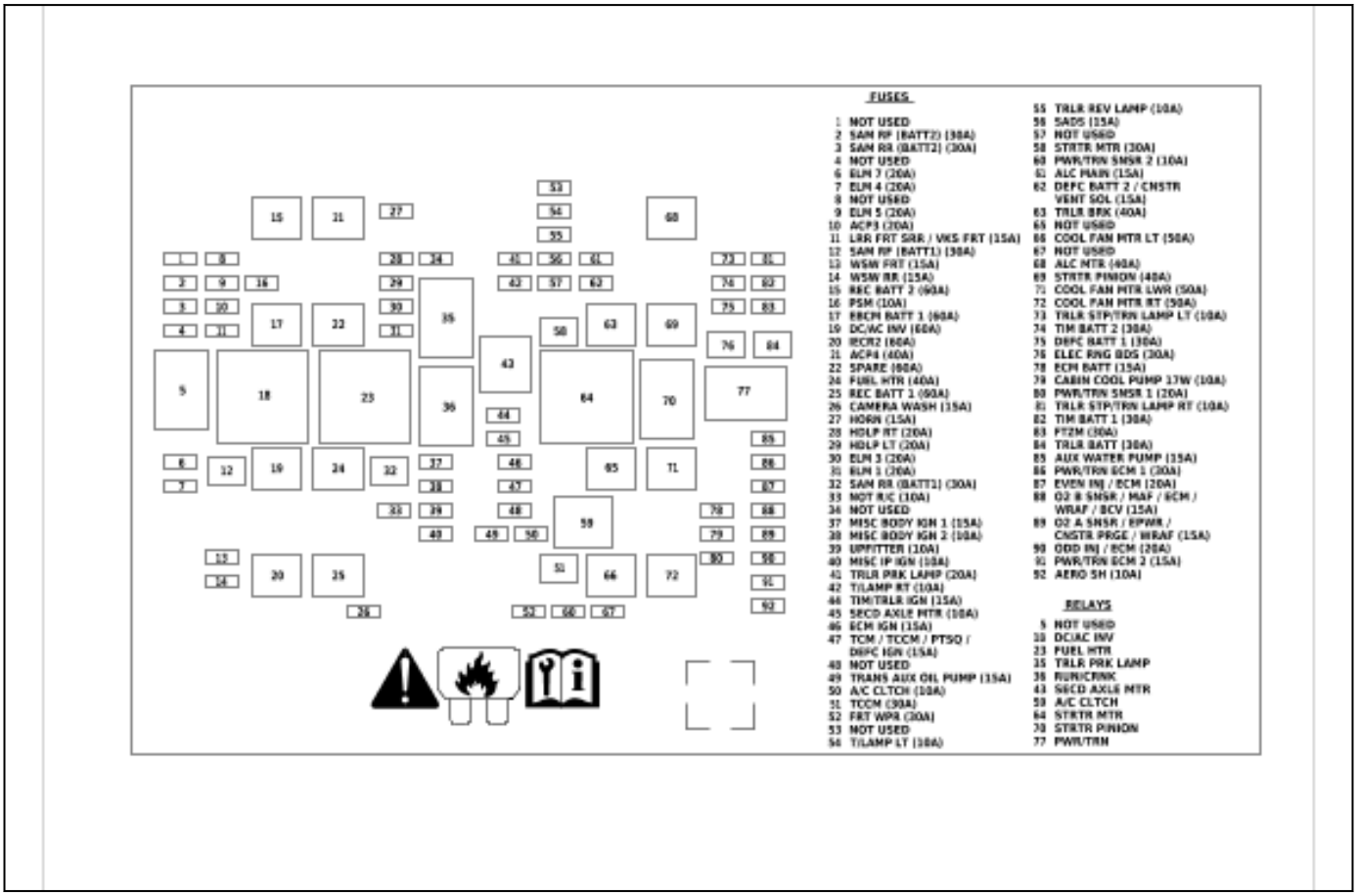

6665305

X50A Engine Wiring Harness Junction Block Top View

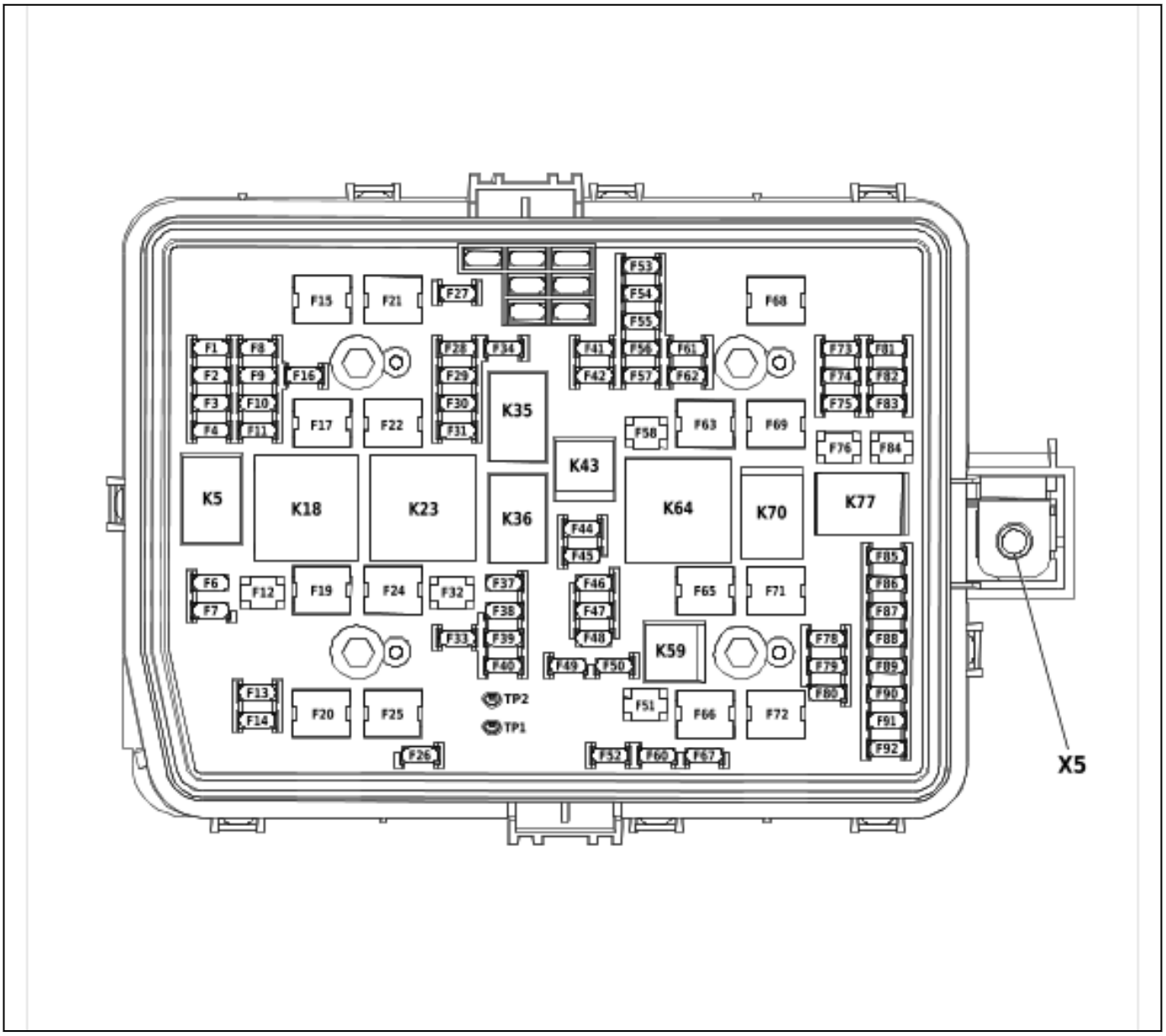

5619644

Usage Table

No.	Device Label Name	Device Assigned Name	Rating	Description
Fuses				
F1	NOT USED	F1UA	—	• Not Used
F2	SAM RF (BATT2)	F2UA	30A	• Not Used
F3	SAM RR (BATT2)	F3UA	30A	• Not Used
F4	NOT USED	F4UA	—	• Not Used
F6	ELM 7	F6UA	20A	• K219 Lighting Control Module
F7	ELM 4	F7UA	20A	• K219 Lighting Control Module
F8	NOT USED	F8UA	—	• Not Used
F9	ELM 5	F9UA	20A	• K219 Lighting Control Module

No.	Device Label Name	Device Assigned Name	Rating	Description
F10	ACP3	F10UA	20A	• K124 Image Processing Module (UKL)
F11	LRR FRT SRR / VKS FRT	F11UA	15A	• B233B Forward Range Radar Sensor - Long Range • B233LF Short Range Radar Sensor - Left Front (UKL) • B233RF Short Range Radar Sensor - Right Front (UKL) • B342A UHF Low Energy Remote Control Access Sensor Transceiver 1 (BOR/BOY) • B342C UHF Low Energy Remote Control Access Sensor Transceiver 3 (BOR/BOY)
F12	SAM RF (BATT1)	F12UA	30A	• Not Used
F13	WSW FRT	F13UA	15A	• KR11 Windshield Washer Pump Relay
F14	WSW RR	F14UA	15A	• KR6 Rear Window Washer Pump Relay
F15	REC BATT 2	F15UA	60A	• X53A Body Wiring Harness Junction Block - Rear
F16	PSM	F16UA	10A	• P25 Content Theft Deterrent Alarm (UTR)
F17	EBCM BATT 1	F17UA	60A	• K160 Brake System Control Module • X400
F19	DC/AC INV	F19UA	60A	• T1 Accessory AC and DC Power Control Module (KI4/KI5)
F20	IECR2	F20UA	60A	• X51R Instrument Panel Wiring Harnes Junction Block - Right
F21	ACP4	F21UA	40A	• Not Used
F22	SPARE	F22UA	60A	• Not Used
F24	FUEL HTR	F24UA	40A	• KR22 Fuel Heater Relay (LZ0)
F25	REC BATT 1	F25UA	60A	• X53A Body Wiring Harness Junction Block - Rear
F26	CAMERA WASH	F26UA	15A	• Not Used
F27	HORN	F27UA	15A	• P13 Horn
F28	HDLP RT	F28UA	20A	• E13RA Front Headlamp - Right
F29	HDLP LT	F29UA	20A	• E13LA Front Headlamp - Left
F30	ELM 3	F30UA	20A	• K219 Lighting Control Module
F31	ELM 1	F31UA	20A	• K219 Lighting Control Module
F32	SAM RR (BATT1)	F32UA	30A	• Not Used
F33	NOT R/C	F33UA	10A	• K60 Column Lock Module
F34	NOT USED	F34UA	—	• Not Used
F37	MISC BODY IGN 1	F37UA	15A	• K38 Chassis Control Module (G96) • K160 Brake System Control Module • P43 Forward Collision Alert Display (UEU-UV6)

No.	Device Label Name	Device Assigned Name	Rating	Description
F38	MISC BODY IGN 2	F38UA	10A	• K219 Lighting Control Module • M73A Front Seat Back Ventilation Blower - Driver (KQV) • M73B Front Seat Back Ventilation Blower - Passenger (KQV) • M73D Front Seat Cushion Ventilation Blower - Driver (KQV) • M73P Front Seat Cushion Ventilation Blower - Passenger (KQV) • T1 Accessory AC and DC Power Control Module (KI4/KI5)
F39	UPFITTER	F39UA	10A	• W12FC Blunt Cut - Front Seat/Center Console (5W4/9C1) • W12RCL Blunt Cut - Left Rear Cargo Trim (5W4/9C1)
F40	MISC IP IGN	F40UA	10A	• A10 Inside Rearview Mirror (DD8/DRZ) • E40 Air Heater (C3A) • K36 Restraints Control Module • X51AX Instrument Panel Wiring Harness Junction Block - Auxiliary (5W4/9C1)
F41	TRLR PRK LAMP	F41UA	20A	• X88B Tow Vehicle Electrical Receptacle (-UET)
F42	T/LAMP RT	F42UA	10A	• E42R Rear Body Structure Stop Lamp - Right
F44	TIM / TRLR IGN	F44UA	15A	• K68 Trailer Lamp Control Module (UET)
F45	SECD AXLE MTR	F45UA	10A	• M26 Front Drive Axle Actuator (NP0/NQH)
F46	ECM IGN	F46UA	15A	• K20 Engine Control Module
F47	TCM / TCCM / PTSQ / DEFC IGN	F47UA	15A	• K69 Transfer Case Control Module (NP0/NQH) • K71 Transmission Control Module • K115 Reductant Control Module (LZ0)
F48	NOT USED	F48UA	—	• Not Used
F49	TRANS AUX OIL PUMP	F49UA	15A	• G5 Automatic Transmission Auxiliary Fluid Pump
F50	A/C CLTCH	F50UA	10A	• Q2 Air Conditioning Clutch
F51	TCCM	F51UA	30A	• K69 Transfer Case Control Module (NP0/NQH)
F52	FRT WPR	F52UA	30A	• KR12B Windshield Wiper Motor Relay • KR12C Windshield Wiper Motor Speed Control Relay
F53	NOT USED	F53UA	—	• Not Used
F54	T/LAMP LT	F54UA	10A	• E42L Rear Body Structure Stop Lamp - Left
F55	TRLR REV LAMP	F55UA	10A	• X88B Tow Vehicle Electrical Receptacle (-UET)
F56	SADS	F56UA	15A	• K19 Suspension Control Module (Z95)
F57	NOT USED	F57UA	—	• Not Used
F58	STRTR MTR	F58UA	30A	• KR27 Starter Relay
F60	PWR/TRN SNSR 2	F60UA	10A	• B195A Nitrogen Oxides Sensor 1 (LZ0) • T19 Multifunction Power Supply Converter (LZ0)
F61	ALC MAIN	F61UA	15A	• K5 Vehicle Level Control Module (F47)
F62	DEFC BATT 2 / CNST VENT SOL	F62UA	15A	• K115 Reductant Control Module (LZ0) • Q13 Evaporative Emission Canister Vent Solenoid Valve (L84/L87)

No.	Device Label Name	Device Assigned Name	Rating	Description
F63	TRLR BRK	F63UA	40A	• K67 Trailer Brake Control Module (JL1) • W24 Blunt Cut - Trailer Brakes Provision (-JL1)
F65	NOT USED	F65UA	—	• Not Used
F66	COOL FAN MTR LT	F66UA	50A	• G10L Cooling Fan Motor - Left
F67	NOT USED	F67UA	—	• Not Used
F68	ALC MTR	F68UA	40A	• K5 Automatic Level Control Module (F47)
F69	STRTR PINION	F69UA	40A	• KR27C Engine Restart Relay (L84/L87)
F71	COOL FAN MTR LWR	F71UA	50A	• G10LW Engine Cooling Fan Motor - Lower (LZ0)
F72	COOL FAN MTR RT	F72UA	50A	• G10R Engine Cooling Fan Motor - Right (L84/L87)
F73	TRLR STP / TRN LAMP LT	F73UA	10A	• X88B Tow Vehicle Electrical Receptacle (-UET)
F74	TIM BATT 2	F74UA	30A	• K68 Trailer Lamp Control Module (UET)
F75	DEFC BATT 1	F75UA	30A	• K115 Reductant Control Module (LZ0)
F76	ELEC RNG BDS	F76UA	30A	• K4 Running Board Control Module (B3L)
F78	ECM BATT	F78UA	15A	• K20 Engine Control Module
F79	CABIN COOL PUMP 17W	F79UA	10A	• G17 Heater Coolant Pump
F80	PWR/TRN SNSR 1	F80UA	20A	• B136 Exhaust Particulate Matter Sensor (LZ0) • B195B Nitrogen Oxides Sensor 2 (LZ0) • B195C Nitrogen Oxides Sensor 3 (LZ0) • K111 Fuel Pump Power Control Module (LZ0) • R29 Fuel Filter (LZ0)
F81	TRLR STP/TRN LAMP RT	F81UA	10A	• X88B Tow Vehicle Electrical Receptacle (-UET)
F82	TIM BATT 1	F82UA	30A	• K68 Trailer Lamp Control Module (UET)
F83	FTZM	F83UA	30A	• K111 Fuel Pump Driver Power Module
F84	TRLR BATT	F84UA	30A	• X88B Tow Vehicle Electrical Receptacle (UET)
F85	AUX WATER PUMP	F85UA	15A	• M10 Charge Air Cooler Coolant Pump (LZ0)
F86	PWR/TRN ECM 1	F86UA	30A	• K20 Engine Control Module
F87	EVEN INJ / ECM	F87UA	20A	• K20 Engine Control Module (L84/L87) • T8B Ignition Coil 2 (L84/L87) • T8D Ignition Coil 4 (L84/L87) • T8F Ignition Coil 6 (L84/L87) • T8H Ignition Coil 8 (L84/L87)
F88	O2 B SNSR / MAF / ECM / WRAF / BCV	F88UA	15A	• B52D Heated Oxygen Sensor - Bank 1 Sensor 2 (L84/L87) • B52E Heated Oxygen Sensor - Bank 2 Sensor 1 (L84/L87) • B52F Heated Oxygen Sensor - Bank 2 Sensor 2 (L84/L87) • B75 Mass Airflow Sensor • K20 Engine Control Module

No.	Device Label Name	Device Assigned Name	Rating	Description
F89	O2 A SNSR / EPWR / CNSTR PRGE / WRAF	F89UA	15A	• B52C Heated Oxygen Sensor - Bank 1 Sensor 1 (L84/L87) • Q12 Evaporative Emission Canister Purge Solenoid Valve (L84/L87) • Q44 Engine Oil Pressure Control Solenoid Valve (L87)
F90	ODD INJ / ECM	F90UA	20A	• K20 Engine Control Module • T8A Ignition Coil 1 (L84/L87) • T8C Ignition Coil 3 (L84/L87) • T8E Ignition Coil 5 (L84/L87) • T8G Ignition Coil 7 (L84/L87)
F91	PWR/TRN ECM 2	F91UA	15A	• K20 Engine Control Module (L84/L87)
F92	AERO SH	F92UA	10A	• M96 Active Grille Air Shutter Actuator • M96B Active Grille Air Shutter 2 Actuator (WMI)
Relays				
K5	NOT USED	—	—	• Not Used
K18	DC/AC INV	KR202 Accessory AC and DC Power Control Module Relay	—	• F19UA (KI4/KI5)
K23	FUEL HTR	KR22 Fuel Heater Relay	—	• R29 Fuel Filter (LZ0)
K35	TRLR PRK LAMP	KR125 Trailer Parking Lamp Relay	—	• F41UA (-UET)
K36	RUN/CRNK	KR73 Ignition Main Relay	—	• F33UA • F37UA • F38UA • F39UA • F40UA • F44UA • F46UA • F47UA • F48UA
K43	SECD AXLE MTR	KR203 Front Drive Axle Actuator Relay	—	• F45UA (NP0/NQH)
K59	A/C CLTCH	KR29 A/C Compressor Clutch Relay	—	• F50UA
K64	STRTR MTR	KR27 Starter Relay	—	• M64 Starter Motor
K70	STRTR PINION	KR27C Engine Restart Relay	—	• M64 Starter Motor (L84/L87)
K77	PWR/TRN	KR75 Engine Controls Ignition Relay	—	• F67UA • F85UA • F86UA • F87UA • F88UA • F89UA • F90UA

No.	Device Label Name	Device Assigned Name	Rating	Description
				• F91UA • F92UA • KR29 Air Conditioning Compressor Relay • KR200 Engine Controls Sensor Supply Voltage Relay
Note: Relays listed below are non-serviceable Printed Circuit Board (PCB) relays and are internal to the block.				
—	—	KR3 Horn Relay	—	• F27UA
—	—	KR6 Rear Window Washer Pump Relay	—	• G24 Windshield Washer Pump
—	—	KR11 Windshield Washer Pump Relay	—	• G24 Windshield Washer Pump
—	—	KR12B Windshield Wiper Motor Relay	—	• M75 Windshield Wiper Motor
—	—	KR12C Windshield Wiper Motor Speed Control Relay	—	• M75 Windshield Wiper Motor
—	—	KR61 Trailer Backup Lamp Relay	—	• F55UA
—	—	KR63L Trailer Stop/ Turn Signal Lamp Relay - Left	—	• F73UA
—	—	KR63R Trailer Stop/ Turn Signal Lamp Relay - Right	—	• F81UA
—	—	KR200 Engine Controls Sensor Supply Voltage Relay	—	• F60UA • F80UA
Test Points				
TP1	CKT 95	TP1	—	• KR12C Windshield Wiper Speed Control Relay
TP2	CKT 92	TP2	—	• KR12C Windshield Wiper Speed Control Relay

X50A Engine Wiring Harness Junction Block Bottom View

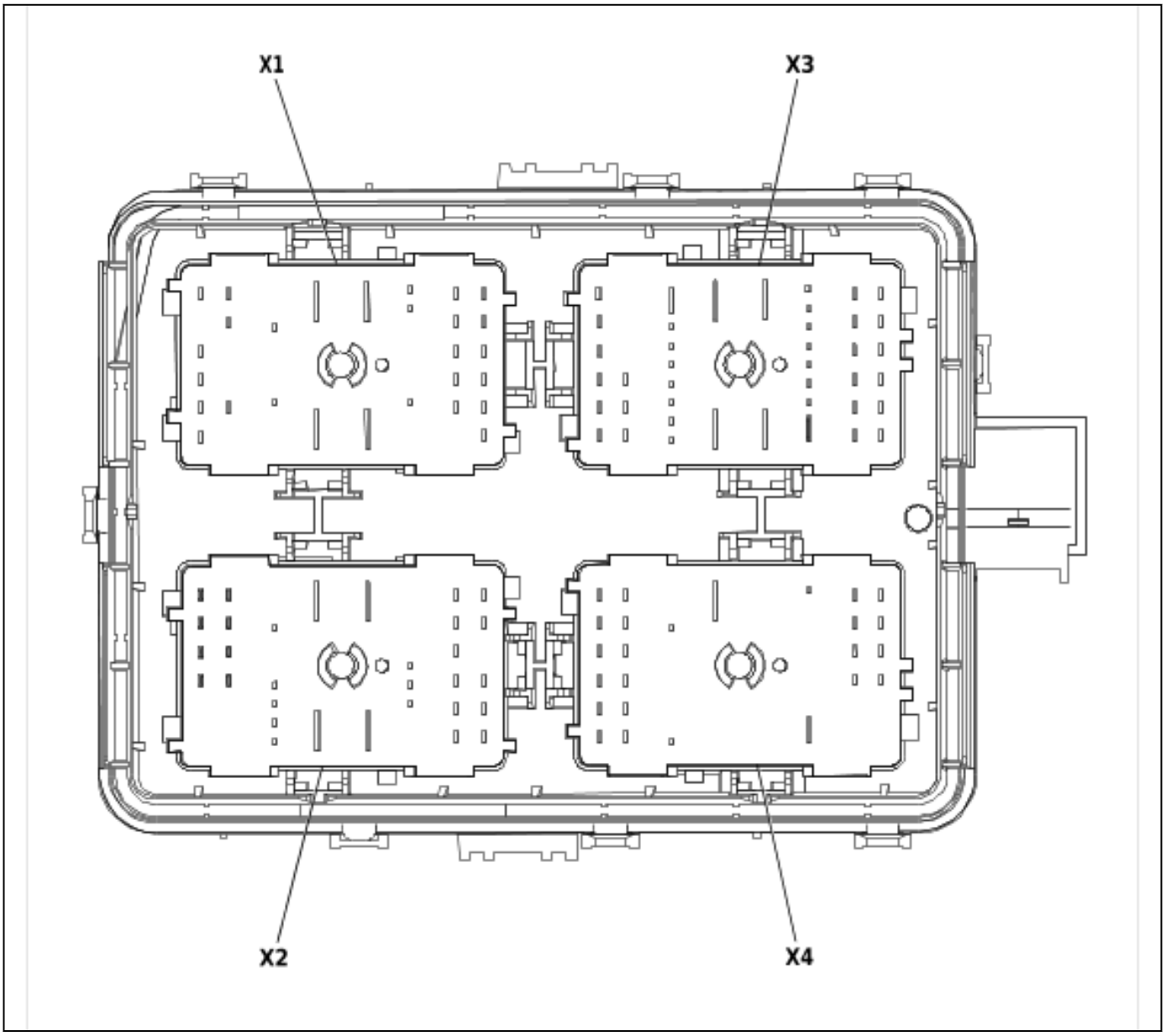

5041382

X50A Engine Wiring Harness Junction Block X1

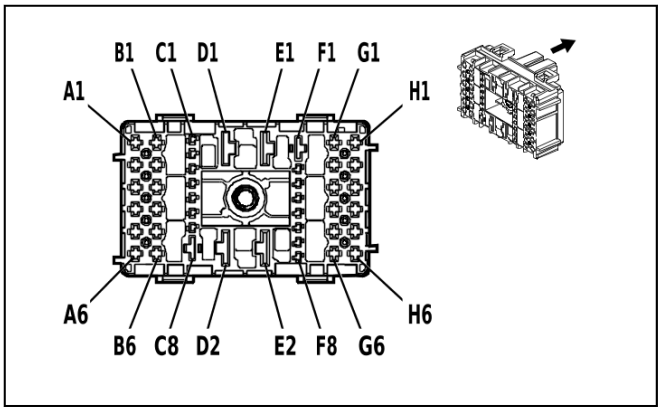

4994109

Connector Part Information

- Harness Type: Body Wiring Harness
- OEM Connector: 33384590
- Service Connector: 19370824
- Description: 44-Way F 1.5, 2.8, 6.3 CTS, 9.5 MCON-LL Series(BU)

Terminal Part Information

Terminal Type ID	Terminated Lead	Diagnostic Test Probe	Terminal Removal Tool
I	19369711	J-35616-14 (GN)	EL-38125-560A
II	84764079	J-35616-44 (YE)	J-38125-11A
III	84779405	J-35616-35 (VT)	J-38125-215A
IV	Not required	J-35616-22 (RD)	No Tool Required

X50A Engine Wiring Harness Junction Block X1

Pin	Size	Color	Circuit	Function	Terminal Type ID	Option
A1	1	RD / VT	7140	Battery Positive Voltage	III	—
A2	1	RD / BU	540	Battery Positive Voltage	III	—
A3	—	—	—	Not Occupied	—	—
A4	0.75	BK	250	Ground	III	—
A5	0.75	GY / VT	228	Windshield Washer Pump Control	III	—
A6	0.75	BU / VT	392	Rear Window Washer Pump Control	III	—
B1 - C2	—	—	—	Not Occupied	—	—
C3	0.5	WH / GN	4628	DC/AC Inverter Relay Control	I	—
C4	0.35	BN / GY	2268	Windshield Washer Relay Control	I	—
C5 - C6	—	—	—	Not Occupied	—	—
C7	0.35	GN / WH	2270	Rear Window Washer Relay Control	I	—
C8	—	—	—	Not Occupied	—	—
D1	5	BN / BK	4629	DC/AC Inverter Control	II	—
D2	10	RD / WH	342	Battery Positive Voltage	IV	—
E1	—	—	—	Not Occupied	—	—
E2	10	RD / GN	1942	Battery Positive Voltage	IV	—
F1 - F5	—	—	—	Not Occupied	—	—

Pin	Size	Color	Circuit	Function	Terminal Type ID	Option
F6	0.35	WH / VT	860	Windshield Wiper Switch High Signal	I	—
F7 - G2	—	—	—	Not Occupied	—	—
G3	0.35	BU / VT	807	Ignition Off/Accessory Ignition Voltage	III	—
G4	0.5	GN / VT	5199	Run/Crank Relay Coil Control	III	—
G5	2	BK	150	Ground	III	—
G6	0.35	GY	91	Windshield Wiper Motor Relay Coil Control	III	—
H1	0.5	VT / WH	639	Run/Crank Ignition 1 Voltage	III	—
H2	0.5	VT / WH	1139	Run/Crank Ignition 1 Voltage	III	—
H3	0.75	VT / WH	4939	Run/Crank Ignition 1 Voltage	III	—
H4	0.5	VT / WH	239	Run/Crank Ignition 1 Voltage	III	—
H5	2	WH	92	Windshield Wiper Motor High Speed Control	III	—
H6	2	YE / BN	95	Windshield Wiper Motor Low Speed Control	III	—

X50A Engine Wiring Harness Junction Block X2

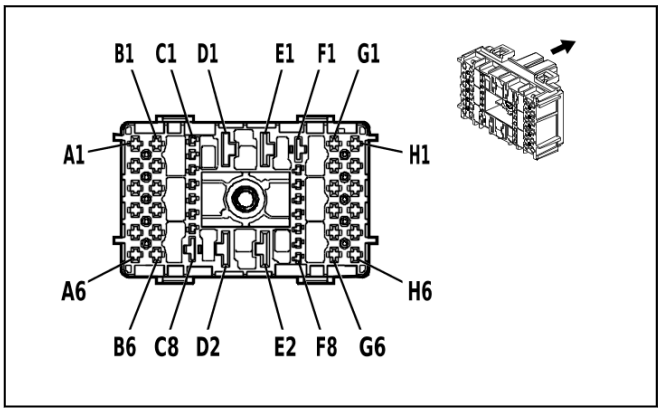

4994132

Connector Part Information

- Harness Type: Body Wiring Harness
- OEM Connector: 33384594
- Service Connector: 19371174
- Description: 44-Way F 1.5, 2.8, 6.3 CTS, 9.5 MCON-LL Series(GN)

Terminal Part Information

Terminal Type ID	Terminated Lead	Diagnostic Test Probe	Terminal Removal Tool
I	19369711	J-35616-14 (GN)	EL-38125-560A
II	84779405	J-35616-35 (VT)	J-38125-215A
III	Not required	J-35616-22 (RD)	No Tool Required

X50A Engine Wiring Harness Junction Block X2

Pin	Size	Color	Circuit	Function	Terminal Type ID	Option
A1 - B3	—	—	—	Not Occupied	—	—
B4	1	RD / GN	7740	Battery Positive Voltage	II	—
B5	1	RD / BN	13240	Battery Positive Voltage	II	—

Pin	Size	Color	Circuit	Function	Terminal Type ID	Option
B6	0.5	RD / GN	3140	Battery Positive Voltage	II	—
C1	0.35	YE / BU	318	Left Rear Trailer Stop/Turn Lamp Control	I	—
C2	0.35	GN / BN	319	Right Rear Trailer Stop/Turn Lamp Control	I	—
C3 - C6	—	—	—	Not Occupied	—	—
C7	0.5	RD / YE	13140	Battery Positive Voltage	I	—
C8	—	—	—	Not Occupied	—	—
D1	10	RD / WH	2942	Battery Positive Voltage	III	—
D2	10	RD / YE	442	Battery Positive Voltage	III	—
E1 - F2	—	—	—	Not Occupied	—	—
F3	0.35	BU / BN	38	Backup Lamp Relay Control	I	—
F4	0.35	BN / WH	28	Horn Relay Control	I	—
F5 - F8	—	—	—	Not Occupied	—	—
G1	0.75	BN / GY	29	Horn Control	II	—
G2	0.75	RD / GY	11240	Battery Positive Voltage	II	—
G3	1.5	RD / YE	740	Battery Positive Voltage	II	—
G4	1.5	RD / WH	640	Battery Positive Voltage	II	—
G5	1	RD / BN	1440	Battery Positive Voltage	II	—
G6	1	RD / BN	1140	Battery Positive Voltage	II	—
H1 - H4	—	—	—	Not Occupied	—	—
H5	0.75	RD / BU	11340	Battery Positive Voltage	II	—
H6	0.35	WH / BN	7055	Auxiliary Park Lamp Relay Control	II	—

X50A Engine Wiring Harness Junction Block X3

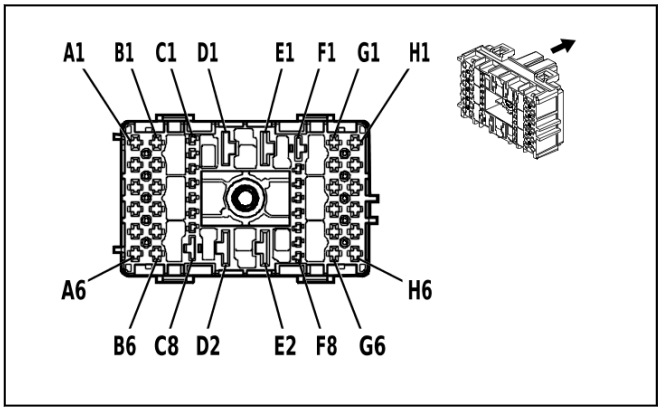

4992608

Connector Part Information

- Harness Type: Engine Wiring Harness
- OEM Connector: 33384584
- Service Connector: 19371176
- Description: 44-Way F 1.5, 2.8, 6.3 CTS, 9.5 MCON-LL Series(GY)

Terminal Part Information

Terminal Type ID	Terminated Lead	Diagnostic Test Probe	Terminal Removal Tool
I	19369711	J-35616-14 (GN)	EL-38125-560A
II	84764078	J-35616-42 (RD)	J-38125-215A
III	84764079	J-35616-44 (YE)	J-38125-11A
IV	84779405	J-35616-35 (VT)	J-38125-215A

X50A Engine Wiring Harness Junction Block X3

Pin	Size	Color	Circuit	Function	Terminal Type ID	Option
A1	0.75	VT / GN	439	Run/Crank Ignition 1 Voltage	IV	—
A2	0.5	VT / BK	2139	Run/Crank Ignition 1 Voltage	IV	—
A3	—	—	—	Not Occupied	—	—
A4	0.75	BN / GN	59	Air Conditioning Compressor Clutch Control	IV	—
A5	0.75	RD / VT	7940	Battery Positive Voltage	IV	—
A6	0.75	GN	8016	Secondary Axle Motor Control	IV	—
B1	2.5	YE	6	Starter Solenoid Crank Ignition Voltage	IV	—
B2	0.5	YE / BK	625	Starter Enable Relay Control	IV	—
B3	0.5	VT / GY	8017	Secondary Axle Motor Relay Control	IV	—
B4 - B5	—	—	—	Not Occupied	—	—
B6	2.5	RD / GY	1342	Battery Positive Voltage	IV	—
C1	0.5	BU	3017	Fuel Heater Relay 1 Control	I	—
C2	—	—	—	Not Occupied	—	—
C3	0.75	BK	6550	Ground	I	—
C4	0.5	WH / GY	459	Air Conditioning Compressor Clutch Relay Control	I	—
C5	0.5	GN / BU	3889	Powertrain Sensor Bus Relay Control	I	—
C6	1	VT / GN	4320	Powertrain Sensor Bus Enable	I	—
C7 - D1	—	—	—	Not Occupied	—	—
D2	5	RD / BU	1842	Battery Positive Voltage	III	—
E1	5	RD / BU	1542	Battery Positive Voltage	III	—
E2	5	RD / BN	1742	Battery Positive Voltage	III	—
F1	2.5	YE / GN	4358	Starter Pinion Solenoid Voltage	II	—
F2	0.5	YE / VT	4325	Starter Pinion Solenoid Actuator Relay Control	I	—
F3	0.5 0.75	RD / BN RD / BN	440 440	Battery Positive Voltage Battery Positive Voltage	I I	L84 / L87 LZ0
F4	0.5	YE	5991	Powertrain Relay Coil Control	I	—
F5	0.5	RD / BN	5940	Battery Positive Voltage	I	—
F6	—	—	—	Not Occupied	—	—
F7	0.5	VT / BU	5705	Powertrain Main Relay Control	I	—
F8	—	—	—	Not Occupied	—	—
G1	1	VT / BU	5294	Powertrain Main Relay Fused Supply Voltage 5	IV	—
G2 - G4	—	—	—	Not Occupied	—	—
G5	1	VT / GN	4320	Powertrain Sensor Bus Enable	IV	—

Pin	Size	Color	Circuit	Function	Terminal Type ID	Option
G6	0.75 2.5	VT / BU VT / BU	5291 5291	Powertrain Main Relay Fused Supply Voltage 2 Powertrain Main Relay Fused Supply Voltage 2	IV IV	L84 / L87 LZ0
H1	2 2.5	VT VT / BU	5290 5290	Powertrain Main Relay Fused Supply Voltage 1 Powertrain Main Relay Fused Supply Voltage 1	IV IV	L84 / L87 LZ0
H2	1	VT / BU	5292	Powertrain Main Relay Fused Supply Voltage 3	IV	—
H3	0.75	VT / BU	5294	Powertrain Main Relay Fused Supply Voltage 5	IV	—
H4	0.75	VT / BU	5293	Powertrain Main Relay Fused Supply Voltage 4	IV	—
H5	1	VT / BU	5291	Powertrain Main Relay Fused Supply Voltage 2	IV	—
H6	0.75	VT / BU	5290	Powertrain Main Relay Fused Supply Voltage 1	IV	—

X50A Engine Wiring Harness Junction Block X4

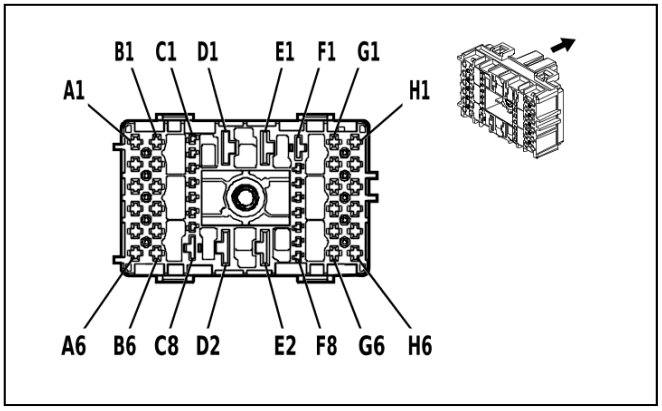

4993031

Connector Part Information

- Harness Type: Chassis Wiring Harness
- OEM Connector: 33384574
- Service Connector: 19371188
- Description: 44-Way F 1.5, 2.8, 6.3 CTS, 9.5 MCON-LL Series(BK)

Terminal Part Information

Terminal Type ID	Terminated Lead	Diagnostic Test Probe	Terminal Removal Tool
I	19369711	J-35616-14 (GN)	EL-38125-560A
II	84764078	J-35616-42 (RD)	J-38125-215A
III	84764079	J-35616-44 (YE)	J-38125-11A
IV	84779405	J-35616-35 (VT)	J-38125-215A

X50A Engine Wiring Harness Junction Block X4

Pin	Size	Color	Circuit	Function	Terminal Type ID	Option
A1 - A2	—	—	—	Not Occupied	—	—
A3	1.5	BN	2109	Trailer Park Lamp Control	IV	—
A4 - A5	—	—	—	Not Occupied	—	—
A6	0.75	VT / BK	339	Run/Crank Ignition 1 Voltage	IV	—
B1	—	—	—	Not Occupied	—	—

Pin	Size	Color	Circuit	Function	Terminal Type ID	Option
B2	0.75	GY	1624	Trailer Backup Lamp Control	IV	—
B3	0.75	RD / GN	2440	Battery Positive Voltage	IV	—
B4 - B6	—	—	—	Not Occupied	—	—
C1	0.75	RD / BN	2940	Battery Positive Voltage	I	—
C2 - C6	—	—	—	Not Occupied	—	—
C7	0.5	RD / WH	2040	Battery Positive Voltage	I	—
C8	3	BN / YE	2996	Fuel Heater Control 1	II	—
D1	—	—	—	Not Occupied	—	—
D2	6	RD / VT	1242	Battery Positive Voltage	III	—
E1 - E2	—	—	—	Not Occupied	—	—
F1	3	RD / BU	7640	Battery Positive Voltage	II	—
F2 - G2	—	—	—	Not Occupied	—	—
G3	0.75	YE	1618	Left Rear Trailer Stop/Turn Lamp Control	IV	—
G4	2	RD / YE	5840	Battery Positive Voltage	IV	—
G5	2.5	RD / WH	3440	Battery Positive Voltage	IV	—
G6	2.5	RD / YE	1142	Battery Positive Voltage	IV	—
H1 - H2	—	—	—	Not Occupied	—	—
H3	0.75	GN	1619	Right Rear Trailer Stop/Turn Lamp Control	IV	—
H4	3	RD / VT	5640	Battery Positive Voltage	IV	—
H5	2.5	RD / VT	1940	Battery Positive Voltage	IV	—
H6	4	OG	742	Battery Positive Voltage	IV	—

X50A Engine Wiring Harness Junction Block X5 (L84 / L87)

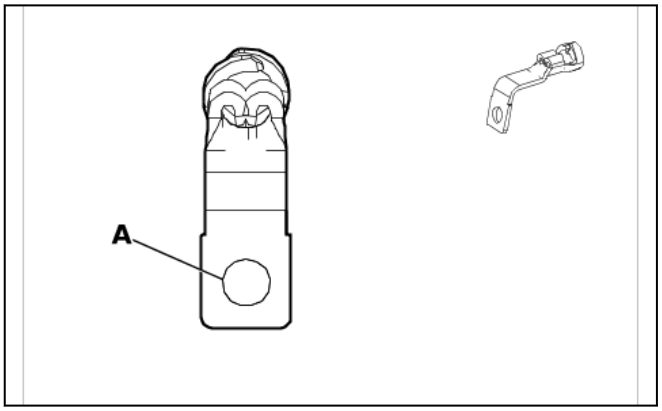

5525767

Connector Part Information

- Harness Type: Starter Solenoid Cable
- OEM Connector: 84386513
- Service Connector: Service by Cable Assembly — See Part Catalog
- Description: 1-Way Ring Terminal

Terminal Part Information

Terminal Type ID	Terminated Lead	Diagnostic Test Probe	Terminal Removal Tool
I	Not required	No Tool Required	No Tool Required

X50A Engine Wiring Harness Junction Block X5 (L84 / L87)

Pin	Size	Color	Circuit	Function	Terminal Type ID	Option
A	35	RD / GN	242	Battery Positive Voltage	I	L84/ L87

X50A Engine Wiring Harness Junction Block X5 (LZ0)

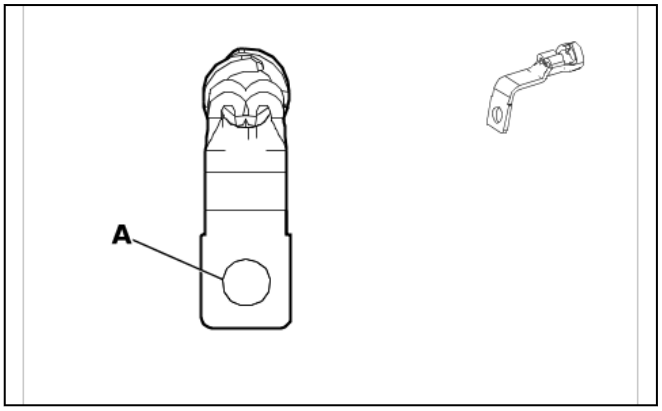

5525767

Connector Part Information

- Harness Type: Generator Battery Jumper Cable
- OEM Connector: 84386513
- Service Connector: Service by Cable Assembly — See Part Catalog
- Description: 1-Way Ring Terminal

Terminal Part Information

Terminal Type ID	Terminated Lead	Diagnostic Test Probe	Terminal Removal Tool
I	Not required	No Tool Required	No Tool Required

X50A Engine Wiring Harness Junction Block X5 (LZ0)

Pin	Size	Color	Circuit	Function	Terminal Type ID	Option
A	35	RD / GN	242	Battery Positive Voltage	I	LZ0

X50B Battery Distribution Engine Compartment Fuse Block Top View

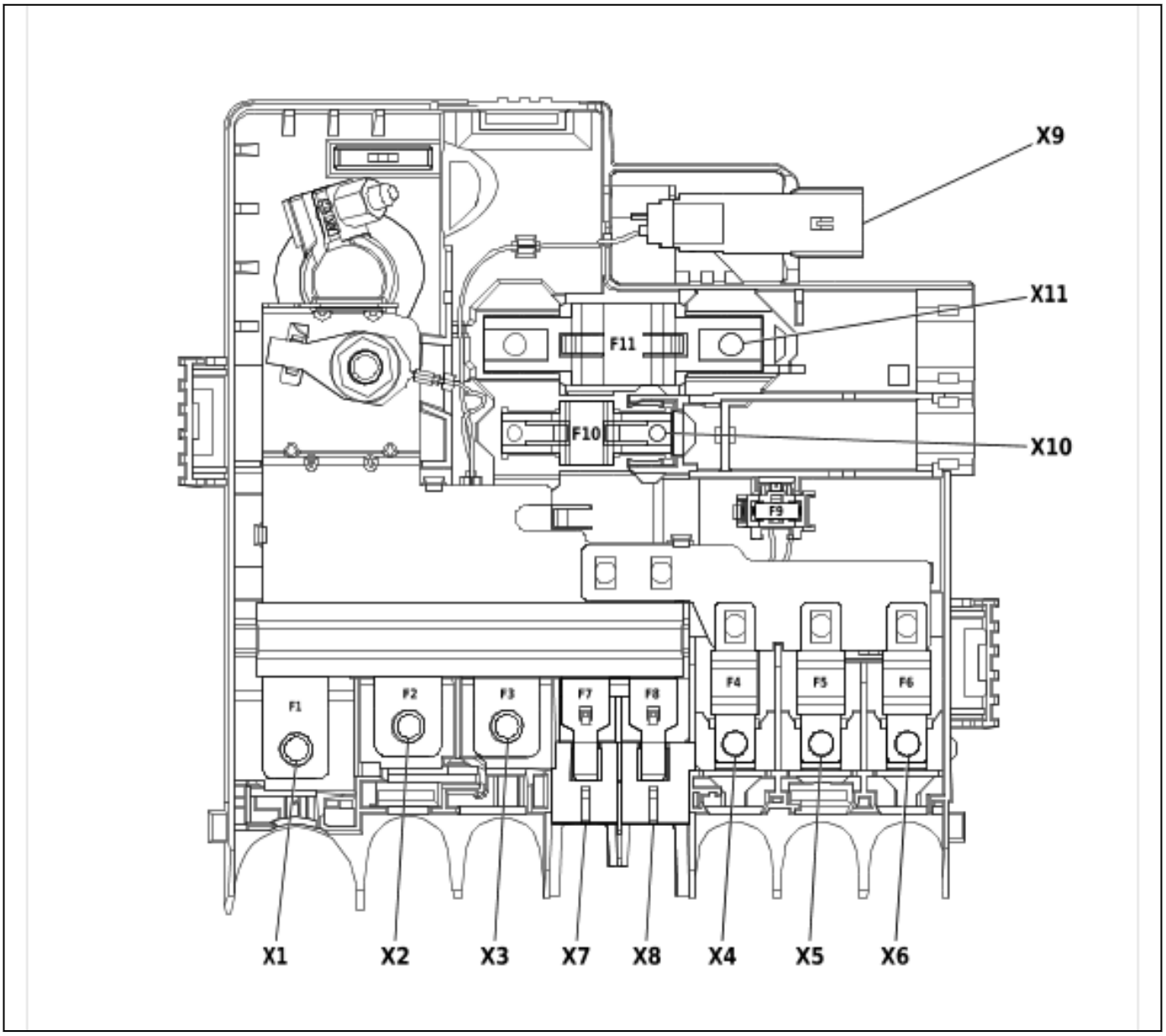

5070128

Usage Table

No.	Device Label Name	Device Assigned Name	Rating	Description
Fuses				
F1	—	F1BA	250A	• G13 Generator • X50A Engine Wiring Harness Junction Block
F2	—	F2BA	175A	• K43 Power Steering Control Module
F3	—	F3BA	450A	• M64 Starter Motor
F4	—	F4BA	150A	• E40 Air Heater (C3A)
F5	—	F5BA	70A	• K20 Engine Control Module (LZ0)
F6	—	F6BA	80A	• G10R Cooling Fan Motor - Right (LZ0)

No.	Device Label Name	Device Assigned Name	Rating	Description
F7	—	F7BA	60A	• X51R Instrument Panel Wiring Harness Junction Block - Right
F8	—	F8BA	60A	• K160 Brake System Control Module
F9	—	F9BA	5A	• B110 Battery Sensor Module

X50B Battery Distribution Engine Compartment Fuse Block X1 (L84 / L87)

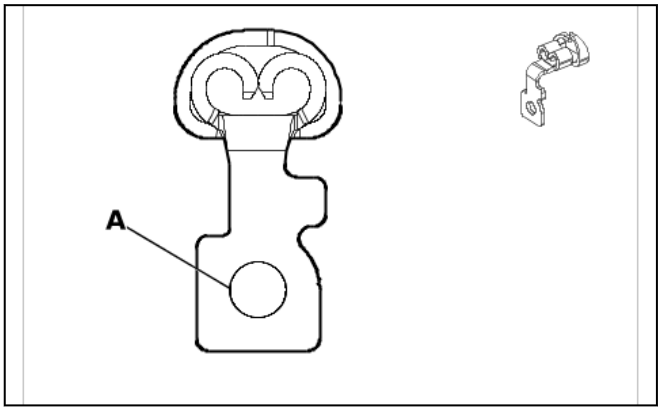

5911326

Connector Part Information
- Harness Type: Starter Solenoid Cable
- OEM Connector: 84386516
- Service Connector: Service by Cable Assembly — See Part Catalog
- Description: 1-Way Ring Terminal

Terminal Part Information

Terminal Type ID	Terminated Lead	Diagnostic Test Probe	Terminal Removal Tool
I	Not required	No Tool Required	No Tool Required

X50B Battery Distribution Engine Compartment Fuse Block X1 (L84 / L87)

Pin	Size	Color	Circuit	Function	Terminal Type ID	Option
A	35	RD / GN	242	Battery Positive Voltage	I	L84/ L87

X50B Battery Distribution Engine Compartment Fuse Block X1 (LZ0)

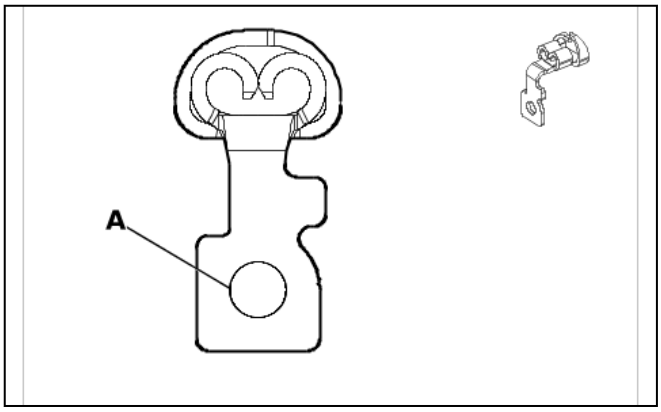

5911326

Connector Part Information
- Harness Type: Generator Battery Jumper Cable
- OEM Connector: 84386516
- Service Connector: Service by Cable Assembly — See Part Catalog
- Description: 1-Way Ring Terminal

Terminal Part Information

Terminal Type ID	Terminated Lead	Diagnostic Test Probe	Terminal Removal Tool
I	Not required	No Tool Required	No Tool Required

X50B Battery Distribution Engine Compartment Fuse Block X1 (LZ0)

Pin	Size	Color	Circuit	Function	Terminal Type ID	Option
A	35	RD / GN	242	Battery Positive Voltage	I	LZ0

X50B Battery Distribution Engine Compartment Fuse Block X2

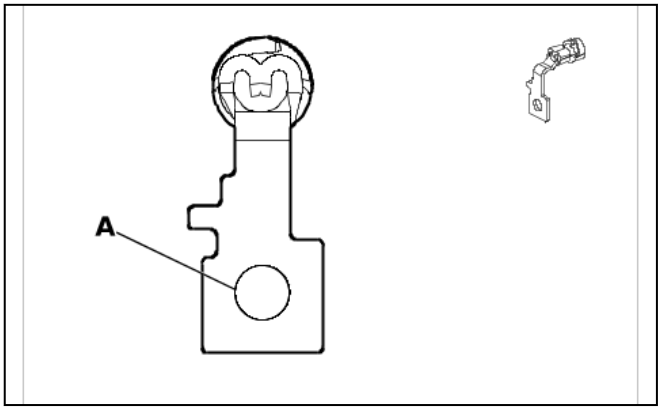

5664311

Connector Part Information
- Harness Type: Power Steering Wiring Harness
- OEM Connector: 84386514
- Service Connector: Service by Cable Assembly — See Part Catalog
- Description: 1-Way Ring Terminal

Terminal Part Information

Terminal Type ID	Terminated Lead	Diagnostic Test Probe	Terminal Removal Tool
I	Not required	No Tool Required	No Tool Required

X50B Battery Distribution Engine Compartment Fuse Block X2

Pin	Size	Color	Circuit	Function	Terminal Type ID	Option
A	25	RD / VT	842	Battery Positive Voltage	I	—

X50B Battery Distribution Engine Compartment Fuse Block X3

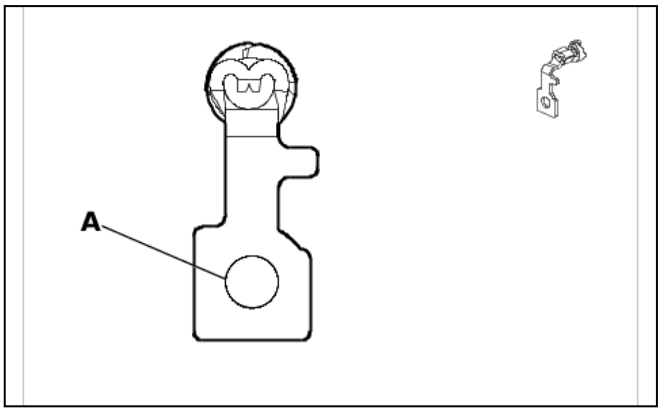

5881244

Connector Part Information

- Harness Type: Starter Solenoid Cable
- OEM Connector: 84386515
- Service Connector: Service by Cable Assembly — See Part Catalog
- Description: 1-Way Ring Terminal

Terminal Part Information

Terminal Type ID	Terminated Lead	Diagnostic Test Probe	Terminal Removal Tool
I	Not required	No Tool Required	No Tool Required

X50B Battery Distribution Engine Compartment Fuse Block X3

Pin	Size	Color	Circuit	Function	Terminal Type ID	Option
A	35	RD / YE	2	Battery Positive Voltage	I	L84/ L87
	35	RD / YE	2	Battery Positive Voltage	I	LZ0

X50B Battery Distribution Engine Compartment Fuse Block X4

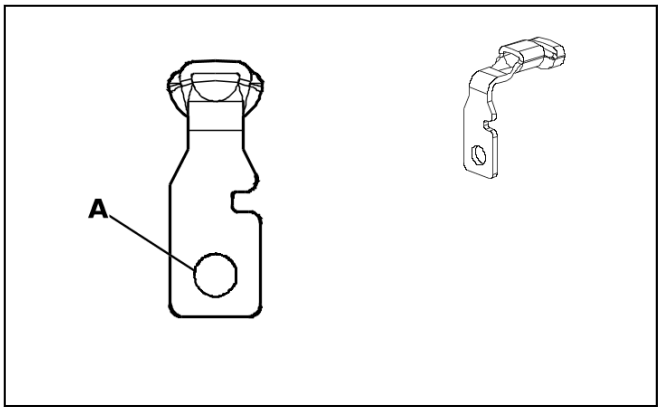

5194789

Connector Part Information
- Harness Type: Body Wiring Harness
- OEM Connector: 35085117
- Service Connector: Service by Cable Assembly — See Part Catalog
- Description: 1-Way Ring Terminal

Terminal Part Information

Terminal Type ID	Terminated Lead	Diagnostic Test Probe	Terminal Removal Tool
I	Not required	No Tool Required	No Tool Required

X50B Battery Distribution Engine Compartment Fuse Block X4

Pin	Size	Color	Circuit	Function	Terminal Type ID	Option
A	16	RD / GY	642	Battery Positive Voltage	I	—

X50B Battery Distribution Engine Compartment Fuse Block X5

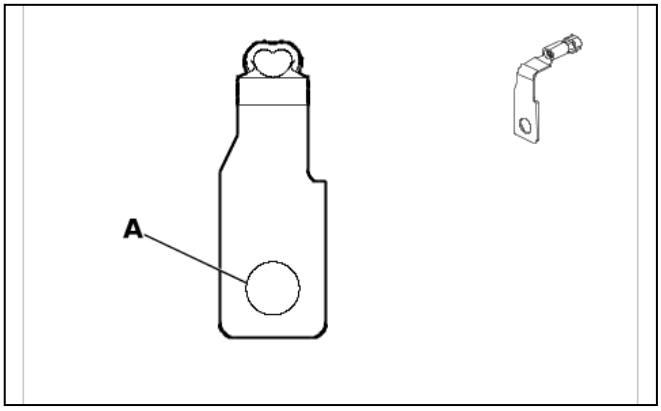

5373306

Connector Part Information
- Harness Type: Engine Wiring Harness
- OEM Connector: 84472882
- Service Connector: Service by Cable Assembly — See Part Catalog
- Description: 1-Way Ring Terminal

Terminal Part Information

Terminal Type ID	Terminated Lead	Diagnostic Test Probe	Terminal Removal Tool
I	Not required	No Tool Required	No Tool Required

X50B Battery Distribution Engine Compartment Fuse Block X5

Pin	Size	Color	Circuit	Function	Terminal Type ID	Option
A	6	BN / BU	104	Glow Plug Control	I	—

X50B Battery Distribution Engine Compartment Fuse Block X6

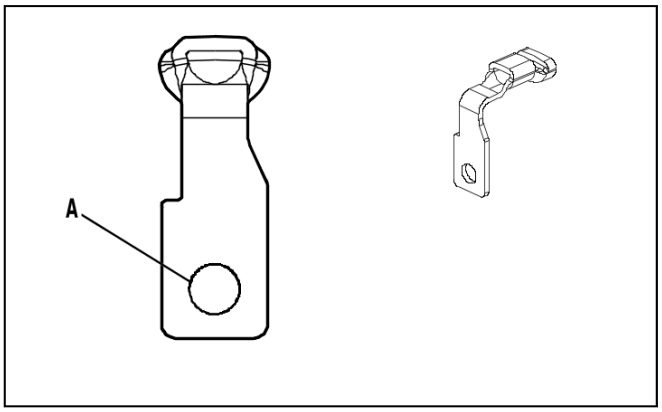

4994507

Connector Part Information

- Harness Type: Engine Wiring Harness
- OEM Connector: 35085183
- Service Connector: Service by Cable Assembly — See Part Catalog
- Description: 1-Way Ring Terminal

Terminal Part Information

Terminal Type ID	Terminated Lead	Diagnostic Test Probe	Terminal Removal Tool
I	Not required	No Tool Required	No Tool Required

X50B Battery Distribution Engine Compartment Fuse Block X6

Pin	Size	Color	Circuit	Function	Terminal Type ID	Option
A	10	RD / YE	1442	Battery Positive Voltage	I	—

X50B Battery Distribution Engine Compartment Fuse Block X7

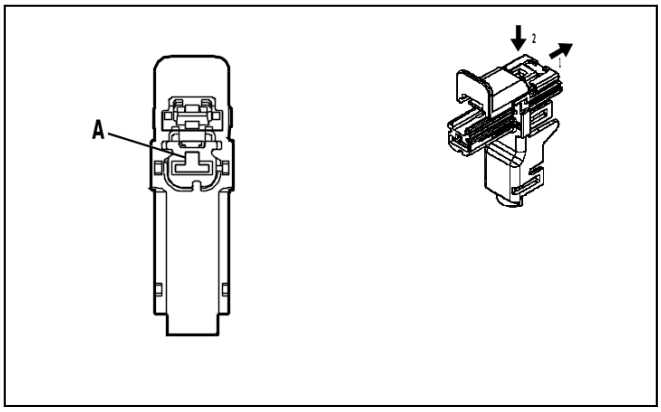

4994183

Connector Part Information
- Harness Type: Body Wiring Harness
- OEM Connector: 33297578
- Service Connector: Service by Harness - See Part Catalog
- Description: 1-Way F 6.3 Series(BK)

Terminal Part Information

Terminal Type ID	Terminated Lead	Diagnostic Test Probe	Terminal Removal Tool
I	Not required	J-35616-42 (RD)	No Tool Required

X50B Battery Distribution Engine Compartment Fuse Block X7

Pin	Size	Color	Circuit	Function	Terminal Type ID	Option
A	5	RD / YE	1442	Battery Positive Voltage	I	—

X50B Battery Distribution Engine Compartment Fuse Block X8

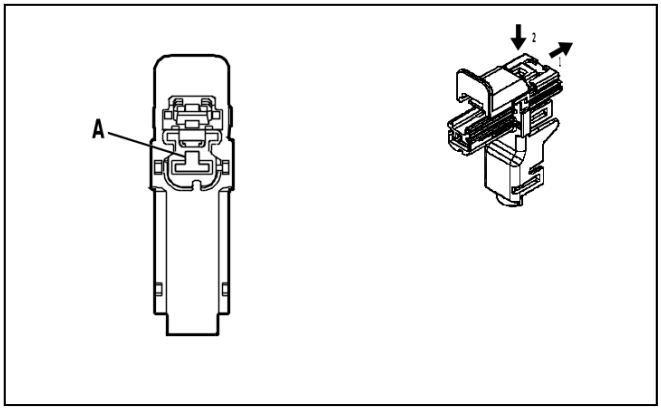

4994171

Connector Part Information
- Harness Type: Body Wiring Harness
- OEM Connector: 33297579
- Service Connector: Service by Harness - See Part Catalog
- Description: 1-Way F 6.3 Series(BU)

Terminal Part Information

Terminal Type ID	Terminated Lead	Diagnostic Test Probe	Terminal Removal Tool
I	Not required	J-35616-42 (RD)	No Tool Required

X50B Battery Distribution Engine Compartment Fuse Block X8

Pin	Size	Color	Circuit	Function	Terminal Type ID	Option
A	6	RD / WH	1642	Battery Positive Voltage	I	—

X50B Battery Distribution Engine Compartment Fuse Block X9

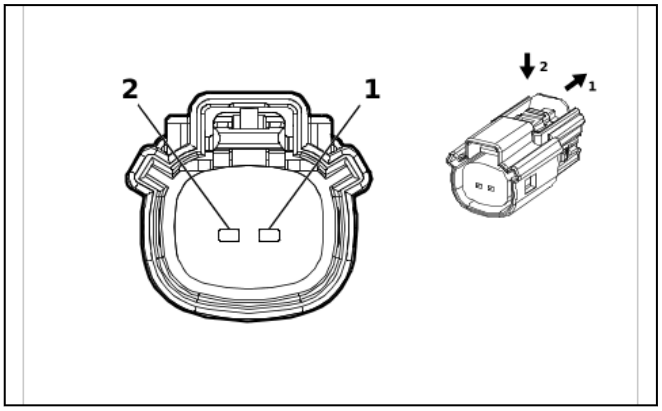

2474713

Connector Part Information

- Harness Type: Body Wiring Harness
- OEM Connector: 33471-0206
- Service Connector: 13577534
- Description: 2-Way F 1.5 Series, Sealed(BK)

Terminal Part Information

Terminal Type ID	Terminated Lead	Diagnostic Test Probe	Terminal Removal Tool
I	Not required	J-35616-2A (GY)	No Tool Required

X50B Battery Distribution Engine Compartment Fuse Block X9

Pin	Size	Color	Circuit	Function	Terminal Type ID	Option
(1) 1	(1) 0.75	(1) RD / YE	(1) 2340	(1) Battery Positive Voltage	(1) I	(1) —
2	—	—	—	Not Occupied	—	—

X50EA Battery Distribution Fuse Block - Auxiliary Top View (5W4/9C1)

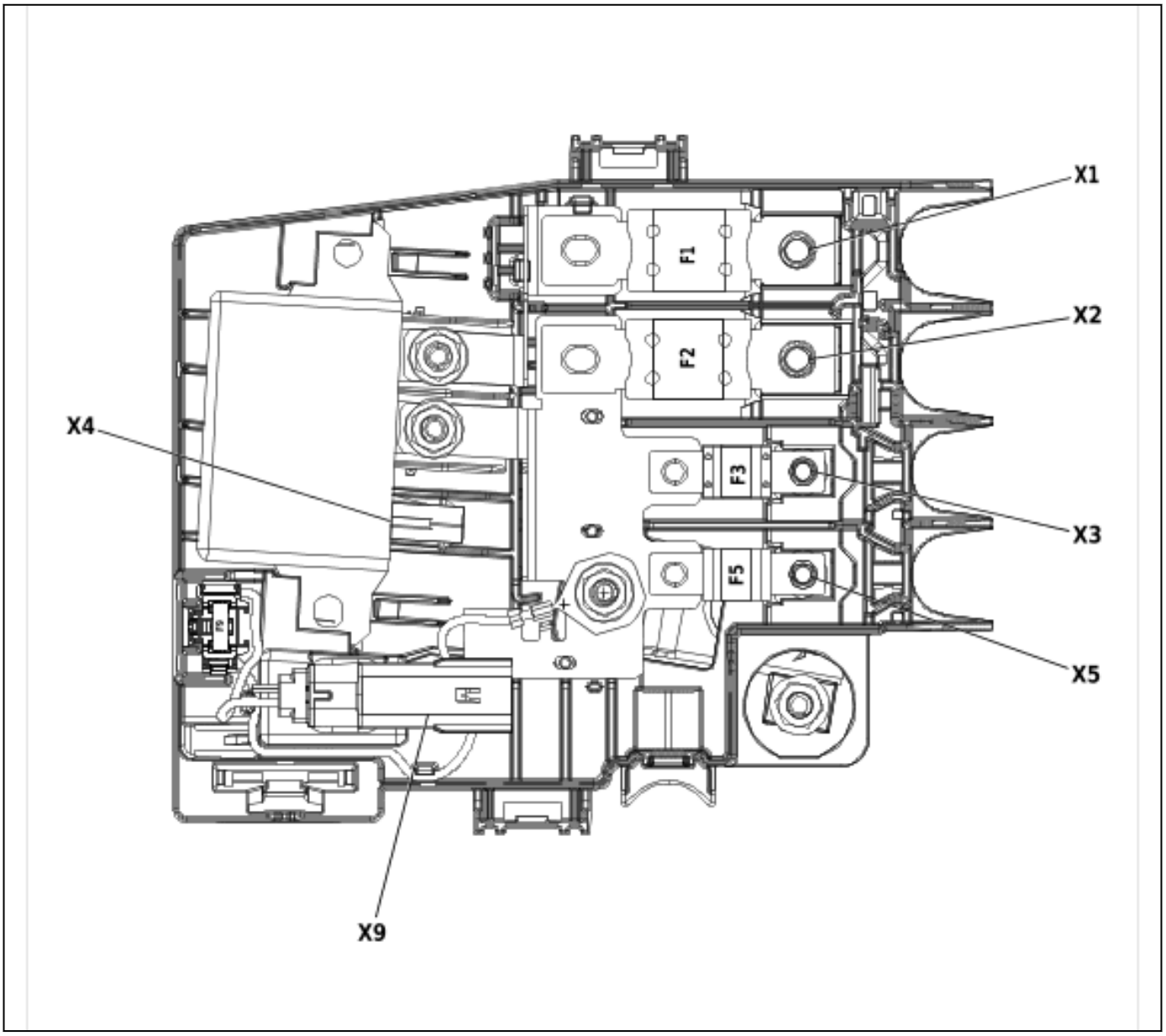

6665306

Usage Table

No.	Device Label Name	Device Assigned Name	Rating	Description
Fuses				
F1	—	F1BB	100A	• KR81 Auxiliary Battery Relay
F2	—	F2BB	100A	• W12RCL Blunt Cut - Left Rear Cargo Trim
F3	—	F3BB	50A	• W12RCL Blunt Cut - Left Rear Cargo Trim
F5	—	F5BB	60A	• X51AX Instrument Panel Wiring Harness Junction Block - Auxiliary
F9	—	F9BB	5A	• B110AX Battery Monitor Module - Auxiliary

No.	Device Label Name	Device Assigned Name	Rating	Description
Relays				
—	—	KR81 Auxiliary Battery Relay	—	• C1B Battery - Auxiliary • F2BB • F3BB • F5BB • F9BB

X50EA Battery Distribution Fuse Block - Auxiliary X1 (5W4 / 9C1)

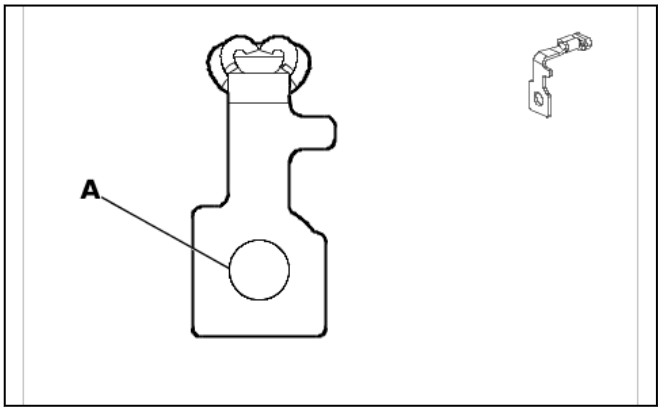

5873864

Connector Part Information
- Harness Type: Body Wiring Harness
- OEM Connector: 1130801
- Service Connector: Service by Cable Assembly — See Part Catalog
- Description: 1-Way Ring Terminal

Terminal Part Information

Terminal Type ID	Terminated Lead	Diagnostic Test Probe	Terminal Removal Tool
I	Not required	No Tool Required	No Tool Required

X50EA Battery Distribution Fuse Block - Auxiliary X1 (5W4 / 9C1)

Pin	Size	Color	Circuit	Function	Terminal Type ID	Option
A	16	RD / GY	642	Battery Positive Voltage	I	—

X50EA Battery Distribution Fuse Block - Auxiliary X2 (5W4 / 9C1)

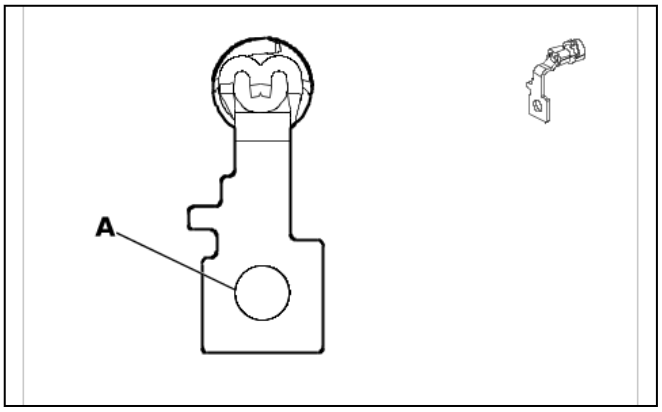

5664311

Connector Part Information
- Harness Type: Body Wiring Harness
- OEM Connector: 1122403
- Service Connector: Service by Cable Assembly — See Part Catalog
- Description: 1-Way Ring Terminal

Terminal Part Information

Terminal Type ID	Terminated Lead	Diagnostic Test Probe	Terminal Removal Tool
I	Not required	No Tool Required	No Tool Required

X50EA Battery Distribution Fuse Block - Auxiliary X2 (5W4 / 9C1)

Pin	Size	Color	Circuit	Function	Terminal Type ID	Option
A	25	RD / VT	842	Battery Positive Voltage	I	—

X50EA Battery Distribution Fuse Block - Auxiliary X3 (5W4 / 9C1)

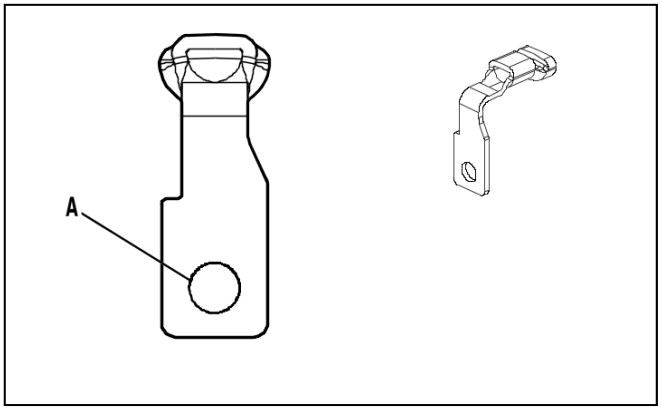

4994507

Connector Part Information
- Harness Type: Body Wiring Harness
- OEM Connector: 35085183
- Service Connector: Service by Cable Assembly — See Part Catalog
- Description: 1-Way Ring Terminal

Terminal Part Information

Terminal Type ID	Terminated Lead	Diagnostic Test Probe	Terminal Removal Tool
I	Not required	No Tool Required	No Tool Required

X50EA Battery Distribution Fuse Block - Auxiliary X3 (5W4 / 9C1)

Pin	Size	Color	Circuit	Function	Terminal Type ID	Option
A	10	RD / GN	742	Battery Positive Voltage	I	—

X50EA Battery Distribution Fuse Block - Auxiliary X4 (5W4 / 9C1)

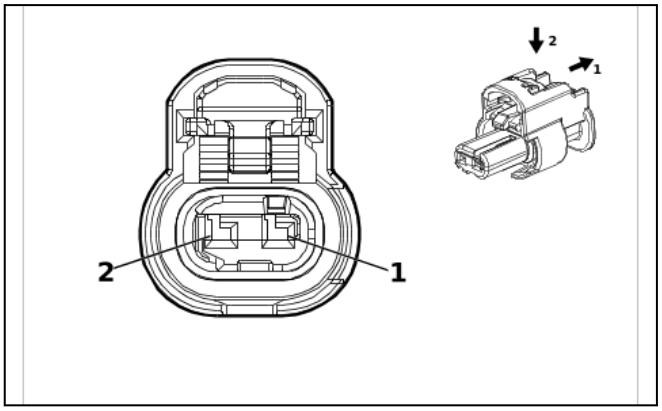

4649903

Connector Part Information

- Harness Type: Body Wiring Harness
- OEM Connector: 1-2296694-1
- Service Connector: 85761014
- Description: 2-Way F 1.2 MCON Series, Sealed(BK)

Terminal Part Information

Terminal Type ID	Terminated Lead	Diagnostic Test Probe	Terminal Removal Tool
I	Not required	J-35616-12 (BU)	No Tool Required
II	Not required	J-35616-16 (L-GN)	No Tool Required

X50EA Battery Distribution Fuse Block - Auxiliary X4 (5W4 / 9C1)

Pin	Size	Color	Circuit	Function	Terminal Type ID	Option
(1) 1	(1) 0.5	(1) BN / BU	(1) 4892	(1) Auxiliary Battery Relay Control	(1) I	(1) —
(2) 2	(2) 1	(2) BK	(2) 7650	(2) Police Ground	(2) II	(2) —

X50EA Battery Distribution Fuse Block - Auxiliary X5 (5W4 / 9C1)

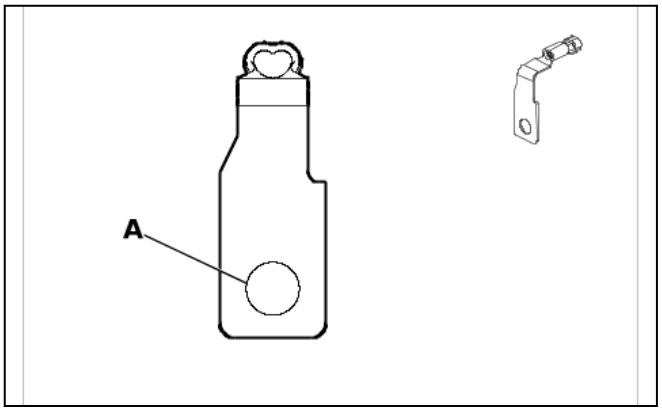

5373306

Connector Part Information
- Harness Type: Body Wiring Harness
- OEM Connector: 84472882
- Service Connector: Service by Cable Assembly — See Part Catalog
- Description: 1-Way Ring Terminal

Terminal Part Information

Terminal Type ID	Terminated Lead	Diagnostic Test Probe	Terminal Removal Tool
I	Not required	No Tool Required	No Tool Required

X50EA Battery Distribution Fuse Block - Auxiliary X5 (5W4 / 9C1)

Pin	Size	Color	Circuit	Function	Terminal Type ID	Option
A	6	RD / GY	2742	Battery Positive Voltage	I	—

X50EA Battery Distribution Fuse Block - Auxiliary X9 (5W4 / 9C1)

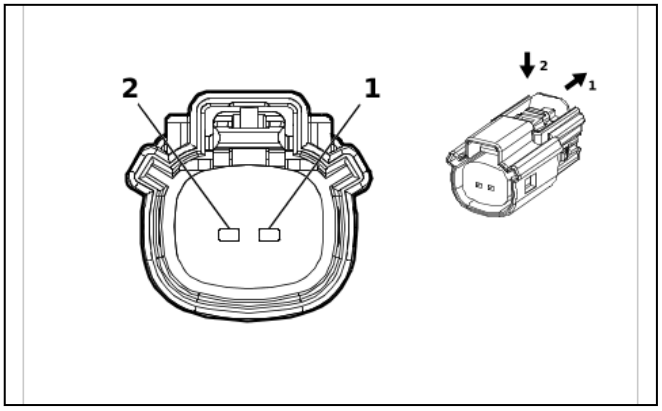

2474713

Connector Part Information
- Harness Type: Body Wiring Harness
- OEM Connector: 33471-0206
- Service Connector: 13577534
- Description: 2-Way F 1.5 Series, Sealed(BK)

Terminal Part Information

Terminal Type ID	Terminated Lead	Diagnostic Test Probe	Terminal Removal Tool
I	Not required	J-35616-2A (GY)	No Tool Required

X50EA Battery Distribution Fuse Block - Auxiliary X9 (5W4 / 9C1)

Pin	Size	Color	Circuit	Function	Terminal Type ID	Option
(1) 1	(1) 0.75	(1) RD / YE	(1) 2340	(1) Battery Positive Voltage	(1) I	(1) —
2	—	—	—	Not Occupied	—	—

X51AX Instrument Panel Wiring Harness Junction Block - Auxiliary Label (5W4/9C1)

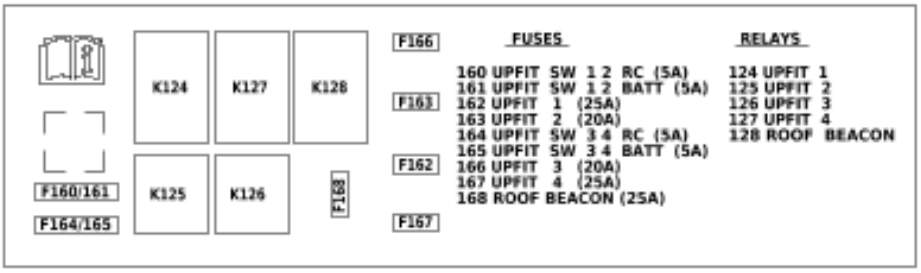

5573254

X51AX Instrument Panel Wiring Harness Junction Block - Auxiliary Top View (5W4/9C1)

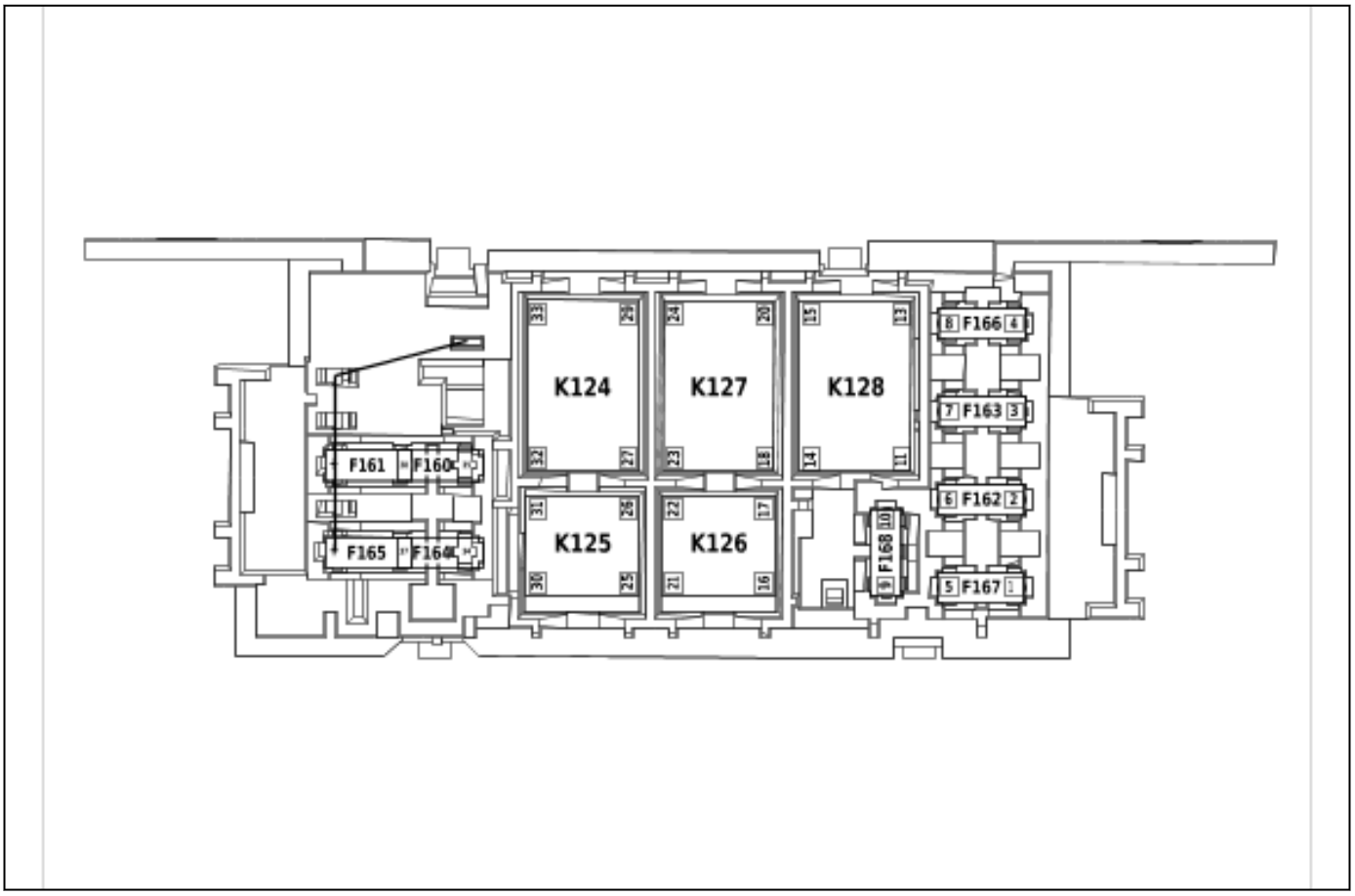

5245414

Usage Table

No.	Device Label Name	Device Assigned Name	Rating	Description
Fuses				
F160	UPFIT SW 1-2 RC	F160DA	5A	• KR161A Configurable Provision Relay 1 • KR161B Configurable Provision Relay 2
F161	UPFIT SW 1-2 BATT	F161DA	5A	• Not Used
F162	UPFIT1	F162DA	25A	• W12FC Blunt Cut - Front Seat/Center Console
F163	UPFIT2	F163DA	20A	• W12FC Blunt Cut - Front Seat/Center Console
F164	UPFIT SW 3-4 RC	F164DA	5A	• KR161C Configurable Provision Relay 3 • KR161D Configurable Provision Relay 4
F165	UPFIT SW 3-4 BATT	F165DA	5A	• Not Used
F166	UPFIT3	F166DA	20A	• W12RCL Blunt Cut - Left Rear Cargo Trim
F167	UPFIT4	F167DA	25A	• W12RCL Blunt Cut - Left Rear Cargo Trim
Relays				
K124	UPFIT1	KR161A Configurable Provision Relay 1	—	• F162DA

No.	Device Label Name	Device Assigned Name	Rating	Description
K125	UPFIT2	KR161B Configurable Provision Relay 2	—	• F163DA
K126	UPFIT3	KR161C Configurable Provision Relay 3	—	• F166DA
K127	UPFIT4	KR161D Configurable Provision Relay 4	—	• F167DA
K128	ROOF BEACON	—	—	• Not Used

X51AX Instrument Panel Wiring Harness Junction Block - Auxiliary - Wire Entry (5W4 / 9C1)

—

Connector Part Information

- Harness Type: Instrument Panel Wiring Harness
- OEM Connector: 33323307
- Service Connector: Service by Component Assembly - See Part Catalog
- Description: Wire Entry Fuse Block

Terminal Part Information

Terminal Type ID	Terminated Lead	Diagnostic Test Probe	Terminal Removal Tool
I	19332366	J-35616-35 (VT)	J-38125-212
II	84764079	J-35616-44 (YE)	J-38125-11A

X51AX Instrument Panel Wiring Harness Junction Block - Auxiliary - Wire Entry (5W4 / 9C1)

Pin	Size	Color	Circuit	Function	Terminal Type ID	Option
(1) 1	(1) 1	(1) RD / YE	(1) 8914	(1) Police Select Control 4	(1) I	(1) —
(2) 2	(2) 1	(2) RD / GN	(2) 8911	(2) Police Select Control 1	(2) I	(2) —
(3) 3	(3) 0.75	(3) RD / GY	(3) 8912	(3) Police Select Control 2	(3) I	(3) —
(4) 4	(4) 0.75	(4) RD / WH	(4) 8913	(4) Police Select Control 3	(4) I	(4) —
(5) 5	(5) 1	(5) RD / BU	(5) 8908	(5) Police Select Fuse Supply Voltage 4	(5) I	(5) —
(6) 6	(6) 1	(6) RD / BN	(6) 8905	(6) Police Select Fuse Supply Voltage 1	(6) I	(6) —
(7) 7	(7) 1	(7) RD / BN	(7) 8906	(7) Police Select Fuse Supply Voltage 2	(7) I	(7) —
(8) 8	(8) 1	(8) RD / BU	(8) 8907	(8) Police Select Fuse Supply Voltage 3	(8) I	(8) —
(16) 16	(16) 0.75	(16) RD / GY	(16) 2742	(16) Battery Positive Voltage	(16) I	(16) —
(17) 17	(17) 0.75	(17) GY / YE	(17) 8897	(17) Police Relay 3 Control	(17) I	(17) —
(18) 18	(18) 1	(18) RD / BU	(18) 8908	(18) Police Select Fuse Supply Voltage 4	(18) I	(18) —

Pin	Size	Color	Circuit	Function	Terminal Type ID	Option
(20) 20	(20) 0.5	(20) RD / VT	(20) 8910	(20) Police Select Relay Supply Voltage 2	(20) I	(20) —
(21) 21	(21) 0.5	(21) RD / VT	(21) 8910	(21) Police Select Relay Supply Voltage 2	(21) I	(21) —
(22) 22	(22) 1	(22) RD / BU	(22) 8907	(22) Police Select Fuse Supply Voltage 3	(22) I	(22) —
(23) 23	(23) 0.75	(23) VT / YE	(23) 8898	(23) Police Relay 4 Control	(23) I	(23) —
(24) 24	(24) 0.75	(24) RD / GY	(24) 2742	(24) Battery Positive Voltage	(24) I	(24) —
(25) 25	(25) 1	(25) RD / GY	(25) 2742	(25) Battery Positive Voltage	(25) I	(25) —
(26) 26	(26) 0.75	(26) GN / YE	(26) 8896	(26) Police Relay 2 Control	(26) I	(26) —
(27) 27	(27) 1	(27) RD / BN	(27) 8905	(27) Police Select Fuse Supply Voltage 1	(27) I	(27) —
(29) 29	(29) 0.5	(29) RD / VT	(29) 8909	(29) Police Select Relay Supply Voltage 1	(29) I	(29) —
(30) 30	(30) 0.5	(30) RD / VT	(30) 8909	(30) Police Select Relay Supply Voltage 1	(30) I	(30) —
(31) 31	(31) 1	(31) RD / BN	(31) 8906	(31) Police Select Fuse Supply Voltage 2	(31) I	(31) —
(32) 32	(32) 0.75	(32) BU / YE	(32) 8895	(32) Police Relay 1 Control	(32) I	(32) —
(33) 33	(33) 1	(33) RD / GY	(33) 2742	(33) Battery Positive Voltage	(33) I	(33) —
(34) 34	(34) 0.5	(34) VT / WH	(34) 239	(34) Run/Crank Ignition 1 Voltage	(34) I	(34) —
(35) 35	(35) 0.5	(35) VT / WH	(35) 239	(35) Run/Crank Ignition 1 Voltage	(35) I	(35) —
(36) 36	(36) 5	(36) RD / GY	(36) 2742	(36) Battery Positive Voltage	(36) II	(36) —
(37) 37	(37) 0.5	(37) RD / VT	(37) 8910	(37) Police Select Relay Supply Voltage 2	(37) I	(37) —
(38) 38	(38) 0.5	(38) RD / VT	(38) 8909	(38) Police Select Relay Supply Voltage 1	(38) I	(38) —
(39) 39	(39) 1	(39) RD / GY	(39) 2742	(39) Battery Positive Voltage	(39) I	(39) —
(40) 40	(40) 0.75	(40) RD / GY	(40) 2742	(40) Battery Positive Voltage	(40) I	(40) —
(42) 42	(42) 0.75	(42) RD / GY	(42) 2742	(42) Battery Positive Voltage	(42) I	(42) —
(43) 43	(43) 1	(43) RD / GY	(43) 2742	(43) Battery Positive Voltage	(43) I	(43) —

X51R Instrument Panel Wiring Harness Junction Block - Right Label

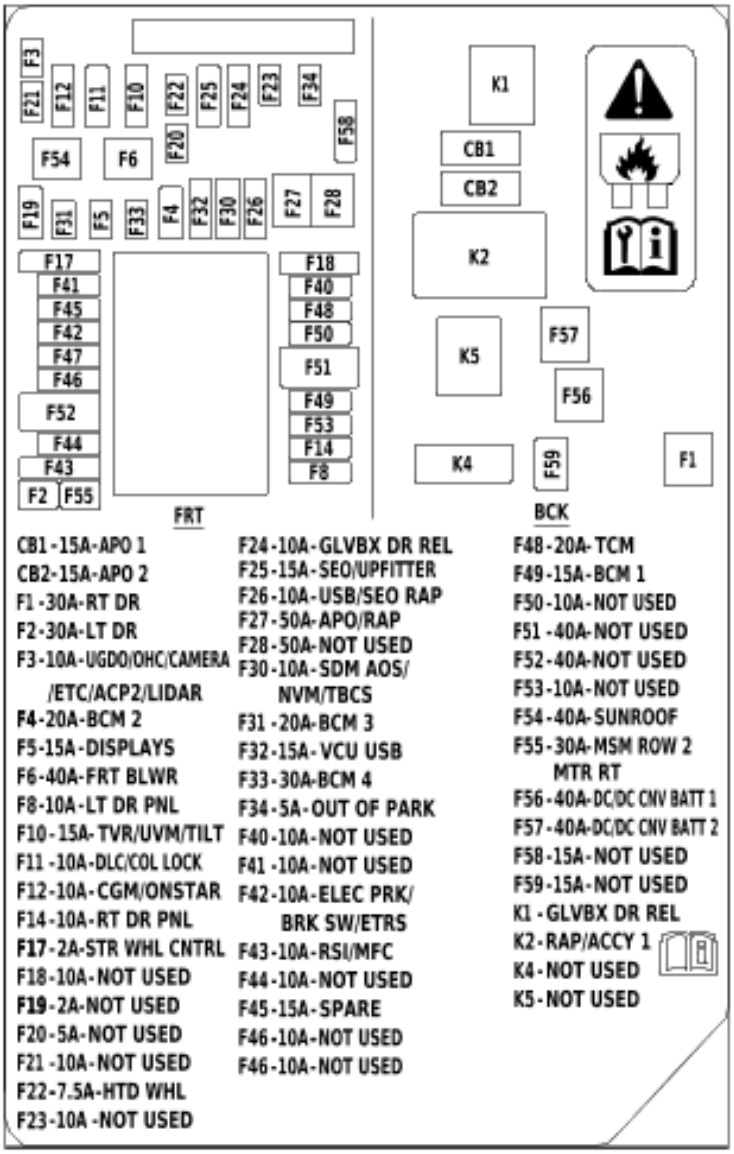

6665307

X51R Instrument Panel Wiring Harness Junction Block - Right Top View

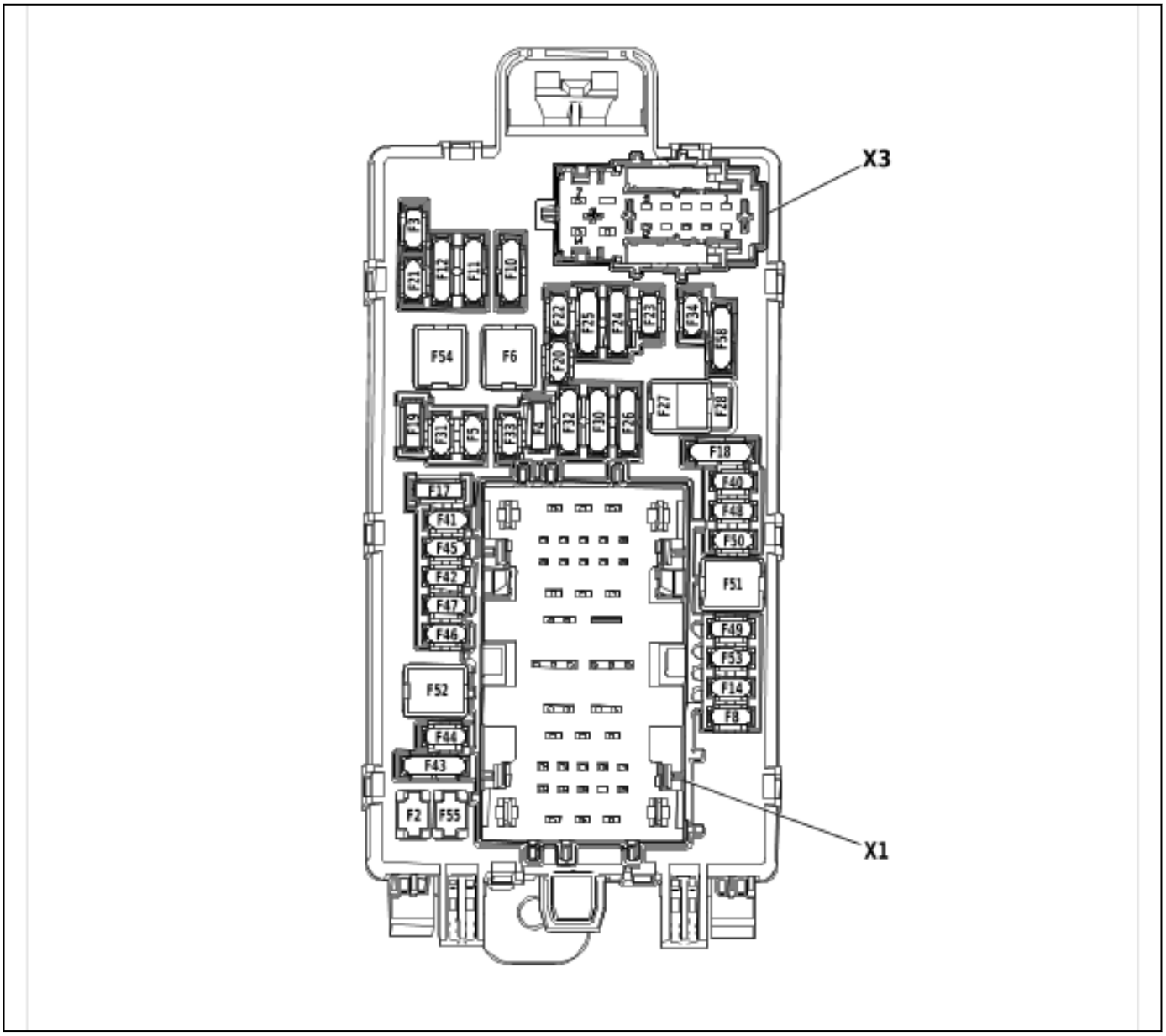

5041376

Usage Table

No.	Device Label Name	Device Assigned Name	Rating	Description
Fuses				
F2	LT DR	F2DR	30A	• M74D Front Side Door Window Regulator Motor - Driver • S79LR Rear Side Door Window Switch - Left
F3	UGDO/OHC/ CAMERA/ETC/ ACP2/LIDAR	F3DR	10A	• A103 Roof Console • B117A Windshield Outside Moisture/Ambient Light and Humidity Sensor • B174W Front View Camera - Windhsield • E104 Emergency Vehicle Reading Lamp (5W4/9C1)
F4	BCM 2	F4DR	20A	• K9 Body Control Module

No.	Device Label Name	Device Assigned Name	Rating	Description
F5	DISPLAYS	F5DR	15A	• A22 Radio Control • P16 Instrument Panel Cluster Control Module • P29 Head-up Display (UV6)
F6	FRT BLWR	F6DR	40A	• M8 Blower Motor
F8	LT DR PNL	F8DR	10A	• A24D Front Side Door Outside Handle - Left (BOR/BOY) • S79D Front Side Door Window Control Switch - Driver (-BOR/BOY)
F10	TVR/UVM/TILT	F10DR	15A	• K56U Special Purpose Vehicle Control Module (KGU) • K99 Steering Column Tilt Wheel and Telescope Control Module (N38) • X20 Card Reader Receptacle
F11	DLC/COL LOCK	F11DR	10A	• K60 Column Lock Module • X84 Data Link Connector
F12	CGM/ONSTAR	F12DR	10A	• K56 Serial Data Gateway Module • K73 Telematic Control Module
F14	RT DOOR PNL	F14DR	10A	• S79P Front Side Door Window Switch - Passenger
F17	STR WHL CNTRL	F17DR	2A	• K180S Driver Monitoring System Module - Steering Wheel (UKL) • S70R Radio Control Switch - Steering Wheel
F18	NOT USED	F18DR	10A	• Not Used
F19	NOT USED	F19DR	2A	• Not Used
F20	NOT USED	F20DR	5A	• Not Used
F21	NOT USED	F21DR	10A	• Not Used
F22	HTD WHL	F22DR	7.5A	• K32 Steering Wheel Heating Control Module (KI3-UKL) • K180S Driver Monitoring System Module - Steering Wheel (UKL)
F23	NOT USED	F23DR	10A	• Not Used
F24	GLVBX DR REL	F24DR	10A	• Not Used
F25	SEO/UPFITTER	F25DR	15A	• E35L Spot Lamp - Left (5W4/9C1) • E35R Spot Lamp - Right (5W4/9C1)
F26	USB/SEO RAP	F26DR	10A	• W12FC Blunt Cut - Front Seat/Center Console (5W4/9C1) • W12RCL Blunt Cut - Left Rear Cargo Trim (5W4/9C1) • X92BCL USB Receptacle - 3rd Row Seat Left • X92BCR USB Receptacle - 3rd Row Seat Right • X92CD Dual Charge Only Receptacle - Floor Console Rear
F27	APO/RAP	F27DR	50A	• CB1DR • CB2DR
F28	NOT USED	F28DR	50A	• Not Used
F30	SDM AOS/DMS/NVM/TBCS	F30DR	10A	• K36 Restraints Control Module • K85P Restraints Occupant Classification System Module - Passenger • S76 Trailer Brake Control Switch (JL1)

No.	Device Label Name	Device Assigned Name	Rating	Description
F31	BCM 3	F31DR	20A	• K9 Body Control Module
F32	VCU USB	F32DR	15A	• A11 Radio • X23 Multimedia Receptacle (-AZ3) • X92IP USB 2 Port Receptacle - Instrument Panel (AZ3)
F33	BCM 4	F33DR	30A	• K9 Body Control Module
F34	OUT OF PARK	F34DR	5A	• KR87 Transmission Park Position Relay
F40	NOT USED	F40DR	10A	• Not Used
F41	NOT USED	F41DR	10A	• Not Used
F42	ELEC PRK/BRK SW/ETRS	F42DR	10A	• S3B Automatic Transmission Electronic Control • S91 Parking Brake Control Switch
F43	RSI/MFC	F43DR	10A	• P22E Video Display - Left Front Seat Back (UW9) • P22F Video Display - Right Front Seat Back (UW9) • K299R Audio/Video Interface Rear Module (UW9) • X83B Audio/Video Receptacle (UW9) • X92CF USB 2 Port Receptacle - Floor Console Front (UBC)
F44	NOT USED	F44DR	10A	• Not Used
F45	SPARE	F45DR	15A	• A11 Radio (IOR)
F46	NOT USED	F46DR	10A	• Not Used
F47	NOT USED	F47DR	10A	• Not Used
F48	TCM	F48DR	20A	• K71 Transmission Control Module
F49	BCM 1	F49DR	15A	• K9 Body Control Module
F50	NOT USED	F50DR	10A	• Not Used
F51	NOT USED	F51DR	40A	• Not Used
F52	NOT USED	F52DR	40A	• Not Used
F53	NOT USED	F53DR	10A	• Not Used
F54	SUNROOF	F54DR	40A	• K61 Sunroof Control Module (C3U)
F55	MSM ROW 2 MTR RT	F55DR	30A	• Not Used
F58	NOT USED	F58DR	15A	• Not Used
Relays				
Note: Relays listed below are non-serviceable Printed Circuit Board (PCB) relays and are internal to the block.				
—	—	KR87 Transmission Park Position Relay	—	• S143L Rear Seat Back Folding Switch - 2nd Row Left (ATN/ATT) • S143R Rear Seat Back Folding Switch - 2nd Row Right (ATN/ATT) • S144A Rear Seat Back Folding Siwtch - 2nd Row Rear Compartment (ATN/ATT) • W12FC Blunt Cut - Front Seat/Center Console (5W4/9C1) • W12RCL Blunt Cut - Left Rear Cargo Trim (5W4/9C1)

X51R Instrument Panel Wiring Harness Junction Block - Right Bottom View

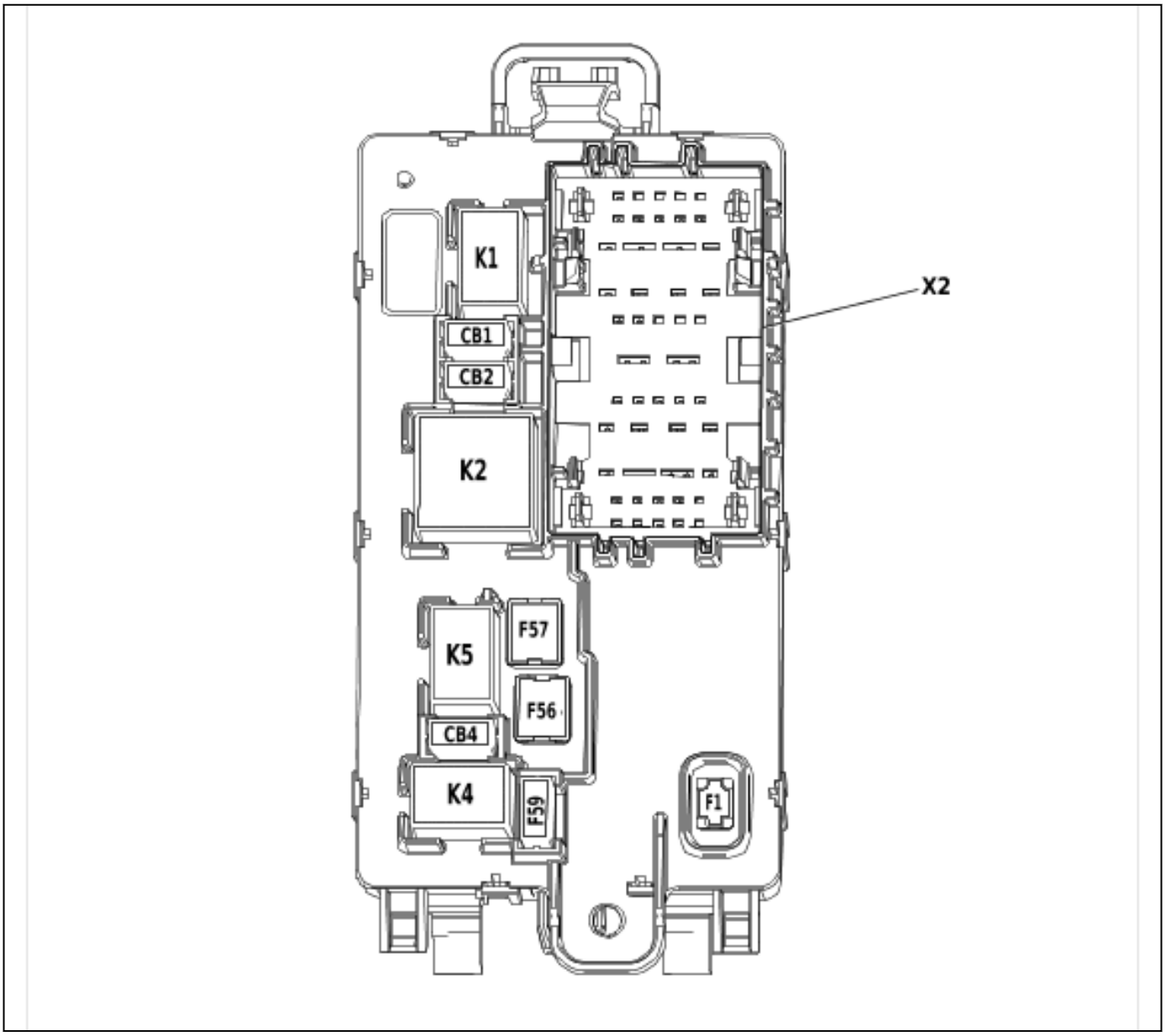

5619643

Usage Table

No.	Device Label Name	Device Assigned Name	Rating	Description
Circuit Breakers				
CB1	APO 1	CB1DR	15A	• Not Used
CB2	APO 2	CB2DR	15A	• Not Used
Fuses				
F1	RT DR	F1DR	30A	• M74P Front Side Door Window Regulator Motor - Passenger • S79RR Rear Side Door Window Switch - Right
F56	DC/DC CNV BATT 1	F56DR	40A	• T19 Multifunction Power Supply Converter

No.	Device Label Name	Device Assigned Name	Rating	Description
F57	DC/DC CNV BATT 2	F57DR	40A	• T19 Multifunction Power Supply Converter
F59	NOT USED	F59DR	15A	• Not Used
Relays				
K1	GLVBX DR REL	—	—	• Not Used
K2	RAP/ACCY 1	KR76A Accessory Time Delay Cutoff Relay 1	—	• F26DR • F27DR
K4	NOT USED	—	—	• Not Used
K5	NOT USED	—	—	• Not Used

X51R Instrument Panel Wiring Harness Junction Block - Right X1

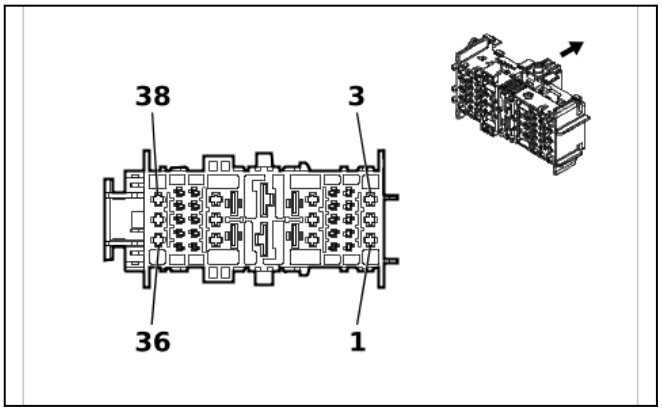

5402140

Connector Part Information
- Harness Type: Body Wiring Harness
- OEM Connector: 35729471
- Service Connector: 85092590
- Description: 38-Way F 1.5, 2.8, 6.3 MCP, 9.5 MCON-LL Series(BU)

Terminal Part Information

Terminal Type ID	Terminated Lead	Diagnostic Test Probe	Terminal Removal Tool
I	19332366	J-35616-35 (VT)	J-38125-212
II	19371175	J-35616-2A (GY)	EL-38125-560A
III	84764078	J-35616-42 (RD)	J-38125-215A
IV	84764079	J-35616-44 (YE)	J-38125-11A
V	Not required	J-35616-22 (RD)	No Tool Required

X51R Instrument Panel Wiring Harness Junction Block - Right X1

Pin	Size	Color	Circuit	Function	Terminal Type ID	Option
1 - 2	—	—	—	Not Occupied	—	—
(3) 3	(3) 0.75	(3) RD / GN	(3) 1840	(3) Battery Positive Voltage	(3) I	(3) —
4	—	—	—	Not Occupied	—	—

Pin	Size	Color	Circuit	Function	Terminal Type ID	Option
(5) 5	(5) 0.5	(5) RD / GN	(5) 4440	(5) Battery Positive Voltage	(5) II	(5) —
(6) 6	(6) 0.5	(6) VT	(6) 4701	(6) Retained Accessory Power Control	(6) II	(6) —
(7) 7	(7) 0.5	(7) VT	(7) 2801	(7) Retained Accessory Power Control	(7) II	(7) —
(8) 8	(8) 0.5	(8) VT	(8) 4701	(8) Retained Accessory Power Control	(8) II	(8) —
9	—	—	—	Not Occupied	—	—
(10) 10	(10) 0.35	(10) GY / GN	(10) 4083	(10) Retained Accessory Power Relay 2 Coil Control	(10) II	(10) —
11 - 12	—	—	—	Not Occupied	—	—
(13) 13	(13) 0.35	(13) YE / BK	(13) 5813	(13) Park Enable Control	(13) II	(13) —
14 - 16	—	—	—	Not Occupied	—	—
(17) 17	(17) 2.5	(17) RD / YE	(17) 2172	(17) 12V Regulated Supply Voltage 1	(17) III	(17) —
(18) 18	(18) 2.5	(18) RD / YE	(18) 8140	(18) Battery Positive Voltage	(18) III	(18) —
(19) 19	(19) 5	(19) RD / YE	(19) 1442	(19) Battery Positive Voltage	(19) IV	(19) —
(20) 20	(20) 10	(20) RD / WH	(20) 342	(20) Battery Positive Voltage	(20) V	(20) —
(21) 21	(21) 2.5	(21) RD / GN	(21) 2173	(21) 12V Regulated Supply Voltage 2	(21) III	(21) —
(22) 22	(22) 2.5	(22) RD / WH	(22) 8040	(22) Battery Positive Voltage	(22) III	(22) —
(23) 23	(23) 2.5	(23) RD / BN	(23) 4240	(23) Battery Positive Voltage	(23) I	(23) —
(24) 24	(24) 2.5	(24) RD / BN	(24) 4240	(24) Battery Positive Voltage	(24) I	(24) —
(25) 25	(25) 2.5	(25) RD / GY	(25) 3540	(25) Battery Positive Voltage	(25) I	(25) —
(26) 26	(26) 0.75	(26) RD / BN	(26) 3640	(26) Battery Positive Voltage	(26) II	(26) —
27 - 28	—	—	—	Not Occupied	—	—
(29) 29	(29) 0.5	(29) RD / BU	(29) 5240	(29) Battery Positive Voltage	(29) II	(29) —
(30) 30	(30) 0.5	(30) RD / VT	(30) 1940	(30) Battery Positive Voltage	(30) II	(30) —
(31) 31	(31) 0.35	(31) RD / WH	(31) 7240	(31) Battery Positive Voltage	(31) II	(31) —
(32) 32	(32) 0.5	(32) YE	(32) 6812	(32) Out of Park Signal	(32) II	(32) —
33 - 36	—	—	—	Not Occupied	—	—
(37) 37	(37) 2.5	(37) RD / GY	(37) 3540	(37) Battery Positive Voltage	(37) I	(37) —
38	—	—	—	Not Occupied	—	—

X51R Instrument Panel Wiring Harness Junction Block - Right X2

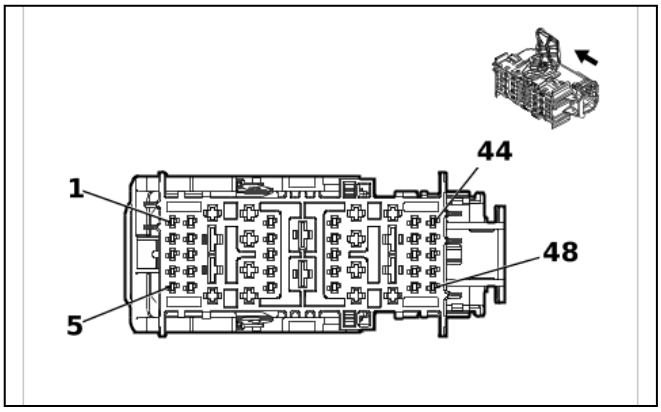

5403539

Connector Part Information

- Harness Type: Instrument Panel Wiring Harness
- OEM Connector: 35264616
- Service Connector: 19371180
- Description: 48-Way F 1.5, 2.8, 6.3 CTS Series(GN)

Terminal Part Information

Terminal Type ID	Terminated Lead	Diagnostic Test Probe	Terminal Removal Tool
I	19369711	J-35616-14 (GN)	EL-38125-560A
II	84764078	J-35616-42 (RD)	J-38125-215A
III	84779405	J-35616-35 (VT)	J-38125-215A

X51R Instrument Panel Wiring Harness Junction Block - Right X2

Pin	Size	Color	Circuit	Function	Terminal Type ID	Option
(1) 1	(1) 0.5	(1) BK	(1) 1050	(1) Ground	(1) I	(1) —
2 - 7	—	—	—	Not Occupied	—	—
(8) 8	(8) 0.5 (8) 0.75	(8) RD / GY (8) RD / VT	(8) 4140 (8) 14240	(8) Battery Positive Voltage (8) Battery Positive Voltage	(8) I	(8) — (8) KGU
(9) 9	(9) 0.5	(9) RD / YE	(9) 6540	(9) Battery Positive Voltage	(9) I	(9) —
10	—	—	—	Not Occupied	—	—
(11) 11	(11) 0.75	(11) RD / GN	(11) 10240	(11) Battery Positive Voltage Police	(11) III	(11) —
12 - 13	—	—	—	Not Occupied	—	—
(14) 14	(14) 0.35	(14) RD / BU	(14) 3240	(14) Battery Positive Voltage	(14) III	(14) —
(15) 15	(15) 0.35	(15) RD / BN	(15) 10040	(15) Battery Positive Voltage	(15) III	(15) —
(16) 16	(16) 1	(16) RD / VT	(16) 4640	(16) Battery Positive Voltage	(16) III	(16) —
(17) 17	(17) 0.35	(17) RD / WH	(17) 6440	(17) Battery Positive Voltage	(17) III	(17) —
(18) 18	(18) 0.35	(18) RD / VT	(18) 3340	(18) Battery Positive Voltage	(18) III	(18) —

Pin	Size	Color	Circuit	Function	Terminal Type ID	Option
19	—	—	—	Not Occupied	—	—
(20) 20	(20) 0.75	(20) RD / GY	(20) 10340	(20) Battery Positive Voltage Police	(20) I	(20) —
21 - 23	—	—	—	Not Occupied	—	—
(24) 24	(24) 5	(24) RD / GY	(24) 2042	(24) Battery Positive Voltage	(24) II	(24) —
(25) 25	(25) 2.5	(25) RD / BU	(25) 4540	(25) Battery Positive Voltage	(25) II	(25) —
26	—	—	—	Not Occupied	—	—
(27) 27	(27) 0.5	(27) RD / YE	(27) 2340	(27) Battery Positive Voltage	(27) I	(27) —
(28) 28	(28) 0.35	(28) RD / VT	(28) 4040	(28) Battery Positive Voltage	(28) I	(28) —
29 - 31	—	—	—	Not Occupied	—	—
(32) 32	(32) 1.5	(32) RD / BU	(32) 2540	(32) Battery Positive Voltage	(32) III	(32) —
(33) 33	(33) 0.75	(33) RD / WH	(33) 1340	(33) Battery Positive Voltage	(33) III	(33) —
(34) 34	(34) 0.75	(34) RD / GY	(34) 2140	(34) Battery Positive Voltage	(34) III	(34) —
(35) 35	(35) 1	(35) RD / GY	(35) 2840	(35) Battery Positive Voltage	(35) III	(35) —
36 - 40	—	—	—	Not Occupied	—	—
(41) 41	(41) 0.75	(41) RD / GN	(41) 5140	(41) Battery Positive Voltage	(41) I	(41) —
(42) 42	(42) 0.35	(42) RD / GN	(42) 5140	(42) Battery Positive Voltage	(42) I	(42) —
43 - 44	—	—	—	Not Occupied	—	—
(45) 45	(45) 0.5	(45) RD / WH	(45) 2740	(45) Battery Positive Voltage	(45) I	(45) —
46 - 48	—	—	—	Not Occupied	—	—

X51R Instrument Panel Wiring Harness Junction Block - Right X3

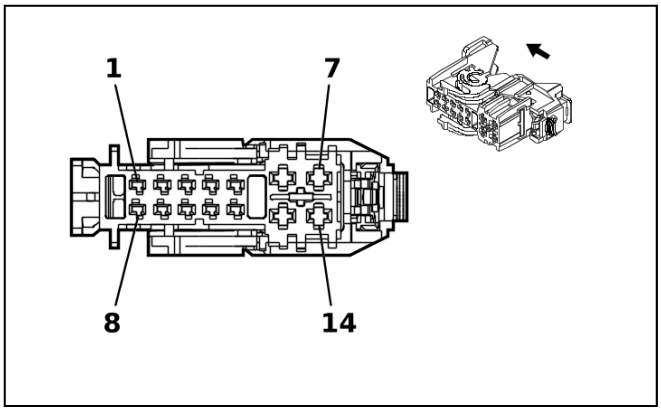

5190115

Connector Part Information

- Harness Type: Instrument Panel Wiring Harness
- OEM Connector: 33377074
- Service Connector: 13525315
- Description: 14-Way F 1.5, 2.8 MCP Series(GY)

Terminal Part Information

Terminal Type ID	Terminated Lead	Diagnostic Test Probe	Terminal Removal Tool
I	19332366	J-35616-35 (VT)	J-38125-212

X51R Instrument Panel Wiring Harness Junction Block - Right X3

Pin	Size	Color	Circuit	Function	Terminal Type ID	Option
1 - 6	—	—	—	Not Occupied	—	—
(7) 7	(7) 1	(7) RD / YE	(7) 240	(7) Battery Positive Voltage	(7) I	(7) —
8 - 14	—	—	—	Not Occupied	—	—

X53A Body Wiring Harness Junction Block - Rear Label

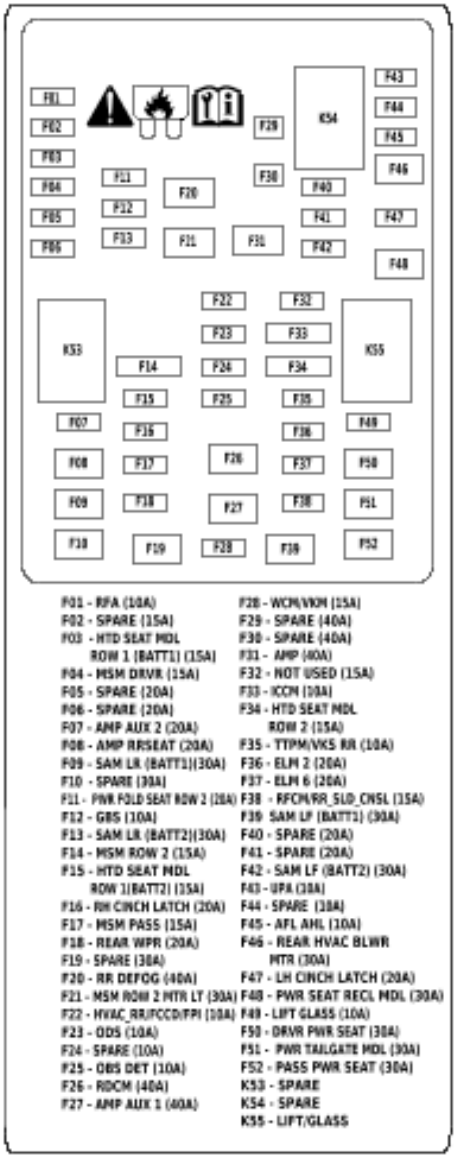

6665308

X53A Body Wiring Harness Junction Block - Rear Top View

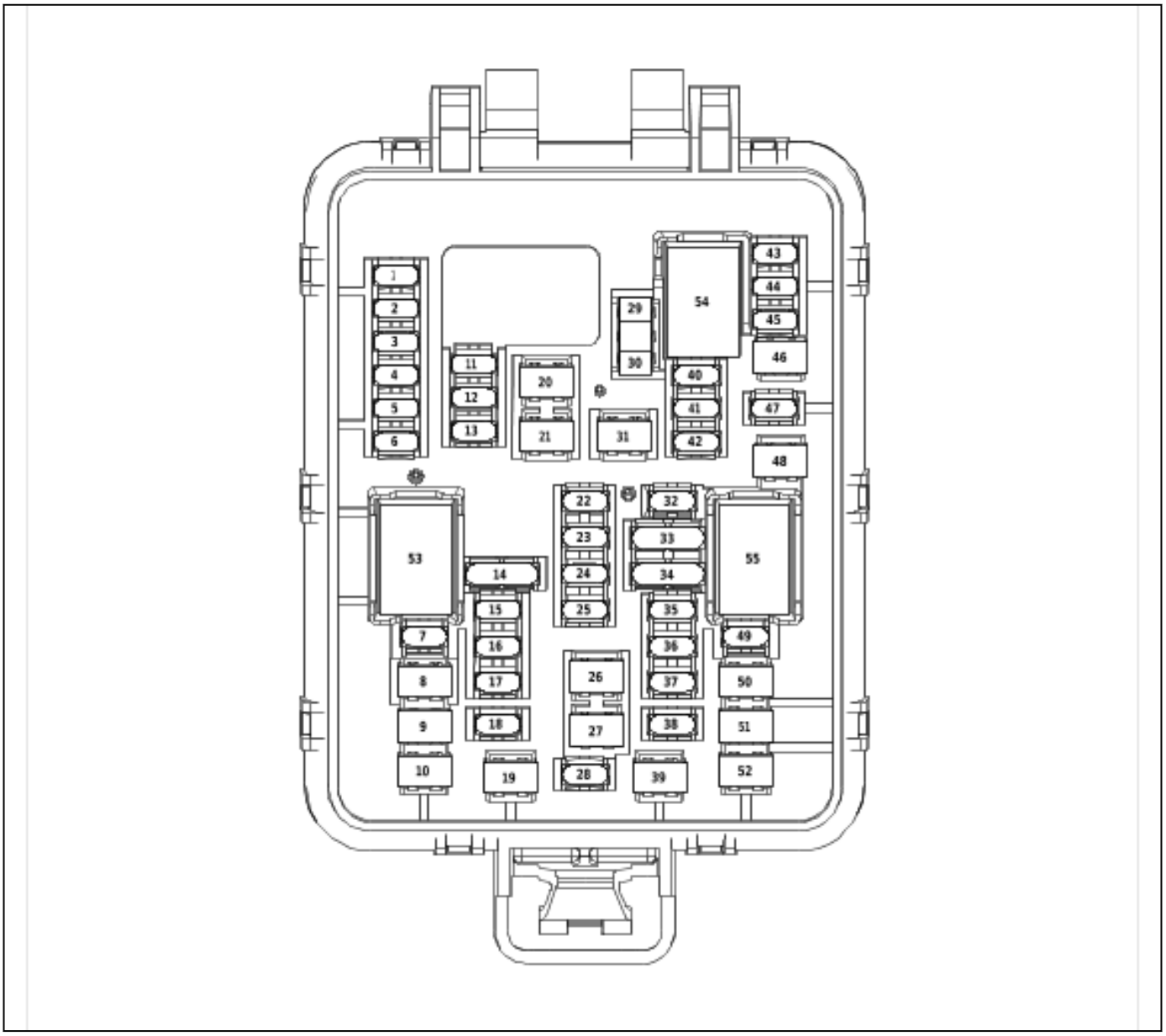

5331356

Usage Table

No.	Device Label Name	Device Assigned Name	Rating	Description
Fuses				
F01	RFA	F1RA	10A	• K77 Remote Function Actuator Module
F02	SPARE	F2RA	15A	• Not Used
F03	HTD SEAT MDL ROW 1 (BATT1)	F3RA	15A	• K29FV Front Seat Heater Vent Control Module (KA1)
F04	MSM DRVR	F4RA	15A	• K40D Driver Seat Adjuster Memory Module (A45/AUN) • K104DP Front Seat Bladder Control Module - Driver Primary (AVK) • S64D Front Seat Adjuster Switch - Driver (A45/AUN)

No.	Device Label Name	Device Assigned Name	Rating	Description
F05	SPARE	F5RA	20A	• Not Used
F06	SPARE	F6RA	20A	• Not Used
F07	AMP AUX 2	F7RA	20A	• Not Used
F08	AMP RRSEAT	F8RA	20A	• Not Used
F09	SAM LR (BATT1)	F9RA	30A	• Not Used
F10	SPARE	F10RA	30A	• Not Used
F11	PWR FOLD SEAT ROW 2	F11RA	20A	• M107LR Folding Rear Seat Back Actuator - Left (ATN/ATT) • M107RR Folding Rear Seat Back Actuator - Right (ATN/ATT)
F12	GBS	F12RA	10A	• B159R Quarter Window Glass Breakage Sensor - Right (UTU/UTV)
F13	SAM LR (BATT2)	F13RA	30A	• Not Used
F14	MSM ROW 2	F14RA	15A	• Not Used
F15	HTD SEAT MDL ROW 1 (BATT 2)	F15RA	15A	• K29FV Front Seat Heater Vent Control Module (KA1)
F16	RH CINCH LATCH	F16RA	20A	• Not Used
F17	MSM PASS	F17RA	15A	• K104P Front Seat Bladder Control Module - Passenger (AVU)
F18	REAR WPR	F18RA	20A	• M45 Rear Winodw Wiper Motor
F19	SPARE	F19RA	30A	• Not Used
F20	RR DEFOG	F20RA	40A	• E18 Rear Window Defogger Grid • F12RA
F21	MSM ROW 2 MTR LT	F21RA	30A	• Not Used
F22	HVAC_RR/ FCCD/FPI	F22RA	10A	• A34 Heater and Air Conditioning Auxiliary Control
F23	ODS	F23RA	10A	• K313 Interior Object Detection Module
F24	SPARE	F24RA	10A	• Not Used
F25	OBS DET	F25RA	10A	• B218L Side Obstacle Detection Control Module - Left ((UKI/UKW)-UKL) • B218R Side Obstacle Detection Control Module - Right ((UKI/UKW)-UKL) • B233LR Short Range Radar Sensor - Left Rear (UKI/UKZ) • B233RR Short Range Radar Sensor - Right Rear (UKI/UKZ) • B233SL Short Range Radar Rear Side Sensor - Left (UKL) • B233SR Short Range Radar Rear Side Sensor - Right (UKL)
F26	RDCM	F26RA	40A	• K164 Differential Control Module (G96)
F27	AMP AUX 1	F27RA	40A	• Not Used
F28	WCM/VKM	F28RA	15A	• K183 UHF Short Range Low Energy Remote Control Access Transceiver (BOR/BOY) • T22 Wireless Accessory Charging Module (K7A)
F29	SPARE	F29RA	40A	• Not Used
F30	SPARE	F30RA	40A	• Not Used

No.	Device Label Name	Device Assigned Name	Rating	Description
F31	AMP	F31RA	40A	• T3 Audio Amplifier (UQS)
F32	NOT USED	F32RA	15A	• Not Used
F33	ICCM	F33RA	10A	• K38 Chassis Control Module (G96)
F34	HTD SEAT MDL ROW 2	F34RA	15A	• K29R Rear Seat Heater Control Module (KA6)
F35	TTPM/VKS RR	F35RA	10A	• B342B UHF Low Energy Remote Control Access Sensor Transceiver 2 (BOR/BOY) • B342D UHF Low Energy Remote Control Access Sensor Transceiver 4 (BOR/BOY) • B342E UHF Low Energy Remote Control Access Sensor Transceiver 5 (BOR/BOY) • K214 Trailer Tire Pressure Indicator Module (UET)
F36	ELM 2	F36RA	20A	• K219 Lighting Control Module
F37	ELM 6	F37RA	20A	• K219 Lighting Control Module
F38	RFCM/ RR_SLD_CSL	F38RA	15A	• K175 Front Floor Console Compartment Cooler (DCK) • K230 Front Floor Console Control Module (DCH)
F39	SAM LF (BATT1)	F39RA	30A	• Not Used
F40	SPARE	F40RA	20A	• Not Used
F41	SPARE	F41RA	20A	• Not Used
F42	SAM LF (BATT2)	F42RA	30A	• Not Used
F43	UPA	F43RA	10A	• K182 Parking Assist Control Module
F44	SPARE	F44RA	10A	• Not Used
F45	AFL AHL	F45RA	10A	• Not Used
F46	REAR HVAC BLWR MTR	F46RA	30A	• K8AB Blower Motor Control Module - Rear
F47	LH CINCH LATCH	F47RA	20A	• Not Used
F48	PWR SEAT RECL MDL	F48RA	30A	• K169 Folding 3rd Row Seat Module (AS8)
F49	LIFT GLASS	F49RA	10A	• M33 Liftgate Window Latch
F50	DRVR PWR SEAT	F50RA	30A	• K40D Driver Seat Adjuster Memory Module (A45) • S65D Front Seat Lumbar Switch - Driver (AL9)
F51	PWR TAILGATE MDL	F51RA	30A	• K194 Rear Gate Module (TB5/TCP)
F52	PASS PWR SEAT	F52RA	30A	• S64P Front Seat Adjuster Switch - Passenger • S65P Front Seat Lumbar Switch - Passenger (AT9)
Relays				
K53	SPARE	—	—	• Not Used
K54	SPARE	—	—	• Not Used
K55	LIFT GLASS	KR162 Liftgate Window Release Relay	—	• F49RA
Important: Relays listed below are non-serviceable Printed Circuit Board (PCB) relays and are internal to the block.				
—	—	KR5 Rear Defogger Relay	—	• F12RA • F20RA

X53A Body Wiring Harness Junction Block - Rear Bottom View

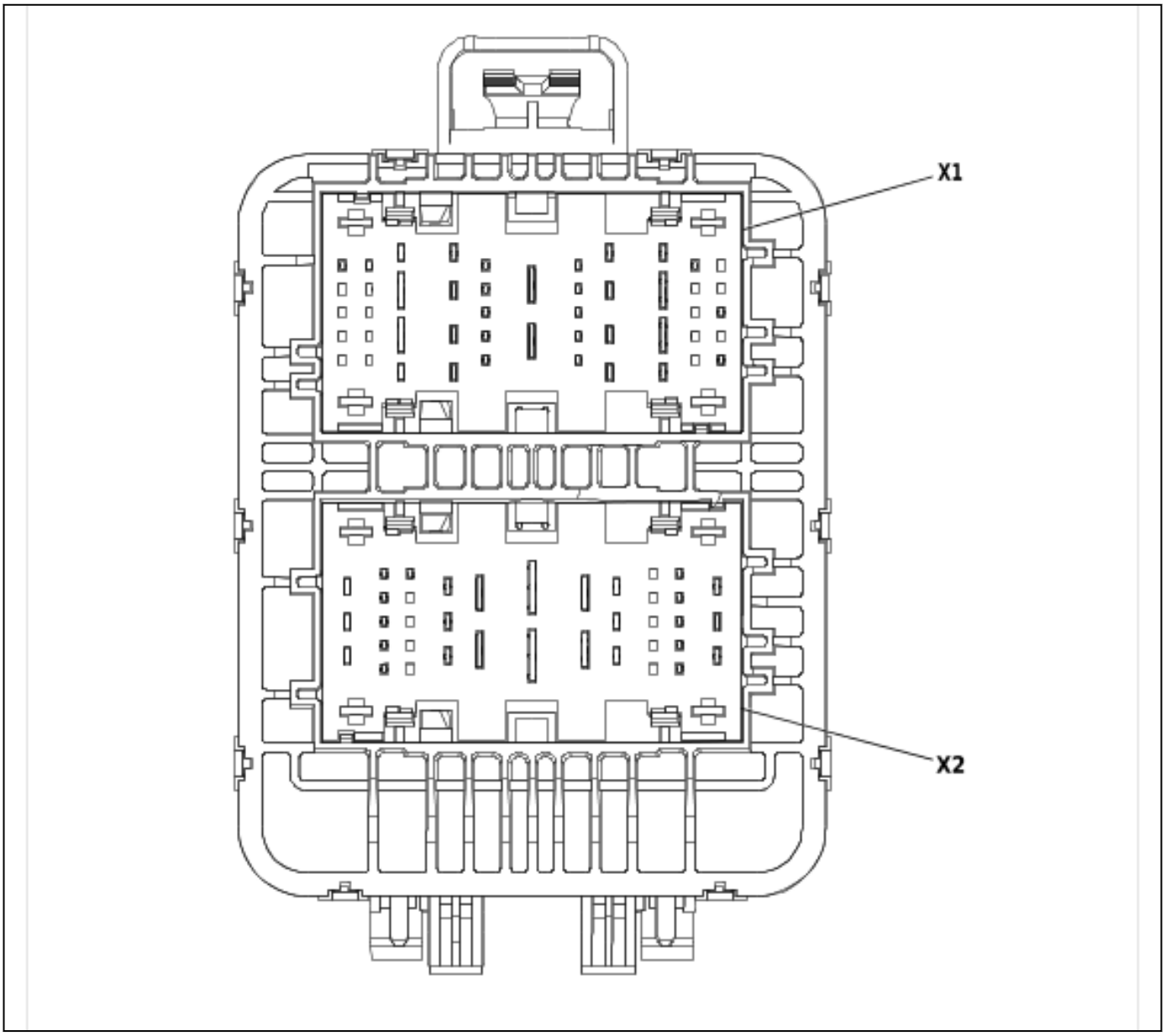

5331358

X53A Body Wiring Harness Junction Block - Rear X1

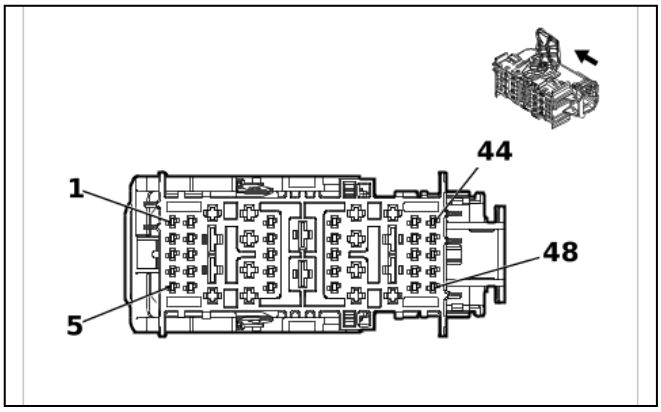

5403539

Connector Part Information

- Harness Type: Body Wiring Harness
- OEM Connector: 35264616
- Service Connector: 19371180
- Description: 48-Way F 1.5, 2.8, 6.3 CTS Series(GN)

Terminal Part Information

Terminal Type ID	Terminated Lead	Diagnostic Test Probe	Terminal Removal Tool
I	19369711	J-35616-14 (GN)	EL-38125-560A
II	84764078	J-35616-42 (RD)	J-38125-215A
III	84779405	J-35616-35 (VT)	J-38125-215A

X53A Body Wiring Harness Junction Block - Rear X1

Pin	Size	Color	Circuit	Function	Terminal Type ID	Option
1 - 4	—	—	—	Not Occupied	—	—
(5) 5	(5) 0.5	(5) BK	(5) 2050	(5) Ground	(5) I	(5) —
6 - 15	—	—	—	Not Occupied	—	—
(16) 16	(16) 0.75	(16) RD / BU	(16) 3940	(16) Battery Positive Voltage	(16) III	(16) —
(17) 17	(17) 1	(17) RD / YE	(17) 3040	(17) Battery Positive Voltage	(17) III	(17) —
18	—	—	—	Not Occupied	—	—
(19) 19	(19) 0.75	(19) RD / GN	(19) 6140	(19) Battery Positive Voltage	(19) I	(19) —
20	—	—	—	Not Occupied	—	—
(21) 21	(21) 1 (21) 0.5	(21) RD / BN (21) RD / BN	(21) 4940 (21) 4940	(21) Battery Positive Voltage (21) Battery Positive Voltage	(21) I (21) I	(21) UKI / UKW / UGN (21) UKR
(22) 22	(22) 0.75 (22) 0.5	(22) RD / BN (22) RD / BN	(22) 7540 (22) 7540	(22) Battery Positive Voltage (22) Battery Positive Voltage	(22) I (22) I	(22) UKI / UKW / UGN (22) UKR
(23) 23	(23) 0.35	(23) RD / GN	(23) 11440	(23) Battery Positive Voltage	(23) I	(23) —

Pin	Size	Color	Circuit	Function	Terminal Type ID	Option
(24) 24	(24) 3	(24) RD / GY	(24) 5540	(24) Battery Positive Voltage	(24) II	(24) —
25	—	—	—	Not Occupied	—	—
(26) 26	(26) 0.75	(26) RD / WH	(26) 5740	(26) Battery Positive Voltage	(26) I	(26) —
27 - 28	—	—	—	Not Occupied	—	—
(29) 29	(29) 0.5	(29) RD / GY	(29) 4840	(29) Battery Positive Voltage	(29) I	(29) —
(30) 30	(30) 0.5	(30) RD / VT	(30) 6340	(30) Battery Positive Voltage	(30) I	(30) —
(31) 31	(31) 1	(31) RD / GN	(31) 1540	(31) Battery Positive Voltage	(31) III	(31) —
(32) 32	(32) 1	(32) RD / BU	(32) 840	(32) Battery Positive Voltage	(32) III	(32) —
(33) 33	(33) 1	(33) RD / VT	(33) 8640	(33) Battery Positive Voltage	(33) III	(33) —
34	—	—	—	Not Occupied	—	—
(35) 35	(35) 0.35	(35) BU / GN	(35) 4089	(35) Rear Closure Motor Control	(35) III	(35) —
(36) 36	(36) 2.5	(36) RD / YE	(36) 5040	(36) Battery Positive Voltage	(36) II	(36) —
(37) 37	(37) 2.5	(37) RD / BN	(37) 3842	(37) Battery Positive Voltage	(37) II	(37) —
(38) 38	(38) 2.5	(38) RD / YE	(38) 7440	(38) Battery Positive Voltage	(38) III	(38) —
39 - 42	—	—	—	Not Occupied	—	—
(43) 43	(43) 0.75	(43) RD / BU	(43) 6740	(43) Battery Positive Voltage	(43) I	(43) —
(44) 44	(44) 0.35	(44) GY / YE	(44) 6188	(44) Liftgate Window/Rear Compartment Lid Motor Unlatch Control	(44) I	(44) —
45	—	—	—	Not Occupied	—	—
(46) 46	(46) 0.5	(46) RD / GN	(46) 2642	(46) Battery Positive Voltage	(46) I	(46) —
47 - 48	—	—	—	Not Occupied	—	—

X53A Body Wiring Harness Junction Block - Rear X2

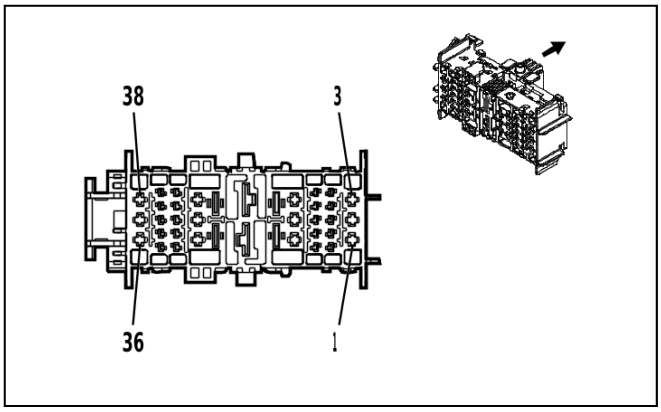

4994230

Connector Part Information

- Harness Type: Body Wiring Harness
- OEM Connector: 35729474
- Service Connector: 85791494
- Description: 38-Way F 1.5, 2.8, 6.3 MCP, 9.5 MCON-LL Series(GY)

Terminal Part Information

Terminal Type ID	Terminated Lead	Diagnostic Test Probe	Terminal Removal Tool
I	19332366	J-35616-35 (VT)	J-38125-212
II	19371175	J-35616-2A (GY)	EL-38125-560A
III	84764078	J-35616-42 (RD)	J-38125-556
IV	Not required	J-35616-22 (RD)	No Tool Required

X53A Body Wiring Harness Junction Block - Rear X2

Pin	Size	Color	Circuit	Function	Terminal Type ID	Option
(1) 1	(1) 0.75	(1) RD / BN	(1) 2240	(1) Battery Positive Voltage	(1) I	(1) —
2 - 3	—	—	—	Not Occupied	—	—
(4) 4	(4) 0.75	(4) RD / BN	(4) 6640	(4) Battery Positive Voltage	(4) II	(4) —
(5) 5	(5) 0.5	(5) RD / VT	(5) 2640	(5) Battery Positive Voltage	(5) II	(5) —
6	—	—	—	Not Occupied	—	—
(7) 7	(7) 0.35	(7) BN / VT	(7) 193	(7) Rear Defogger Relay Control	(7) II	(7) —
8 - 13	—	—	—	Not Occupied	—	—
(14) 14	(14) 1	(14) RD / GY	(14) 6240	(14) Battery Positive Voltage	(14) I	(14) —
(15) 15	(15) 0.5	(15) YE / BK	(15) 2930	(15) Glass Breakage Sensor Supply Voltage	(15) I	(15) —
16	—	—	—	Not Occupied	—	—
(17) 17	(17) 2.5	(17) BN / VT	(17) 293	(17) Rear Defogger Grid Control	(17) III	(17) —
18	—	—	—	Not Occupied	—	—
(19) 19	(19) 10	(19) RD / GN	(19) 1942	(19) Battery Positive Voltage	(19) IV	(19) —

Pin	Size	Color	Circuit	Function	Terminal Type ID	Option
(20) 20	(20) 10	(20) RD / WH	(20) 2942	(20) Battery Positive Voltage	(20) IV	(20) —
21	—	—	—	Not Occupied	—	—
(22) 22	(22) 3	(22) RD / YE	(22) 3740	(22) Battery Positive Voltage	(22) III	(22) —
23 - 30	—	—	—	Not Occupied	—	—
(31) 31	(31) 0.5	(31) RD / WH	(31) 4740	(31) Battery Positive Voltage	(31) II	(31) —
32 - 35	—	—	—	Not Occupied	—	—
(36) 36	(36) 3	(36) RD / GY	(36) 1740	(36) Battery Positive Voltage	(36) I	(36) —
37	—	—	—	Not Occupied	—	—
(38) 38	(38) 2.5	(38) RD / GY	(38) 7840	(38) Battery Positive Voltage	(38) I	(38) —

A7 Fuel Tank Fuel Pump Module

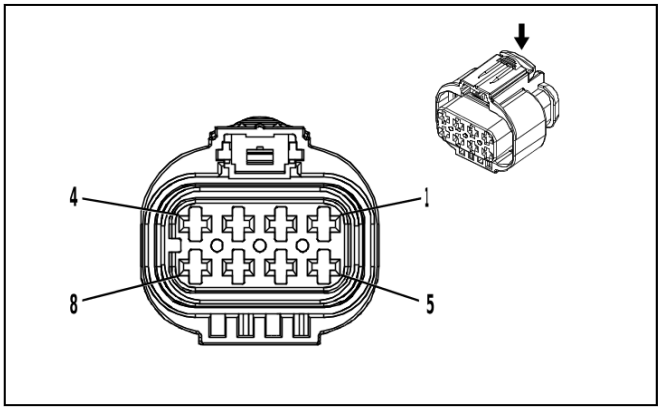

3749582

Connector Part Information

- Harness Type: Chassis Wiring Harness
- OEM Connector: 2-2109441-5
- Service Connector: 19354078
- Description: 8-Way F 2.8 Series, Sealed(L-GY)

Terminal Part Information

Terminal Type ID	Terminated Lead	Diagnostic Test Probe	Terminal Removal Tool
I	Not required	J-35616-35 (VT)	No Tool Required
II	Not required	J-35616-4A (PU)	No Tool Required

A7 Fuel Tank Fuel Pump Module

Pin	Size	Color	Circuit	Function	Terminal Type ID	Option
(1) 1	(1) 2.5	(1) GY	(1) 120	(1) Fuel Pump Control	(1) I	(1) —
(2) 2	(2) 2.5	(2) YE / GY	(2) 4137	(2) Fuel Pump Supply Voltage Phase 2	(2) I	(2) —
(3) 3	(3) 2.5	(3) WH / BN	(3) 4138	(3) Fuel Pump Supply Voltage Phase 3	(3) I	(3) —

Pin	Size	Color	Circuit	Function	Terminal Type ID	Option
(4) 4	(4) 0.5	(4) BK	(4) 7444	(4) Fuel Pump Assembly Shield Ground	(4) II	(4) —
(5) 5	(5) 0.5	(5) BU / GN	(5) 1936	(5) Primary Fuel Level Sensor Signal	(5) II	(5) —
(6) 6	(6) 0.5	(6) BK / GN	(6) 6281	(6) Fuel Level Sensor Low Reference	(6) II	(6) —
7 - 8	—	—	—	Not Occupied	—	—

A9A Outside Rearview Mirror - Driver

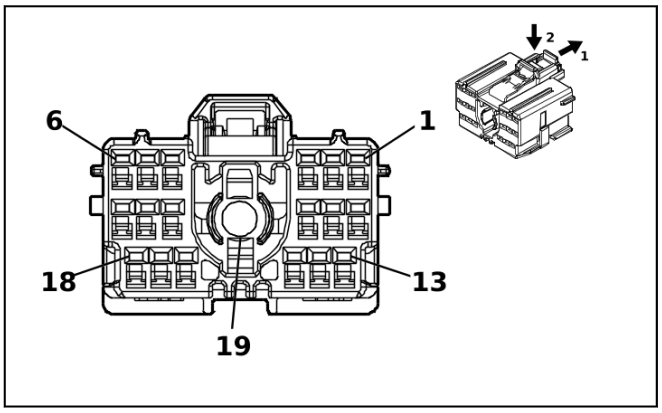

5253439

Connector Part Information

- Harness Type: Front Side Door Door Wiring Harness - Driver
- OEM Connector: 6098-8386
- Service Connector: Service by Harness - See Part Catalog
- Description: 19-Way F 1.2 MCON, Coaxial Series(BK)

Terminal Part Information

Terminal Type ID	Terminated Lead	Diagnostic Test Probe	Terminal Removal Tool
I	Not required	J-35616-12 (BU)	No Tool Required
II	Not required	J-35616-16 (L-GN)	No Tool Required
III	Service by Cable	No Tool Required	No Tool Required

A9A Outside Rearview Mirror - Driver

Pin	Size	Color	Circuit	Function	Terminal Type ID	Option
(1) 1	(1) 0.35	(1) BN / BK	(1) 2790	(1) Left Front Mirror Motor Right [+] Left [-] Control	(1) I	(1) —
(2) 2	(2) 0.35	(2) VT / BU	(2) 2788	(2) Left Front Mirror Motor Up [+] Down [-] Control	(2) I	(2) —
(3) 3	(3) 0.35	(3) WH / GN	(3) 2786	(3) Left Front Mirror Motor Fold In Control	(3) I	(3) —
(4) 4	(4) 0.35	(4) GY / YE	(4) 1760	(4) Left Side Object Detection LED Control	(4) I	(4) —
(5) 5	(5) 0.35	(5) WH / GN	(5) 5966	(5) Approach Lamp Control	(5) I	(5) —
(6) 6	(6) 0.35	(6) WH / YE	(6) 2792	(6) Left Front Mirror Position Sensor Left [-] Right [+] Signal	(6) I	(6) —

Pin	Size	Color	Circuit	Function	Terminal Type ID	Option
(7) 7	(7) 0.35	(7) WH	(7) 606	(7) Left Outside Rearview Mirror Heater Control	(7) I	(7) —
(8) 8	(8) 0.35	(8) WH / GY	(8) 2114	(8) Left Turn Signal Lamp Control 2	(8) I	(8) —
(9) 9	(9) 0.75	(9) BK	(9) 1150	(9) Ground	(9) II	(9) —
(10) 10	(10) 0.35	(10) VT / RD	(10) 2791	(10) Left Front Mirror Position Sensor High Reference	(10) I	(10) —
(11) 11	(11) 0.35	(11) GY / BN	(11) 2787	(11) Left Front Mirror Position Sensor Up [+] Down [-] Signal	(11) I	(11) —
(12) 12	(12) 0.35	(12) BK / YE	(12) 1691	(12) Automatic Day/Night Mirror Low Reference	(12) I	(12) —
13	—	—	—	Not Occupied	—	—
(14) 14	(14) 0.35	(14) YE / BN	(14) 2789	(14) Left Front Mirror Motor Common Control	(14) I	(14) —
(15) 15	(15) 0.35	(15) GY / WH	(15) 2785	(15) Left Front Mirror Motor Fold Out Control	(15) I	(15) —
16	—	—	—	Not Occupied	—	—
(17) 17	(17) 0.35	(17) YE / WH	(17) 1690	(17) Mirror Dimming Signal	(17) I	(17) —
(18) 18	(18) 0.35	(18) BK / BN	(18) 673	(18) Left Outside Rearview Mirror Position Sensor Low Reference	(18) I	(18) —
(19) 19	(19) 0	(19) Coax Cable	(19) 4725	(19) Left Sideview Camera LVDS (Low Voltage Differential Signaling) Coaxial Signal	(19) III	(19) —

A9B Outside Rearview Mirror - Passenger

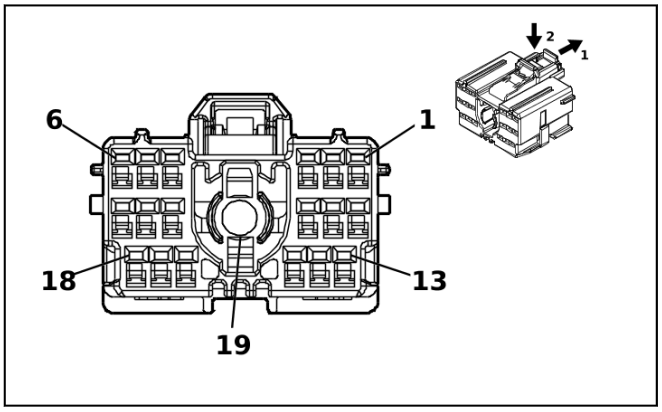

5253439

Connector Part Information

- Harness Type: Front Side Door Door Wiring Harness - Passenger
- OEM Connector: 6098-8386
- Service Connector: Service by Harness - See Part Catalog
- Description: 19-Way F 1.2 MCON, Coaxial Series(BK)

Terminal Part Information

Terminal Type ID	Terminated Lead	Diagnostic Test Probe	Terminal Removal Tool
I	Not required	J-35616-12 (BU)	No Tool Required
II	Not required	J-35616-16 (L-GN)	No Tool Required
III	Service by Cable	No Tool Required	No Tool Required

A9B Outside Rearview Mirror - Passenger

Pin	Size	Color	Circuit	Function	Terminal Type ID	Option
(1) 1	(1) 0.35	(1) GN / BK	(1) 2798	(1) Right Front Mirror Motor Right [+] Left [-] Control	(1) I	(1) —
(2) 2	(2) 0.35	(2) YE / VT	(2) 2796	(2) Right Front Mirror Motor Up [+] Down [-] Control	(2) I	(2) —
(3) 3	(3) 0.35	(3) BU / GY	(3) 2794	(3) Right Front Mirror Motor Fold In Control	(3) I	(3) —
(4) 4	(4) 0.35	(4) GY	(4) 1761	(4) Right Side Object Detection LED Control	(4) I	(4) —
(5) 5	(5) 0.35	(5) WH / GN	(5) 5966	(5) Approach Lamp Control	(5) I	(5) —
(6) 6	(6) 0.35	(6) VT / WH	(6) 2800	(6) Right Front Mirror Position Sensor Left [-] Right [+] Signal	(6) I	(6) —
(7) 7	(7) 0.35	(7) BN / VT	(7) 607	(7) Right Outside Rearview Mirror Heater Control	(7) I	(7) —
(8) 8	(8) 0.35	(8) GN / GY	(8) 2115	(8) Right Turn Signal Lamp Control 2	(8) I	(8) —
(9) 9	(9) 0.5	(9) BK	(9) 1250	(9) Ground	(9) II	(9) —
(10) 10	(10) 0.35	(10) YE / RD	(10) 2799	(10) Right Front Mirror Position Sensor High Reference	(10) I	(10) —
(11) 11	(11) 0.35	(11) BU / YE	(11) 2795	(11) Right Front Mirror Position Sensor Up [+] Down [-] Signal	(11) I	(11) —
12 - 13	—	—	—	Not Occupied	—	—
(14) 14	(14) 0.35	(14) WH	(14) 2797	(14) Right Front Mirror Motor Common Control	(14) I	(14) —
(15) 15	(15) 0.35	(15) YE / WH	(15) 2793	(15) Right Front Mirror Motor Fold Out Control	(15) I	(15) —
16 - 17	—	—	—	Not Occupied	—	—
(18) 18	(18) 0.35	(18) BK / GN	(18) 675	(18) Right Outside Rearview Mirror Position Sensor Low Reference	(18) I	(18) —
(19) 19	(19) 0	(19) Coax Cable	(19) 4724	(19) Right Sideview Camera LVDS (Low Voltage Differential Signaling) Coaxial Signal	(19) III	(19) —

A10 Inside Rearview Mirror X1 (DD8 / DRZ)

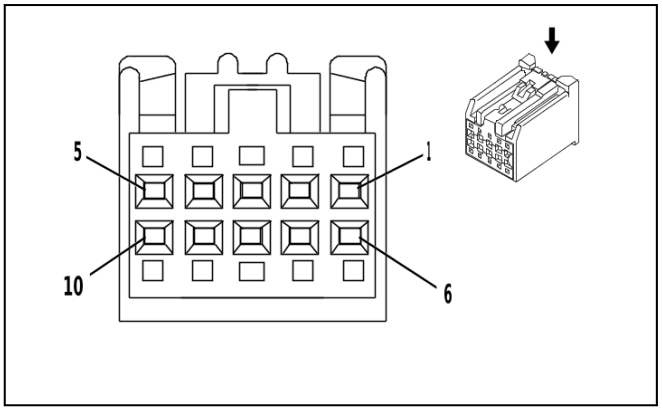

2180211

Connector Part Information

- Harness Type: Headlining Trim Panel Harness
- OEM Connector: AIT2PB-10P-2AK
- Service Connector: 13577390
- Description: 10-Way F 0.64 Kaizen Series(BK)

Terminal Part Information

Terminal Type ID	Terminated Lead	Diagnostic Test Probe	Terminal Removal Tool
I	13575742	J-35616-64B (L-BU)	J-38125-215A

A10 Inside Rearview Mirror X1 (DD8 / DRZ)

Pin	Size	Color	Circuit	Function	Terminal Type ID	Option
(1) 1	(1) 0.35	(1) GN / WH	(1) 24	(1) Backup Lamp Control	(1) I	(1) —
(2) 2	(2) 0.5	(2) VT / WH	(2) 239	(2) Run/Crank Ignition 1 Voltage	(2) I	(2) —
3 - 4	—	—	—	Not Occupied	—	—
(5) 5	(5) 0.35	(5) BK / WH	(5) 1851	(5) Signal Ground	(5) I	(5) —
6 - 7	—	—	—	Not Occupied	—	—
(8) 8	(8) 0.35	(8) BK / YE	(8) 1691	(8) Automatic Day/Night Mirror Low Reference	(8) I	(8) —
(9) 9	(9) 0.35	(9) YE / WH	(9) 1690	(9) Mirror Dimming Signal	(9) I	(9) —
10	—	—	—	Not Occupied	—	—

A10 Inside Rearview Mirror X2 (DRZ)

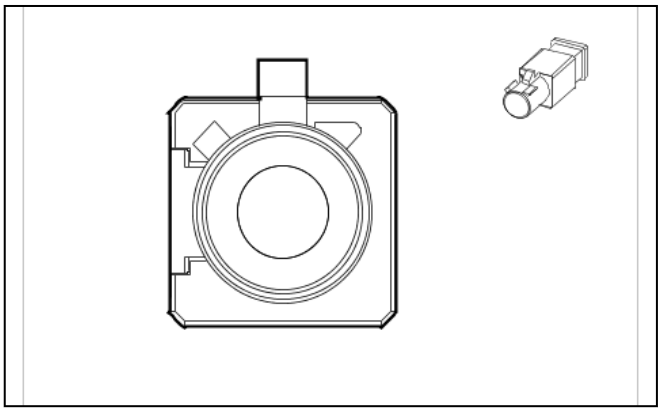

6410256

Connector Part Information

- Harness Type: Antenna Coaxial Cable COAX
- OEM Connector: 13532503
- Service Connector: Service by Cable Assembly — See Part Catalog
- Description: 1-Way M Coax Type(BK)

Terminal Part Information

Terminal Type ID	Terminated Lead	Diagnostic Test Probe	Terminal Removal Tool
I	Not required	No Tool Required	No Tool Required

A10 Inside Rearview Mirror X2 (DRZ)

Pin	Size	Color	Circuit	Function	Terminal Type ID	Option
—	—	Coax Cable	—	Full Display Mirror Rear Camera Coaxial Video Signal	I	—

A11 Radio X1

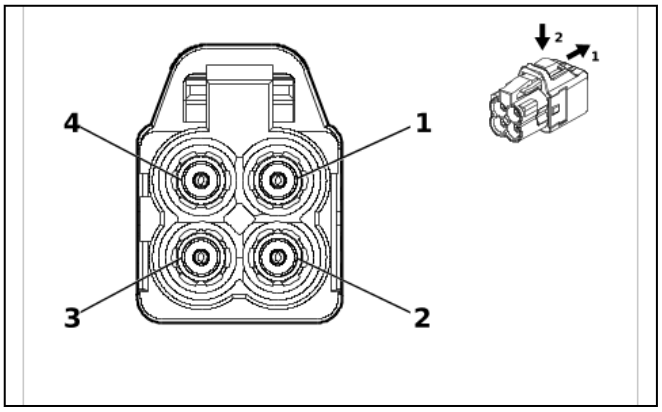

5835118

Connector Part Information

- Harness Type: Instrument Panel Wiring Harness COAX
- OEM Connector: 35520546
- Service Connector: Service by Cable Assembly — See Part Catalog
- Description: 4-Way F Mini Coax Type(BK)

Terminal Part Information

Terminal Type ID	Terminated Lead	Diagnostic Test Probe	Terminal Removal Tool
I	Not required	No Tool Required	No Tool Required

A11 Radio X1

Pin	Size	Color	Circuit	Function	Terminal Type ID	Option
1	—	—	—	Not Occupied	—	—
(2) 2	(2) 0.4	(2) Coax Cable	(2) 6130	(2) Coaxial Antenna XM Signal	(2) I	(2) —
(3) 3	(3) 0.4	(3) Coax Cable	(3) 3297	(3) Coaxial Antenna DAB Signal	(3) I	(3) —
(4) 4	(4) 0.4	(4) Coax Cable	(4) 6001	(4) Coaxial Antenna RF Signal	(4) I	(4) —

A11 Radio X2

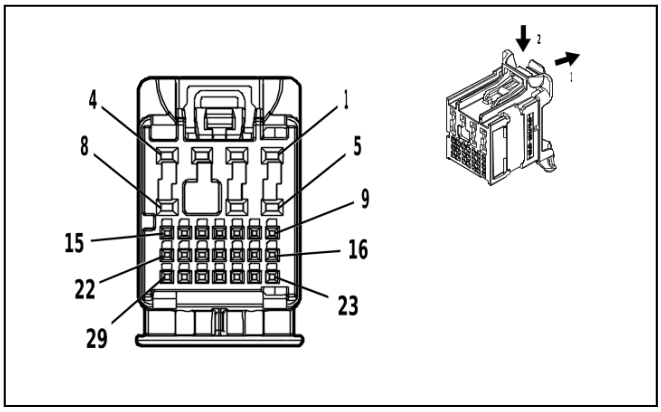

4578560

Connector Part Information

- Harness Type: Instrument Panel Wiring Harness
- OEM Connector: 160014-0011
- Service Connector: 13534971
- Description: 29-Way F 0.5 NANO, 1.2 MCON, stAK50h Series(DK GY with GY Inner Connector)

Terminal Part Information

Terminal Type ID	Terminated Lead	Diagnostic Test Probe	Terminal Removal Tool
I	19370262	EL-35616-58 (BK)	EL-38125-58
II	84729890	J-35616-12 (BU)	J-38125-215A

A11 Radio X2

Pin	Size	Color	Circuit	Function	Terminal Type ID	Option
(1) 1	(1) 0.75	(1) GN	(1) 199	(1) Left Rear Speaker [+] Control	(1) II	(1) —
(2) 2	(2) 0.5	(2) BU	(2) 201	(2) Left Front Speaker 1 [+] Control	(2) II	(2) —
(3) 3	(3) 0.5	(3) YE / BK	(3) 117	(3) Right Front Speaker [-] Control 1	(3) II	(3) —
(4) 4	(4) 0.75	(4) BU / BK	(4) 115	(4) Right Rear Speaker [-] Control	(4) II	(4) —
(5) 5	(5) 0.5	(5) BN / BU	(5) 118	(5) Left Front Speaker [-] Control 1	(5) II	(5) —
(6) 6	(6) 0.5	(6) YE	(6) 200	(6) Right Front Speaker 1 [+] Control	(6) II	(6) —
7	—	—	—	Not Occupied	—	—
(8) 8	(8) 0.75	(8) WH	(8) 46	(8) Right Rear Speaker [+] Control	(8) II	(8) —
(9) 9	(9) 0.35	(9) BU / WH	(9) 4985	(9) AUTOSAR CAN Bus [+] 5 Serial Data	(9) I	(9) —
(10) 10	(10) 0.35	(10) BU / YE	(10) 4984	(10) AUTOSAR CAN Bus [-] 5 Serial Data	(10) I	(10) —
11 - 12	—	—	—	Not Occupied	—	—
(13) 13	(13) 0.35	(13) GN / WH	(13) 24	(13) Backup Lamp Control	(13) I	(13) —
(14) 14	(14) 0.35	(14) GN / YE	(14) 7066	(14) Entertainment Remote Enable Signal	(14) I	(14) —
15 - 17	—	—	—	Not Occupied	—	—
(18) 18	(18) 0.35	(18) GN / BK	(18) 10652	(18) Radio LIN Bus 1	(18) I	(18) —

Pin	Size	Color	Circuit	Function	Terminal Type ID	Option
19 - 21	—	—	—	Not Occupied	—	—
(22) 22	(22) 0.35	(22) GY / YE	(22) 3885	(22) Forward Collision Alert LED Control	(22) I	(22) —
(23) 23	(23) 0.35	(23) GY / BK	(23) 4787	(23) Day Night LED Control	(23) I	(23) —
24 - 29	—	—	—	Not Occupied	—	—

A11 Radio X3

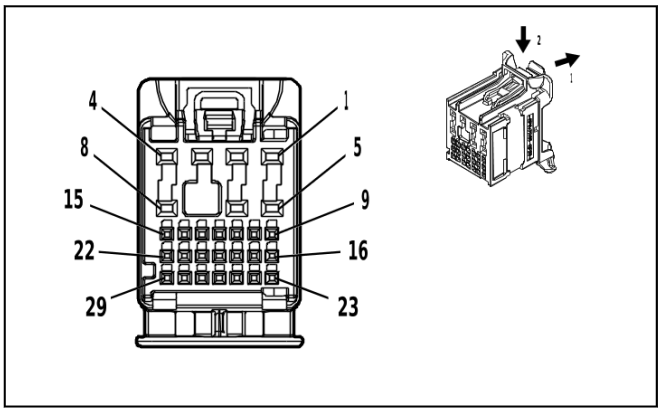

4496253

Connector Part Information

- Harness Type: Instrument Panel Wiring Harness
- OEM Connector: 160014-0014
- Service Connector: 13534974
- Description: 29-Way F 0.5 NANO, 1.2 MCON, stAK50h Series(BK with GY Inner Connector)

Terminal Part Information

Terminal Type ID	Terminated Lead	Diagnostic Test Probe	Terminal Removal Tool
I	19370262	EL-35616-58 (BK)	EL-38125-58
II	84729890	J-35616-12 (BU)	J-38125-215A

A11 Radio X3

Pin	Size	Color	Circuit	Function	Terminal Type ID	Option
(1) 1	(1) 0.5	(1) RD / YE	(1) 2340	(1) Battery Positive Voltage	(1) II	(1) —
(2) 2	(2) 0.5	(2) RD / YE	(2) 2340	(2) Battery Positive Voltage	(2) II	(2) —
(3) 3	(3) 0.5	(3) BK / WH	(3) 1451	(3) Signal Ground	(3) II	(3) —
4 - 5	—	—	—	Not Occupied	—	—
(6) 6	(6) 0.75	(6) BK / WH	(6) 1451	(6) Signal Ground	(6) II	(6) —
7	—	—	—	Not Occupied	—	—
(8) 8	(8) 0.75	(8) GN / BK	(8) 116	(8) Left Rear Speaker [-] Control	(8) II	(8) —

Pin	Size	Color	Circuit	Function	Terminal Type ID	Option
9 - 28	—	—	—	Not Occupied	—	—
(29) 29	(29) 0.35	(29) GN / BN	(29) 507	(29) Wait To Start Indicator Control	(29) I	(29) —

A11 Radio X4

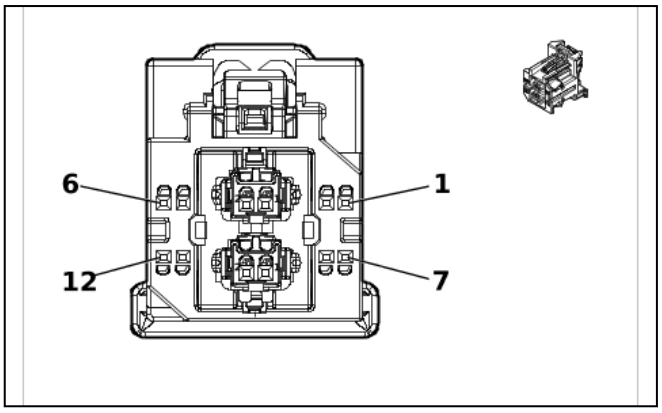

5902882

Connector Part Information

- Harness Type: Instrument Panel Wiring Harness
- OEM Connector: 13546790
- Service Connector: 86555356
- Description: 12-Way F 0.5 CTS, AMEC High Speed Data Series(BK)

Terminal Part Information

Terminal Type ID	Terminated Lead	Diagnostic Test Probe	Terminal Removal Tool
I	Service by Cable	EL-35616-58 (BK)	EL-38125-58

A11 Radio X4

Pin	Size	Color	Circuit	Function	Terminal Type ID	Option
(1) 1	(1) 0.35	(1) BU / WH	(1) 4758	(1) Ethernet Bus 2 [+]	(1) I	(1) —
(2) 2	(2) 0.35	(2) BU	(2) 4757	(2) Ethernet Bus 2 [-]	(2) I	(2) —
3 - 4	—	—	—	Not Occupied	—	—
(5) 5	(5) 0.35	(5) WH	(5) 8580	(5) Automotive Audio Bus A2B Serial Data 1 [+]	(5) I	(5) —
(6) 6	(6) 0.35	(6) GN	(6) 8579	(6) Automotive Audio Bus A2B Serial Data 1 [-]	(6) I	(6) —
(7) 7	(7) 0.35	(7) VT / WH	(7) 7213	(7) Ethernet Bus 5 [+]	(7) I	(7) —
(8) 8	(8) 0.35	(8) VT	(8) 7212	(8) Ethernet Bus 5 [-]	(8) I	(8) —
(9) 9	(9) 0.13	(9) WH	(9) 7210	(9) Ethernet Bus 4 [-]	(9) I	(9) —
(10) 10	(10) 0.13 (10) 0.13	(10) GN (10) WH	(10) 7211 (10) 7211	(10) Ethernet Bus 4 [+] (10) Ethernet Bus 4 [+]	(10) I (10) I	(10) — (10) —
11 - 12	—	—	—	Not Occupied	—	—

A11 Radio X5

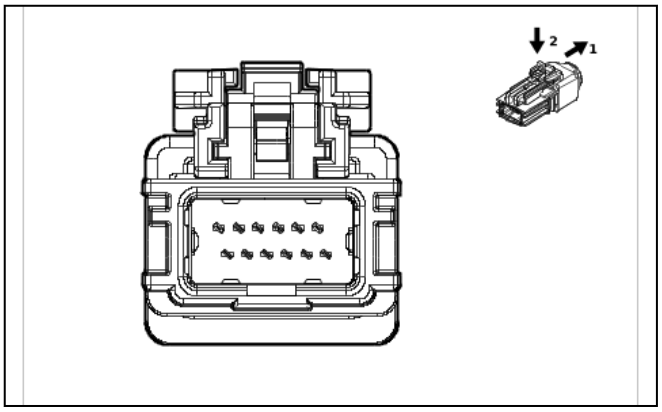

6175343

Connector Part Information
- Harness Type: Instrument Panel Wiring Harness
- OEM Connector: 111146-7103
- Service Connector: Service by Cable Assembly — See Part Catalog
- Description: 12-Way M 2.0 HSAL-2 Series(GY)

Terminal Part Information

Terminal Type ID	Terminated Lead	Diagnostic Test Probe	Terminal Removal Tool
I	Not required	No Tool Required	No Tool Required

A11 Radio X5

Pin	Size	Color	Circuit	Function	Terminal Type ID	Option
—	—	LVDS	—	Virtual Cockpit Unit Instrument Panel Display LVDS (Low Voltage Differential Signaling) Low Reference	I	—

A11 Radio X6 (- UV6)

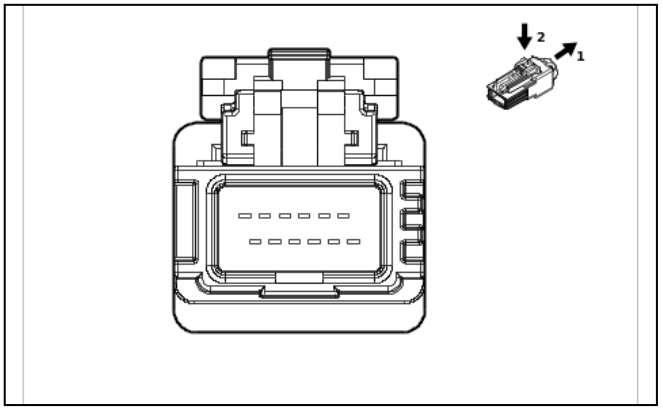

6186830

Connector Part Information
- Harness Type: Instrument Panel Wiring Harness
- OEM Connector: 11146-7203
- Service Connector: Service by Cable Assembly — See Part Catalog
- Description: 12-Way M 2.0 HSAL-2 Series(BN)

Terminal Part Information

Terminal Type ID	Terminated Lead	Diagnostic Test Probe	Terminal Removal Tool
I	Not required	No Tool Required	No Tool Required

A11 Radio X6 (- UV6)

Pin	Size	Color	Circuit	Function	Terminal Type ID	Option
—	—	LVDS	—	Virtual Cockpit Unit Instrument Panel Display LVDS (Low Voltage Differential Signaling) Low Reference	I	—

A11 Radio X6 (UV6)

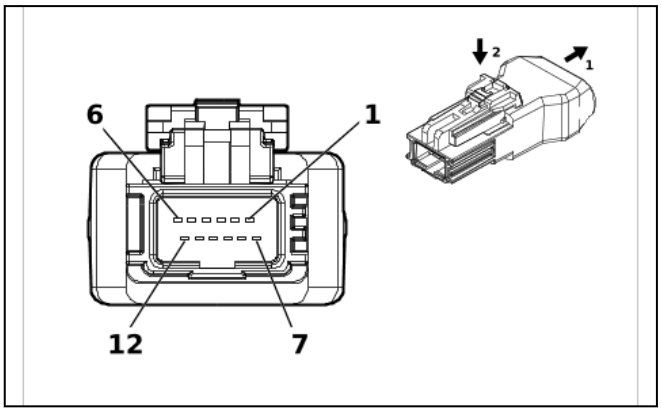

6425428

Connector Part Information

- Harness Type: Instrument Panel Wiring Harness
- OEM Connector: 111146-3407
- Service Connector: Service by Cable Assembly — See Part Catalog
- Description: 12-Way M 2.0 HSAL-2 Series(BN)

Terminal Part Information

Terminal Type ID	Terminated Lead	Diagnostic Test Probe	Terminal Removal Tool
I	Not required	No Tool Required	No Tool Required

A11 Radio X6 (UV6)

Pin	Size	Color	Circuit	Function	Terminal Type ID	Option
—	—	LVDS	—	Virtual Cockpit Unit Instrument Panel Display LVDS (Low Voltage Differential Signaling) Low Reference	I	—

A11 Radio X7 (- (5W4 / 9C1))

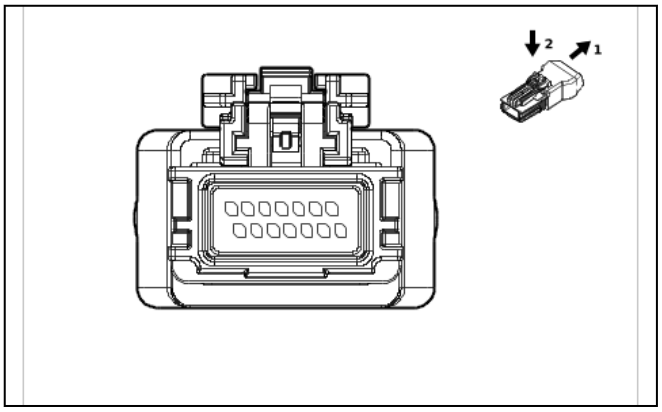

6186791

Connector Part Information
- Harness Type: Instrument Panel Wiring Harness USB
- OEM Connector: 111146-5000
- Service Connector: Service by Cable Assembly — See Part Catalog
- Description: 14-Way M 2.0 HSAL-2 Series(BK)

Terminal Part Information

Terminal Type ID	Terminated Lead	Diagnostic Test Probe	Terminal Removal Tool
I	Not required	No Tool Required	No Tool Required

A11 Radio X7 (- (5W4 / 9C1))

Pin	Size	Color	Circuit	Function	Terminal Type ID	Option
—	—	USB	—	USB Serial Data	I	—

A11 Radio X7 (5W4 / 9C1)

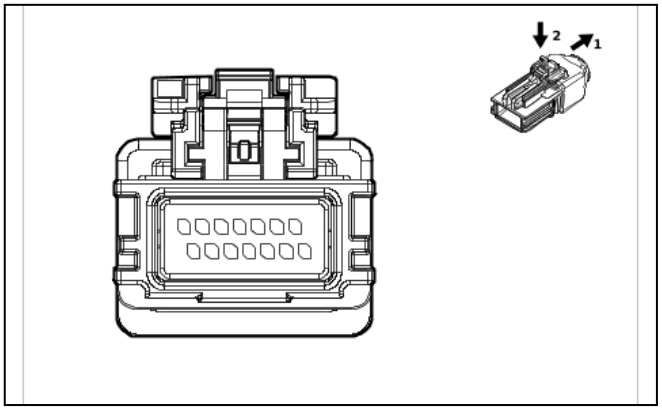

6002723

Connector Part Information
- Harness Type: Instrument Panel Wiring Harness USB
- OEM Connector: 111146-6000
- Service Connector: Service by Cable Assembly — See Part Catalog
- Description: 14-Way M 2.0 HSAL-2 Series(BK)

Terminal Part Information

Terminal Type ID	Terminated Lead	Diagnostic Test Probe	Terminal Removal Tool
I	Not required	No Tool Required	No Tool Required

A11 Radio X7 (5W4 / 9C1)

Pin	Size	Color	Circuit	Function	Terminal Type ID	Option
—	—	USB	—	USB Serial Data	I	—

A11 Radio X8

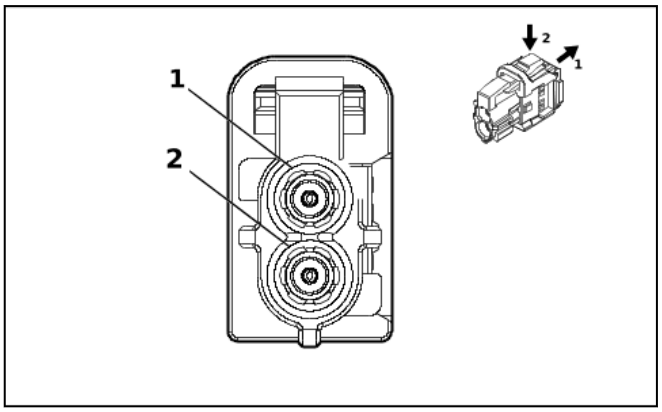

6154796

Connector Part Information

- Harness Type: Instrument Panel Wiring Harness
- OEM Connector: 13544814
- Service Connector: Service by Cable Assembly — See Part Catalog
- Description: 2-Way F Mini Coax Type(BU)

Terminal Part Information

Terminal Type ID	Terminated Lead	Diagnostic Test Probe	Terminal Removal Tool
I	Not required	No Tool Required	No Tool Required

A11 Radio X8

Pin	Size	Color	Circuit	Function	Terminal Type ID	Option
(1) 1	(1) 0.4	(1) BARE	(1) 4721	(1) Rearview Camera LVDS (Low Voltage Differential Signaling) Coaxial Signal	(1) I	(1) —
(2) 2	(2) 0.4	(2) BARE	(2) 10648	(2) Interior Vision Cabin Camera LVDS (Low Voltage Differential Signaling) Coaxial Signal	(2) I	(2) —

A11 Radio X9

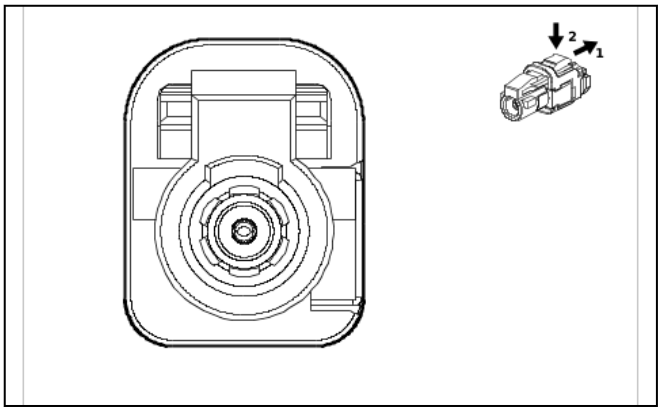

5926227

Connector Part Information
- Harness Type: Instrument Panel Wiring Harness COAX
- OEM Connector: 13544788
- Service Connector: Service by Cable Assembly — See Part Catalog
- Description: 1-Way F Mini Coax Type(BK)

Terminal Part Information

Terminal Type ID	Terminated Lead	Diagnostic Test Probe	Terminal Removal Tool
I	Not required	No Tool Required	No Tool Required

A11 Radio X9

Pin	Size	Color	Circuit	Function	Terminal Type ID	Option
—	—	Coax Cable	—	WiFi Antenna Coaxial Signal	I	—

A11 Radio X10

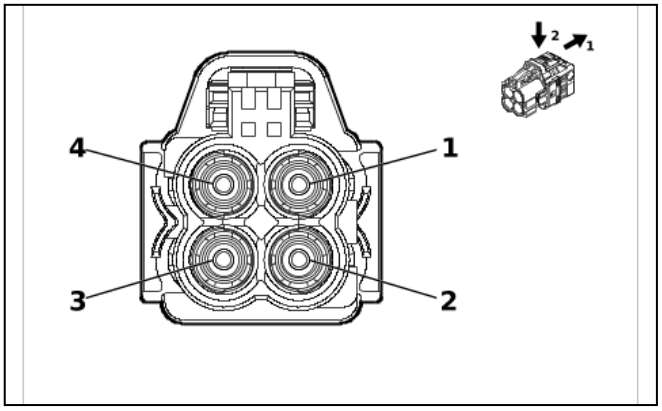

5903560

Connector Part Information
- Harness Type: Instrument Panel Wiring Harness COAX
- OEM Connector: AMZW25-000-B
- Service Connector: Service by Cable Assembly — See Part Catalog
- Description: 4-Way F Mini Coax Type(WH)

Terminal Part Information

Terminal Type ID	Terminated Lead	Diagnostic Test Probe	Terminal Removal Tool
I	Not required	No Tool Required	No Tool Required

A11 Radio X10

Pin	Size	Color	Circuit	Function	Terminal Type ID	Option
(1) 1	(1) 0.4	(1) Coax Cable	(1) 4725	(1) Left Sideview Camera LVDS (Low Voltage Differential Signaling) Coaxial Signal	(1) I	(1) —
(2) 2	(2) 0.4	(2) Coax Cable	(2) 4722	(2) Frontview Camera LVDS (Low Voltage Differential Signaling) Coaxial Signal	(2) I	(2) —
(3) 3	(3) 0.4	(3) Coax Cable	(3) 4724	(3) Right Sideview Camera LVDS (Low Voltage Differential Signaling) Coaxial Signal	(3) I	(3) —
(4) 4	(4) 0.4 (4) 0.4	(4) Coax Cable (4) Coax Cable	(4) 4723 (4) 4721	(4) Video Processing Module LVDS (Low Voltage Differential Signaling) Coaxial Signal (4) Rearview Camera LVDS (Low Voltage Differential Signaling) Coaxial Signal	(4) I (4) I	(4) UKL (4) - UKL

A11 Radio X11

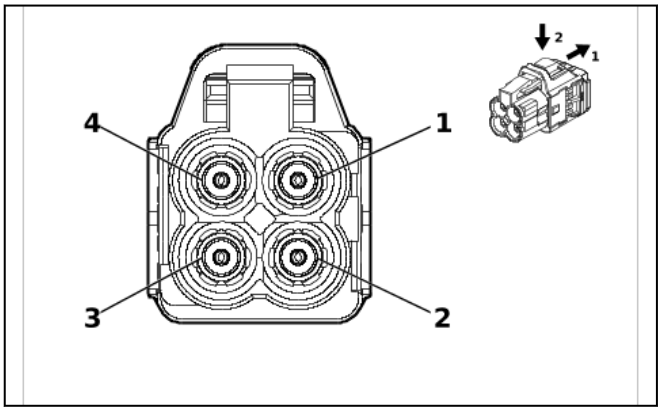

6186811

Connector Part Information

- Harness Type: Instrument Panel Wiring Harness COAX
- OEM Connector: AMZW25-000-C
- Service Connector: Service by Cable Assembly — See Part Catalog
- Description: 4-Way F Mini Coax Type(BU)

Terminal Part Information

Terminal Type ID	Terminated Lead	Diagnostic Test Probe	Terminal Removal Tool
I	Not required	No Tool Required	No Tool Required

A11 Radio X11

Pin	Size	Color	Circuit	Function	Terminal Type ID	Option
(1) 1	(1) 0.4	(1) Coax Cable	(1) 7886	(1) Trailer 2 Rear Vision Camera LVDS (Low Voltage Differential Signaling) Coaxial Signal	(1) I	(1) —
2 - 3	—	—	—	Not Occupied	—	—
(4) 4	(4) 0.4	(4) Coax Cable	(4) 2421	(4) Trailer Rear Vision Camera LVDS (Low Voltage Differential Signaling) Coaxial Signal	(4) I	(4) —

A16 Transfer Case Four Wheel Drive Actuator (NP0 / NQH)

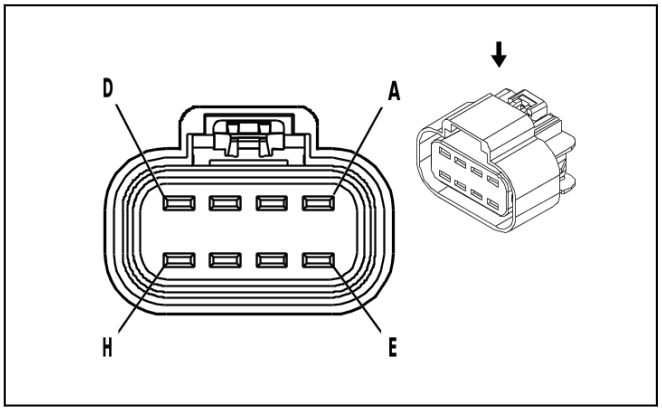

646372

Connector Part Information

- Harness Type: Engine Wiring Harness
- OEM Connector: 13538370
- Service Connector: 19369184
- Description: 8-Way F 280 GT Series, Sealed(BK)

Terminal Part Information

Terminal Type ID	Terminated Lead	Diagnostic Test Probe	Terminal Removal Tool
I	Not required	J-35616-4A (PU)	No Tool Required

A16 Transfer Case Four Wheel Drive Actuator (NP0 / NQH)

Pin	Size	Color	Circuit	Function	Terminal Type ID	Option
A	2.5	YE / GY	1552	Transfer Case Motor Clockwise Control	I	—
B	0.5	BU	8013	Transfer Case Lock Solenoid Control 2	I	—
C	0.5	YE / BN	1569	Transfer Case Lock Solenoid Valve Control	I	—
D	2.5	YE / VT	1553	Transfer Case Motor Counter Clockwise Control	I	—
E	0.5	YE	7474	Incremental Encoder Direction Signal	I	—
F	0.5	BU / GY	7473	Incremental Encoder Impulse Signal	I	—
G	0.5	WH / GN	7475	Incremental Encoder Sensor Voltage Reference	I	—
H	0.5	VT	7476	Incremental Encoder Sensor Low Reference	I	—

A22 Radio Control X1

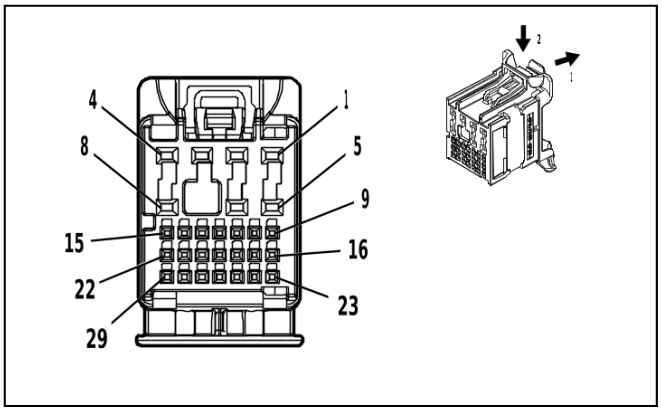

4578560

Connector Part Information

- Harness Type: Instrument Panel Wiring Harness
- OEM Connector: 160014-0011
- Service Connector: 13534971
- Description: 29-Way F 0.5 NANO, 1.2 MCON, stAK50h Series(DK GY with GY Inner Connector)

Terminal Part Information

Terminal Type ID	Terminated Lead	Diagnostic Test Probe	Terminal Removal Tool
I	19370262	EL-35616-58 (BK)	EL-38125-58
II	84729890	J-35616-12 (BU)	J-38125-215A

A22 Radio Control X1

Pin	Size	Color	Circuit	Function	Terminal Type ID	Option
(1) 1	(1) 0.5	(1) VT / YE	(1) 11748	(1) HVAC Indicator Supply Voltage	(1) II	(1) —
(2) 2	(2) 0.5	(2) BK / WH	(2) 1451	(2) Signal Ground	(2) II	(2) —
(3) 3	(3) 0.5	(3) GN / BU	(3) 11762	(3) HVAC Temperature 1 Encoder Phase A Signal	(3) II	(3) —
(4) 4	(4) 0.5	(4) YE / WH	(4) 11763	(4) HVAC Temperature 1 Encoder Phase B Signal	(4) II	(4) —
(5) 5	(5) 0.5	(5) BU / GY	(5) 11766	(5) HVAC Temperature 2 Encoder Phase A Signal	(5) II	(5) —
(6) 6	(6) 0.5	(6) GY / WH	(6) 11767	(6) HVAC Temperature 2 Encoder Phase B Signal	(6) II	(6) —
7	—	—	—	Not Occupied	—	—
(8) 8	(8) 0.5	(8) RD / WH	(8) 1340	(8) Battery Positive Voltage	(8) II	(8) —
(9) 9	(9) 0.35	(9) YE	(9) 11737	(9) Front Defrost Switch Signal	(9) I	(9) —
(10) 10	(10) 0.35	(10) BU / WH	(10) 292	(10) Rear Defogger Switch Signal	(10) I	(10) —
(11) 11	(11) 0.35	(11) VT	(11) 11738	(11) HVAC Fan Up Switch Signal	(11) I	(11) —
(12) 12	(12) 0.35	(12) GY	(12) 11744	(12) HVAC Fan Down Switch Signal	(12) I	(12) —
(13) 13	(13) 0.35	(13) GN	(13) 11745	(13) HVAC Auto Mode Switch Signal	(13) I	(13) —

Pin	Size	Color	Circuit	Function	Terminal Type ID	Option
(14) 14	(14) 0.35	(14) GN / YE	(14) 11757	(14) HVAC White Backlighting Intensity Control	(14) I	(14) —
(15) 15	(15) 0.35	(15) GN / BN	(15) 11758	(15) HVAC Red Backlighting Intensity Control	(15) I	(15) —
(16) 16	(16) 0.35	(16) GN / WH	(16) 11759	(16) HVAC Blue Backlighting Intensity Control	(16) I	(16) —
(17) 17	(17) 0.35	(17) GY / VT	(17) 11760	(17) HVAC Amber Backlighting Intensity Control	(17) I	(17) —
(18) 18	(18) 0.35	(18) BN / WH	(18) 11761	(18) HVAC White Fan Backlighting Intensity Control	(18) I	(18) —
(19) 19	(19) 0.35	(19) BK / YE	(19) 1704	(19) Sensor Low Reference	(19) I	(19) —
(20) 20	(20) 0.35	(20) WH / BK	(20) 1923	(20) Auxiliary HVAC Switch Signal	(20) I	(20) —
(21) 21	(21) 0.35	(21) BN / GN	(21) 11754	(21) HVAC Auto Mode Indicator Control	(21) I	(21) —
(22) 22	(22) 0.35	(22) GN / GY	(22) 11749	(22) HVAC System Enable Indicator Control	(22) I	(22) —
(23) 23	(23) 0.35	(23) BU / VT	(23) 11752	(23) Front Defrost Indicator Control	(23) I	(23) —
(24) 24	(24) 0.35	(24) YE / VT	(24) 11753	(24) Rear Defog Indicator Control	(24) I	(24) —
(25) 25	(25) 0.35	(25) GN / VT	(25) 11755	(25) HVAC Air Conditioning Request Indicator Control	(25) I	(25) —
(26) 26	(26) 0.35	(26) BN / BU	(26) 11756	(26) HVAC Heat Request Indicator Control	(26) I	(26) —
(27) 27	(27) 0.35	(27) BN	(27) 11746	(27) HVAC Air Conditioning Request Switch Signal	(27) I	(27) —
(28) 28	(28) 0.35	(28) BU / BN	(28) 11747	(28) HVAC Heat Request Switch Signal	(28) I	(28) —
29	—	—	—	Not Occupied	—	—

A22 Radio Control X2

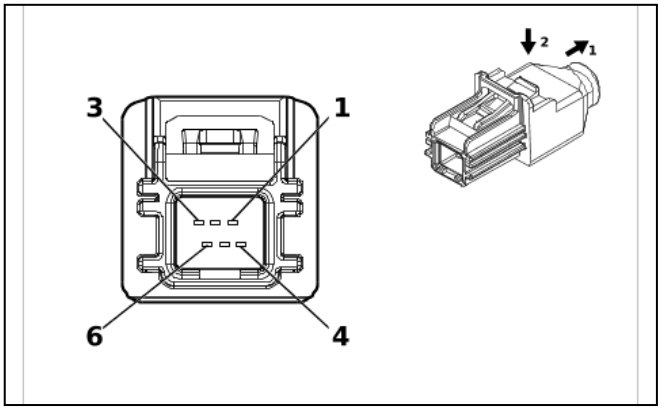

5278781

Connector Part Information

- Harness Type: Instrument Panel Wiring Harness
- OEM Connector: 100337-1123
- Service Connector: Service by Cable Assembly — See Part Catalog
- Description: 6-Way M HSAL-2 Series(GY)

Terminal Part Information

Terminal Type ID	Terminated Lead	Diagnostic Test Probe	Terminal Removal Tool
I	Not required	No Tool Required	No Tool Required

A22 Radio Control X2

Pin	Size	Color	Circuit	Function	Terminal Type ID	Option
—	—	LVDS	—	(Infotainment) Infotainment Display Signal	I	—

A23C Liftgate Latch (TB4)

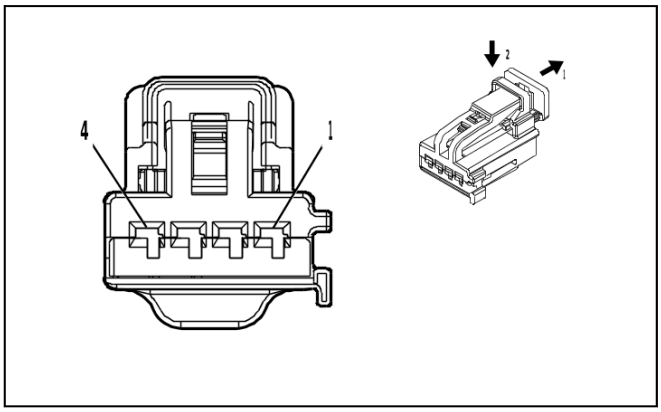

5137287

Connector Part Information

- Harness Type: Liftgate Wiring Harness
- OEM Connector: 15509333
- Service Connector: Service by Harness - See Part Catalog
- Description: 4-Way F 1.5 YESC Series(BK)

Terminal Part Information

Terminal Type ID	Terminated Lead	Diagnostic Test Probe	Terminal Removal Tool
I	Not required	J-35616-2A (GY)	No Tool Required

A23C Liftgate Latch (TB4)

Pin	Size	Color	Circuit	Function	Terminal Type ID	Option
(1) 1	(1) 0.5	(1) VT / GY	(1) 1303	(1) Liftgate Ajar Switch Signal 1	(1) I	(1) —
(2) 2	(2) 0.5	(2) BK	(2) 2050	(2) Ground	(2) I	(2) —
(3) 3	(3) 0.5	(3) BU / WH	(3) 6128	(3) Rear Closure Unlatch Actuator Unlatch Control	(3) I	(3) —
(4) 4	(4) 0.5	(4) GY / BK	(4) 2680	(4) Lock Actuators Unlock Control 2	(4) I	(4) —

A23C Liftgate Latch (TB5 / TCP)

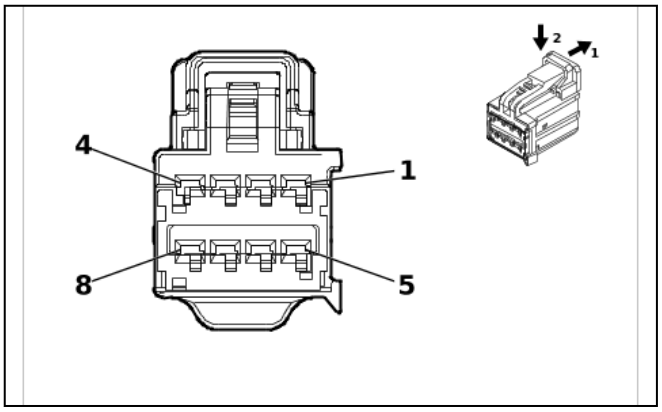

5377684

Connector Part Information

- Harness Type: Liftgate Wiring Harness
- OEM Connector: 15509366
- Service Connector: Service by Harness - See Part Catalog
- Description: 8-Way F 1.5 Kaizen Series(BK)

Terminal Part Information

Terminal Type ID	Terminated Lead	Diagnostic Test Probe	Terminal Removal Tool
I	Not required	J-35616-2A (GY)	No Tool Required

A23C Liftgate Latch (TB5 / TCP)

Pin	Size	Color	Circuit	Function	Terminal Type ID	Option
1 - 2	—	—	—	Not Occupied	—	—
(3) 3	(3) 1	(3) BU / GY	(3) 4682	(3) Rear Closure Cinch Latch Motor Release Control	(3) I	(3) —
(4) 4	(4) 1	(4) BN	(4) 4681	(4) Rear Closure Cinch Latch Motor Cinch Control	(4) I	(4) —
(5) 5	(5) 0.35	(5) BK / VT	(5) 4656	(5) Rear Closure Object Sensor Low Reference	(5) I	(5) —
(6) 6	(6) 0.5	(6) GY / VT	(6) 4678	(6) Rear Closure Latch Unlatch Status	(6) I	(6) —
(7) 7	(7) 0.5	(7) YE / BK	(7) 8085	(7) Rear Closure Latch Primary Status	(7) I	(7) —
(8) 8	(8) 0.5	(8) WH / GN	(8) 8084	(8) Rear Closure Latch Neutral Status	(8) I	(8) —

A23D Front Side Door Latch - Driver

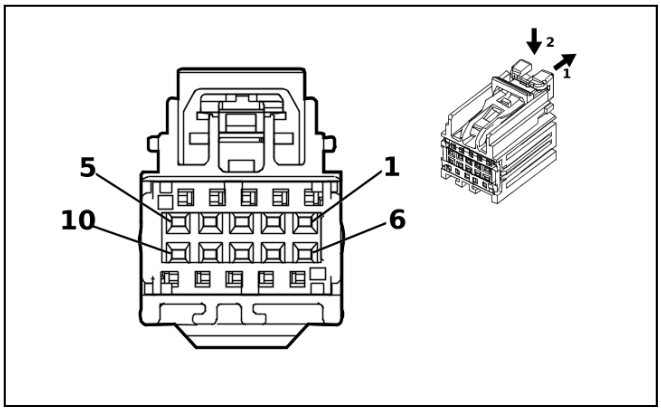

4622549

Connector Part Information

- Harness Type: Front Side Door Door Wiring Harness - Driver
- OEM Connector: 7289-5068-60
- Service Connector: Service by Harness - See Part Catalog
- Description: 10-Way F 0.64 Kaizen Series(GN)

Terminal Part Information

Terminal Type ID	Terminated Lead	Diagnostic Test Probe	Terminal Removal Tool
I	Not required	J-35616-64B (L-BU)	No Tool Required

A23D Front Side Door Latch - Driver

Pin	Size	Color	Circuit	Function	Terminal Type ID	Option
(1) 1	(1) 0.35	(1) GY	(1) 745	(1) Left Front Door Ajar Switch Signal	(1) I	(1) —
(2) 2	(2) 0.35	(2) VT / GY	(2) 126	(2) Left Front Door Open Switch Signal	(2) I	(2) —
(3) 3	(3) 0.75	(3) BK	(3) 1150	(3) Ground	(3) I	(3) —
(4) 4	(4) 0.35	(4) WH / VT	(4) 4258	(4) Left Front Door Lock Status Signal	(4) I	(4) —
5 - 6	—	—	—	Not Occupied	—	—
(7) 7	(7) 0.75	(7) GY	(7) 2681	(7) Left Front Door Lock Actuator Lock Control	(7) I	(7) —
(8) 8	(8) 0.75	(8) WH	(8) 2679	(8) Lock Actuators Unlock Control 1	(8) I	(8) —
9 - 10	—	—	—	Not Occupied	—	—

A23LR Rear Side Door Latch - Left

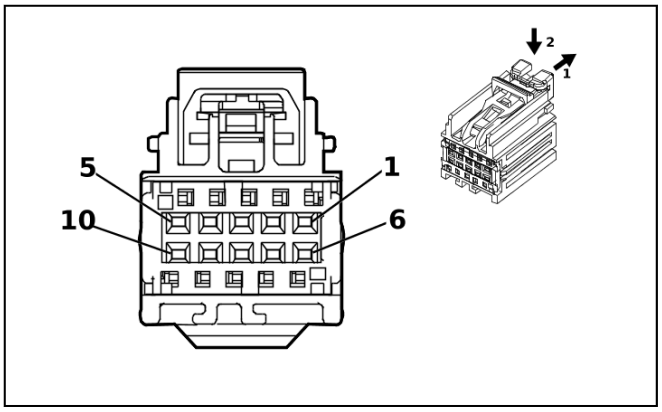

4622549

Connector Part Information

- Harness Type: Rear Side Door Door Wiring Harness - Left
- OEM Connector: 7289-5068-60
- Service Connector: Service by Harness - See Part Catalog
- Description: 10-Way F 0.64 Kaizen Series(GN)

Terminal Part Information

Terminal Type ID	Terminated Lead	Diagnostic Test Probe	Terminal Removal Tool
I	Not required	J-35616-64B (L-BU)	No Tool Required

A23LR Rear Side Door Latch - Left

Pin	Size	Color	Circuit	Function	Terminal Type ID	Option
(1) 1	(1) 0.35	(1) GY	(1) 747	(1) Left Rear Door Ajar Switch Signal	(1) I	(1) —
(2) 2	(2) 0.35	(2) BN / WH	(2) 3269	(2) Child Security Lock Actuator Status Signal Left Rear	(2) I	(2) —
(3) 3	(3) 0.75	(3) BK	(3) 1150	(3) Ground	(3) I	(3) —
(4) 4	(4) 0.35	(4) GN / BU	(4) 4648	(4) Left Rear Door Lock Status Signal	(4) I	(4) —
5 - 6	—	—	—	Not Occupied	—	—
(7) 7	(7) 0.75	(7) BU / YE	(7) 1091	(7) Left Rear Door Lock Actuator Lock Control	(7) I	(7) —
(8) 8	(8) 0.75	(8) WH	(8) 2679	(8) Lock Actuators Unlock Control 1	(8) I	(8) —
(9) 9	(9) 0.75	(9) WH / BU	(9) 3266	(9) Child Security Lock Motor Lock Control	(9) I	(9) —
10	—	—	—	Not Occupied	—	—

A23P Front Side Door Latch - Passenger

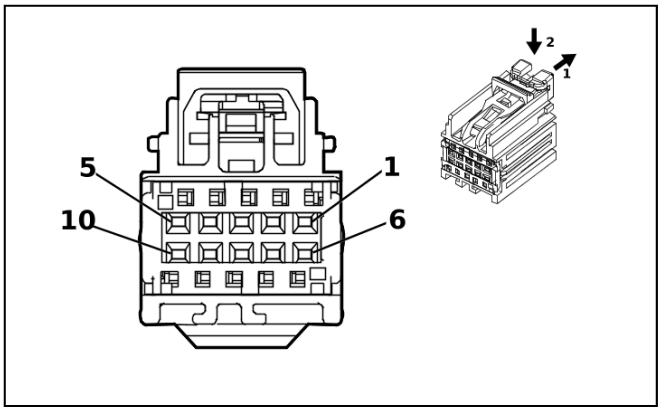

4622549

Connector Part Information

- Harness Type: Front Side Door Door Wiring Harness - Passenger
- OEM Connector: 7289-5068-60
- Service Connector: Service by Harness - See Part Catalog
- Description: 10-Way F 0.64 Kaizen Series(GN)

Terminal Part Information

Terminal Type ID	Terminated Lead	Diagnostic Test Probe	Terminal Removal Tool
I	Not required	J-35616-64B (L-BU)	No Tool Required

A23P Front Side Door Latch - Passenger

Pin	Size	Color	Circuit	Function	Terminal Type ID	Option
1	—	—	—	Not Occupied	—	—
(2) 2	(2) 0.35	(2) VT	(2) 4259	(2) Right Front Door Lock Status Signal	(2) I	(2) —
(3) 3	(3) 0.75	(3) BK	(3) 1250	(3) Ground	(3) I	(3) —
4	—	—	—	Not Occupied	—	—
(5) 5	(5) 0.35	(5) GY	(5) 746	(5) Right Front Door Ajar Switch Signal	(5) I	(5) —
6 - 7	—	—	—	Not Occupied	—	—
(8) 8	(8) 0.75	(8) GY / BK	(8) 2680	(8) Lock Actuators Unlock Control 2	(8) I	(8) —
(9) 9	(9) 0.75	(9) YE / GN	(9) 2682	(9) Right Front Door Lock Actuator Lock Control	(9) I	(9) —
10	—	—	—	Not Occupied	—	—

A23RR Rear Side Door Latch - Right

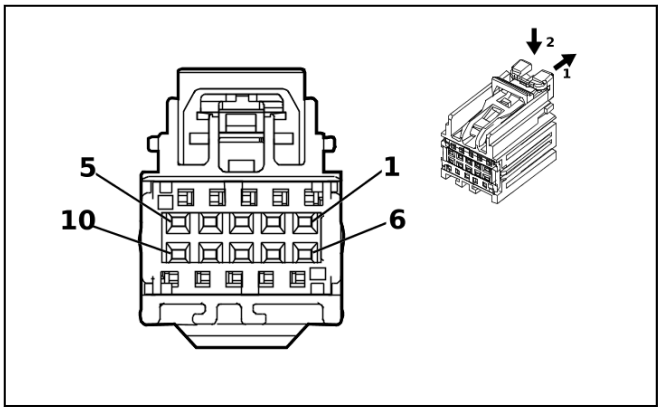

4622549

Connector Part Information

- Harness Type: Rear Side Door Door Wiring Harness - Right
- OEM Connector: 7289-5068-60
- Service Connector: Service by Harness - See Part Catalog
- Description: 10-Way F 0.64 Kaizen Series(GN)

Terminal Part Information

Terminal Type ID	Terminated Lead	Diagnostic Test Probe	Terminal Removal Tool
I	Not required	J-35616-64B (L-BU)	No Tool Required

A23RR Rear Side Door Latch - Right

Pin	Size	Color	Circuit	Function	Terminal Type ID	Option
1	—	—	—	Not Occupied	—	—
(2) 2	(2) 0.35	(2) WH / GY	(2) 4649	(2) Right Rear Door Lock Status Signal	(2) I	(2) —
(3) 3	(3) 0.5	(3) BK	(3) 1250	(3) Ground	(3) I	(3) —
(4) 4	(4) 0.35	(4) GY / BK	(4) 3268	(4) Child Security Lock Actuator Status Signal Right Rear	(4) I	(4) —
(5) 5	(5) 0.35	(5) GY	(5) 748	(5) Right Rear Door Ajar Switch Signal	(5) I	(5) —
6	—	—	—	Not Occupied	—	—
(7) 7	(7) 0.75	(7) WH / BU	(7) 3266	(7) Child Security Lock Motor Lock Control	(7) I	(7) —
(8) 8	(8) 0.75	(8) GY / BK	(8) 2680	(8) Lock Actuators Unlock Control 2	(8) I	(8) —
(9) 9	(9) 0.75	(9) VT / WH	(9) 1094	(9) Right Rear Door Lock Actuator Lock Control	(9) I	(9) —
10	—	—	—	Not Occupied	—	—

A24D Front Side Door Outside Handle - Left (- (BOR / BOY))

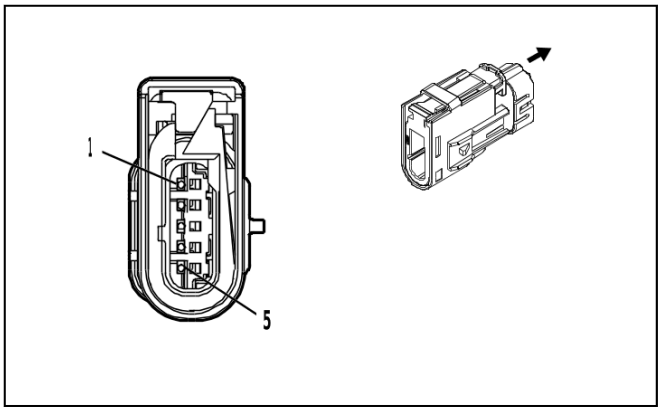

4808325

Connector Part Information
- Harness Type: Front Side Door Door Wiring Harness - Driver
- OEM Connector: SRVWSB-02A-DK
- Service Connector: Service by Harness - See Part Catalog
- Description: 5-Way M 1.2 Series, Sealed(BK)

Terminal Part Information

Terminal Type ID	Terminated Lead	Diagnostic Test Probe	Terminal Removal Tool
I	Not required	J-35616-13 (BU)	No Tool Required

A24D Front Side Door Outside Handle - Left (- (BOR / BOY))

Pin	Size	Color	Circuit	Function	Terminal Type ID	Option
(1) 1	(1) 0.5	(1) BU	(1) 2675	(1) Left Front Exterior Door Handle Switch Unlock Signal	(1) I	(1) —
2 - 4	—	—	—	Not Occupied	—	—
(5) 5	(5) 0.75	(5) BK	(5) 1150	(5) Ground	(5) I	(5) —

A24D Front Side Door Outside Handle - Left (BOR / BOY)

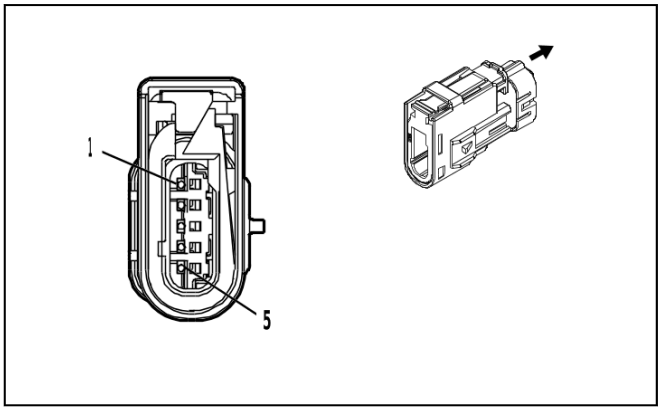

4808321

Connector Part Information
- Harness Type: Front Side Door Door Wiring Harness - Driver
- OEM Connector: SRVWSB-05A-AH
- Service Connector: Service by Harness - See Part Catalog
- Description: 5-Way M 1.2 Series, Sealed(GY)

Terminal Part Information

Terminal Type ID	Terminated Lead	Diagnostic Test Probe	Terminal Removal Tool
I	Not required	J-35616-13 (BU)	No Tool Required
II	Not required	J-35616-17 (L-GN)	No Tool Required

A24D Front Side Door Outside Handle - Left (BOR / BOY)

Pin	Size	Color	Circuit	Function	Terminal Type ID	Option
(1) 1	(1) 0.5	(1) BU	(1) 2675	(1) Left Front Exterior Door Handle Switch Unlock Signal	(1) I	(1) —
(2) 2	(2) 0.5	(2) RD / VT	(2) 1940	(2) Battery Positive Voltage	(2) I	(2) —
(3) 3	(3) 0.35	(3) GN / BK	(3) 2738	(3) Near Field Communication Module LIN Bus 1	(3) II	(3) —
(4) 4	(4) 0.5	(4) BK	(4) 1150	(4) Ground	(4) I	(4) —
(5) 5	(5) 0.5	(5) BK / WH	(5) 1151	(5) Signal Ground	(5) I	(5) —

A24LR Rear Side Door Outside Handle - Left

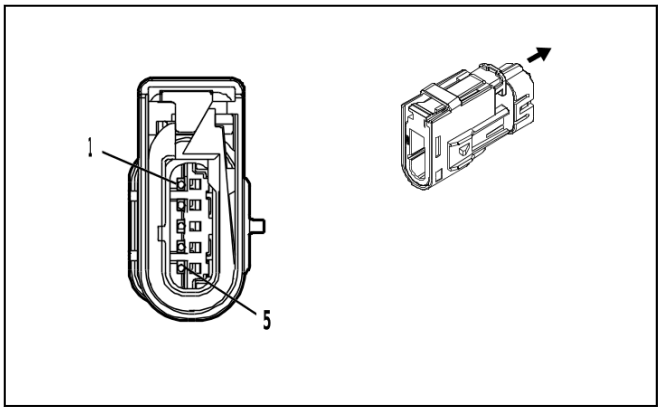

4808325

Connector Part Information

- Harness Type: Rear Side Door Door Wiring Harness - Left
- OEM Connector: SRVWSB-02A-DK
- Service Connector: Service by Harness - See Part Catalog
- Description: 5-Way M 1.2 Series, Sealed(BK)

Terminal Part Information

Terminal Type ID	Terminated Lead	Diagnostic Test Probe	Terminal Removal Tool
I	Not required	J-35616-13 (BU)	No Tool Required
II	Not required	J-35616-17 (L-GN)	No Tool Required

A24LR Rear Side Door Outside Handle - Left

Pin	Size	Color	Circuit	Function	Terminal Type ID	Option
(1) 1	(1) 0.35	(1) WH / VT	(1) 4994	(1) Left Rear Door Exterior Switch Unlock Signal	(1) II	(1) —
2 - 4	—	—	—	Not Occupied	—	—
(5) 5	(5) 0.75	(5) BK	(5) 1150	(5) Ground	(5) I	(5) —

A24P Front Side Door Outside Handle - Right

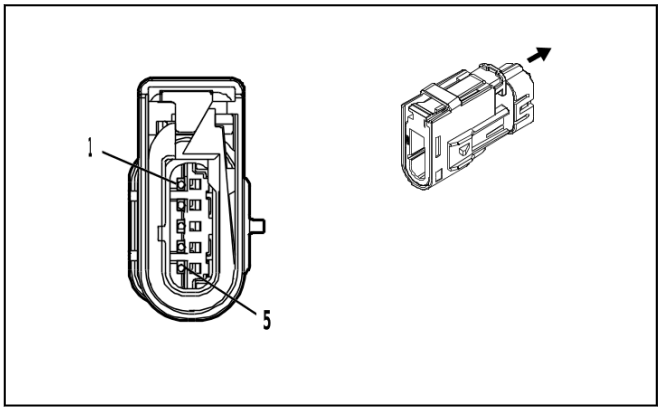

4808325

Connector Part Information

- Harness Type: Front Side Door Door Wiring Harness - Passenger
- OEM Connector: SRVWSB-02A-DK
- Service Connector: Service by Harness - See Part Catalog
- Description: 5-Way M 1.2 Series, Sealed(BK)

Terminal Part Information

Terminal Type ID	Terminated Lead	Diagnostic Test Probe	Terminal Removal Tool
I	Not required	J-35616-13 (BU)	No Tool Required
II	Not required	J-35616-17 (L-GN)	No Tool Required

A24P Front Side Door Outside Handle - Right

Pin	Size	Color	Circuit	Function	Terminal Type ID	Option
(1) 1	(1) 0.35	(1) GY / VT	(1) 2676	(1) Right Front Door Exterior Switch Unlock Signal	(1) II	(1) —
2 - 4	—	—	—	Not Occupied	—	—
(5) 5	(5) 0.5	(5) BK / WH	(5) 1251	(5) Signal Ground	(5) I	(5) —

A24RR Rear Side Door Outside Handle - Right

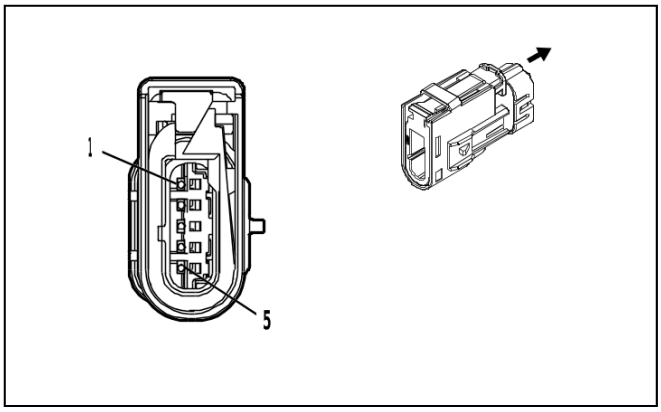

4808325

Connector Part Information

- Harness Type: Rear Side Door Door Wiring Harness - Right
- OEM Connector: SRVWSB-02A-DK
- Service Connector: Service by Harness - See Part Catalog
- Description: 5-Way M 1.2 Series, Sealed(BK)

Terminal Part Information

Terminal Type ID	Terminated Lead	Diagnostic Test Probe	Terminal Removal Tool
I	Not required	J-35616-13 (BU)	No Tool Required
II	Not required	J-35616-17 (L-GN)	No Tool Required

A24RR Rear Side Door Outside Handle - Right

Pin	Size	Color	Circuit	Function	Terminal Type ID	Option
(1) 1	(1) 0.35	(1) GY / BU	(1) 4995	(1) Right Rear Door Exterior Switch Unlock Signal	(1) II	(1) —
2 - 4	—	—	—	Not Occupied	—	—
(5) 5	(5) 0.75	(5) BK	(5) 1250	(5) Ground	(5) I	(5) —

A26 Heater and Air Conditioning User Interface Control - Front

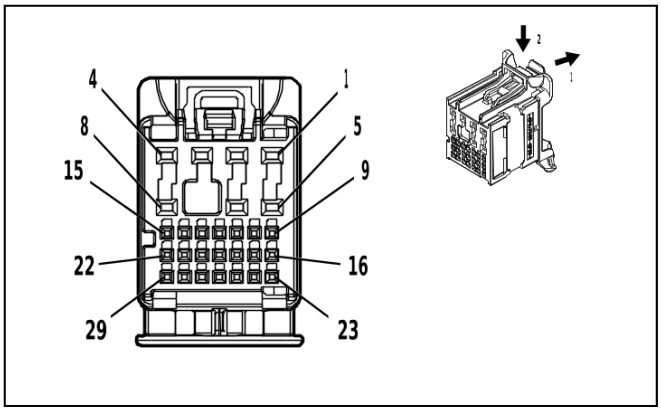

4584346

Connector Part Information

- Harness Type: Instrument Panel Wiring Harness
- OEM Connector: 160014-0012
- Service Connector: 13534972
- Description: 29-Way F 0.5 NANO, 1.2 MCON Series(GN)

Terminal Part Information

Terminal Type ID	Terminated Lead	Diagnostic Test Probe	Terminal Removal Tool
I	19370262	EL-35616-58 (BK)	EL-38125-58
II	84729890	J-35616-12 (BU)	J-38125-215A

A26 Heater and Air Conditioning User Interface Control - Front

Pin	Size	Color	Circuit	Function	Terminal Type ID	Option
(1) 1	(1) 0.5	(1) VT / YE	(1) 11748	(1) HVAC Indicator Supply Voltage	(1) II	(1) —
(2) 2	(2) 0.5	(2) BK / WH	(2) 1851	(2) Signal Ground	(2) II	(2) —
(3) 3	(3) 0.5	(3) GN / BU	(3) 11762	(3) HVAC Temperature 1 Encoder Phase A Signal	(3) II	(3) —
(4) 4	(4) 0.5	(4) YE / WH	(4) 11763	(4) HVAC Temperature 1 Encoder Phase B Signal	(4) II	(4) —
(5) 5	(5) 0.5	(5) BU / GY	(5) 11766	(5) HVAC Temperature 2 Encoder Phase A Signal	(5) II	(5) —
(6) 6	(6) 0.5	(6) GY / WH	(6) 11767	(6) HVAC Temperature 2 Encoder Phase B Signal	(6) II	(6) —
7	—	—	—	Not Occupied	—	—
(8) 8	(8) 0.35	(8) GY / GN	(8) 4636	(8) HVAC System Enable Signal	(8) II	(8) —
(9) 9	(9) 0.35	(9) YE	(9) 11737	(9) Front Defrost Switch Signal	(9) I	(9) —
(10) 10	(10) 0.35	(10) BU / WH	(10) 292	(10) Rear Defogger Switch Signal	(10) I	(10) —
(11) 11	(11) 0.35	(11) VT	(11) 11738	(11) HVAC Fan Up Switch Signal	(11) I	(11) —
(12) 12	(12) 0.35	(12) GY	(12) 11744	(12) HVAC Fan Down Switch Signal	(12) I	(12) —
(13) 13	(13) 0.35	(13) GN	(13) 11745	(13) HVAC Auto Mode Switch Signal	(13) I	(13) —

Pin	Size	Color	Circuit	Function	Terminal Type ID	Option
(14) 14	(14) 0.35	(14) GN / YE	(14) 11757	(14) HVAC White Backlighting Intensity Control	(14) I	(14) —
(15) 15	(15) 0.35	(15) GN / BN	(15) 11758	(15) HVAC Red Backlighting Intensity Control	(15) I	(15) —
(16) 16	(16) 0.35	(16) GN / WH	(16) 11759	(16) HVAC Blue Backlighting Intensity Control	(16) I	(16) —
(17) 17	(17) 0.35	(17) GY / VT	(17) 11760	(17) HVAC Amber Backlighting Intensity Control	(17) I	(17) —
(18) 18	(18) 0.35	(18) BN / WH	(18) 11761	(18) HVAC White Fan Backlighting Intensity Control	(18) I	(18) —
(19) 19	(19) 0.35	(19) BK / YE	(19) 1704	(19) Sensor Low Reference	(19) I	(19) —
(20) 20	(20) 0.35	(20) WH / BK	(20) 1923	(20) Auxiliary HVAC Switch Signal	(20) I	(20) —
(21) 21	(21) 0.35	(21) BN / GN	(21) 11754	(21) HVAC Auto Mode Indicator Control	(21) I	(21) —
(22) 22	(22) 0.35	(22) GN / GY	(22) 11749	(22) HVAC System Enable Indicator Control	(22) I	(22) —
(23) 23	(23) 0.35	(23) BU / VT	(23) 11752	(23) Front Defrost Indicator Control	(23) I	(23) —
(24) 24	(24) 0.35	(24) YE / VT	(24) 11753	(24) Rear Defog Indicator Control	(24) I	(24) —
(25) 25	(25) 0.35	(25) GN / VT	(25) 11755	(25) HVAC Air Conditioning Request Indicator Control	(25) I	(25) —
(26) 26	(26) 0.35	(26) BN / BU	(26) 11756	(26) HVAC Heat Request Indicator Control	(26) I	(26) —
(27) 27	(27) 0.35	(27) BN	(27) 11746	(27) HVAC Air Conditioning Request Switch Signal	(27) I	(27) —
(28) 28	(28) 0.35	(28) BU / BN	(28) 11747	(28) HVAC Heat Request Switch Signal	(28) I	(28) —
29	—	—	—	Not Occupied	—	—

A34 Heater and Air Conditioning Auxiliary Control (- (5W4 / 9C1 / AZ3))

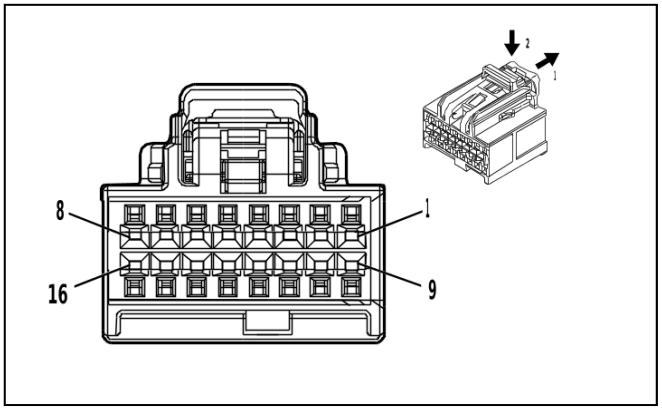

4873243

Connector Part Information

- Harness Type: Front Floor Console Wiring Harness
- OEM Connector: 35016343
- Service Connector: Service by Harness - See Part Catalog
- Description: 16-Way F 0.64 OCS Series(BK)

Terminal Part Information

Terminal Type ID	Terminated Lead	Diagnostic Test Probe	Terminal Removal Tool
I	Not required	J-35616-12 (BU)	No Tool Required
II	Not required	J-35616-64B (L-BU)	No Tool Required

A34 Heater and Air Conditioning Auxiliary Control (- (5W4 / 9C1 / AZ3))

Pin	Size	Color	Circuit	Function	Terminal Type ID	Option
1 - 6	—	—	—	Not Occupied	—	—
(7) 7	(7) 0.5	(7) GN / BK	(7) 2211	(7) Rear Blower Motor Speed Control	(7) II	(7) —
(8) 8	(8) 0.35	(8) BU / YE	(8) 4984	(8) AUTOSAR CAN Bus [-] 5 Serial Data	(8) I	(8) —
(9) 9	(9) 0.35	(9) BU / WH	(9) 4985	(9) AUTOSAR CAN Bus [+] 5 Serial Data	(9) I	(9) —
(10) 10	(10) 0.5	(10) RD / BN	(10) 7540	(10) Battery Positive Voltage	(10) II	(10) —
(11) 11	(11) 0.5	(11) BK / WH	(11) 1451	(11) Signal Ground	(11) II	(11) —
(12) 12	(12) 0.35	(12) BU / YE	(12) 4984	(12) AUTOSAR CAN Bus [-] 5 Serial Data	(12) I	(12) —
(13) 13	(13) 0.35	(13) BU / WH	(13) 4985	(13) AUTOSAR CAN Bus [+] 5 Serial Data	(13) I	(13) —
14	—	—	—	Not Occupied	—	—
(15) 15	(15) 0.35	(15) BU / YE	(15) 4984	(15) AUTOSAR CAN Bus [-] 5 Serial Data	(15) I	(15) —
(16) 16	(16) 0.35	(16) BU / WH	(16) 4985	(16) AUTOSAR CAN Bus [+] 5 Serial Data	(16) I	(16) —

A34 Heater and Air Conditioning Auxiliary Control (5W4 / 9C1)

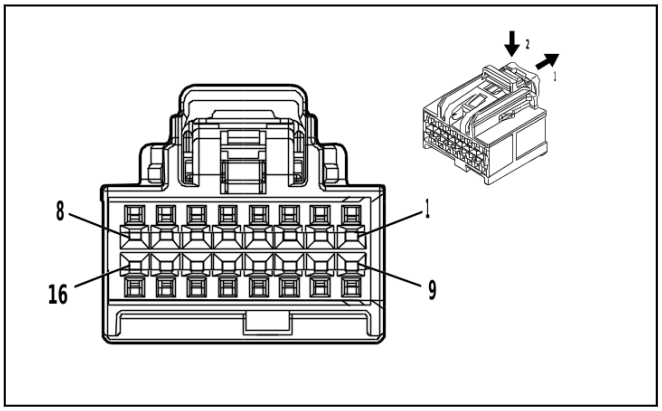

4873243

Connector Part Information

- Harness Type: Body Wiring Harness
- OEM Connector: 35016343
- Service Connector: 13519738
- Description: 16-Way F 0.64 OCS Series(BK)

Terminal Part Information

Terminal Type ID	Terminated Lead	Diagnostic Test Probe	Terminal Removal Tool
I	19354230	J-35616-64B (L-BU)	J-38125-215A

A34 Heater and Air Conditioning Auxiliary Control (5W4 / 9C1)

Pin	Size	Color	Circuit	Function	Terminal Type ID	Option
1 - 6	—	—	—	Not Occupied	—	—
(7) 7	(7) 0.5	(7) GN / BK	(7) 2211	(7) Rear Blower Motor Speed Control	(7) I	(7) —
(8) 8	(8) 0.35	(8) BU / YE	(8) 4984	(8) AUTOSAR CAN Bus [-] 5 Serial Data	(8) I	(8) —
(9) 9	(9) 0.35	(9) BU / WH	(9) 4985	(9) AUTOSAR CAN Bus [+] 5 Serial Data	(9) I	(9) —
(10) 10	(10) 0.75	(10) RD / BN	(10) 7540	(10) Battery Positive Voltage	(10) I	(10) —
(11) 11	(11) 0.5	(11) BK / WH	(11) 1351	(11) Signal Ground	(11) I	(11) —
(12) 12	(12) 0.35	(12) BU / YE	(12) 4984	(12) AUTOSAR CAN Bus [-] 5 Serial Data	(12) I	(12) —
(13) 13	(13) 0.35	(13) BU / WH	(13) 4985	(13) AUTOSAR CAN Bus [+] 5 Serial Data	(13) I	(13) —
14	—	—	—	Not Occupied	—	—
(15) 15	(15) 0.35	(15) BU / YE	(15) 4984	(15) AUTOSAR CAN Bus [-] 5 Serial Data	(15) I	(15) —
(16) 16	(16) 0.35	(16) BU / WH	(16) 4985	(16) AUTOSAR CAN Bus [+] 5 Serial Data	(16) I	(16) —

A34 Heater and Air Conditioning Auxiliary Control (AZ3)

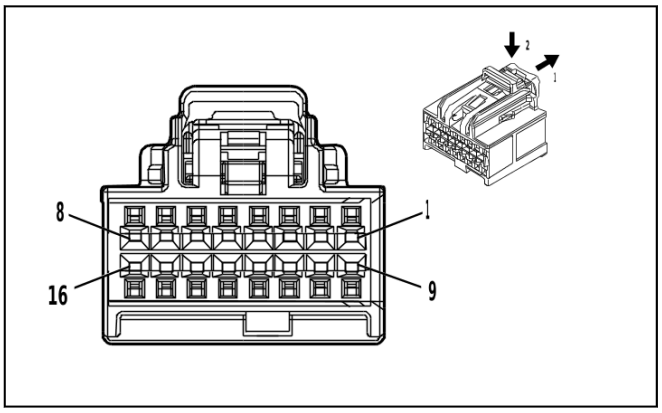

4873243

Connector Part Information

- Harness Type: Front Seat Wiring Harness - Center
- OEM Connector: 35016343
- Service Connector: Service by Harness - See Part Catalog
- Description: 16-Way F 0.64 OCS Series(BK)

Terminal Part Information

Terminal Type ID	Terminated Lead	Diagnostic Test Probe	Terminal Removal Tool
I	Not required	J-35616-64B (L-BU)	No Tool Required

A34 Heater and Air Conditioning Auxiliary Control (AZ3)

Pin	Size	Color	Circuit	Function	Terminal Type ID	Option
1 - 6	—	—	—	Not Occupied	—	—
(7) 7	(7) 0.5	(7) GN / BK	(7) 2211	(7) Rear Blower Motor Speed Control	(7) I	(7) —
(8) 8	(8) 0.35	(8) BU / YE	(8) 4984	(8) AUTOSAR CAN Bus [-] 5 Serial Data	(8) I	(8) —
(9) 9	(9) 0.35	(9) BU / WH	(9) 4985	(9) AUTOSAR CAN Bus [+] 5 Serial Data	(9) I	(9) —
(10) 10	(10) 0.5	(10) RD / BN	(10) 7540	(10) Battery Positive Voltage	(10) I	(10) —
(11) 11	(11) 0.5	(11) BK / WH	(11) 1451	(11) Signal Ground	(11) I	(11) —
(12) 12	(12) 0.35	(12) BU / YE	(12) 4984	(12) AUTOSAR CAN Bus [-] 5 Serial Data	(12) I	(12) —
(13) 13	(13) 0.35	(13) BU / WH	(13) 4985	(13) AUTOSAR CAN Bus [+] 5 Serial Data	(13) I	(13) —
14	—	—	—	Not Occupied	—	—
(15) 15	(15) 0.35	(15) BU / YE	(15) 4984	(15) AUTOSAR CAN Bus [-] 5 Serial Data	(15) I	(15) —
(16) 16	(16) 0.35	(16) BU / WH	(16) 4985	(16) AUTOSAR CAN Bus [+] 5 Serial Data	(16) I	(16) —

A38 Reductant Tank Fluid Supply Pump Module (LZ0)

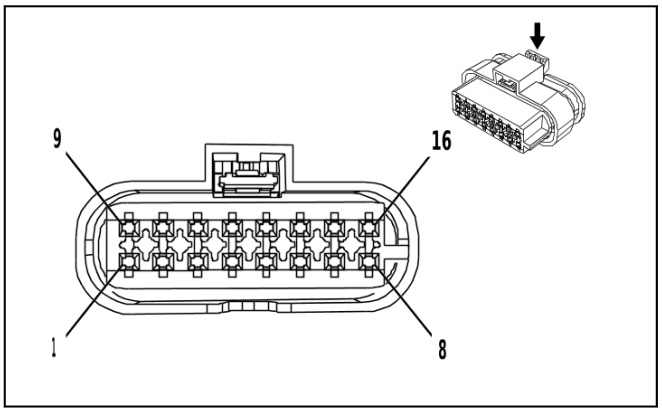

4259227

Connector Part Information

- Harness Type: Emission Reduction Fluid Tank Reservoir Wire Harness
- OEM Connector: 33210848
- Service Connector: Service by Harness - See Part Catalog
- Description: 16-Way F 1.2 MLK Series, Sealed(BK)

Terminal Part Information

Terminal Type ID	Terminated Lead	Diagnostic Test Probe	Terminal Removal Tool
I	Not required	No Tool Required	No Tool Required

A38 Reductant Tank Fluid Supply Pump Module (LZ0)

Pin	Size	Color	Circuit	Function	Terminal Type ID	Option
(1) 1	(1) —	(1) BK	(1) 3244	(1) Diesel Exhaust Fluid Tank Temperature Sensor Signal	(1) I	(1) —
(2) 2	(2) —	(2) BN	(2) 3245	(2) Diesel Exhaust Fluid Tank Temperature Sensor Low Reference	(2) I	(2) —
(3) 3	(3) —	(3) BU	(3) 3107	(3) Diesel Exhaust Fluid Pressure Sensor Low Reference	(3) I	(3) —
(4) 4	(4) —	(4) BU	(4) 3108	(4) Diesel Exhaust Fluid Pressure Sensor Signal	(4) I	(4) —
(5) 5	(5) —	(5) BN	(5) 3106	(5) Diesel Exhaust Fluid Pressure Sensor 5 Volt Reference	(5) I	(5) —
(6) 6	(6) —	(6) BU	(6) 4318	(6) Diesel Exhaust Fluid Tank Heater Low Control	(6) I	(6) —
(7) 7	(7) —	(7) WH	(7) 3103	(7) Diesel Exhaust Fluid Smart Pump Control	(7) I	(7) —
(8) 8	(8) —	(8) BN	(8) 3875	(8) Diesel Exhaust Fluid Smart Pump Supply Voltage Phase 2	(8) I	(8) —
(9) 9	(9) —	(9) YE	(9) 3677	(9) Diesel Exhaust Fluid Reservoir Heater Control	(9) I	(9) —
10 - 11	—	—	—	Not Occupied	—	—
(12) 12	(12) —	(12) BN	(12) 3676	(12) Diesel Exhaust Fluid Heating Tank 2 Heater Control	(12) I	(12) —
13	—	—	—	Not Occupied	—	—
(14) 14	(14) —	(14) BU	(14) 2937	(14) Diesel Exhaust Fluid Pump Motor Stator Low Reference	(14) I	(14) —
(15) 15	(15) —	(15) YE	(15) 3876	(15) Diesel Exhaust Fluid Smart Pump Supply Voltage Phase 3	(15) I	(15) —
(16) 16	(16) —	(16) BN	(16) 2936	(16) Diesel Exhaust Fluid Heating Tank 2 Heater Control Low	(16) I	(16) —

A103 Roof Console

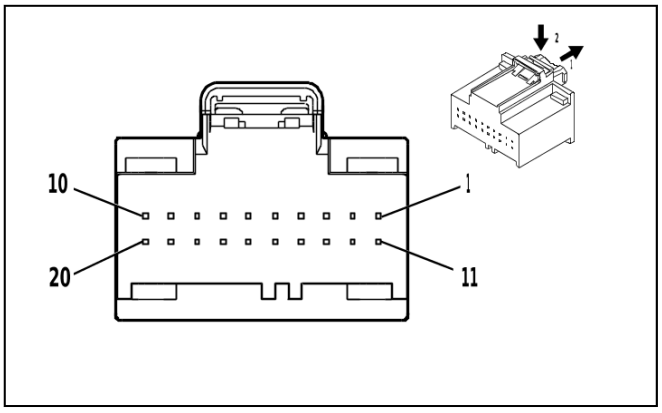

5112891

Connector Part Information

- Harness Type: Headlining Trim Panel Harness
- OEM Connector: 31410-0205
- Service Connector: 13525990
- Description: 20-Way F 0.64 Series(BK)

Terminal Part Information

Terminal Type ID	Terminated Lead	Diagnostic Test Probe	Terminal Removal Tool
I	13584547	J-35616-64B (L-BU)	J-38125-215A

A103 Roof Console

Pin	Size	Color	Circuit	Function	Terminal Type ID	Option
(1) 1	(1) 0.5	(1) RD / YE	(1) 240	(1) Battery Positive Voltage	(1) I	(1) —
(2) 2	(2) 0.5	(2) BU / GN	(2) 4785	(2) Interior Lamp Overhead Enable Signal	(2) I	(2) —
(3) 3	(3) 0.5	(3) GY / WH	(3) 2369	(3) Interior Lamp Overhead 2 Enable Signal	(3) I	(3) —
(4) 4	(4) 0.35	(4) GN / YE	(4) 2903	(4) Row 2 Dome Reading Lamp Interior Lamp Control	(4) I	(4) —
(5) 5	(5) 0.35	(5) BN / BU	(5) 2905	(5) Row 2 Dome Reading Lamp 2 Interior Lamp Control	(5) I	(5) —
(6) 6	(6) 0.35	(6) WH / BN	(6) 2904	(6) Row 2 Dome Reading Lamp Switch Signal	(6) I	(6) —
(7) 7	(7) 0.35	(7) VT / GY	(7) 2906	(7) Row 2 Dome Reading Lamp 2 Switch Signal	(7) I	(7) —
(8) 8	(8) 0.35	(8) VT / YE	(8) 2908	(8) Row 3 Dome Reading Lamp Switch Signal	(8) I	(8) —
(9) 9	(9) 0.35	(9) YE / GY	(9) 2910	(9) Row 3 Dome Reading Lamp 2 Switch Signal	(9) I	(9) —
(10) 10	(10) 0.35	(10) GN / WH	(10) 2854	(10) Body Control Module LIN Bus 8	(10) I	(10) —
(11) 11	(11) 0.35	(11) BU / WH	(11) 2907	(11) Row 3 Dome Reading Lamp Interior Lamp Control	(11) I	(11) —
(12) 12	(12) 0.35	(12) BN / VT	(12) 2909	(12) Row 3 Dome Reading Lamp 2 Interior Lamp Control	(12) I	(12) —
(13) 13	(13) 0.5	(13) BK / BN	(13) 654	(13) Cellular Telephone Microphone Low Reference	(13) I	(13) —
(14) 14	(14) 0.5	(14) BU	(14) 655	(14) Cellular Telephone Microphone Signal	(14) I	(14) —
(15) 15	(15) 0.35	(15) GN / BK	(15) 2515	(15) Telematics Switch Supply Voltage	(15) I	(15) —
(16) 16	(16) 0.35	(16) GN / WH	(16) 2514	(16) Telematics Switch Signal	(16) I	(16) —
(17) 17	(17) 0.35	(17) YE / VT	(17) 2516	(17) Telematics Switch Green LED Indicator Control	(17) I	(17) —
(18) 18	(18) 0.35	(18) BN / WH	(18) 2517	(18) Telematics Switch Red LED Indicator Control	(18) I	(18) —
(19) 19	(19) 0.35	(19) GN / BK	(19) 10652	(19) Radio LIN Bus 1	(19) I	(19) —
(20) 20	(20) 0.35	(20) BK	(20) 1850	(20) Ground	(20) I	(20) —

B1 Air Conditioning Refrigerant Pressure Sensor

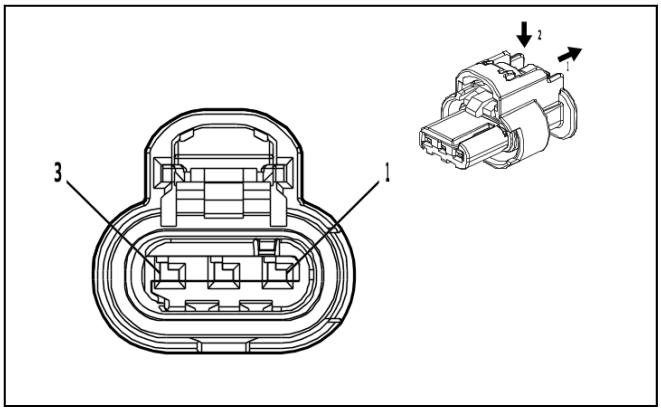

4581126

Connector Part Information

- Harness Type: Engine Wiring Harness
- OEM Connector: 1-2296695-1
- Service Connector: 86792094
- Description: 3-Way F 1.2 MCON-CB Series, Sealed(BK)

Terminal Part Information

Terminal Type ID	Terminated Lead	Diagnostic Test Probe	Terminal Removal Tool
I	Not required	J-35616-12 (BU)	No Tool Required

B1 Air Conditioning Refrigerant Pressure Sensor

Pin	Size	Color	Circuit	Function	Terminal Type ID	Option
(1) 1	(1) 0.5	(1) WH / RD	(1) 480	(1) Engine Control Vehicle Sensors 5 Volt Reference 1	(1) I	(1) —
(2) 2	(2) 0.5	(2) GN	(2) 380	(2) Air Conditioning Refrigerant Pressure Sensor Signal	(2) I	(2) —
(3) 3	(3) 0.5	(3) BK / GY	(3) 626	(3) Engine Control Vehicle Sensors Low Reference 1	(3) I	(3) —

B5LF Front Wheel Speed Sensor - Left

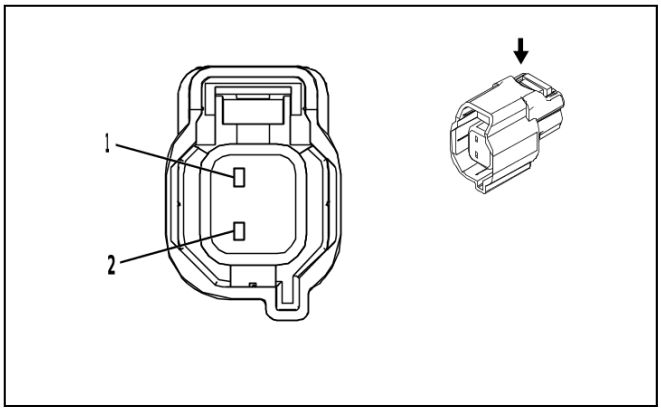

2900396

Connector Part Information
- Harness Type: Chassis Wiring Harness
- OEM Connector: 34062-0026
- Service Connector: 19366856
- Description: 2-Way F 1.5 Series, Sealed(L-GY)

Terminal Part Information

Terminal Type ID	Terminated Lead	Diagnostic Test Probe	Terminal Removal Tool
I	Not required	J-35616-14 (GN)	No Tool Required

B5LF Front Wheel Speed Sensor - Left

Pin	Size	Color	Circuit	Function	Terminal Type ID	Option
(1) 1	(1) 0.5	(1) GY / WH	(1) 7064	(1) Left Front Wheel Speed Sensor Control	(1) I	(1) —
(2) 2	(2) 0.5	(2) GY	(2) 830	(2) Left Front Wheel Speed Sensor Signal	(2) I	(2) —

B5LR Rear Wheel Speed Sensor - Left

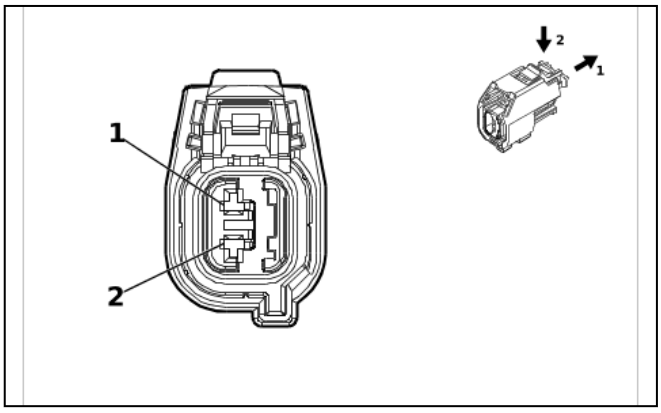

5666214

Connector Part Information
- Harness Type: Chassis Wiring Harness
- OEM Connector: 33189092
- Service Connector: 85526683
- Description: 2-Way F 1.5 OCS Series, Sealed(GY)

Terminal Part Information

Terminal Type ID	Terminated Lead	Diagnostic Test Probe	Terminal Removal Tool
I	Not required	J-35616-2A (GY)	No Tool Required

B5LR Rear Wheel Speed Sensor - Left

Pin	Size	Color	Circuit	Function	Terminal Type ID	Option
(1) 1	(1) 0.5	(1) GY / BK	(1) 7127	(1) Left Rear Wheel Speed Sensor Control	(1) I	(1) —
(2) 2	(2) 0.5	(2) BU	(2) 884	(2) Left Rear Wheel Speed Sensor Signal	(2) I	(2) —

B5RF Front Wheel Speed Sensor - Right

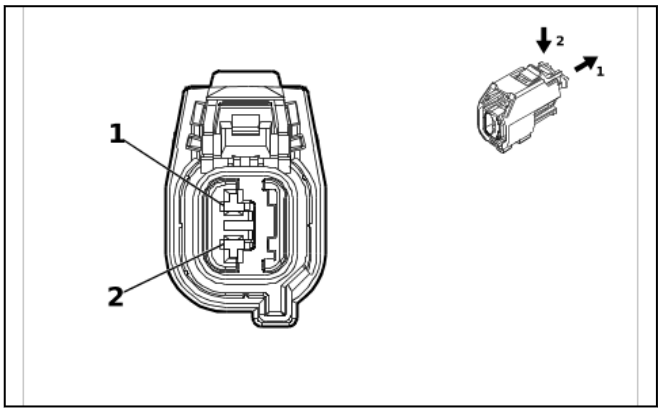

5666214

Connector Part Information

- Harness Type: Chassis Wiring Harness
- OEM Connector: 33189092
- Service Connector: 85526683
- Description: 2-Way F 1.5 OCS Series, Sealed(GY)

Terminal Part Information

Terminal Type ID	Terminated Lead	Diagnostic Test Probe	Terminal Removal Tool
I	Not required	J-35616-2A (GY)	No Tool Required

B5RF Front Wheel Speed Sensor - Right

Pin	Size	Color	Circuit	Function	Terminal Type ID	Option
(1) 1	(1) 0.5	(1) GY / BN	(1) 7065	(1) Right Front Wheel Speed Sensor Control	(1) I	(1) —
(2) 2	(2) 0.5	(2) YE	(2) 872	(2) Right Front Wheel Speed Sensor Signal	(2) I	(2) —

B5RR Rear Wheel Speed Sensor - Right

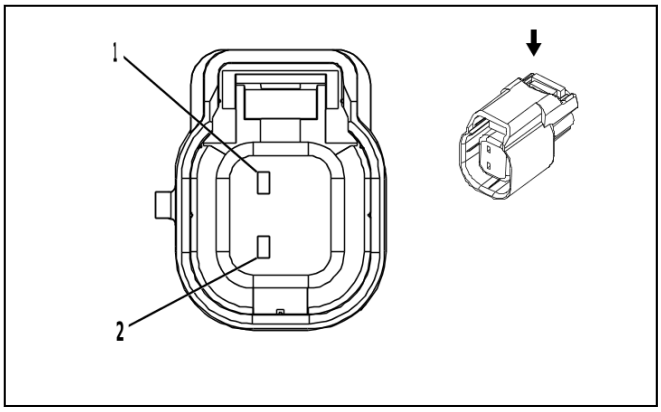

4115616

Connector Part Information
- Harness Type: Chassis Wiring Harness
- OEM Connector: 34062-0046
- Service Connector: 19366860
- Description: 2-Way F 1.5 Series, Sealed(BK)

Terminal Part Information

Terminal Type ID	Terminated Lead	Diagnostic Test Probe	Terminal Removal Tool
I	Not required	J-35616-14 (GN)	No Tool Required

B5RR Rear Wheel Speed Sensor - Right

Pin	Size	Color	Circuit	Function	Terminal Type ID	Option
(1) 1	(1) 0.5	(1) GY / YE	(1) 7128	(1) Right Rear Wheel Speed Sensor Control	(1) I	(1) —
(2) 2	(2) 0.5	(2) VT	(2) 882	(2) Right Rear Wheel Speed Sensor Signal	(2) I	(2) —

B9 Ambient Air Temperature Sensor

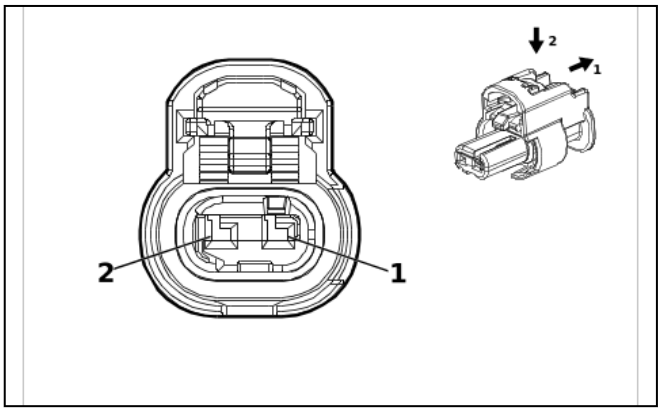

4649903

Connector Part Information
- Harness Type: Air Shutter Jumper
- OEM Connector: Not Available
- Service Connector: Service by Harness - See Part Catalog
- Description: 2-Way

Terminal Part Information

Terminal Type ID	Terminated Lead	Diagnostic Test Probe	Terminal Removal Tool
I	Not required	No Tool Required	No Tool Required

B9 Ambient Air Temperature Sensor

Pin	Size	Color	Circuit	Function	Terminal Type ID	Option
(1) 1	(1) 0.5	(1) BK / GY	(1) 626	(1) Engine Control Vehicle Sensors Low Reference 1	(1) I	(1) —
(2) 2	(2) 0.5	(2) BU / GY	(2) 636	(2) Ambient Air Temperature Sensor Signal	(2) I	(2) —

B10D Sun Load and Ambient Light and Security Indicator Sensor

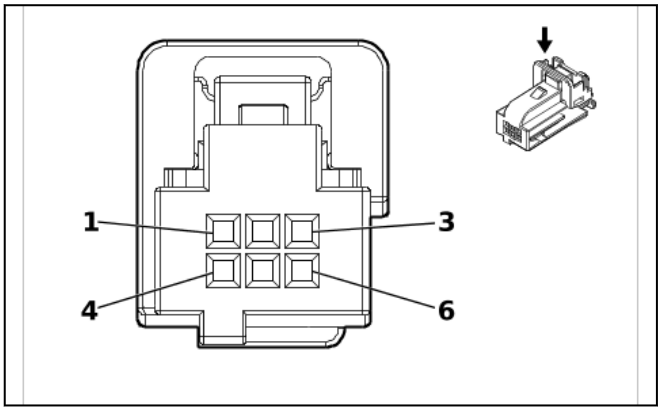

2282896

Connector Part Information

- Harness Type: Instrument Panel Wiring Harness
- OEM Connector: 13518220
- Service Connector: 85587649
- Description: 6-Way F 0.64 Micro-Quadlock Series(BK)

Terminal Part Information

Terminal Type ID	Terminated Lead	Diagnostic Test Probe	Terminal Removal Tool
I	Not required	J-35616-64B (L-BU)	No Tool Required

B10D Sun Load and Ambient Light and Security Indicator Sensor

Pin	Size	Color	Circuit	Function	Terminal Type ID	Option
(1) 1	(1) 0.35	(1) GY	(1) 590	(1) Driver Solar Sensor Signal	(1) I	(1) —
2	—	—	—	Not Occupied	—	—
(3) 3	(3) 0.35	(3) WH / BU	(3) 278	(3) Ambient Light Sensor Signal	(3) I	(3) —
(4) 4	(4) 0.35	(4) BU / WH	(4) 734	(4) Inside Air Temperature Sensor Signal	(4) I	(4) —
5	—	—	—	Not Occupied	—	—
(6) 6	(6) 0.35	(6) BK / YE	(6) 407	(6) Sensor Low Reference	(6) I	(6) —

B11LF Front Suspension 4 Corner Leveling System Position Sensor - Left (F47)

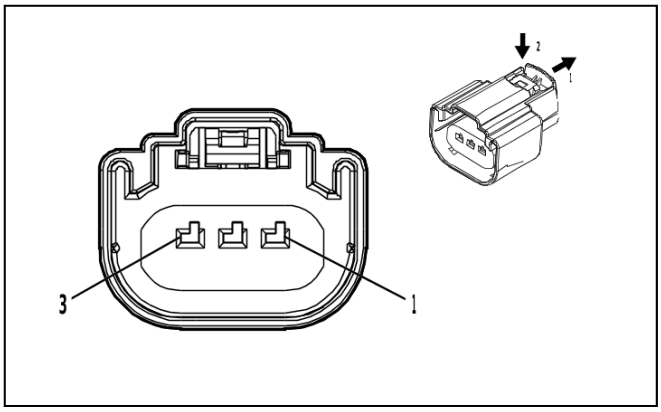

4569745

Connector Part Information

- Harness Type: Chassis Wiring Harness
- OEM Connector: 160073-3105
- Service Connector: 19179750
- Description: 3-Way F 1.5 MX Series, Sealed(BK)

Terminal Part Information

Terminal Type ID	Terminated Lead	Diagnostic Test Probe	Terminal Removal Tool
I	Not required	J-35616-14 (GN)	No Tool Required

B11LF Front Suspension 4 Corner Leveling System Position Sensor - Left (F47)

Pin	Size	Color	Circuit	Function	Terminal Type ID	Option
(1) 1	(1) 0.5	(1) BU / RD	(1) 1205	(1) Left Front Suspension Position Sensor Voltage Reference	(1) I	(1) —
(2) 2	(2) 0.5	(2) BK / BU	(2) 1206	(2) Left Front Suspension Position Sensor Low Reference	(2) I	(2) —
(3) 3	(3) 0.5	(3) BN / WH	(3) 1207	(3) Left Front Suspension Position Sensor Signal	(3) I	(3) —

B11LR Rear Suspension 2 or 4 Corner Air Leveling Position Sensor - Left (F47)

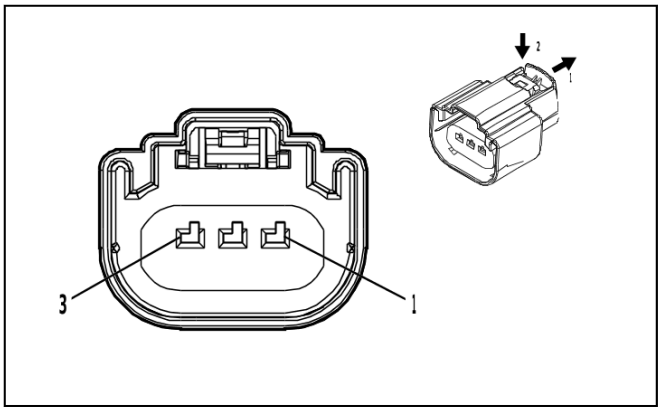

4569745

Connector Part Information

- Harness Type: Chassis Wiring Harness
- OEM Connector: 160073-3105
- Service Connector: 19179750
- Description: 3-Way F 1.5 MX Series, Sealed(BK)

Terminal Part Information

Terminal Type ID	Terminated Lead	Diagnostic Test Probe	Terminal Removal Tool
I	Not required	J-35616-14 (GN)	No Tool Required

B11LR Rear Suspension 2 or 4 Corner Air Leveling Position Sensor - Left (F47)

Pin	Size	Color	Circuit	Function	Terminal Type ID	Option
(1) 1	(1) 0.5	(1) YE / RD	(1) 1208	(1) Left Rear Suspension Position Sensor Voltage Reference	(1) I	(1) —
(2) 2	(2) 0.5	(2) BK / GN	(2) 1209	(2) Left Rear Suspension Position Sensor Low Reference	(2) I	(2) —
(3) 3	(3) 0.5	(3) GN / WH	(3) 1210	(3) Left Rear Suspension Position Sensor Signal	(3) I	(3) —

B11RF Front Suspension 4 Corner Leveling System Position Sensor - Right (F47)

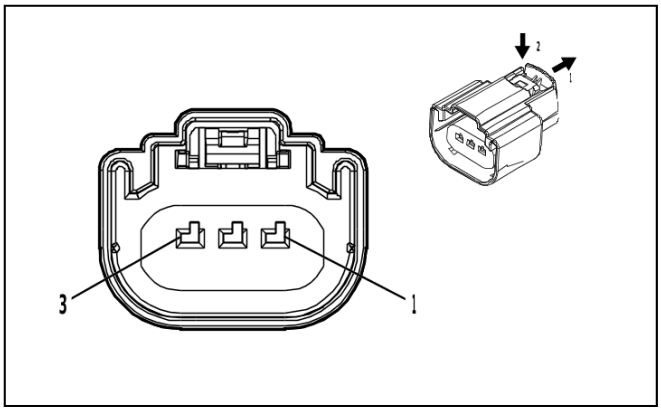

4569745

Connector Part Information

- Harness Type: Chassis Wiring Harness
- OEM Connector: 160073-3105
- Service Connector: 19179750
- Description: 3-Way F 1.5 MX Series, Sealed(BK)

Terminal Part Information

Terminal Type ID	Terminated Lead	Diagnostic Test Probe	Terminal Removal Tool
I	Not required	J-35616-14 (GN)	No Tool Required

B11RF Front Suspension 4 Corner Leveling System Position Sensor - Right (F47)

Pin	Size	Color	Circuit	Function	Terminal Type ID	Option
(1) 1	(1) 0.5	(1) BN / RD	(1) 1211	(1) Right Front Suspension Position Sensor Voltage Reference	(1) I	(1) —
(2) 2	(2) 0.5	(2) BK / GY	(2) 1212	(2) Right Front Suspension Position Sensor Low Reference	(2) I	(2) —
(3) 3	(3) 0.5	(3) YE / WH	(3) 1213	(3) Right Front Suspension Position Sensor Signal	(3) I	(3) —

B11RR Rear Suspension 2 or 4 Corner Air Leveling Position Sensor - Right (F47)

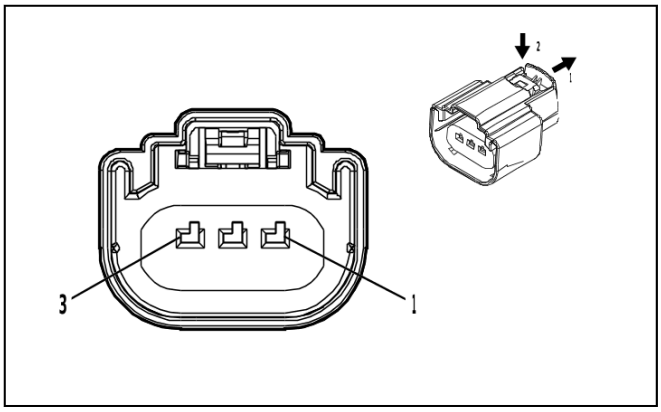

4569745

Connector Part Information

- Harness Type: Chassis Wiring Harness
- OEM Connector: 160073-3105
- Service Connector: 19179750
- Description: 3-Way F 1.5 MX Series, Sealed(BK)

Terminal Part Information

Terminal Type ID	Terminated Lead	Diagnostic Test Probe	Terminal Removal Tool
I	Not required	J-35616-14 (GN)	No Tool Required

B11RR Rear Suspension 2 or 4 Corner Air Leveling Position Sensor - Right (F47)

Pin	Size	Color	Circuit	Function	Terminal Type ID	Option
(1) 1	(1) 0.5	(1) GN / RD	(1) 1214	(1) Right Rear Suspension Position Sensor Voltage Reference	(1) I	(1) —
(2) 2	(2) 0.5	(2) BK / YE	(2) 1215	(2) Right Rear Suspension Position Sensor Low Reference	(2) I	(2) —
(3) 3	(3) 0.5	(3) GN / GY	(3) 1216	(3) Right Rear Suspension Position Sensor Signal	(3) I	(3) —

B13 Automatic Transmission Fluid Temperature Sensor

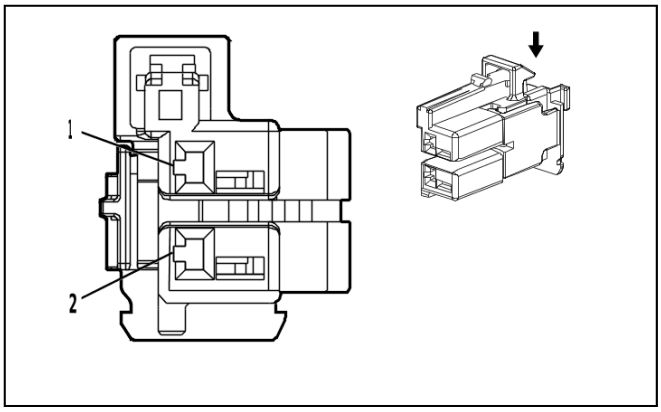

4672650

Connector Part Information
- Harness Type: Automatic Transmission Wiring Harness
- OEM Connector: 13514136
- Service Connector: Service by Harness - See Part Catalog
- Description: 2-Way F 1.2 MCON Series(BN)

Terminal Part Information

Terminal Type ID	Terminated Lead	Diagnostic Test Probe	Terminal Removal Tool
I	Not required	No Tool Required	No Tool Required

B13 Automatic Transmission Fluid Temperature Sensor

Pin	Size	Color	Circuit	Function	Terminal Type ID	Option
(1) 1	(1) 0.5	(1) BU / BN	(1) 586	(1) Transmission Fluid Temperature Sensor Low Reference	(1) I	(1) —
(2) 2	(2) 0.5	(2) BN / YE	(2) 585	(2) Transmission Fluid Temperature Sensor Signal	(2) I	(2) —

B14A Automatic Transmission Output Speed Sensor

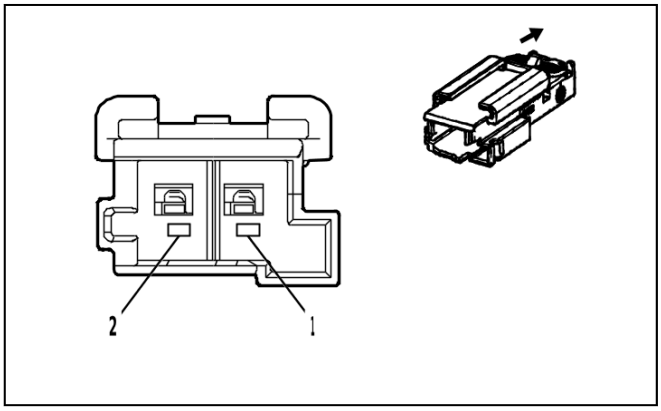

4672593

Connector Part Information
- Harness Type: Automatic Transmission Wiring Harness
- OEM Connector: 2340311-2
- Service Connector: Service by Harness - See Part Catalog
- Description: 2-Way M 1.2 MCON Series(BU)

Terminal Part Information

Terminal Type ID	Terminated Lead	Diagnostic Test Probe	Terminal Removal Tool
I	Not required	J-35616-13 (BU)	No Tool Required

B14A Automatic Transmission Output Speed Sensor

Pin	Size	Color	Circuit	Function	Terminal Type ID	Option
(1) 1	(1) 0.5	(1) YE / OG	(1) 6358	(1) Output Speed Signal	(1) I	(1) —
(2) 2	(2) 0.5	(2) GN	(2) 4170	(2) Transmission Output Shaft Speed Sensor Circuit 9V Reference	(2) I	(2) —

B14C Automatic Transmission Input Speed Sensor

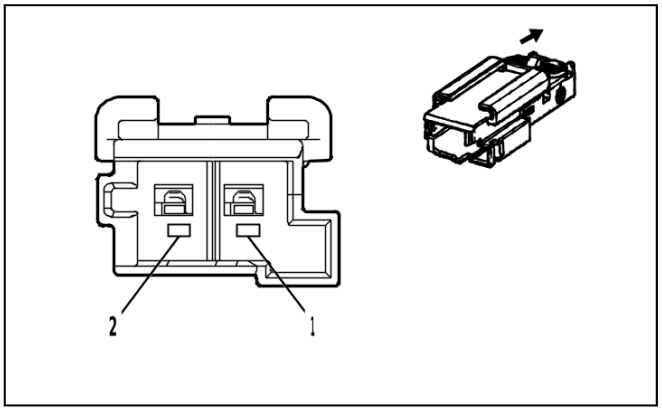

4672611

Connector Part Information

- Harness Type: Automatic Transmission Wiring Harness
- OEM Connector: 2340311-3
- Service Connector: Service by Harness - See Part Catalog
- Description: 2-Way M 1.2 MCON Series(GN)

Terminal Part Information

Terminal Type ID	Terminated Lead	Diagnostic Test Probe	Terminal Removal Tool
I	Not required	J-35616-13 (BU)	No Tool Required

B14C Automatic Transmission Input Speed Sensor

Pin	Size	Color	Circuit	Function	Terminal Type ID	Option
(1) 1	(1) 0.5	(1) WH / VT	(1) 6353	(1) Input Speed Signal	(1) I	(1) —
(2) 2	(2) 0.5	(2) BU	(2) 4171	(2) Transmission Input Shaft Speed Sensor Circuit 9V Reference	(2) I	(2) —

B14DA Automatic Transmission Intermediate Speed Sensor 1

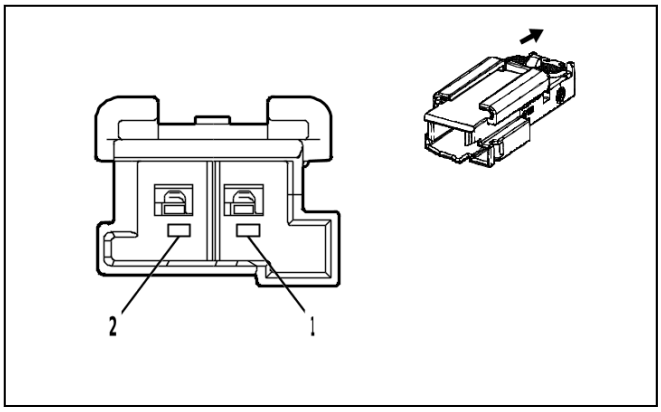

4663490

Connector Part Information
- Harness Type: Automatic Transmission Wiring Harness
- OEM Connector: 2340311-1
- Service Connector: Service by Harness - See Part Catalog
- Description: 2-Way M 1.2 MCON Series(NA)

Terminal Part Information

Terminal Type ID	Terminated Lead	Diagnostic Test Probe	Terminal Removal Tool
I	Not required	J-35616-13 (BU)	No Tool Required

B14DA Automatic Transmission Intermediate Speed Sensor 1

Pin	Size	Color	Circuit	Function	Terminal Type ID	Option
(1) 1	(1) 0.5	(1) VT / GN	(1) 4510	(1) Transmission Intermediate Speed Signal	(1) I	(1) —
(2) 2	(2) 0.5	(2) GN	(2) 4170	(2) Transmission Output Shaft Speed Sensor Circuit 9V Reference	(2) I	(2) —

B14DB Automatic Transmission Intermediate Speed Sensor 2

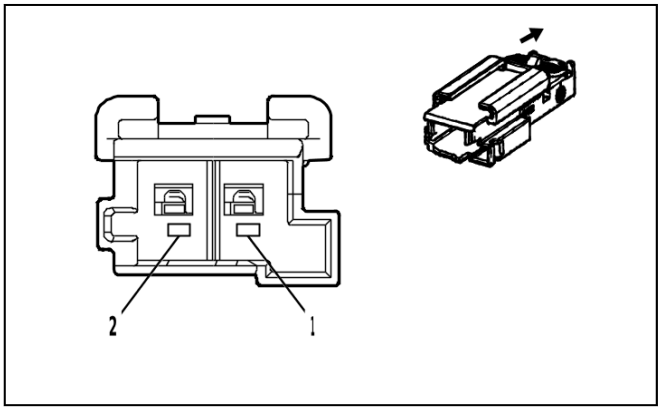

4672593

Connector Part Information
- Harness Type: Automatic Transmission Wiring Harness
- OEM Connector: 2340311-2
- Service Connector: Service by Harness - See Part Catalog
- Description: 2-Way M 1.2 MCON Series(BU)

Terminal Part Information

Terminal Type ID	Terminated Lead	Diagnostic Test Probe	Terminal Removal Tool
I	Not required	J-35616-13 (BU)	No Tool Required

B14DB Automatic Transmission Intermediate Speed Sensor 2

Pin	Size	Color	Circuit	Function	Terminal Type ID	Option
(1) 1	(1) 0.5	(1) WH / BU	(1) 6254	(1) Transmission Input Speed Sensor Signal	(1) I	(1) —
(2) 2	(2) 0.5	(2) BU	(2) 4171	(2) Transmission Input Shaft Speed Sensor Circuit 9V Reference	(2) I	(2) —

B20A Brake Fluid Level Indicator Switch

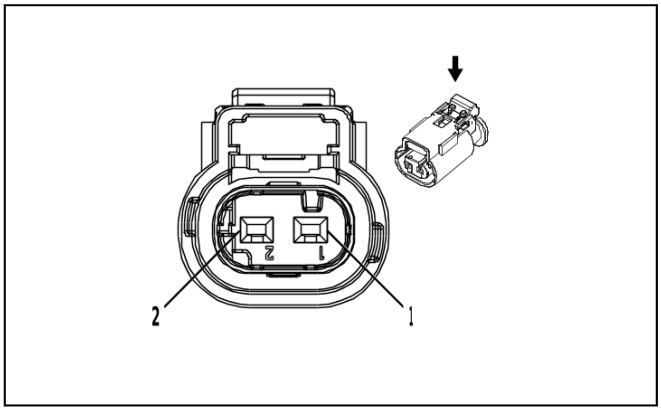

2717066

Connector Part Information

- Harness Type: Body Wiring Harness
- OEM Connector: 10010337
- Service Connector: 13587326
- Description: 2-Way F 1.2 Multilock Series, Sealed(BK)

Terminal Part Information

Terminal Type ID	Terminated Lead	Diagnostic Test Probe	Terminal Removal Tool
I	Not required	J-35616-16 (L-GN)	No Tool Required

B20A Brake Fluid Level Indicator Switch

Pin	Size	Color	Circuit	Function	Terminal Type ID	Option
(1) 1	(1) 0.5	(1) GN / GY	(1) 333	(1) Brake Fluid Level Signal	(1) I	(1) —
(2) 2	(2) 0.5	(2) BK / WH	(2) 1151	(2) Signal Ground	(2) I	(2) —

B22 Brake Pedal Position Sensor

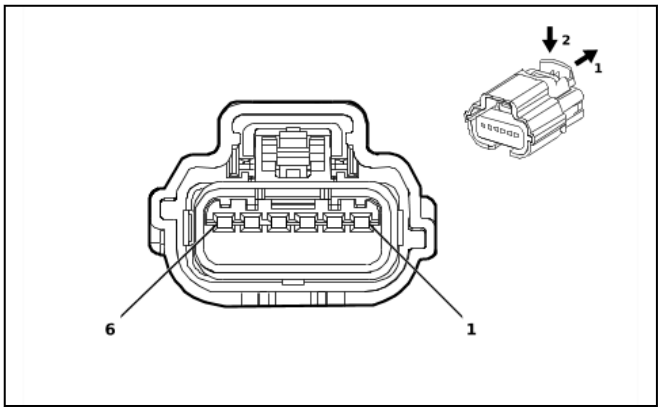

4773396

Connector Part Information

- Harness Type: Body Wiring Harness
- OEM Connector: 31404-7810
- Service Connector: 84683650
- Description: 6-Way F 64 Series, Sealed(NA)

Terminal Part Information

Terminal Type ID	Terminated Lead	Diagnostic Test Probe	Terminal Removal Tool
I	Not required	J-35616-64B (L-BU)	No Tool Required

B22 Brake Pedal Position Sensor

Pin	Size	Color	Circuit	Function	Terminal Type ID	Option
(1) 1	(1) 0.35	(1) BK / BN	(1) 5360	(1) Brake Apply Sensor Low Reference	(1) I	(1) —
(2) 2	(2) 0.35	(2) WH	(2) 5359	(2) Brake Apply Sensor Control	(2) I	(2) —
(3) 3	(3) 0.35	(3) BU / YE	(3) 5361	(3) Brake Apply Sensor Signal	(3) I	(3) —
(4) 4	(4) 0.5	(4) WH / GN	(4) 5380	(4) Brake Position Sensor Signal	(4) I	(4) —
(5) 5	(5) 0.5	(5) BK / GY	(5) 626	(5) Engine Control Vehicle Sensors Low Reference 1	(5) I	(5) —
(6) 6	(6) 0.35	(6) WH / RD	(6) 480	(6) Engine Control Vehicle Sensors 5 Volt Reference 1	(6) I	(6) —

B23 Camshaft Position Sensor (L84 / L87)

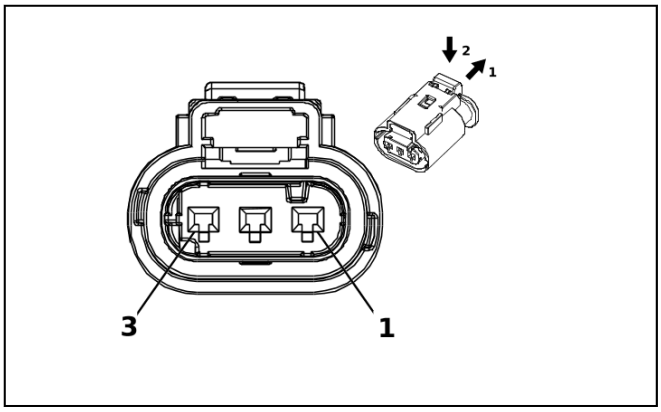

2717069

Connector Part Information

- Harness Type: Camshaft Position Sensor Wire
- OEM Connector: 10010341
- Service Connector: Service by Harness - See Part Catalog
- Description: 3-Way F 1.2 Multilock Series, Sealed(BK)

Terminal Part Information

Terminal Type ID	Terminated Lead	Diagnostic Test Probe	Terminal Removal Tool
I	Not required	J-35616-12 (BU)	No Tool Required

B23 Camshaft Position Sensor (L84 / L87)

Pin	Size	Color	Circuit	Function	Terminal Type ID	Option
(1) 1	(1) 0.5	(1) GY / BU	(1) 5300	(1) Intake Camshaft Position Sensor 1 Voltage Reference	(1) I	(1) —
(2) 2	(2) 0.5	(2) BK / GN	(2) 5301	(2) Intake Camshaft Position Sensor Low Reference 1	(2) I	(2) —
(3) 3	(3) 0.5	(3) YE / VT	(3) 5275	(3) Intake Camshaft Position Sensor 1	(3) I	(3) —

B23E Camshaft Position Sensor - Exhaust (LZ0)

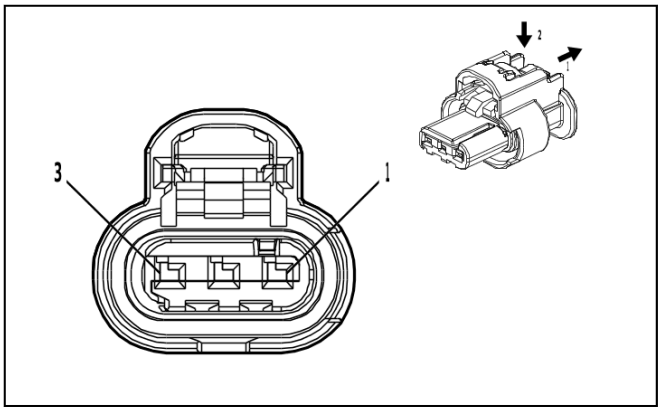

4581126

Connector Part Information
- Harness Type: Engine Wiring Harness
- OEM Connector: 1-2296695-1
- Service Connector: 86792094
- Description: 3-Way F 1.2 MCON-CB Series, Sealed(BK)

Terminal Part Information

Terminal Type ID	Terminated Lead	Diagnostic Test Probe	Terminal Removal Tool
I	Not required	J-35616-16 (L-GN)	No Tool Required

B23E Camshaft Position Sensor - Exhaust (LZ0)

Pin	Size	Color	Circuit	Function	Terminal Type ID	Option
(1) 1	(1) 0.5	(1) GY / YE	(1) 5297	(1) Exhaust Camshaft Position Sensor 1 Voltage Reference	(1) I	(1) —
(2) 2	(2) 0.5	(2) BK / GY	(2) 5296	(2) Exhaust Camshaft Position Sensor Low Reference 1	(2) I	(2) —
(3) 3	(3) 0.5	(3) VT / BK	(3) 5273	(3) Exhaust Camshaft Position Sensor 1	(3) I	(3) —

B24 Mobile Telephone Microphone

—

Connector Part Information
- Harness Type: Roof Console
- OEM Connector: Not Available
- Service Connector: Service by Harness - See Part Catalog
- Description: 2-Way

Terminal Part Information

Terminal Type ID	Terminated Lead	Diagnostic Test Probe	Terminal Removal Tool
I	Not required	No Tool Required	No Tool Required

B24 Mobile Telephone Microphone

Pin	Size	Color	Circuit	Function	Terminal Type ID	Option
A	—	BK / BN	654	Cellular Telephone Microphone Low Reference	I	—
B	—	BU	655	Cellular Telephone Microphone Signal	I	—

B26 Crankshaft Position Sensor (L84 / L87)

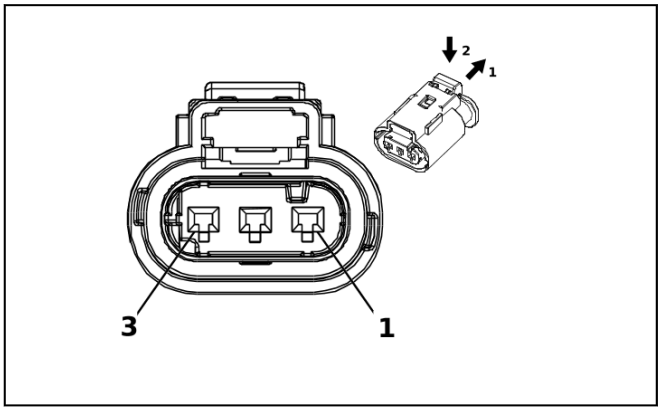

2717069

Connector Part Information

- Harness Type: Engine Wiring Harness
- OEM Connector: 10010341
- Service Connector: 84601390
- Description: 3-Way F 1.2 Multilock Series, Sealed(BK)

Terminal Part Information

Terminal Type ID	Terminated Lead	Diagnostic Test Probe	Terminal Removal Tool
I	Not required	J-35616-16 (L-GN)	No Tool Required

B26 Crankshaft Position Sensor (L84 / L87)

Pin	Size	Color	Circuit	Function	Terminal Type ID	Option
(1) 1	(1) 0.5	(1) GN	(1) 6271	(1) Crankshaft Position Sensor Signal	(1) I	(1) —
(2) 2	(2) 0.5	(2) BK / VT	(2) 6272	(2) Crankshaft Position Sensor Low Reference	(2) I	(2) —
(3) 3	(3) 0.5	(3) VT / BU	(3) 6270	(3) Crankshaft Position Sensor Voltage	(3) I	(3) —

B26 Crankshaft Position Sensor (LZ0)

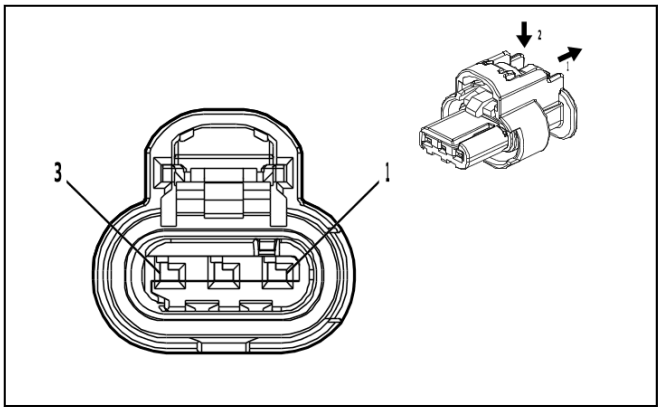

4581126

Connector Part Information
- Harness Type: Engine Wiring Harness
- OEM Connector: 1-2296695-1
- Service Connector: 86792094
- Description: 3-Way F 1.2 MCON-CB Series, Sealed(BK)

Terminal Part Information

Terminal Type ID	Terminated Lead	Diagnostic Test Probe	Terminal Removal Tool
I	Not required	J-35616-16 (L-GN)	No Tool Required

B26 Crankshaft Position Sensor (LZ0)

Pin	Size	Color	Circuit	Function	Terminal Type ID	Option
(1) 1	(1) 0.5	(1) VT / BU	(1) 6270	(1) Crankshaft Position Sensor Voltage	(1) I	(1) —
(2) 2	(2) 0.5	(2) BK / VT	(2) 6272	(2) Crankshaft Position Sensor Low Reference	(2) I	(2) —
(3) 3	(3) 0.5	(3) GN	(3) 6271	(3) Crankshaft Position Sensor Signal	(3) I	(3) —

B34 Engine Coolant Temperature Sensor (L84 / L87)

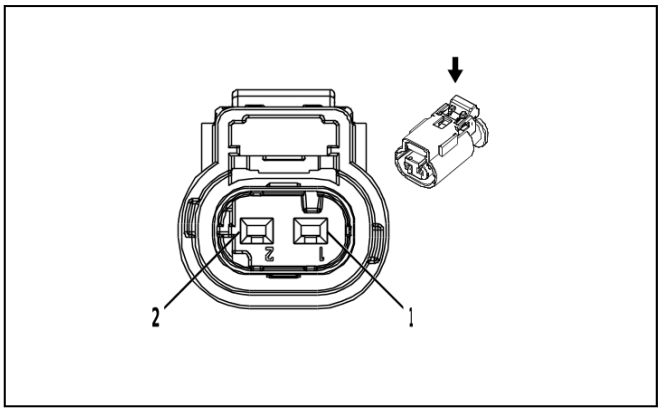

2717066

Connector Part Information
- Harness Type: Valve Rocker Arm Oil Control Valve Extension Harness
- OEM Connector: 10010337
- Service Connector: Service by Harness - See Part Catalog
- Description: 2-Way F 1.2 Multilock Series, Sealed(BK)

Terminal Part Information

Terminal Type ID	Terminated Lead	Diagnostic Test Probe	Terminal Removal Tool
I	Not required	J-35616-12 (BU)	No Tool Required

B34 Engine Coolant Temperature Sensor (L84 / L87)

Pin	Size	Color	Circuit	Function	Terminal Type ID	Option
(1) 1	(1) 0.5	(1) BU	(1) 410	(1) Engine Coolant Temperature Sensor Signal	(1) I	(1) —
(2) 2	(2) 0.5	(2) BK / YE	(2) 548	(2) Engine Control Sensors Low Reference 1	(2) I	(2) —

B34 Engine Coolant Temperature Sensor (LZ0)

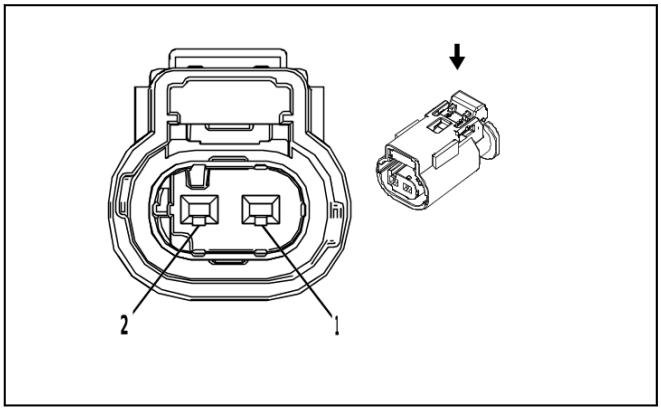

2830969

Connector Part Information

- Harness Type: Engine Wiring Harness
- OEM Connector: 10010339
- Service Connector: 13587321
- Description: 2-Way F 1.2 Multilock Series, Sealed(D-GY)

Terminal Part Information

Terminal Type ID	Terminated Lead	Diagnostic Test Probe	Terminal Removal Tool
I	Not required	J-35616-16 (L-GN)	No Tool Required

B34 Engine Coolant Temperature Sensor (LZ0)

Pin	Size	Color	Circuit	Function	Terminal Type ID	Option
(1) 1	(1) 0.5	(1) YE / BU	(1) 2408	(1) Engine Inlet Coolant Temperature Signal	(1) I	(1) —
(2) 2	(2) 0.5	(2) BK / YE	(2) 548	(2) Engine Control Sensors Low Reference 1	(2) I	(2) —

B34B Engine Coolant Temperature Sensor 2 (LZ0)

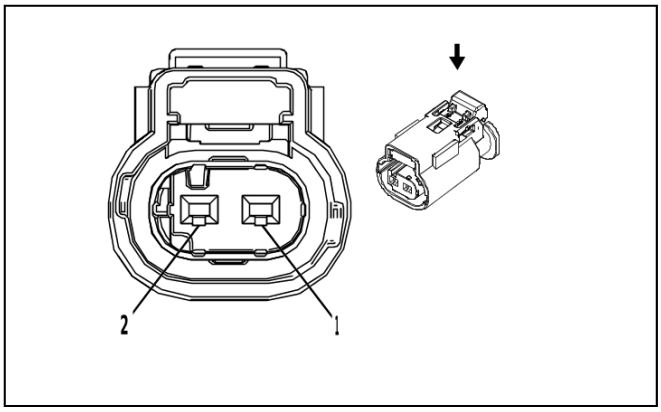

2830969

Connector Part Information
- Harness Type: Engine Coolant Temperature Sensor Harness
- OEM Connector: 13503568
- Service Connector: Service by Harness - See Part Catalog
- Description: 2-Way F 1.2 Multilock Series, Sealed(D-GY)

Terminal Part Information

Terminal Type ID	Terminated Lead	Diagnostic Test Probe	Terminal Removal Tool
I	Not required	No Tool Required	No Tool Required

B34B Engine Coolant Temperature Sensor 2 (LZ0)

Pin	Size	Color	Circuit	Function	Terminal Type ID	Option
(1) 1	(1) —	(1) VT	(1) 2988	(1) Engine Outlet Coolant Temperature Signal	(1) I	(1) —
(2) 2	(2) —	(2) BK / GY	(2) 626	(2) Engine Control Vehicle Sensors Low Reference 1	(2) I	(2) —

B34K Charge Air Cooler Coolant Temperature Sensor - Inlet (LZ0)

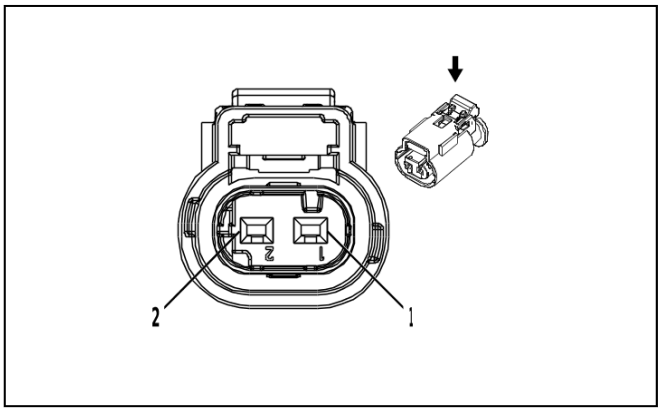

2717066

Connector Part Information
- Harness Type: Engine Wiring Harness
- OEM Connector: 10010337
- Service Connector: 13587326
- Description: 2-Way F 1.2 Multilock Series, Sealed(BK)

Terminal Part Information

Terminal Type ID	Terminated Lead	Diagnostic Test Probe	Terminal Removal Tool
I	Not required	J-35616-16 (L-GN)	No Tool Required

B34K Charge Air Cooler Coolant Temperature Sensor - Inlet (LZ0)

Pin	Size	Color	Circuit	Function	Terminal Type ID	Option
(1) 1	(1) 0.5	(1) BU / BK	(1) 1422	(1) Engine Water Charge Air Coolant Temperature Signal	(1) I	(1) —
(2) 2	(2) 0.5	(2) BK / GY	(2) 626	(2) Engine Control Vehicle Sensors Low Reference 1	(2) I	(2) —

B35 Engine Oil Level Indicator Switch (L84 / L87)

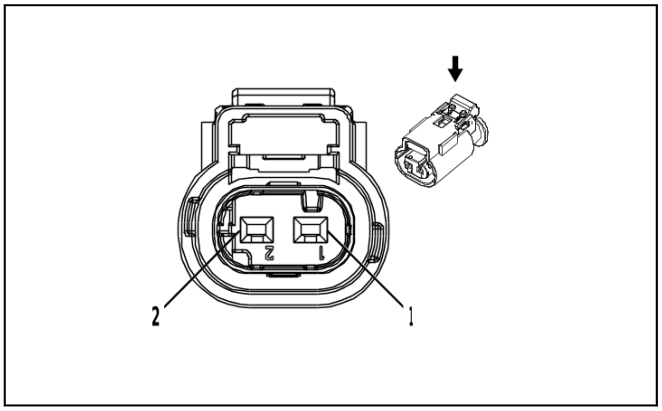

2717066

Connector Part Information

- Harness Type: Engine Wiring Harness
- OEM Connector: 10010337
- Service Connector: 13587326
- Description: 2-Way F 1.2 Multilock Series, Sealed(BK)

Terminal Part Information

Terminal Type ID	Terminated Lead	Diagnostic Test Probe	Terminal Removal Tool
I	Not required	J-35616-16 (L-GN)	No Tool Required

B35 Engine Oil Level Indicator Switch (L84 / L87)

Pin	Size	Color	Circuit	Function	Terminal Type ID	Option
(1) 1	(1) 0.5	(1) BN / GN	(1) 1174	(1) Oil Level Switch Signal	(1) I	(1) —
(2) 2	(2) 1	(2) BK / WH	(2) 6151	(2) Engine Control Module Ground	(2) I	(2) —

B36 Engine Oil Temperature Sensor (LZ0)

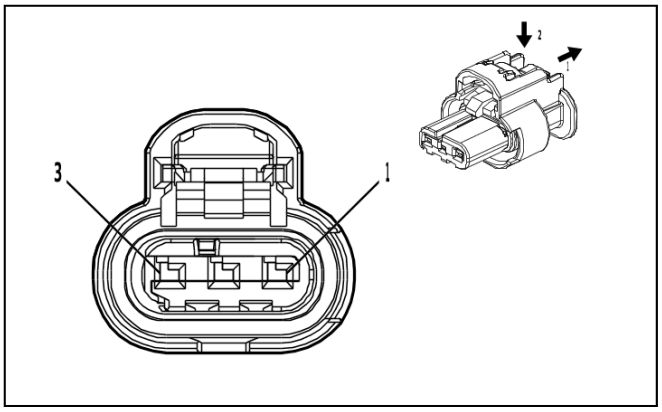

4994602

Connector Part Information

- Harness Type: Engine Wiring Harness
- OEM Connector: 1-2296695-3
- Service Connector: 19371199
- Description: 3-Way F 1.2 MCON-CB Series, Sealed(BK)

Terminal Part Information

Terminal Type ID	Terminated Lead	Diagnostic Test Probe	Terminal Removal Tool
I	Not required	J-35616-16 (L-GN)	No Tool Required

B36 Engine Oil Temperature Sensor (LZ0)

Pin	Size	Color	Circuit	Function	Terminal Type ID	Option
(1) 1	(1) 0.5	(1) BK / GY	(1) 626	(1) Engine Control Vehicle Sensors Low Reference 1	(1) I	(1) —
(2) 2	(2) 0.5	(2) BN / BU	(2) 357	(2) Oil Temperature Sensor Signal	(2) I	(2) —
(3) 3	(3) 0.5	(3) VT	(3) 7485	(3) Engine Oil Temperature Sensor 2 Signal	(3) I	(3) —

B37B Engine Oil Pressure Sensor (L84 / L87)

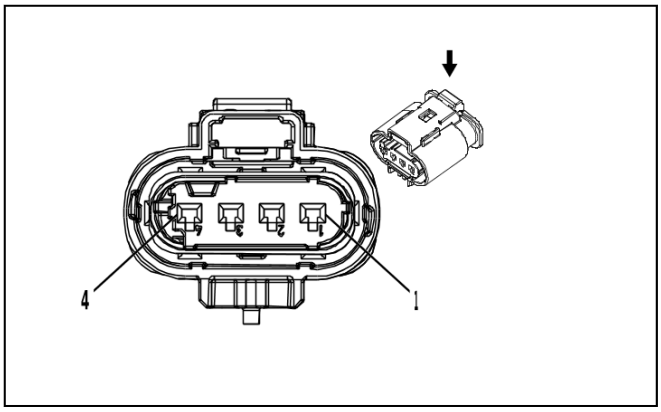

2717079

Connector Part Information

- Harness Type: Engine Wiring Harness
- OEM Connector: 10010346
- Service Connector: 13587299
- Description: 4-Way F 1.2 Multilock Series, Sealed(BK)

Terminal Part Information

Terminal Type ID	Terminated Lead	Diagnostic Test Probe	Terminal Removal Tool
I	Not required	J-35616-16 (L-GN)	No Tool Required

B37B Engine Oil Pressure Sensor (L84 / L87)

Pin	Size	Color	Circuit	Function	Terminal Type ID	Option
(1) 1	(1) 0.5	(1) BK / YE	(1) 548	(1) Engine Control Sensors Low Reference 1	(1) I	(1) —
(2) 2	(2) 0.5	(2) YE / BN	(2) 331	(2) Oil Pressure Sensor Signal	(2) I	(2) —
(3) 3	(3) 0.5	(3) WH / RD	(3) 480	(3) Engine Control Vehicle Sensors 5 Volt Reference 1	(3) I	(3) —
(4) 4	(4) 0.5	(4) BN / BU	(4) 357	(4) Oil Temperature Sensor Signal	(4) I	(4) —

B37B Engine Oil Pressure Sensor (LZ0)

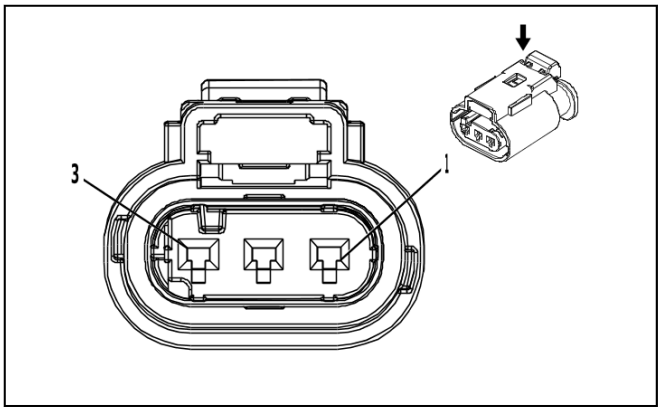

3240107

Connector Part Information

- Harness Type: Engine Wiring Harness
- OEM Connector: 10010344
- Service Connector: 19301717
- Description: 3-Way F 1.2 Multilock Series, Sealed(BK)

Terminal Part Information

Terminal Type ID	Terminated Lead	Diagnostic Test Probe	Terminal Removal Tool
I	Not required	J-35616-16 (L-GN)	No Tool Required

B37B Engine Oil Pressure Sensor (LZ0)

Pin	Size	Color	Circuit	Function	Terminal Type ID	Option
(1) 1	(1) 0.5	(1) YE / BN	(1) 331	(1) Oil Pressure Sensor Signal	(1) I	(1) —
(2) 2	(2) 0.5	(2) BK / YE	(2) 548	(2) Engine Control Sensors Low Reference 1	(2) I	(2) —
(3) 3	(3) 0.5	(3) BU / RD	(3) 460	(3) Engine Control Sensors 5 Volt Reference 1	(3) I	(3) —

B39 Air Conditioning Evaporator Air Temperature Sensor

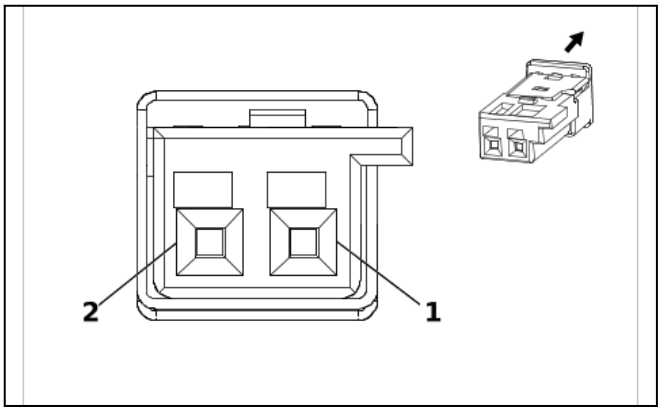

2780265

Connector Part Information
- Harness Type: Heater Wiring Harness
- OEM Connector: 2-1718333-1
- Service Connector: Service by Harness - See Part Catalog
- Description: 2-Way F 0.64 Micro-Quadlock Series(NA)

Terminal Part Information

Terminal Type ID	Terminated Lead	Diagnostic Test Probe	Terminal Removal Tool
I	Not required	J-35616-64B (L-BU)	No Tool Required

B39 Air Conditioning Evaporator Air Temperature Sensor

Pin	Size	Color	Circuit	Function	Terminal Type ID	Option
(1) 1	(1) 0.35	(1) BN	(1) 6137	(1) Air Conditioning Evaporator Temperature Sensor Signal	(1) I	(1) —
(2) 2	(2) 0.35	(2) BK / YE	(2) 407	(2) Sensor Low Reference	(2) I	(2) —

B47 Fuel Pressure Sensor (L84 / L87)

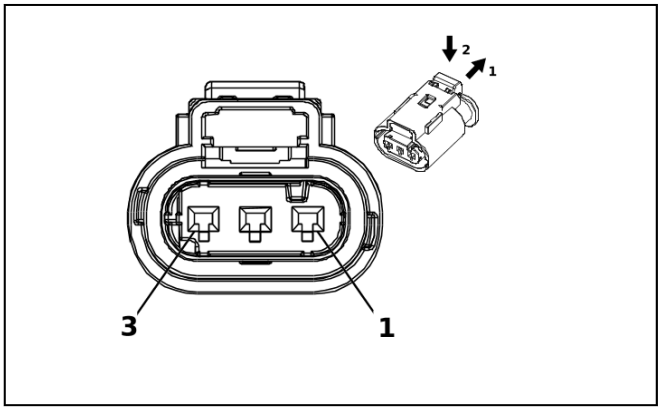

2717069

Connector Part Information
- Harness Type: Chassis Wiring Harness
- OEM Connector: 10010341
- Service Connector: 84601390
- Description: 3-Way F 1.2 Multilock Series, Sealed(BK)

Terminal Part Information

Terminal Type ID	Terminated Lead	Diagnostic Test Probe	Terminal Removal Tool
I	Not required	J-35616-16 (L-GN)	No Tool Required

B47 Fuel Pressure Sensor (L84 / L87)

Pin	Size	Color	Circuit	Function	Terminal Type ID	Option
(1) 1	(1) 0.5	(1) BN / RD	(1) 7445	(1) Fuel Line Pressure Sensor 5V Reference	(1) I	(1) —
(2) 2	(2) 0.5	(2) BK / YE	(2) 7447	(2) Fuel Pressure Sensor Low Reference	(2) I	(2) —
(3) 3	(3) 0.5	(3) BU / WH	(3) 7446	(3) Fuel Pressure Sensor Signal	(3) I	(3) —

B47 Fuel Pressure Sensor (LZ0)

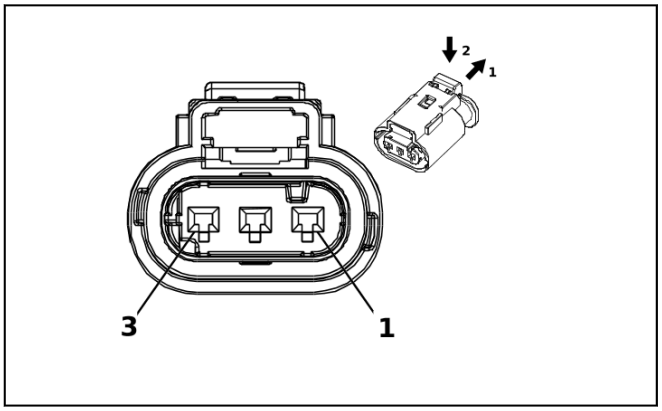

2717069

Connector Part Information

- Harness Type: Chassis Wiring Harness
- OEM Connector: 10010341
- Service Connector: 84601390
- Description: 3-Way F 1.2 Multilock Series, Sealed(BK)

Terminal Part Information

Terminal Type ID	Terminated Lead	Diagnostic Test Probe	Terminal Removal Tool
I	Not required	J-35616-16 (L-GN)	No Tool Required

B47 Fuel Pressure Sensor (LZ0)

Pin	Size	Color	Circuit	Function	Terminal Type ID	Option
(1) 1	(1) 0.5	(1) BN / RD	(1) 7445	(1) Fuel Line Pressure Sensor 5V Reference	(1) I	(1) —
(2) 2	(2) 0.5	(2) BK / YE	(2) 7447	(2) Fuel Pressure Sensor Low Reference	(2) I	(2) —
(3) 3	(3) 0.5	(3) BU / WH	(3) 7446	(3) Fuel Pressure Sensor Signal	(3) I	(3) —

B47B Fuel Rail Pressure Sensor (LZ0)

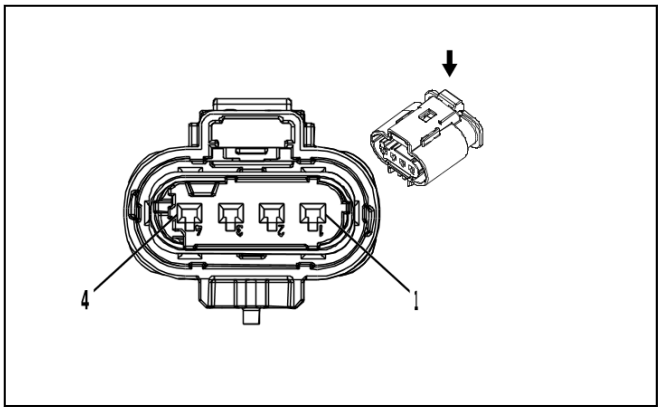

2717079

Connector Part Information

- Harness Type: Engine Wiring Harness
- OEM Connector: 10010346
- Service Connector: 13587299
- Description: 4-Way F 1.2 Multilock Series, Sealed(BK)

Terminal Part Information

Terminal Type ID	Terminated Lead	Diagnostic Test Probe	Terminal Removal Tool
I	Not required	J-35616-16 (L-GN)	No Tool Required

B47B Fuel Rail Pressure Sensor (LZ0)

Pin	Size	Color	Circuit	Function	Terminal Type ID	Option
(1) 1	(1) 0.5	(1) BN / RD	(1) 2917	(1) Fuel Rail Pressure Sensor 5V Reference	(1) I	(1) —
(2) 2	(2) 0.5	(2) BN / YE	(2) 2161	(2) Fuel Rail Pressure Sensor 2 Signal	(2) I	(2) —
(3) 3	(3) 0.5	(3) BK / GN	(3) 2919	(3) Fuel Rail Pressure Sensor Low Reference	(3) I	(3) —
(4) 4	(4) 0.5	(4) BU / WH	(4) 2918	(4) Fuel Rail Pressure Sensor Signal	(4) I	(4) —

B52C Heated Oxygen Sensor - Bank 1 Sensor 1 (L84 / L87)

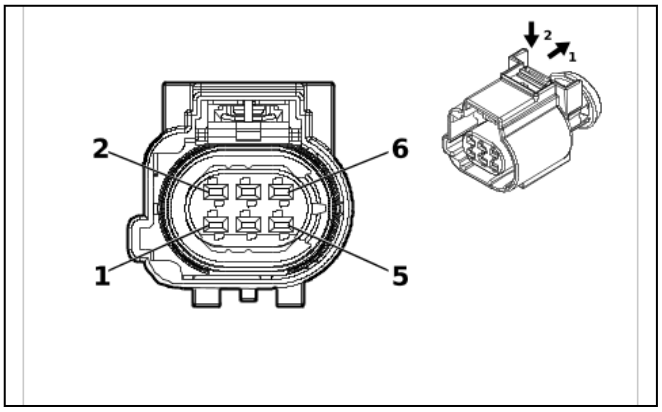

6312186

Connector Part Information

- Harness Type: Engine Wiring Harness
- OEM Connector: 2-2309220-2
- Service Connector: 85686357
- Description: 6-Way F 1.5 MCP Series, Sealed(BN)

Terminal Part Information

Terminal Type ID	Terminated Lead	Diagnostic Test Probe	Terminal Removal Tool
I	Not required	J-35616-14 (GN)	No Tool Required

B52C Heated Oxygen Sensor - Bank 1 Sensor 1 (L84 / L87)

Pin	Size	Color	Circuit	Function	Terminal Type ID	Option
(1) 1	(1) 0.5	(1) BN / WH	(1) 6933	(1) HO2S Pump Current Signal	(1) I	(1) —
(2) 2	(2) 0.5	(2) BN	(2) 6934	(2) HO2S Ground	(2) I	(2) —
(3) 3	(3) 0.5	(3) GY / WH	(3) 3113	(3) HO2S Heater Low Control Bank 1 Sensor 1	(3) I	(3) —
(4) 4	(4) 0.75	(4) VT / BU	(4) 5293	(4) Powertrain Main Relay Fused Supply Voltage 4	(4) I	(4) —
(5) 5	(5) 0.5	(5) GN	(5) 6935	(5) HO2S Pump Current Trim Signal	(5) I	(5) —
(6) 6	(6) 0.5	(6) YE / GY	(6) 6936	(6) HO2S Signal	(6) I	(6) —

B52D Heated Oxygen Sensor - Bank 1 Sensor 2 (L84 / L87)

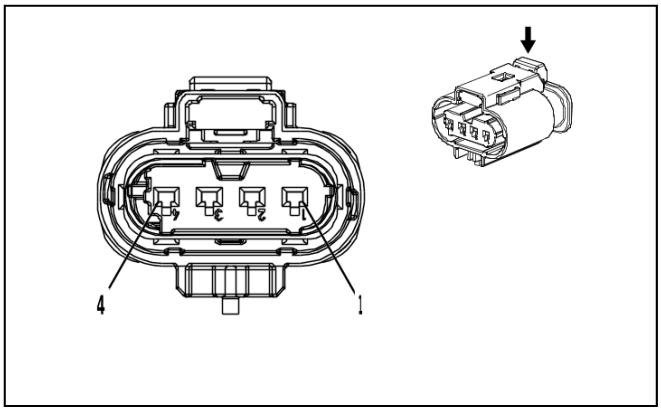

4036370

Connector Part Information

- Harness Type: Engine Wiring Harness
- OEM Connector: 10021266
- Service Connector: 19330920
- Description: 4-Way F 1.2 Multilock Series, Sealed(GY)

Terminal Part Information

Terminal Type ID	Terminated Lead	Diagnostic Test Probe	Terminal Removal Tool
I	Not required	J-35616-16 (L-GN)	No Tool Required

B52D Heated Oxygen Sensor - Bank 1 Sensor 2 (L84 / L87)

Pin	Size	Color	Circuit	Function	Terminal Type ID	Option
(1) 1	(1) 0.75	(1) GY / WH	(1) 3122	(1) HO2S Heater Low Control Bank 1 Sensor 2	(1) I	(1) —
(2) 2	(2) 0.75	(2) VT / BU	(2) 5294	(2) Powertrain Main Relay Fused Supply Voltage 5	(2) I	(2) —
(3) 3	(3) 0.5	(3) WH / YE	(3) 3121	(3) HO2S Low Signal Bank 1 Sensor 2	(3) I	(3) —
(4) 4	(4) 0.5	(4) VT / BU	(4) 3120	(4) HO2S High Signal Bank 1 Sensor 2	(4) I	(4) —

B52E Heated Oxygen Sensor - Bank 2 Sensor 1 (L84 / L87)

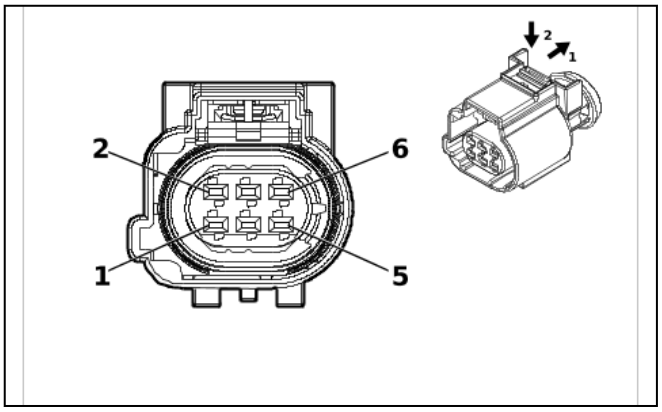

6312186

Connector Part Information

- Harness Type: Engine Wiring Harness
- OEM Connector: 2-2309220-2
- Service Connector: 85686357
- Description: 6-Way F 1.5 MCP Series, Sealed(BN)

Terminal Part Information

Terminal Type ID	Terminated Lead	Diagnostic Test Probe	Terminal Removal Tool
I	Not required	J-35616-14 (GN)	No Tool Required

B52E Heated Oxygen Sensor - Bank 2 Sensor 1 (L84 / L87)

Pin	Size	Color	Circuit	Function	Terminal Type ID	Option
(1) 1	(1) 0.5	(1) YE / WH	(1) 2570	(1) Heated Oxygen Sensor 2 Pump Current Signal	(1) I	(1) —
(2) 2	(2) 0.5	(2) WH	(2) 2571	(2) Heated Oxygen Sensor 2 Common Bank 2 Sensor 1 Signal	(2) I	(2) —
(3) 3	(3) 0.5	(3) GN / YE	(3) 3212	(3) HO2S Heater Low Control Bank 2 Sensor 1	(3) I	(3) —
(4) 4	(4) 0.75	(4) VT / BU	(4) 5294	(4) Powertrain Main Relay Fused Supply Voltage 5	(4) I	(4) —
(5) 5	(5) 0.5	(5) BU	(5) 2572	(5) Heated Oxygen Sensor 2 Current Adjust Signal	(5) I	(5) —
(6) 6	(6) 0.5	(6) BN / GY	(6) 2573	(6) Heated Oxygen Sensor 2 Collector Signal	(6) I	(6) —

B52F Heated Oxygen Sensor - Bank 2 Sensor 2 (L84 / L87)

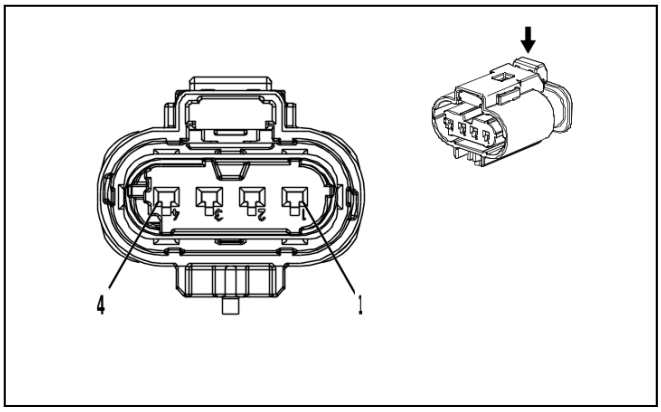

4036370

Connector Part Information

- Harness Type: Engine Wiring Harness
- OEM Connector: 10021266
- Service Connector: 19330920
- Description: 4-Way F 1.2 Multilock Series, Sealed(GY)

Terminal Part Information

Terminal Type ID	Terminated Lead	Diagnostic Test Probe	Terminal Removal Tool
I	Not required	J-35616-16 (L-GN)	No Tool Required

B52F Heated Oxygen Sensor - Bank 2 Sensor 2 (L84 / L87)

Pin	Size	Color	Circuit	Function	Terminal Type ID	Option
(1) 1	(1) 0.75	(1) WH / BN	(1) 3223	(1) HO2S Heater Low Control Bank 2 Sensor 2	(1) I	(1) —
(2) 2	(2) 0.75	(2) VT / BU	(2) 5294	(2) Powertrain Main Relay Fused Supply Voltage 5	(2) I	(2) —
(3) 3	(3) 0.5	(3) YE / BU	(3) 3221	(3) HO2S Low Signal Bank 2 Sensor 2	(3) I	(3) —
(4) 4	(4) 0.5	(4) VT / GN	(4) 3220	(4) HO2S High Signal Bank 2 Sensor 2	(4) I	(4) —

B55 Engine Compartment Cover Switch

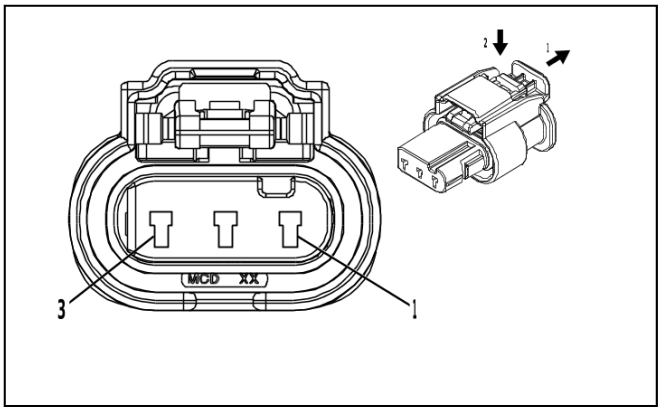

4421568

Connector Part Information
- Harness Type: Body Wiring Harness
- OEM Connector: 34900-3120
- Service Connector: 19368220
- Description: 3-Way F 1.2 MCON-LL Series, Sealed(BK)

Terminal Part Information

Terminal Type ID	Terminated Lead	Diagnostic Test Probe	Terminal Removal Tool
I	Not required	J-35616-16 (L-GN)	No Tool Required

B55 Engine Compartment Cover Switch

Pin	Size	Color	Circuit	Function	Terminal Type ID	Option
(1) 1	(1) 0.5	(1) YE	(1) 4063	(1) Hood Status A Signal	(1) I	(1) —
(2) 2	(2) 0.35	(2) BN / GN	(2) 4064	(2) Hood Status B Signal	(2) I	(2) —
(3) 3	(3) 0.75	(3) BK	(3) 150	(3) Ground	(3) I	(3) —

B58L Airbag Front End Discriminating Sensor - Left

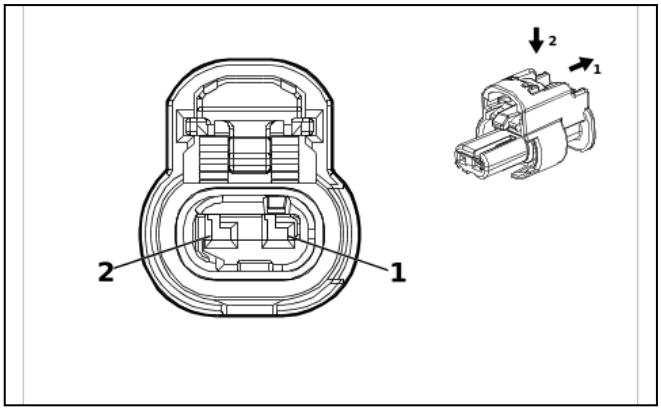

4649903

Connector Part Information
- Harness Type: Body Wiring Harness
- OEM Connector: 1-2296694-1
- Service Connector: 85761014
- Description: 2-Way F 1.2 MCON Series, Sealed(BK)

Terminal Part Information

Terminal Type ID	Terminated Lead	Diagnostic Test Probe	Terminal Removal Tool
I	Not required	J-35616-12 (BU)	No Tool Required

B58L Airbag Front End Discriminating Sensor - Left

Pin	Size	Color	Circuit	Function	Terminal Type ID	Option
(1) 1	(1) 0.5	(1) OG / YE	(1) 354	(1) Left Front Impact Discriminating Sensor Signal	(1) I	(1) —
(2) 2	(2) 0.5	(2) BK / OG	(2) 5045	(2) Left Front Impact Discriminating Sensor Low Reference	(2) I	(2) —

B58R Airbag Front End Discriminating Sensor - Right

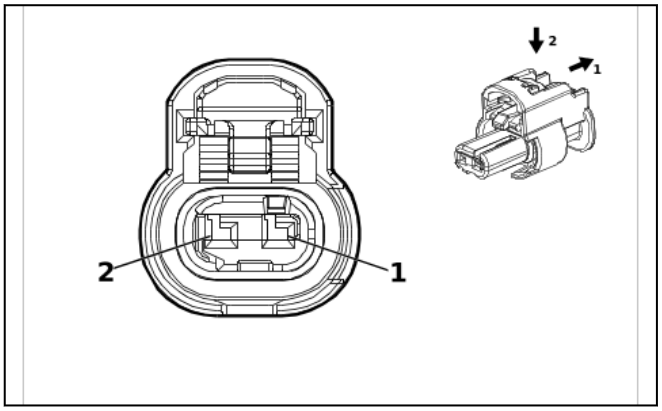

4649903

Connector Part Information

- Harness Type: Body Wiring Harness
- OEM Connector: 1-2296694-1
- Service Connector: 85761014
- Description: 2-Way F 1.2 MCON Series, Sealed(BK)

Terminal Part Information

Terminal Type ID	Terminated Lead	Diagnostic Test Probe	Terminal Removal Tool
I	Not required	J-35616-12 (BU)	No Tool Required

B58R Airbag Front End Discriminating Sensor - Right

Pin	Size	Color	Circuit	Function	Terminal Type ID	Option
(1) 1	(1) 0.5	(1) OG / GN	(1) 1409	(1) Right Front Impact Discriminating Sensor Signal	(1) I	(1) —
(2) 2	(2) 0.5	(2) BK / OG	(2) 5600	(2) Right Front Impact Discriminating Sensor Low Reference	(2) I	(2) —

B61P Seat Belt Tension Sensor - Passenger

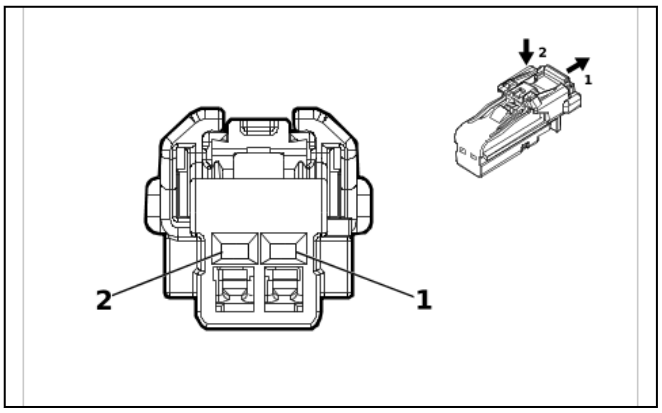

4115691

Connector Part Information
- Harness Type: Body Wiring Harness
- OEM Connector: 6098-8988
- Service Connector: 87816612
- Description: 2-Way F 1.2 MCON Series(BK)

Terminal Part Information

Terminal Type ID	Terminated Lead	Diagnostic Test Probe	Terminal Removal Tool
I	Not required	J-35616-16 (L-GN)	No Tool Required

B61P Seat Belt Tension Sensor - Passenger

Pin	Size	Color	Circuit	Function	Terminal Type ID	Option
(1) 1	(1) 0.5	(1) GY / OG	(1) 3946	(1) Passenger Automatic Locking Retractor Switch Low Reference	(1) I	(1) —
(2) 2	(2) 0.5	(2) OG / BN	(2) 3947	(2) Passenger Automatic Locking Retractor Switch Signal	(2) I	(2) —

B63LF Airbag Side Impact Sensor - Left Front Door

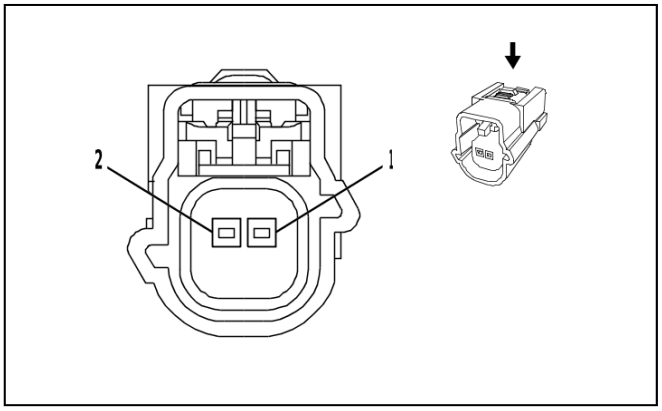

2179777

Connector Part Information
- Harness Type: Front Side Door Door Wiring Harness - Driver
- OEM Connector: 13610095
- Service Connector: Service by Harness - See Part Catalog
- Description: 2-Way F 0.64 Series, Sealed(GY)

Terminal Part Information

Terminal Type ID	Terminated Lead	Diagnostic Test Probe	Terminal Removal Tool
I	Not required	J-35616-64B (L-BU)	No Tool Required

B63LF Airbag Side Impact Sensor - Left Front Door

Pin	Size	Color	Circuit	Function	Terminal Type ID	Option
(1) 1	(1) 0.5	(1) OG / GN	(1) 2132	(1) Left Front Side Impact Sensor Signal	(1) I	(1) —
(2) 2	(2) 0.5	(2) BK / OG	(2) 6628	(2) Left Front Side Impact Sensor Low Reference	(2) I	(2) —

B63LR Airbag Side Impact Rear Sensor - Left Door

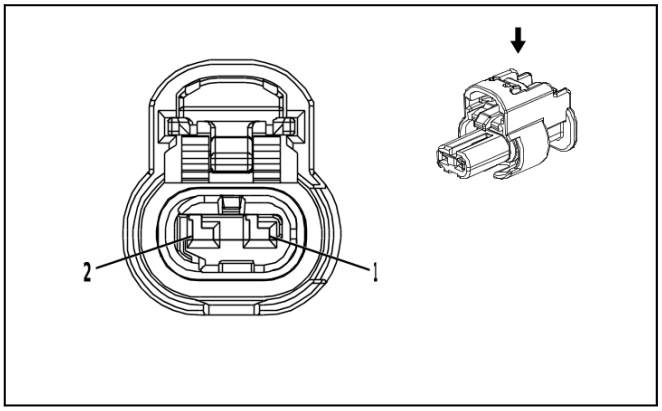

4335931

Connector Part Information

- Harness Type: Body Wiring Harness
- OEM Connector: 1-2296694-2
- Service Connector: 19366843
- Description: 2-Way F 1.2 MCON Series, Sealed(BK)

Terminal Part Information

Terminal Type ID	Terminated Lead	Diagnostic Test Probe	Terminal Removal Tool
I	Not required	J-35616-12 (BU)	No Tool Required

B63LR Airbag Side Impact Rear Sensor - Left Door

Pin	Size	Color	Circuit	Function	Terminal Type ID	Option
(1) 1	(1) 0.5	(1) OG / BU	(1) 6622	(1) Left Rear Side Impact Sensor Signal	(1) I	(1) —
(2) 2	(2) 0.5	(2) BK / OG	(2) 6623	(2) Left Rear Side Impact Sensor Low Reference	(2) I	(2) —

B63RF Airbag Side Impact Sensor - Right Front Door

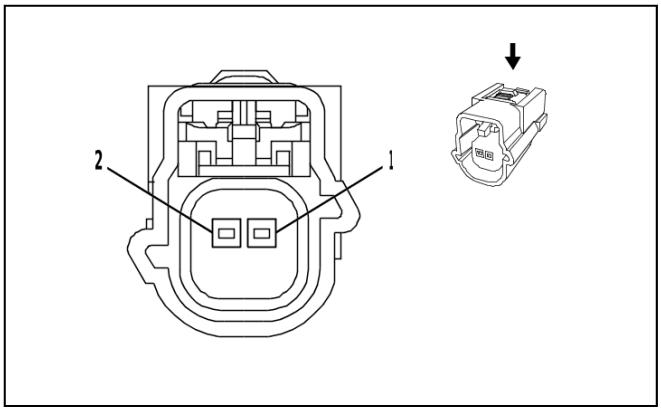

2179777

Connector Part Information
- Harness Type: Front Side Door Door Wiring Harness - Passenger
- OEM Connector: 13610095
- Service Connector: Service by Harness - See Part Catalog
- Description: 2-Way F 0.64 Series, Sealed(GY)

Terminal Part Information

Terminal Type ID	Terminated Lead	Diagnostic Test Probe	Terminal Removal Tool
I	Not required	J-35616-64B (L-BU)	No Tool Required

B63RF Airbag Side Impact Sensor - Right Front Door

Pin	Size	Color	Circuit	Function	Terminal Type ID	Option
(1) 1	(1) 0.5	(1) BN / OG	(1) 2134	(1) Right Front Side Impact Sensor Signal	(1) I	(1) —
(2) 2	(2) 0.5	(2) BK / OG	(2) 6629	(2) Right Front Side Impact Sensor Low Reference	(2) I	(2) —

B63RR Airbag Side Impact Rear Sensor - Right Door

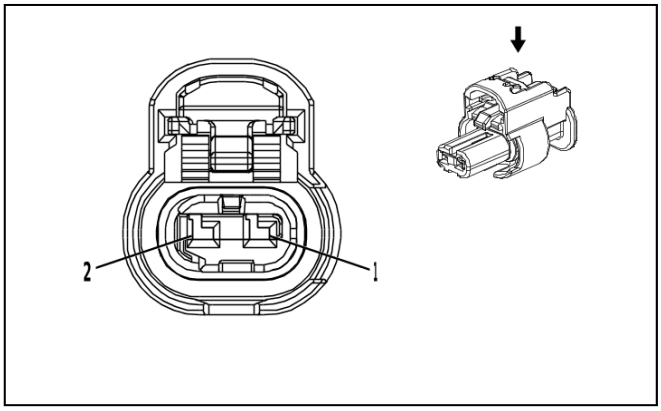

4335931

Connector Part Information
- Harness Type: Body Wiring Harness
- OEM Connector: 1-2296694-2
- Service Connector: 19366843
- Description: 2-Way F 1.2 MCON Series, Sealed(BK)

Terminal Part Information

Terminal Type ID	Terminated Lead	Diagnostic Test Probe	Terminal Removal Tool
I	Not required	J-35616-12 (BU)	No Tool Required

B63RR Airbag Side Impact Rear Sensor - Right Door

Pin	Size	Color	Circuit	Function	Terminal Type ID	Option
(1) 1	(1) 0.5	(1) OG / WH	(1) 6626	(1) Right Rear Side Impact Sensor Signal	(1) I	(1) —
(2) 2	(2) 0.5	(2) BK / OG	(2) 6627	(2) Right Rear Side Impact Sensor Low Reference	(2) I	(2) —

B65 Manifold Absolute Pressure and Intake Air Temperature Sensor (LZ0)

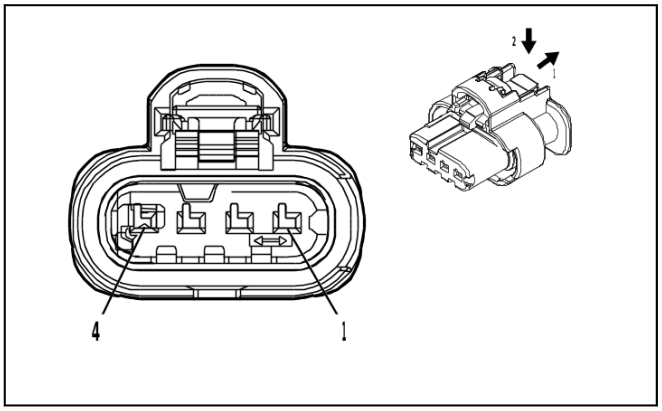

4934614

Connector Part Information

- Harness Type: Engine Wiring Harness
- OEM Connector: 1-2296696-2
- Service Connector: 85519071
- Description: 4-Way F 1.2 MCON-CB Series, Sealed(BK)

Terminal Part Information

Terminal Type ID	Terminated Lead	Diagnostic Test Probe	Terminal Removal Tool
I	Not required	J-35616-16 (L-GN)	No Tool Required

B65 Manifold Absolute Pressure and Intake Air Temperature Sensor (LZ0)

Pin	Size	Color	Circuit	Function	Terminal Type ID	Option
(1) 1	(1) 0.5	(1) WH / BU	(1) 7329	(1) Pre-Throttle Air Temperature Signal	(1) I	(1) —
(2) 2	(2) 0.5	(2) WH / RD	(2) 480	(2) Engine Control Vehicle Sensors 5 Volt Reference 1	(2) I	(2) —
(3) 3	(3) 0.5	(3) BK / GN	(3) 580	(3) Engine Control Sensors Low Reference 2	(3) I	(3) —
(4) 4	(4) 0.5	(4) GN / WH	(4) 432	(4) Manifold Absolute Pressure Sensor Signal	(4) I	(4) —

B68A Knock Sensor 1 (L84 / L87)

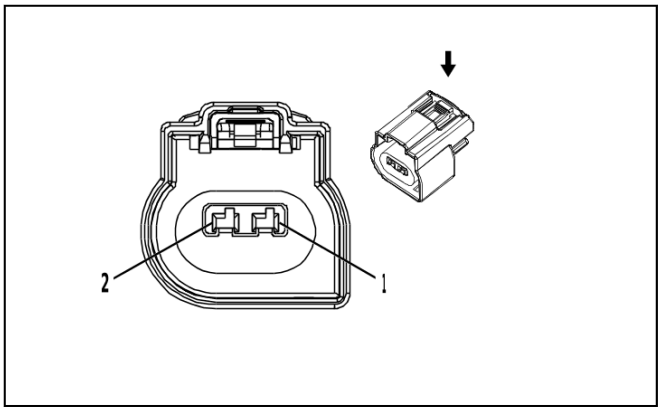

2717073

Connector Part Information
- Harness Type: Engine Wiring Harness
- OEM Connector: 34752-0204
- Service Connector: 19301207
- Description: 2-Way F 1.5 MX Series, Sealed(BK)

Terminal Part Information

Terminal Type ID	Terminated Lead	Diagnostic Test Probe	Terminal Removal Tool
I	Not required	J-35616-14 (GN)	No Tool Required

B68A Knock Sensor 1 (L84 / L87)

Pin	Size	Color	Circuit	Function	Terminal Type ID	Option
(1) 1	(1) 0.75	(1) BK / YE	(1) 1716	(1) Knock Sensor Low Reference 1	(1) I	(1) —
(2) 2	(2) 0.75	(2) VT / GY	(2) 496	(2) Knock Sensor 1 Signal	(2) I	(2) —

B68B Knock Sensor 2 (L84 / L87)

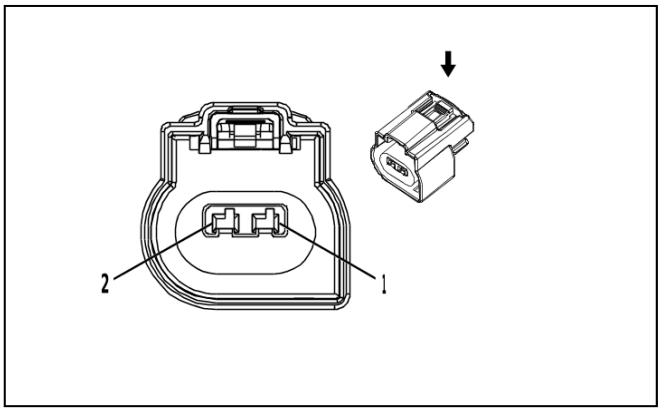

2717073

Connector Part Information
- Harness Type: Engine Wiring Harness
- OEM Connector: 34752-0204
- Service Connector: 19301207
- Description: 2-Way F 1.5 MX Series, Sealed(BK)

Terminal Part Information

Terminal Type ID	Terminated Lead	Diagnostic Test Probe	Terminal Removal Tool
I	Not required	J-35616-14 (GN)	No Tool Required

B68B Knock Sensor 2 (L84 / L87)

Pin	Size	Color	Circuit	Function	Terminal Type ID	Option
(1) 1	(1) 0.75	(1) WH / GY	(1) 1876	(1) Knock Sensor 2 Signal	(1) I	(1) —
(2) 2	(2) 0.75	(2) BK / GY	(2) 2303	(2) Knock Sensor Low Reference 2	(2) I	(2) —

B70 Liftgate Close Switch (TB5 / TCP)

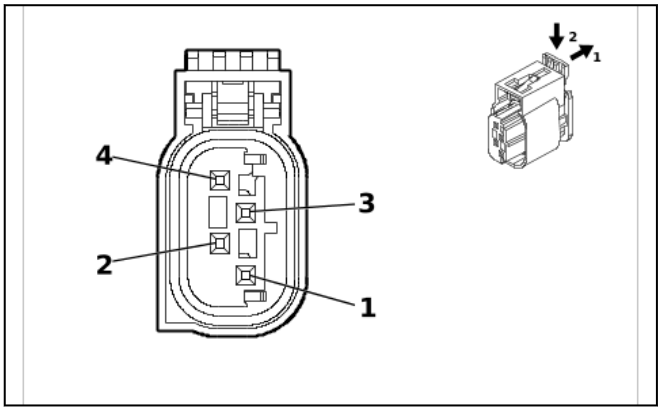

5215490

Connector Part Information

- Harness Type: Liftgate Wiring Harness
- OEM Connector: 13655424
- Service Connector: Service by Harness - See Part Catalog
- Description: 4-Way F 0.64 MTS Series, Sealed(BK)

Terminal Part Information

Terminal Type ID	Terminated Lead	Diagnostic Test Probe	Terminal Removal Tool
I	Not required	J-35616-64B (L-BU)	No Tool Required

B70 Liftgate Close Switch (TB5 / TCP)

Pin	Size	Color	Circuit	Function	Terminal Type ID	Option
(1) 1	(1) 0.35	(1) BK / VT	(1) 4656	(1) Rear Closure Object Sensor Low Reference	(1) I	(1) —
(2) 2	(2) 0.5	(2) GY / WH	(2) 4658	(2) Rear Closure Switch LED Control	(2) I	(2) —
(3) 3	(3) 0.5	(3) GN	(3) 4657	(3) Rear Closure Switch Signal	(3) I	(3) —
4	—	—	—	Not Occupied	—	—

B74 Manifold Absolute Pressure Sensor (L84 / L87)

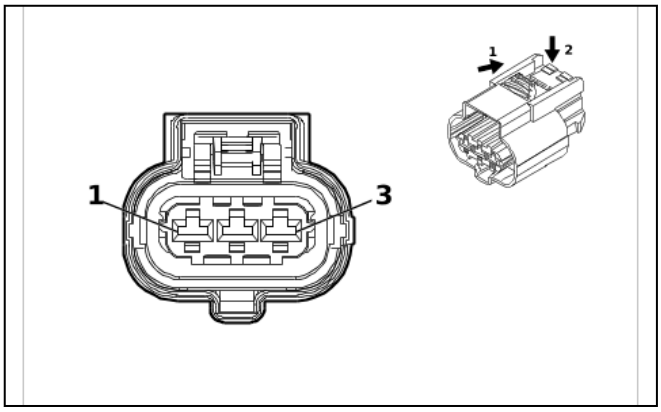

4900977

Connector Part Information

- Harness Type: Engine Wiring Harness
- OEM Connector: 35133579
- Service Connector: 84815530
- Description: 3-Way F 2.8 CTS Series, Sealed(BK)

Terminal Part Information

Terminal Type ID	Terminated Lead	Diagnostic Test Probe	Terminal Removal Tool
I	Not required	J-35616-35 (VT)	No Tool Required

B74 Manifold Absolute Pressure Sensor (L84 / L87)

Pin	Size	Color	Circuit	Function	Terminal Type ID	Option
(1) 1	(1) 0.5	(1) GY / RD	(1) 2704	(1) Manifold Absolute Pressure Sensor 5V Reference	(1) I	(1) —
(2) 2	(2) 0.5	(2) BK / GN	(2) 469	(2) Manifold Absolute Pressure Sensor Low Reference	(2) I	(2) —
(3) 3	(3) 0.5	(3) GN / WH	(3) 432	(3) Manifold Absolute Pressure Sensor Signal	(3) I	(3) —

B75 Mass Airflow Sensor (L84 / L87)

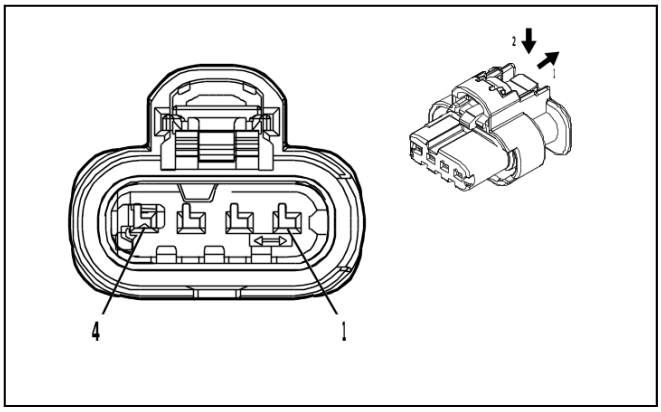

4934614

Connector Part Information

- Harness Type: Engine Wiring Harness
- OEM Connector: 1-2296696-2
- Service Connector: 85519071
- Description: 4-Way F 1.2 MCON-CB Series, Sealed(BK)

Terminal Part Information

Terminal Type ID	Terminated Lead	Diagnostic Test Probe	Terminal Removal Tool
I	Not required	J-35616-16 (L-GN)	No Tool Required

B75 Mass Airflow Sensor (L84 / L87)

Pin	Size	Color	Circuit	Function	Terminal Type ID	Option
(1) 1	(1) 0.75	(1) VT / BU	(1) 5294	(1) Powertrain Main Relay Fused Supply Voltage 5	(1) I	(1) —
(2) 2	(2) 0.5	(2) GN / WH	(2) 492	(2) Mass Air Flow Sensor Signal	(2) I	(2) —
(3) 3	(3) 0.5	(3) GN / WH	(3) 4622	(3) Engine Control Module LIN Bus 2	(3) I	(3) —
(4) 4	(4) 1	(4) BK / WH	(4) 6151	(4) Engine Control Module Ground	(4) I	(4) —

B75 Mass Airflow Sensor (LZ0)

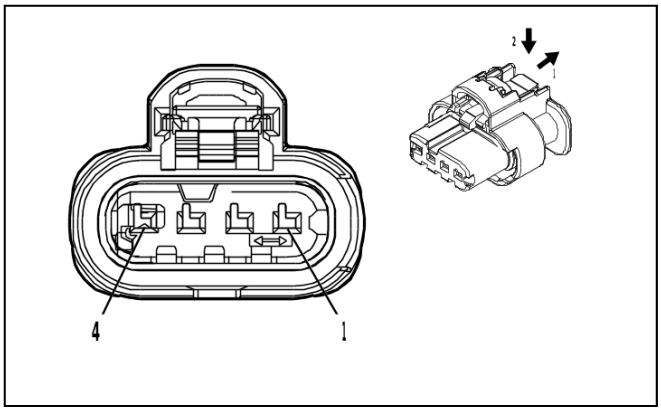

4934614

Connector Part Information

- Harness Type: Engine Wiring Harness
- OEM Connector: 1-2296696-2
- Service Connector: 85519071
- Description: 4-Way F 1.2 MCON-CB Series, Sealed(BK)

Terminal Part Information

Terminal Type ID	Terminated Lead	Diagnostic Test Probe	Terminal Removal Tool
I	Not required	J-35616-16 (L-GN)	No Tool Required

B75 Mass Airflow Sensor (LZ0)

Pin	Size	Color	Circuit	Function	Terminal Type ID	Option
(1) 1	(1) 0.5	(1) VT / BU	(1) 5294	(1) Powertrain Main Relay Fused Supply Voltage 5	(1) I	(1) —
(2) 2	(2) 0.5	(2) GN / WH	(2) 492	(2) Mass Air Flow Sensor Signal	(2) I	(2) —
(3) 3	(3) 0.5	(3) GN / WH	(3) 4622	(3) Engine Control Module LIN Bus 2	(3) I	(3) —
(4) 4	(4) 1	(4) BK / WH	(4) 6151	(4) Engine Control Module Ground	(4) I	(4) —

B87 Rearview Driver Information Camera

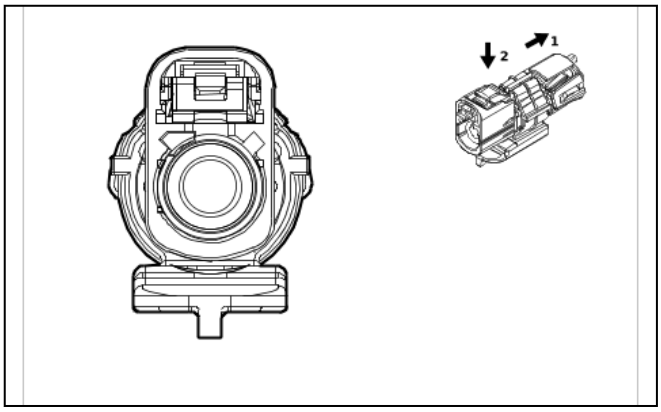

5519150

Connector Part Information
- Harness Type: Rear License Plate Lamp Wiring Harness COAX
- OEM Connector: 35187047
- Service Connector: Service by Cable Assembly — See Part Catalog
- Description: 1-Way F Coax Type, Sealed(BK)

Terminal Part Information

Terminal Type ID	Terminated Lead	Diagnostic Test Probe	Terminal Removal Tool
I	Not required	No Tool Required	No Tool Required

B87 Rearview Driver Information Camera

Pin	Size	Color	Circuit	Function	Terminal Type ID	Option
—	—	Coax Cable	—	Rear Vision Camera Coaxial Video Signal	I	—

B88CL Seat Belt Switch - 3rd Row Left (UH6)

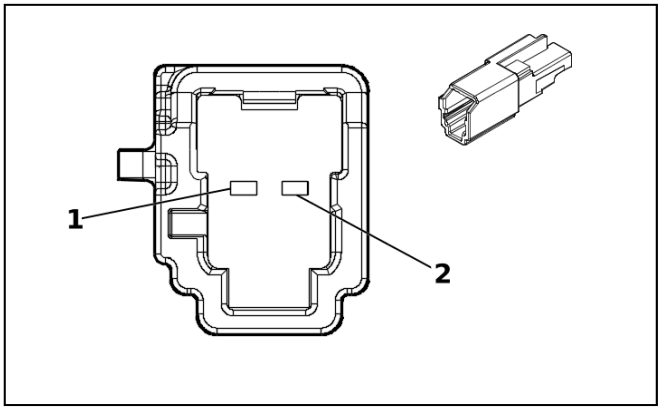

5360948

Connector Part Information
- Harness Type: 3rd Row Seat Wiring Harness
- OEM Connector: 13530129
- Service Connector: Service by Harness - See Part Catalog
- Description: 2-Way M 1.2 MCON Series(GY)

Terminal Part Information

Terminal Type ID	Terminated Lead	Diagnostic Test Probe	Terminal Removal Tool
I	Not required	No Tool Required	No Tool Required

B88CL Seat Belt Switch - 3rd Row Left (UH6)

Pin	Size	Color	Circuit	Function	Terminal Type ID	Option
(1) 1	(1) —	(1) BK / OG	(1) 1363	(1) Driver Seat Belt Switch Low Reference	(1) I	(1) —
(2) 2	(2) —	(2) GN / OG	(2) 3516	(2) 3rd Row Left Seat Belt Switch Signal	(2) I	(2) —

B88CM Seat Belt Switch - 3rd Row Middle (UH6)

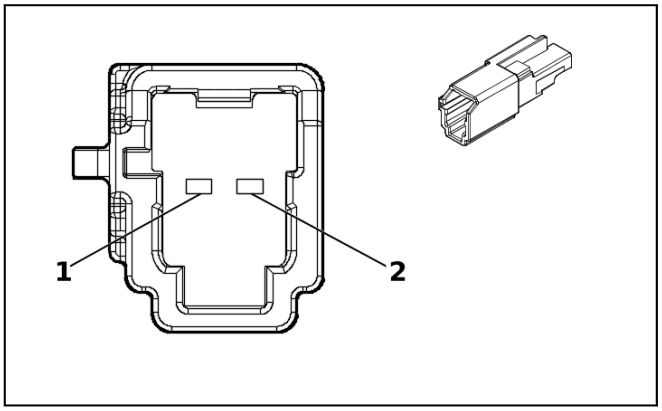

5355341

Connector Part Information

- Harness Type: 3rd Row Seat Wiring Harness
- OEM Connector: 13530128
- Service Connector: Service by Harness - See Part Catalog
- Description: 2-Way M 1.2 MCON Series(BK)

Terminal Part Information

Terminal Type ID	Terminated Lead	Diagnostic Test Probe	Terminal Removal Tool
I	Not required	No Tool Required	No Tool Required

B88CM Seat Belt Switch - 3rd Row Middle (UH6)

Pin	Size	Color	Circuit	Function	Terminal Type ID	Option
(1) 1	(1) —	(1) BK / OG	(1) 1363	(1) Driver Seat Belt Switch Low Reference	(1) I	(1) —
(2) 2	(2) —	(2) OG / GN	(2) 3700	(2) 3rd Row Center Seat Belt Switch Signal	(2) I	(2) —

B88CR Seat Belt Switch - 3rd Row Right (UH6)

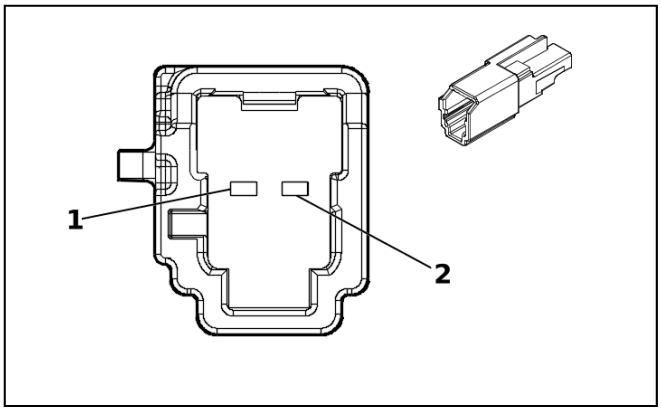

5360948

Connector Part Information
- Harness Type: 3rd Row Seat Wiring Harness
- OEM Connector: 13530129
- Service Connector: Service by Harness - See Part Catalog
- Description: 2-Way M 1.2 MCON Series(GY)

Terminal Part Information

Terminal Type ID	Terminated Lead	Diagnostic Test Probe	Terminal Removal Tool
I	Not required	No Tool Required	No Tool Required

B88CR Seat Belt Switch - 3rd Row Right (UH6)

Pin	Size	Color	Circuit	Function	Terminal Type ID	Option
(1) 1	(1) —	(1) BK / OG	(1) 1363	(1) Driver Seat Belt Switch Low Reference	(1) I	(1) —
(2) 2	(2) —	(2) VT / OG	(2) 3517	(2) 3rd Row Right Seat Belt Switch Signal	(2) I	(2) —

B88DB Seat Belt Sensor - Driver

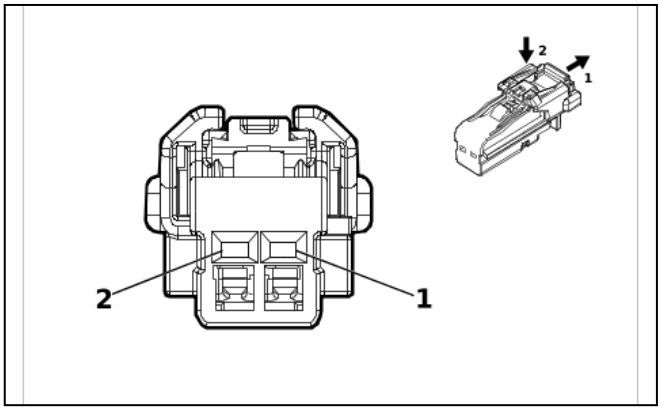

4115691

Connector Part Information
- Harness Type: Front Seat Wiring Harness - Driver
- OEM Connector: 13532422
- Service Connector: Service by Harness - See Part Catalog
- Description: 2-Way F 1.2 MCON Series(BK)

Terminal Part Information

Terminal Type ID	Terminated Lead	Diagnostic Test Probe	Terminal Removal Tool
I	Not required	No Tool Required	No Tool Required

B88DB Seat Belt Sensor - Driver

Pin	Size	Color	Circuit	Function	Terminal Type ID	Option
(1) 1	(1) —	(1) BK / OG	(1) 1363	(1) Driver Seat Belt Switch Low Reference	(1) I	(1) —
(2) 2	(2) —	(2) OG / GY	(2) 2652	(2) Driver Seat Belt Sensor Signal	(2) I	(2) —

B88LR Seat Belt Switch - Left Rear (UH5)

—

Connector Part Information

- Harness Type: 2nd Row Seat Wiring Harness - Left Cushion
- OEM Connector: Seat Belt Switch - Left Rear
- Service Connector: Service by Harness - See Part Catalog
- Description: 2-Way

Terminal Part Information

Terminal Type ID	Terminated Lead	Diagnostic Test Probe	Terminal Removal Tool
I	Not required	No Tool Required	No Tool Required

B88LR Seat Belt Switch - Left Rear (UH5)

Pin	Size	Color	Circuit	Function	Terminal Type ID	Option
(1) 1	(1) —	(1) BK / OG	(1) 1363	(1) Driver Seat Belt Switch Low Reference	(1) I	(1) —
(2) 2	(2) —	(2) YE / OG	(2) 5161	(2) Left Rear Seat Belt Switch Signal	(2) I	(2) —

B88MR Seat Belt Switch - Rear Middle (AT6 / ATT)

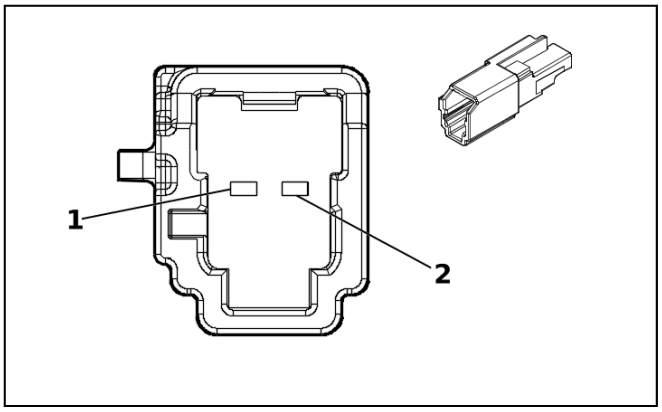

5360948

Connector Part Information
- Harness Type: 2nd Row Seat Wiring Harness - Left Cushion
- OEM Connector: 13530129
- Service Connector: Service by Harness - See Part Catalog
- Description: 2-Way M 1.2 MCON Series(GY)

Terminal Part Information

Terminal Type ID	Terminated Lead	Diagnostic Test Probe	Terminal Removal Tool
I	Not required	No Tool Required	No Tool Required

B88MR Seat Belt Switch - Rear Middle (AT6 / ATT)

Pin	Size	Color	Circuit	Function	Terminal Type ID	Option
(1) 1	(1) —	(1) BK / OG	(1) 1363	(1) Driver Seat Belt Switch Low Reference	(1) I	(1) —
(2) 2	(2) —	(2) BU / OG	(2) 5163	(2) Rear Center Seat Belt Switch Signal	(2) I	(2) —

B88P Seat Belt Switch - Passenger

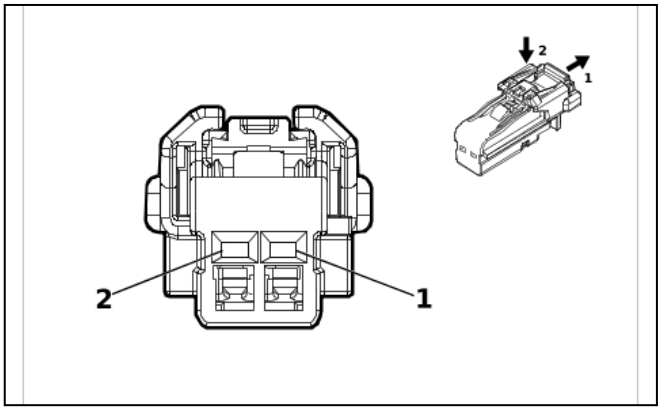

4115691

Connector Part Information
- Harness Type: Front Seat Wiring Harness - Passenger
- OEM Connector: 13532422
- Service Connector: Service by Harness - See Part Catalog
- Description: 2-Way F 1.2 MCON Series(BK)

Terminal Part Information

Terminal Type ID	Terminated Lead	Diagnostic Test Probe	Terminal Removal Tool
I	Not required	No Tool Required	No Tool Required

B88P Seat Belt Switch - Passenger

Pin	Size	Color	Circuit	Function	Terminal Type ID	Option
(1) 1	(1) —	(1) BK / OG	(1) 1363	(1) Driver Seat Belt Switch Low Reference	(1) I	(1) —
(2) 2	(2) —	(2) OG / VT	(2) 1362	(2) Passenger Seat Belt Switch Signal	(2) I	(2) —

B88RR Seat Belt Switch - Right Rear (UH5)

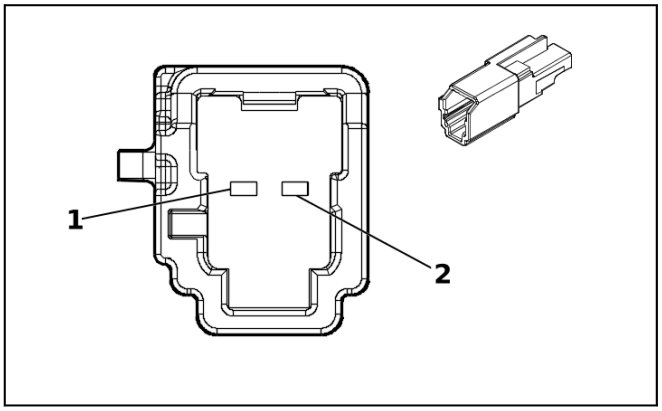

5360948

Connector Part Information

- Harness Type: 2nd Row Seat Wiring Harness - Right Cushion
- OEM Connector: 13530129
- Service Connector: Service by Harness - See Part Catalog
- Description: 2-Way M 1.2 MCON Series(GY)

Terminal Part Information

Terminal Type ID	Terminated Lead	Diagnostic Test Probe	Terminal Removal Tool
I	Not required	No Tool Required	No Tool Required

B88RR Seat Belt Switch - Right Rear (UH5)

Pin	Size	Color	Circuit	Function	Terminal Type ID	Option
(1) 1	(1) —	(1) BK / OG	(1) 1363	(1) Driver Seat Belt Switch Low Reference	(1) I	(1) —
(2) 2	(2) —	(2) BN / OG	(2) 5162	(2) Right Rear Seat Belt Switch Signal	(2) I	(2) —

B96 Cylinder Head Temperature Sensor (LZ0)

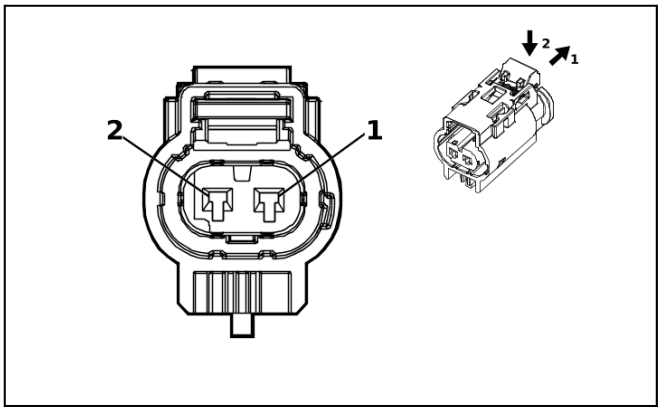

3747580

Connector Part Information
- Harness Type: Engine Wiring Harness
- OEM Connector: 10094236
- Service Connector: 19332627
- Description: 2-Way F 1.2 Multilock Series, Sealed(GY)

Terminal Part Information

Terminal Type ID	Terminated Lead	Diagnostic Test Probe	Terminal Removal Tool
I	Not required	J-35616-16 (L-GN)	No Tool Required

B96 Cylinder Head Temperature Sensor (LZ0)

Pin	Size	Color	Circuit	Function	Terminal Type ID	Option
(1) 1	(1) 0.5	(1) GN / YE	(1) 37	(1) Engine Block Temperature Sensor Signal	(1) I	(1) —
(2) 2	(2) 0.5	(2) BK / GN	(2) 580	(2) Engine Control Sensors Low Reference 2	(2) I	(2) —

B107 Accelerator Pedal Position Sensor

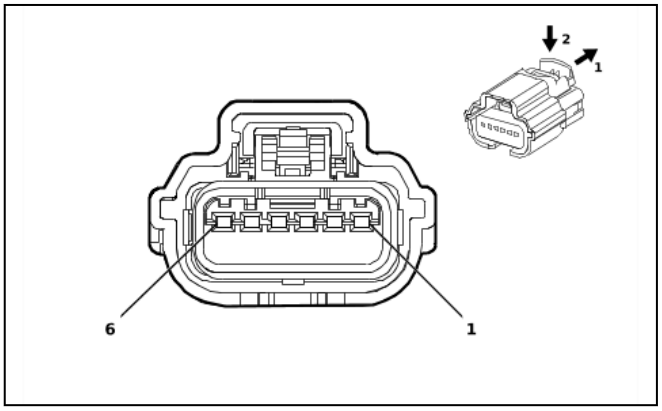

5157678

Connector Part Information
- Harness Type: Body Wiring Harness
- OEM Connector: 31404-7110
- Service Connector: 84773558
- Description: 6-Way F 64 Series, Sealed(BK)

Terminal Part Information

Terminal Type ID	Terminated Lead	Diagnostic Test Probe	Terminal Removal Tool
I	Not required	J-35616-64B (L-BU)	No Tool Required

B107 Accelerator Pedal Position Sensor

Pin	Size	Color	Circuit	Function	Terminal Type ID	Option
(1) 1	(1) 0.5	(1) WH / RD	(1) 1164	(1) Accelerator Pedal Position 5V Reference 1	(1) I	(1) —
(2) 2	(2) 0.5	(2) YE / WH	(2) 1161	(2) Accelerator Pedal Position Signal 1	(2) I	(2) —
(3) 3	(3) 0.5	(3) BK / BU	(3) 1271	(3) Accelerator Pedal Position Low Reference 1	(3) I	(3) —
(4) 4	(4) 0.5	(4) BK / VT	(4) 1272	(4) Accelerator Pedal Position Low Reference 2	(4) I	(4) —
(5) 5	(5) 0.5	(5) GN / WH	(5) 1162	(5) Accelerator Pedal Position Signal 2	(5) I	(5) —
(6) 6	(6) 0.5	(6) BN / RD	(6) 1274	(6) Accelerator Pedal Position 5V Reference 2	(6) I	(6) —

B110 Battery Monitor Module X1

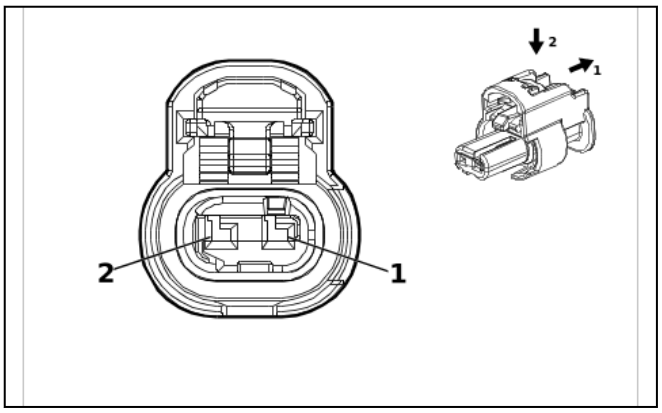

4649903

Connector Part Information

- Harness Type: Body Wiring Harness
- OEM Connector: 1-2296694-1
- Service Connector: 85761014
- Description: 2-Way F 1.2 MCON Series, Sealed(BK)

Terminal Part Information

Terminal Type ID	Terminated Lead	Diagnostic Test Probe	Terminal Removal Tool
I	Not required	J-35616-12 (BU)	No Tool Required

B110 Battery Monitor Module X1

Pin	Size	Color	Circuit	Function	Terminal Type ID	Option
(1) 1	(1) 0.35	(1) GN / YE	(1) 2855	(1) Body Control Module LIN Bus 9	(1) I	(1) —
(2) 2	(2) 0.75	(2) RD / YE	(2) 2340	(2) Battery Positive Voltage	(2) I	(2) —

B110 Battery Monitor Module X2

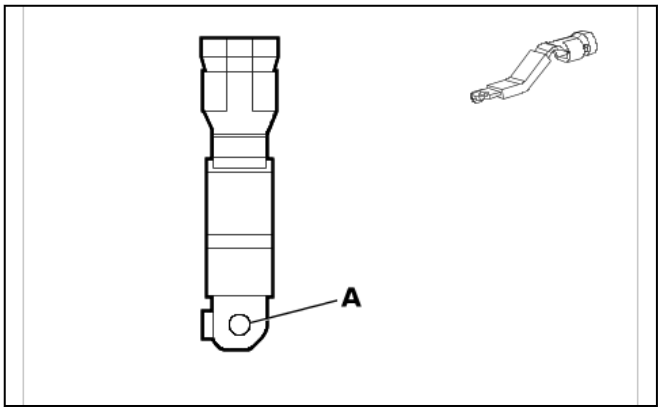

6458129

Connector Part Information
- Harness Type: Starter Solenoid Cable
- OEM Connector: 84892627
- Service Connector: Service by Cable Assembly — See Part Catalog
- Description: 1-Way Ring Terminal

Terminal Part Information

Terminal Type ID	Terminated Lead	Diagnostic Test Probe	Terminal Removal Tool
I	Not required	No Tool Required	No Tool Required

B110 Battery Monitor Module X2

Pin	Size	Color	Circuit	Function	Terminal Type ID	Option
A	35 35	BK BK	450 850	Ground Ground	I	— —

B110AX Battery Monitor Module - Auxiliary X1 (5W4 / 9C1)

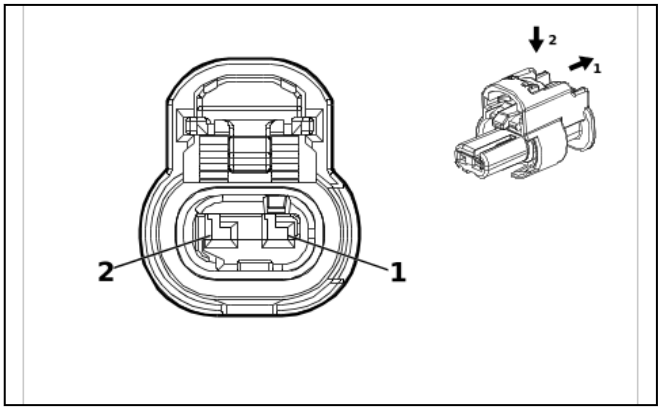

4649903

Connector Part Information
- Harness Type: Body Wiring Harness
- OEM Connector: 1-2296694-1
- Service Connector: 85761014
- Description: 2-Way F 1.2 MCON Series, Sealed(BK)

Terminal Part Information

Terminal Type ID	Terminated Lead	Diagnostic Test Probe	Terminal Removal Tool
I	Not required	J-35616-12 (BU)	No Tool Required

B110AX Battery Monitor Module - Auxiliary X1 (5W4 / 9C1)

Pin	Size	Color	Circuit	Function	Terminal Type ID	Option
(1) 1	(1) 0.35	(1) GN / VT	(1) 2860	(1) Body Control Module LIN Bus 14	(1) I	(1) —
(2) 2	(2) 0.75	(2) RD / YE	(2) 2340	(2) Battery Positive Voltage	(2) I	(2) —

B110AX Battery Monitor Module - Auxiliary X2 (5W4 / 9C1)

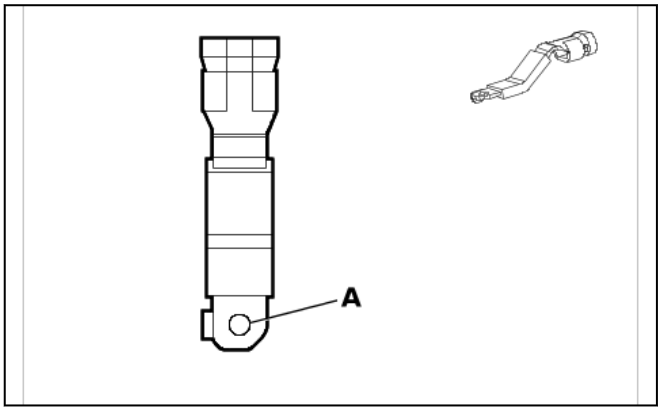

6458129

Connector Part Information

- Harness Type: Auxiliary Battery Negative Cable
- OEM Connector: 85580043
- Service Connector: Service by Cable Assembly — See Part Catalog
- Description: 1-Way Ring Terminal

Terminal Part Information

Terminal Type ID	Terminated Lead	Diagnostic Test Probe	Terminal Removal Tool
I	Not required	No Tool Required	No Tool Required

B110AX Battery Monitor Module - Auxiliary X2 (5W4 / 9C1)

Pin	Size	Color	Circuit	Function	Terminal Type ID	Option
A	35	BK	2550	Ground	I	—

B117A Windshield Outside Moisture/Ambient Light and Humidity Sensor

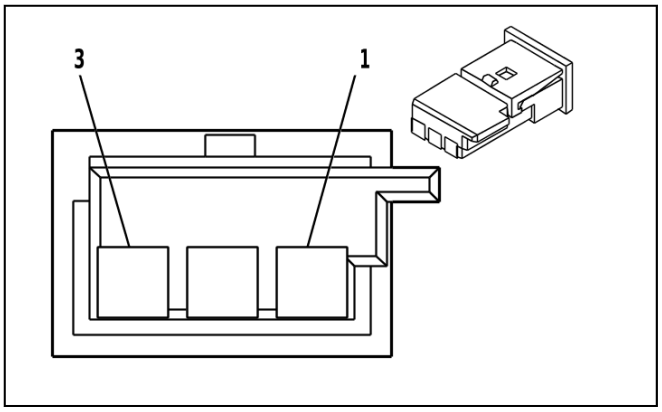

647970

Connector Part Information

- Harness Type: Headlamp Automatic Control Ambient Light Sensor Wiring Harness
- OEM Connector: 1-1718346-1
- Service Connector: Service by Harness - See Part Catalog
- Description: 3-Way F 0.64 Micro-Quadlock Series(BK)

Terminal Part Information

Terminal Type ID	Terminated Lead	Diagnostic Test Probe	Terminal Removal Tool
I	Not required	J-35616-64B (L-BU)	No Tool Required

B117A Windshield Outside Moisture/Ambient Light and Humidity Sensor

Pin	Size	Color	Circuit	Function	Terminal Type ID	Option
(1) 1	(1) 0.35	(1) RD / VT	(1) 240	(1) Battery Positive Voltage	(1) I	(1) —
(2) 2	(2) 0.35	(2) GN / BN	(2) 4115	(2) Body Control Module LIN Bus 5	(2) I	(2) —
(3) 3	(3) 0.35	(3) BK	(3) 850	(3) Ground	(3) I	(3) —

B118 Windshield Washer Solvent Container Level Sensor

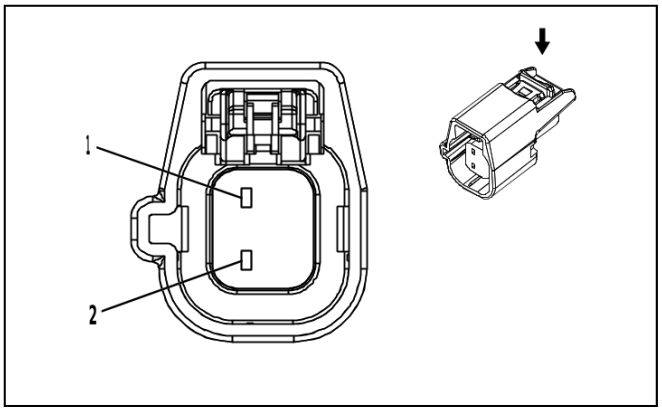

3958652

Connector Part Information
- Harness Type: Body Wiring Harness
- OEM Connector: 7287-8378-40
- Service Connector: 13593220
- Description: 2-Way F 1.5 Series, Sealed(L-GY)

Terminal Part Information

Terminal Type ID	Terminated Lead	Diagnostic Test Probe	Terminal Removal Tool
I	Not required	J-35616-14 (GN)	No Tool Required

B118 Windshield Washer Solvent Container Level Sensor

Pin	Size	Color	Circuit	Function	Terminal Type ID	Option
(1) 1	(1) 0.35	(1) VT	(1) 185	(1) Low Washer Fluid Indicator Control	(1) I	(1) —
(2) 2	(2) 0.75	(2) BK	(2) 150	(2) Ground	(2) I	(2) —

B130C Exhaust Gas Recirculation Temperature Sensor 3 (LZ0)

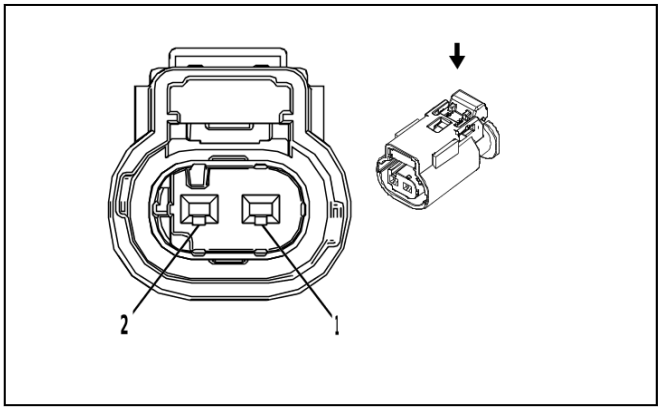

2830969

Connector Part Information
- Harness Type: Engine Wiring Harness
- OEM Connector: 10010339
- Service Connector: 13587321
- Description: 2-Way F 1.2 Multilock Series, Sealed(D-GY)

Terminal Part Information

Terminal Type ID	Terminated Lead	Diagnostic Test Probe	Terminal Removal Tool
I	Not required	J-35616-16 (L-GN)	No Tool Required

B130C Exhaust Gas Recirculation Temperature Sensor 3 (LZ0)

Pin	Size	Color	Circuit	Function	Terminal Type ID	Option
(1) 1	(1) 0.5	(1) BK / GN	(1) 3235	(1) Exhaust Gas Recirculation Temperature Sensor 3 Low Reference	(1) I	(1) —
(2) 2	(2) 0.5	(2) WH / GY	(2) 3234	(2) Exhaust Gas Recirculation Temperature Sensor 3 Signal	(2) I	(2) —

B136 Exhaust Particulate Matter Sensor (LZ0)

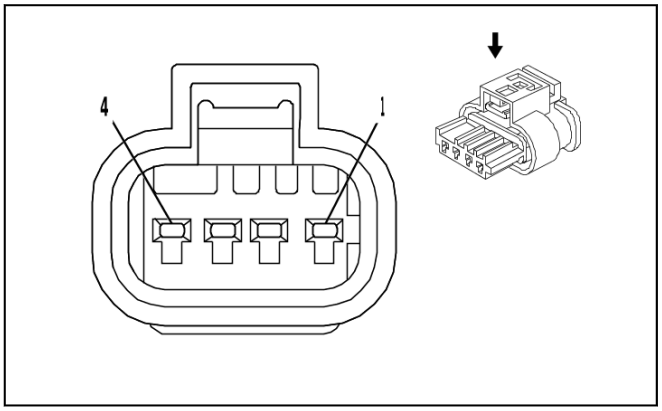

2487928

Connector Part Information

- Harness Type: Chassis Wiring Harness
- OEM Connector: 805-122-541
- Service Connector: 13581092
- Description: 4-Way F 1.2 Series, Sealed(BK)

Terminal Part Information

Terminal Type ID	Terminated Lead	Diagnostic Test Probe	Terminal Removal Tool
I	Not required	J-35616-16 (L-GN)	No Tool Required

B136 Exhaust Particulate Matter Sensor (LZ0)

Pin	Size	Color	Circuit	Function	Terminal Type ID	Option
(1) 1	(1) 1	(1) BK / WH	(1) 6151	(1) Engine Control Module Ground	(1) I	(1) —
(2) 2	(2) 0.5	(2) BU / GY	(2) 4054	(2) Private Serial Data Powertrain CAN Bus [-] Serial Data	(2) I	(2) —
(3) 3	(3) 0.5	(3) WH	(3) 4055	(3) Private Serial Data Powertrain CAN Bus [+] Serial Data	(3) I	(3) —
(4) 4	(4) 1	(4) VT / GN	(4) 4320	(4) Powertrain Sensor Bus Enable	(4) I	(4) —

B137B Power Steering Shaft Torque/Position Sensor

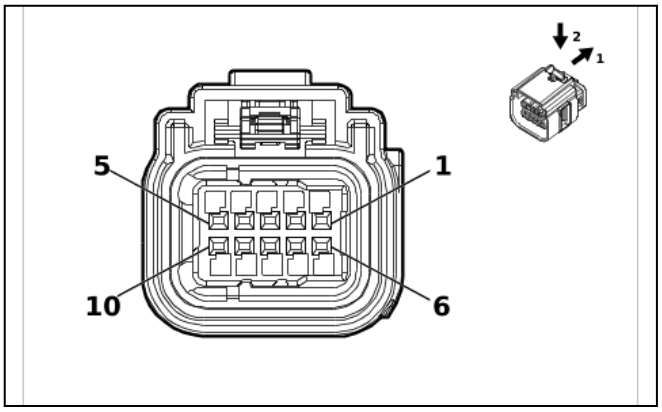

2748051

Connector Part Information

- Harness Type: Power Steering Control Module Wiring Harness
- OEM Connector: Not Available
- Service Connector: Service by Harness - See Part Catalog
- Description: 10-Way F 0.64 Series, Sealed(GY)

Terminal Part Information

Terminal Type ID	Terminated Lead	Diagnostic Test Probe	Terminal Removal Tool
I	Not required	No Tool Required	No Tool Required

B137B Power Steering Shaft Torque/Position Sensor

Pin	Size	Color	Circuit	Function	Terminal Type ID	Option
(1) 1	(1) —	(1) BU	(1) 8367	(1) Handwheel Channel A Torque Pressure Sensor 1 SENT Signal	(1) I	(1) —
(2) 2	(2) —	(2) RD	(2) 8366	(2) Handwheel Channel A High Reference	(2) I	(2) —
(3) 3	(3) —	(3) BK	(3) 8370	(3) Handwheel Channel A Low Reference	(3) I	(3) —
(4) 4	(4) —	(4) WH / RD	(4) 8371	(4) Handwheel Channel B High Reference	(4) I	(4) —
(5) 5	(5) —	(5) WH / BU	(5) 8372	(5) Handwheel Channel B Torque Pressure Sensor 1 SENT Signal	(5) I	(5) —
(6) 6	(6) —	(6) VT	(6) 8368	(6) Handwheel Channel A Torque Pressure Sensor 2 SENT Signal	(6) I	(6) —
(7) 7	(7) —	(7) OG	(7) 8369	(7) Handwheel Channel A Angle Position Sensor SENT Signal	(7) I	(7) —
(8) 8	(8) —	(8) GY	(8) 8375	(8) Handwheel Channel B Low Reference	(8) I	(8) —
(9) 9	(9) —	(9) YE	(9) 8374	(9) Handwheel Channel B Angle Position Sensor SENT Signal	(9) I	(9) —
(10) 10	(10) —	(10) GN	(10) 8373	(10) Handwheel Channel B Torque Pressure Sensor 2 SENT Signal	(10) I	(10) —

B139 Transfer Case Two/Four Wheel Drive Actuator Position Sensor (NP0 / NQH)

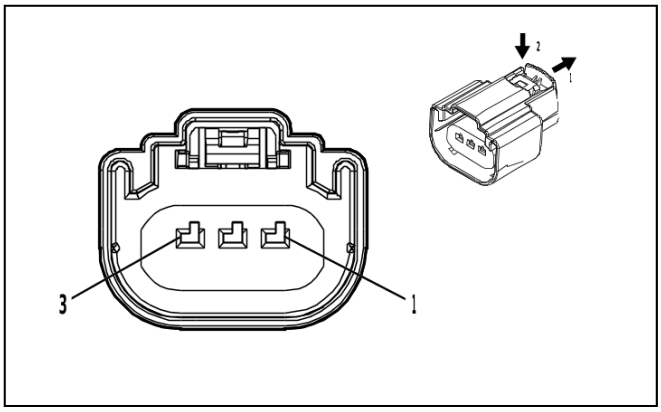

4569745

Connector Part Information

- Harness Type: Engine Wiring Harness
- OEM Connector: 160073-3105
- Service Connector: 19179750
- Description: 3-Way F 1.5 MX Series, Sealed(BK)

Terminal Part Information

Terminal Type ID	Terminated Lead	Diagnostic Test Probe	Terminal Removal Tool
I	Not required	J-35616-2A (GY)	No Tool Required

B139 Transfer Case Two/Four Wheel Drive Actuator Position Sensor (NP0 / NQH)

Pin	Size	Color	Circuit	Function	Terminal Type ID	Option
(1) 1	(1) 0.5	(1) WH / RD	(1) 7477	(1) Gear Position Sensor 5V Reference	(1) I	(1) —
(2) 2	(2) 0.5	(2) WH / GN	(2) 7479	(2) Rotary Position Sensor Signal	(2) I	(2) —
(3) 3	(3) 0.5	(3) YE / BK	(3) 7478	(3) Gear Position Sensor Low Reference	(3) I	(3) —

B150 Fuel Tank Pressure Sensor (L84 / L87)

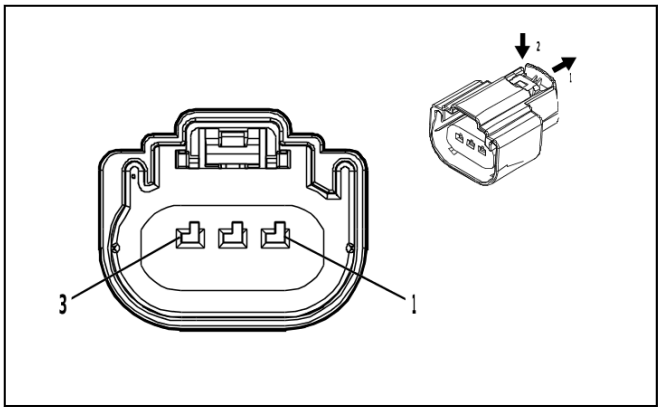

4589538

Connector Part Information

- Harness Type: Chassis Wiring Harness
- OEM Connector: 160073-3106
- Service Connector: 84569854
- Description: 3-Way F 1.5 MX Series, Sealed(GY)

Terminal Part Information

Terminal Type ID	Terminated Lead	Diagnostic Test Probe	Terminal Removal Tool
I	Not required	J-35616-14 (GN)	No Tool Required

B150 Fuel Tank Pressure Sensor (L84 / L87)

Pin	Size	Color	Circuit	Function	Terminal Type ID	Option
(1) 1	(1) 0.5	(1) BU	(1) 890	(1) Fuel Tank Pressure Sensor Signal	(1) I	(1) —
(2) 2	(2) 0.5	(2) BK / BN	(2) 6284	(2) Fuel Tank Pressure Sensor Low Reference	(2) I	(2) —
(3) 3	(3) 0.5	(3) YE / RD	(3) 2709	(3) Fuel Tank Pressure Sensor 5V Reference	(3) I	(3) —

B159BL Body Side Rear Window Glass Breakage Sensor - Left (UTU / UTV)

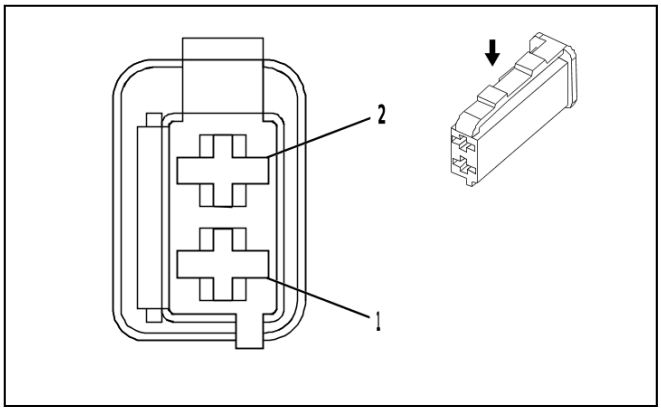

2339593

Connector Part Information
- Harness Type: Body Wiring Harness
- OEM Connector: 1563189-1
- Service Connector: 13580951
- Description: 2-Way F 1.6 Timer Series(BK)

Terminal Part Information

Terminal Type ID	Terminated Lead	Diagnostic Test Probe	Terminal Removal Tool
I	Not required	J-35616-14 (GN)	No Tool Required

B159BL Body Side Rear Window Glass Breakage Sensor - Left (UTU / UTV)

Pin	Size	Color	Circuit	Function	Terminal Type ID	Option
(1) 1	(1) 0.5	(1) BU / VT	(1) 7597	(1) Glass Breakage Sensor Signal	(1) I	(1) —
(2) 2	(2) 0.35	(2) VT / BU	(2) 7598	(2) Glass Breakage Sensor 2 Signal	(2) I	(2) —

B159BR Body Side Rear Window Glass Breakage Sensor - Right (UTU / UTV)

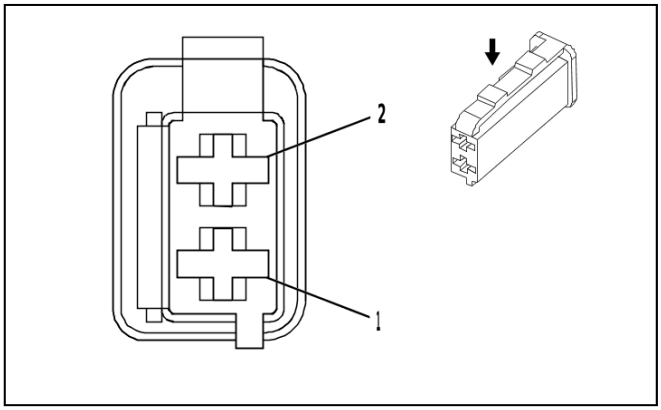

2339593

Connector Part Information
- Harness Type: Body Wiring Harness
- OEM Connector: 1563189-1
- Service Connector: 13580951
- Description: 2-Way F 1.6 Timer Series(BK)

Terminal Part Information

Terminal Type ID	Terminated Lead	Diagnostic Test Probe	Terminal Removal Tool
I	Not required	J-35616-14 (GN)	No Tool Required

B159BR Body Side Rear Window Glass Breakage Sensor - Right (UTU / UTV)

Pin	Size	Color	Circuit	Function	Terminal Type ID	Option
(1) 1	(1) 0.5	(1) YE / BK	(1) 2930	(1) Glass Breakage Sensor Supply Voltage	(1) I	(1) —
(2) 2	(2) 0.5	(2) BU / VT	(2) 7597	(2) Glass Breakage Sensor Signal	(2) I	(2) —

B161LF Electronic Suspension Wheel Front Vertical Accelerometer - Left (Z95)

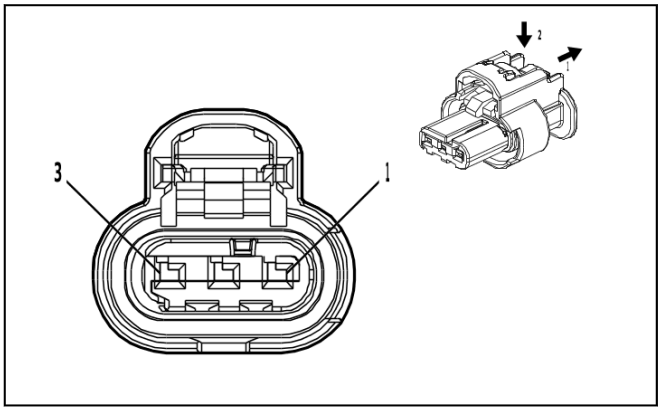

4778903

Connector Part Information

- Harness Type: Chassis Wiring Harness
- OEM Connector: 1-2296695-2
- Service Connector: 86792095
- Description: 3-Way F 1.2 MCON-CB Series, Sealed(BK)

Terminal Part Information

Terminal Type ID	Terminated Lead	Diagnostic Test Probe	Terminal Removal Tool
I	Not required	J-35616-16 (L-GN)	No Tool Required

B161LF Electronic Suspension Wheel Front Vertical Accelerometer - Left (Z95)

Pin	Size	Color	Circuit	Function	Terminal Type ID	Option
(1) 1	(1) 0.5	(1) YE / RD	(1) 1817	(1) Left Front Vertical Suspension Acceleration Sensor Voltage Reference	(1) I	(1) —
(2) 2	(2) 0.5	(2) BK / BN	(2) 1099	(2) Left Front Vertical Suspension Acceleration Sensor Low Reference	(2) I	(2) —
(3) 3	(3) 0.5	(3) WH	(3) 1100	(3) Left Front Vertical Suspension Acceleration Sensor Signal	(3) I	(3) —

B161RF Electronic Suspension Wheel Front Vertical Accelerometer - Right (Z95)

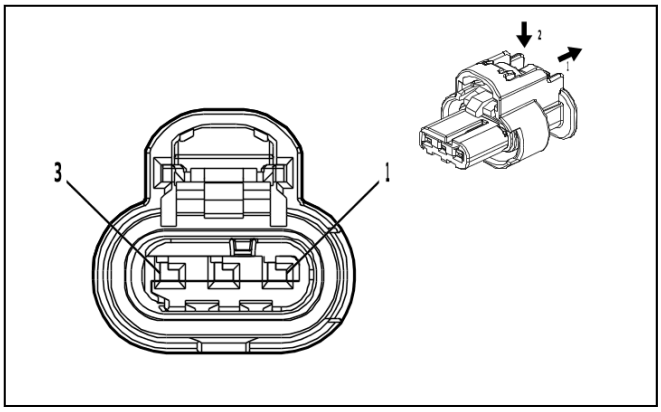

4778903

Connector Part Information

- Harness Type: Chassis Wiring Harness
- OEM Connector: 1-2296695-2
- Service Connector: 86792095
- Description: 3-Way F 1.2 MCON-CB Series, Sealed(BK)

Terminal Part Information

Terminal Type ID	Terminated Lead	Diagnostic Test Probe	Terminal Removal Tool
I	Not required	J-35616-16 (L-GN)	No Tool Required

B161RF Electronic Suspension Wheel Front Vertical Accelerometer - Right (Z95)

Pin	Size	Color	Circuit	Function	Terminal Type ID	Option
(1) 1	(1) 0.5	(1) BN / RD	(1) 1819	(1) Right Front Vertical Suspension Acceleration Sensor Voltage Reference	(1) I	(1) —
(2) 2	(2) 0.5	(2) BK / GN	(2) 1105	(2) Right Front Vertical Suspension Acceleration Sensor Low Reference	(2) I	(2) —
(3) 3	(3) 0.5	(3) WH	(3) 1106	(3) Right Front Vertical Suspension Acceleration Sensor Signal	(3) I	(3) —

B162LR Electronic Suspension Rear Vertical Accelerometer - Left (Z95)

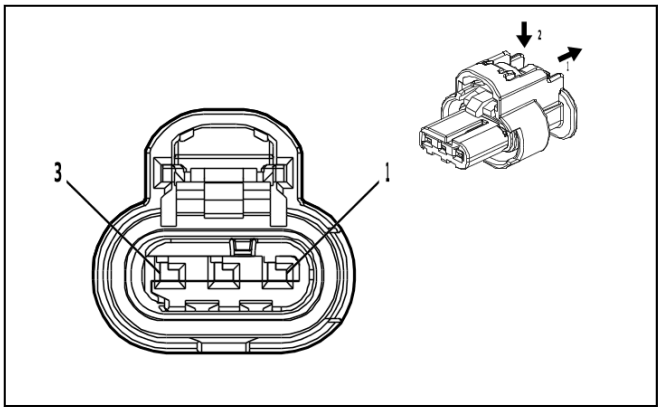

4778903

Connector Part Information

- Harness Type: Chassis Wiring Harness
- OEM Connector: 1-2296695-2
- Service Connector: 86792095
- Description: 3-Way F 1.2 MCON-CB Series, Sealed(BK)

Terminal Part Information

Terminal Type ID	Terminated Lead	Diagnostic Test Probe	Terminal Removal Tool
I	Not required	J-35616-16 (L-GN)	No Tool Required

B162LR Electronic Suspension Rear Vertical Accelerometer - Left (Z95)

Pin	Size	Color	Circuit	Function	Terminal Type ID	Option
(1) 1	(1) 0.5	(1) VT / RD	(1) 1818	(1) Left Rear Vertical Suspension Acceleration Sensor Voltage Reference	(1) I	(1) —
(2) 2	(2) 0.5	(2) BK / VT	(2) 1833	(2) Left Rear Vertical Suspension Acceleration Sensor Low Reference	(2) I	(2) —
(3) 3	(3) 0.5	(3) YE / BN	(3) 1103	(3) Left Rear Vertical Suspension Acceleration Sensor Signal	(3) I	(3) —

B162RR Electronic Suspension Rear Vertical Accelerometer - Right (Z95)

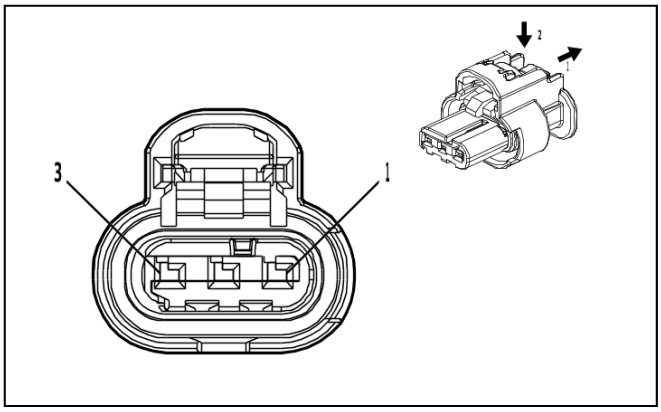

4778903

Connector Part Information

- Harness Type: Chassis Wiring Harness
- OEM Connector: 1-2296695-2
- Service Connector: 86792095
- Description: 3-Way F 1.2 MCON-CB Series, Sealed(BK)

Terminal Part Information

Terminal Type ID	Terminated Lead	Diagnostic Test Probe	Terminal Removal Tool
I	Not required	J-35616-16 (L-GN)	No Tool Required

B162RR Electronic Suspension Rear Vertical Accelerometer - Right (Z95)

Pin	Size	Color	Circuit	Function	Terminal Type ID	Option
(1) 1	(1) 0.5	(1) GY / RD	(1) 1820	(1) Right Rear Vertical Suspension Acceleration Sensor Voltage Reference	(1) I	(1) —
(2) 2	(2) 0.5	(2) BK / BU	(2) 1108	(2) Right Rear Vertical Suspension Acceleration Sensor Low Reference	(2) I	(2) —
(3) 3	(3) 0.5	(3) YE / BU	(3) 1109	(3) Right Rear Vertical Suspension Acceleration Sensor Signal	(3) I	(3) —

B166LFB Advanced Parking Assist Alarm Side Sensor - Left Front (UKZ)

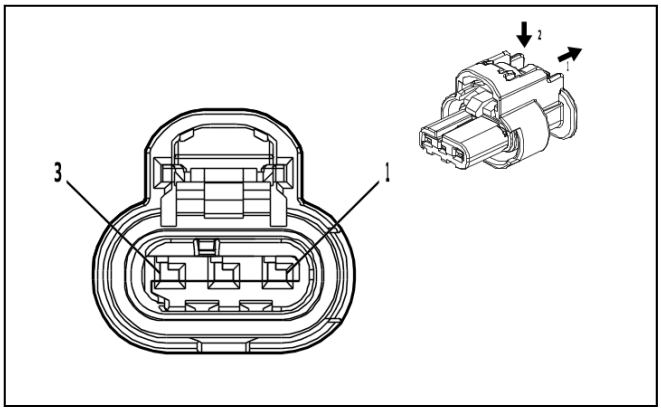

4994602

Connector Part Information

- Harness Type: Front Object Alarm Sensor Wiring Harness
- OEM Connector: 1-2296695-3
- Service Connector: Service by Harness - See Part Catalog
- Description: 3-Way F 1.2 MCON-CB Series, Sealed(BK)

Terminal Part Information

Terminal Type ID	Terminated Lead	Diagnostic Test Probe	Terminal Removal Tool
I	Not required	J-35616-16 (L-GN)	No Tool Required

B166LFB Advanced Parking Assist Alarm Side Sensor - Left Front (UKZ)

Pin	Size	Color	Circuit	Function	Terminal Type ID	Option
(1) 1	(1) 0.5	(1) BN	(1) 6581	(1) Front Parking Assist Display Control	(1) I	(1) —
(2) 2	(2) 0.5	(2) GY	(2) 3154	(2) Left Front Advanced Parking Assist Side Object Sensor Signal	(2) I	(2) —
(3) 3	(3) 0.5	(3) BK / BU	(3) 5214	(3) Front Parking Assist Sensor Low Reference	(3) I	(3) —

B166LRB Advanced Parking Assist Alarm Rear Side Sensor - Left (UKZ)

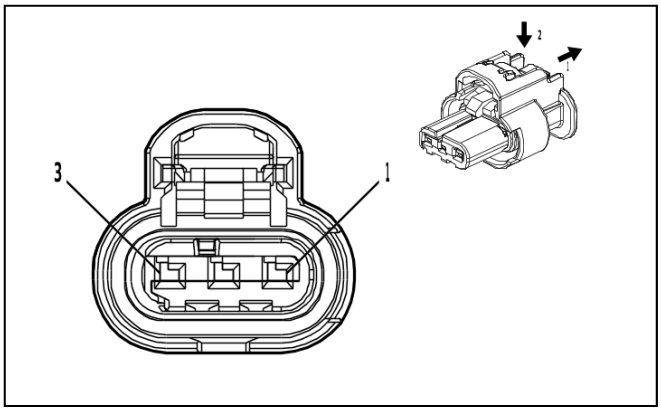

4994602

Connector Part Information

- Harness Type: Rear Object Alarm Sensor Wiring Harness
- OEM Connector: 1-2296695-3
- Service Connector: Service by Harness - See Part Catalog
- Description: 3-Way F 1.2 MCON-CB Series, Sealed(BK)

Terminal Part Information

Terminal Type ID	Terminated Lead	Diagnostic Test Probe	Terminal Removal Tool
I	Not required	J-35616-16 (L-GN)	No Tool Required

B166LRB Advanced Parking Assist Alarm Rear Side Sensor - Left (UKZ)

Pin	Size	Color	Circuit	Function	Terminal Type ID	Option
(1) 1	(1) 0.5	(1) BN / WH	(1) 2374	(1) Object Sensor Voltage Reference	(1) I	(1) —
(2) 2	(2) 0.5	(2) GN	(2) 3156	(2) Left Rear Advanced Parking Assist Side Object Sensor Signal	(2) I	(2) —
(3) 3	(3) 0.5	(3) BK / GY	(3) 2379	(3) Object Sensor Low Reference	(3) I	(3) —

B166RFB Advanced Parking Assist Alarm Side Sensor - Right Front (UKZ)

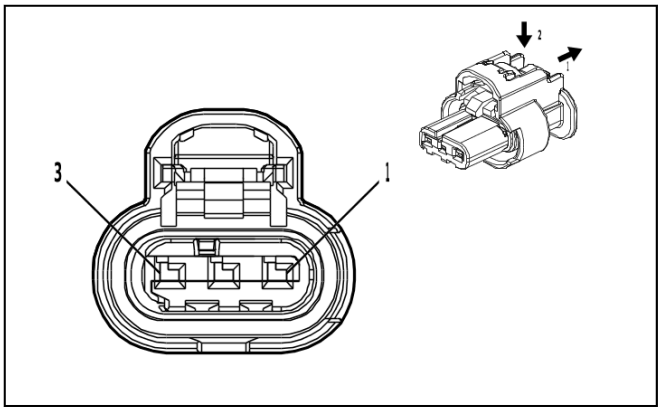

4994602

Connector Part Information

- Harness Type: Front Object Alarm Sensor Wiring Harness
- OEM Connector: 1-2296695-3
- Service Connector: Service by Harness - See Part Catalog
- Description: 3-Way F 1.2 MCON-CB Series, Sealed(BK)

Terminal Part Information

Terminal Type ID	Terminated Lead	Diagnostic Test Probe	Terminal Removal Tool
I	Not required	J-35616-16 (L-GN)	No Tool Required

B166RFB Advanced Parking Assist Alarm Side Sensor - Right Front (UKZ)

Pin	Size	Color	Circuit	Function	Terminal Type ID	Option
(1) 1	(1) 0.5	(1) BN	(1) 6581	(1) Front Parking Assist Display Control	(1) I	(1) —
(2) 2	(2) 0.5	(2) GN	(2) 3155	(2) Right Front Advanced Parking Assist Side Object Sensor Signal	(2) I	(2) —
(3) 3	(3) 0.5	(3) BK / BU	(3) 5214	(3) Front Parking Assist Sensor Low Reference	(3) I	(3) —

B166RRB Advanced Parking Assist Alarm Rear Side Sensor - Right (UKZ)

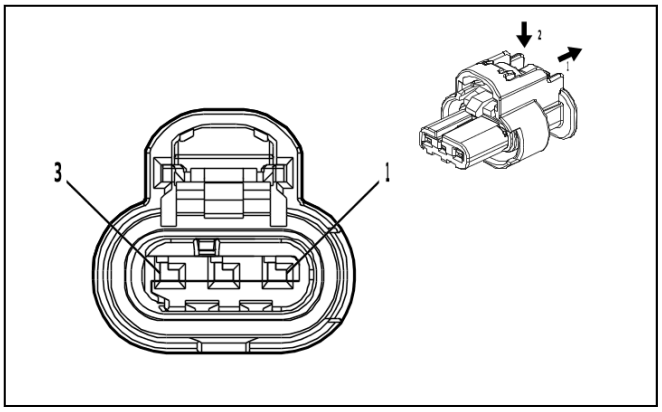

4994602

Connector Part Information

- Harness Type: Rear Object Alarm Sensor Wiring Harness
- OEM Connector: 1-2296695-3
- Service Connector: Service by Harness - See Part Catalog
- Description: 3-Way F 1.2 MCON-CB Series, Sealed(BK)

Terminal Part Information

Terminal Type ID	Terminated Lead	Diagnostic Test Probe	Terminal Removal Tool
I	Not required	J-35616-16 (L-GN)	No Tool Required

B166RRB Advanced Parking Assist Alarm Rear Side Sensor - Right (UKZ)

Pin	Size	Color	Circuit	Function	Terminal Type ID	Option
(1) 1	(1) 0.5	(1) BN / WH	(1) 2374	(1) Object Sensor Voltage Reference	(1) I	(1) —
(2) 2	(2) 0.5	(2) BU	(2) 3157	(2) Right Rear Advanced Parking Assist Side Object Sensor Signal	(2) I	(2) —
(3) 3	(3) 0.5	(3) BK / GY	(3) 2379	(3) Object Sensor Low Reference	(3) I	(3) —

B172LF Front Disc Brake Pad Wear Sensor - Left (JBK)

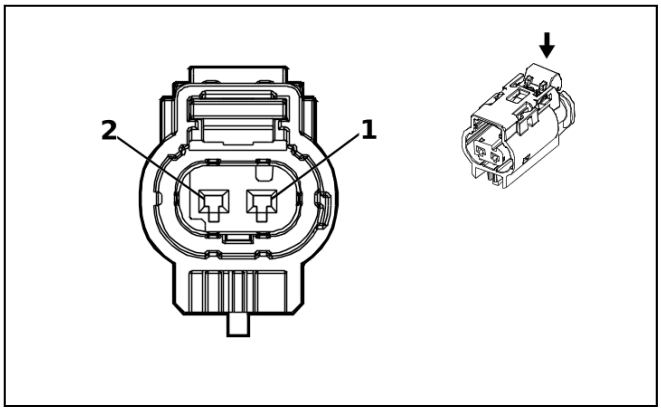

3747581

Connector Part Information
- Harness Type: Chassis Wiring Harness
- OEM Connector: 10094234
- Service Connector: 84727362
- Description: 2-Way F 1.2 Multilock Series, Sealed(BK)

Terminal Part Information

Terminal Type ID	Terminated Lead	Diagnostic Test Probe	Terminal Removal Tool
I	Not required	J-35616-12 (BU)	No Tool Required
II	Not required	J-35616-16 (L-GN)	No Tool Required

B172LF Front Disc Brake Pad Wear Sensor - Left (JBK)

Pin	Size	Color	Circuit	Function	Terminal Type ID	Option
(1) 1	(1) 0.75	(1) BN / BU	(1) 1602	(1) Front Brake Pad Wear Sensor Signal	(1) I	(1) —
(2) 2	(2) 0.75	(2) BK	(2) 2050	(2) Ground	(2) II	(2) —

B172LR Rear Disc Brake Pad Wear Sensor - Left (JKB)

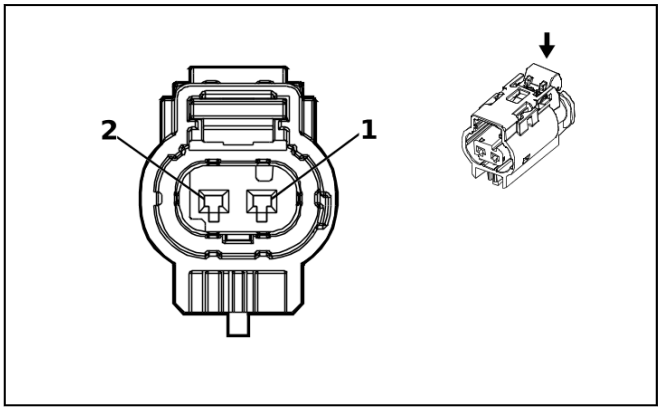

3747581

Connector Part Information
- Harness Type: Chassis Rear Wiring Harness Extension Harness - Left
- OEM Connector: 10094234
- Service Connector: Service by Harness - See Part Catalog
- Description: 2-Way F 1.2 Multilock Series, Sealed(BK)

Terminal Part Information

Terminal Type ID	Terminated Lead	Diagnostic Test Probe	Terminal Removal Tool
I	Not required	J-35616-16 (L-GN)	No Tool Required

B172LR Rear Disc Brake Pad Wear Sensor - Left (JKB)

Pin	Size	Color	Circuit	Function	Terminal Type ID	Option
(1) 1	(1) 0.75	(1) GN / YE	(1) 1616	(1) Rear Brake Pad Wear Sensor Signal	(1) I	(1) —
(2) 2	(2) 0.75	(2) BK	(2) 2050	(2) Ground	(2) I	(2) —

B174G Front View Driver Information Camera - Grille

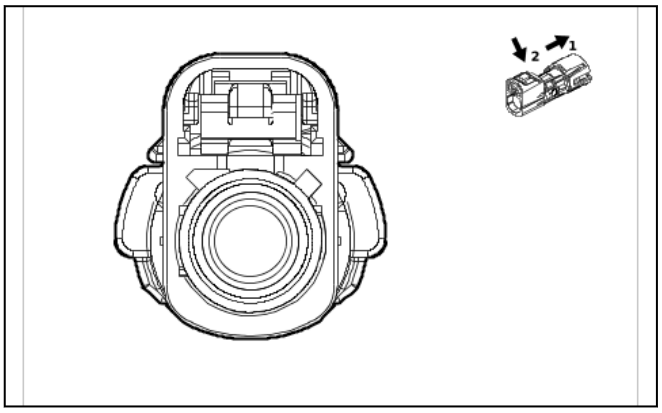

5758030

Connector Part Information

- Harness Type: Front Object Alarm Sensor Wiring Harness COAX
- OEM Connector: 35187032
- Service Connector: Service by Cable Assembly — See Part Catalog
- Description: 1-Way F Coax Type(BK)

Terminal Part Information

Terminal Type ID	Terminated Lead	Diagnostic Test Probe	Terminal Removal Tool
I	Not required	No Tool Required	No Tool Required

B174G Front View Driver Information Camera - Grille

Pin	Size	Color	Circuit	Function	Terminal Type ID	Option
—	—	Coax Cable	—	Front Vision Camera 1 Coaxial Video Signal	I	—

B174W Front View Camera - Windshield ((UGN / UHY) - UKL)

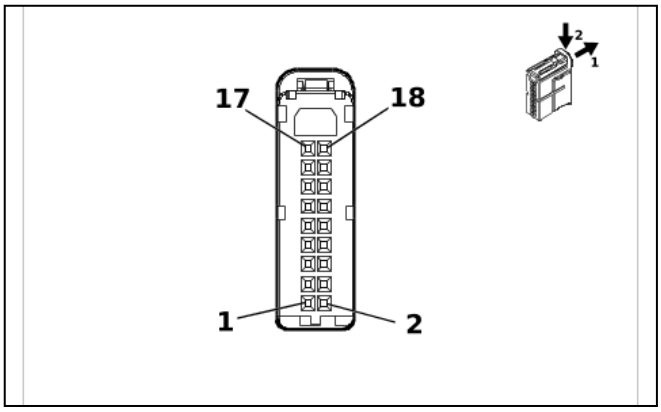

6177962

Connector Part Information

- Harness Type: Headlining Trim Panel Harness
- OEM Connector: 2312118-1
- Service Connector: 13543041
- Description: 18-Way F 0.5 GEN 50 Series(BK)

Terminal Part Information

Terminal Type ID	Terminated Lead	Diagnostic Test Probe	Terminal Removal Tool
I	19370262	EL-35616-58 (BK)	EL-38125-58
II	Service by Cable	EL-35616-58 (BK)	EL-38125-58

B174W Front View Camera - Windshield ((UGN / UHY) - UKL)

Pin	Size	Color	Circuit	Function	Terminal Type ID	Option
(1) 1	(1) 0.35	(1) BN / WH	(1) 7209	(1) Ethernet Bus 3 [+]	(1) II	(1) —
2	—	—	—	Not Occupied	—	—
(3) 3	(3) 0.35	(3) BN	(3) 7208	(3) Ethernet Bus 3 [-]	(3) II	(3) —
4 - 6	—	—	—	Not Occupied	—	—
(7) 7	(7) 0.35	(7) BU / YE	(7) 4979	(7) AUTOSAR CAN Bus [+] 2 Serial Data	(7) I	(7) —
(8) 8	(8) 0.35	(8) BU / YE	(8) 4979	(8) AUTOSAR CAN Bus [+] 2 Serial Data	(8) I	(8) —
(9) 9	(9) 0.35	(9) WH	(9) 4978	(9) AUTOSAR CAN Bus [-] 2 Serial Data	(9) I	(9) —
(10) 10	(10) 0.35	(10) WH	(10) 4978	(10) AUTOSAR CAN Bus [-] 2 Serial Data	(10) I	(10) —
(11) 11	(11) 0.35	(11) BK / WH	(11) 1851	(11) Signal Ground	(11) I	(11) —
12	—	—	—	Not Occupied	—	—
(13) 13	(13) 0.35	(13) BU / GY	(13) 4105	(13) AUTOSAR CAN Bus [+] 8 Serial Data	(13) I	(13) —
14	—	—	—	Not Occupied	—	—
(15) 15	(15) 0.35	(15) WH / GY	(15) 4104	(15) AUTOSAR CAN Bus [-] 8 Serial Data	(15) I	(15) —

Pin	Size	Color	Circuit	Function	Terminal Type ID	Option
16 - 17	—	—	—	Not Occupied	—	—
(18) 18	(18) 0.35	(18) RD / YE	(18) 240	(18) Battery Positive Voltage	(18) I	(18) —

B174W Front View Camera - Windshield (UKL)

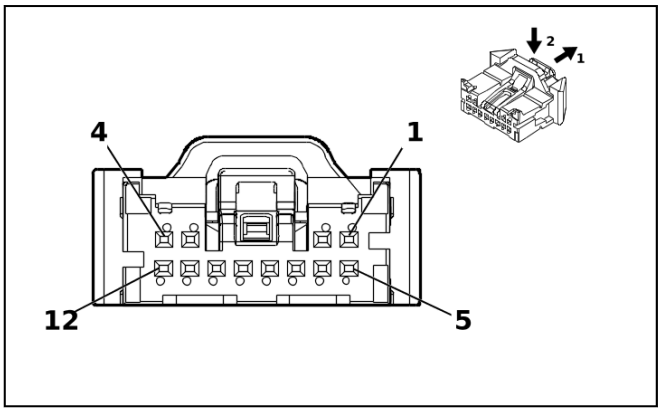

5360826

Connector Part Information

- Harness Type: Headlining Trim Panel Harness
- OEM Connector: 35068239
- Service Connector: 13529935
- Description: 12-Way F 050 CTS Series(BK)

Terminal Part Information

Terminal Type ID	Terminated Lead	Diagnostic Test Probe	Terminal Removal Tool
I	84944580	EL-35616-58 (BK)	EL-38125-58

B174W Front View Camera - Windshield (UKL)

Pin	Size	Color	Circuit	Function	Terminal Type ID	Option
(1) 1	(1) 0.35	(1) BK / WH	(1) 1851	(1) Signal Ground	(1) I	(1) —
2	—	—	—	Not Occupied	—	—
(3) 3	(3) 0.35	(3) RD / YE	(3) 240	(3) Battery Positive Voltage	(3) I	(3) —
4	—	—	—	Not Occupied	—	—
(5) 5	(5) 0.35	(5) BU / GY	(5) 4105	(5) AUTOSAR CAN Bus [+] 8 Serial Data	(5) I	(5) —
(6) 6	(6) 0.35	(6) WH / GY	(6) 4104	(6) AUTOSAR CAN Bus [-] 8 Serial Data	(6) I	(6) —
(7) 7	(7) 0.35	(7) BU / GY	(7) 4105	(7) AUTOSAR CAN Bus [+] 8 Serial Data	(7) I	(7) —
(8) 8	(8) 0.35	(8) WH / GY	(8) 4104	(8) AUTOSAR CAN Bus [-] 8 Serial Data	(8) I	(8) —
9 - 12	—	—	—	Not Occupied	—	—

B193A Charge Air Cooler Air Temperature Sensor - Inlet (LZ0)

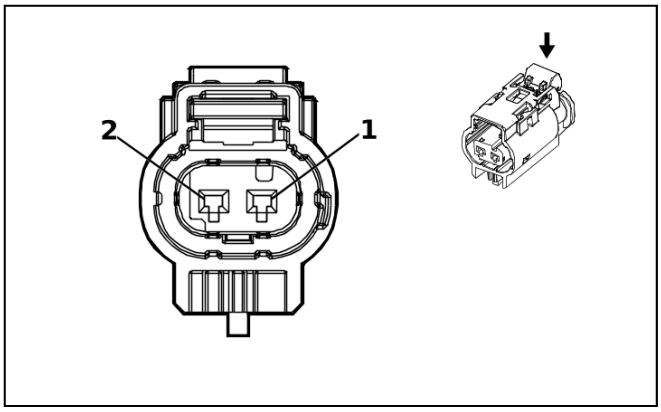

3747581

Connector Part Information
- Harness Type: Engine Wiring Harness
- OEM Connector: 10094234
- Service Connector: 84727362
- Description: 2-Way F 1.2 Multilock Series, Sealed(BK)

Terminal Part Information

Terminal Type ID	Terminated Lead	Diagnostic Test Probe	Terminal Removal Tool
I	Not required	J-35616-16 (L-GN)	No Tool Required

B193A Charge Air Cooler Air Temperature Sensor - Inlet (LZ0)

Pin	Size	Color	Circuit	Function	Terminal Type ID	Option
(1) 1	(1) 0.5	(1) GN	(1) 3683	(1) Charge Air Cooler Inlet Temperature Sensor Signal	(1) I	(1) —
(2) 2	(2) 0.5	(2) YE / BK	(2) 3682	(2) Charge Air Cooler Inlet Temperature Sensor Low Reference	(2) I	(2) —

B193B Charge Air Cooler Air Temperature Sensor - Outlet (LZ0)

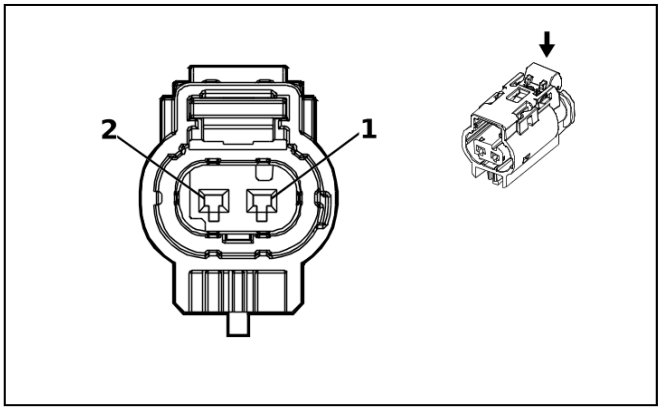

3747581

Connector Part Information
- Harness Type: Engine Wiring Harness
- OEM Connector: 10094234
- Service Connector: 84727362
- Description: 2-Way F 1.2 Multilock Series, Sealed(BK)

Terminal Part Information

Terminal Type ID	Terminated Lead	Diagnostic Test Probe	Terminal Removal Tool
I	Not required	J-35616-16 (L-GN)	No Tool Required

B193B Charge Air Cooler Air Temperature Sensor - Outlet (LZ0)

Pin	Size	Color	Circuit	Function	Terminal Type ID	Option
(1) 1	(1) 0.5	(1) BN	(1) 3681	(1) Charge Air Cooler Outlet Temperature Sensor Signal	(1) I	(1) —
(2) 2	(2) 0.5	(2) YE / BU	(2) 3680	(2) Charge Air Cooler Outlet Temperature Sensor Low Reference	(2) I	(2) —

B195A Nitrogen Oxides Sensor 1 (LZ0)

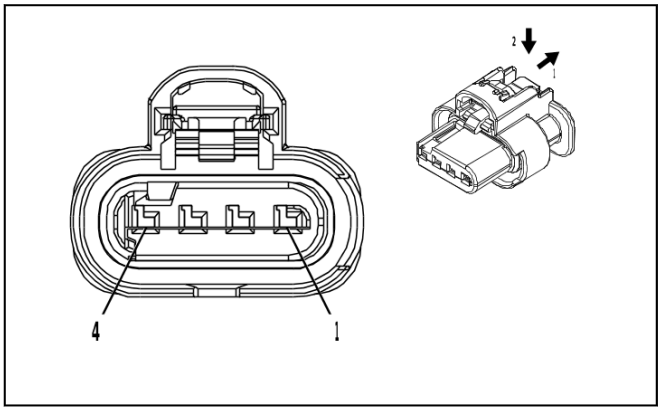

4210809

Connector Part Information

- Harness Type: Engine Wiring Harness
- OEM Connector: 1-2296696-1
- Service Connector: 85518225
- Description: 4-Way F 1.2 MCON-CB Series, Sealed(BK)

Terminal Part Information

Terminal Type ID	Terminated Lead	Diagnostic Test Probe	Terminal Removal Tool
I	Not required	J-35616-16 (L-GN)	No Tool Required

B195A Nitrogen Oxides Sensor 1 (LZ0)

Pin	Size	Color	Circuit	Function	Terminal Type ID	Option
(1) 1	(1) 1	(1) VT / GN	(1) 4320	(1) Powertrain Sensor Bus Enable	(1) I	(1) —
(2) 2	(2) 0.5	(2) WH	(2) 4055	(2) Private Serial Data Powertrain CAN Bus [+] Serial Data	(2) I	(2) —
(3) 3	(3) 0.5	(3) BU / GY	(3) 4054	(3) Private Serial Data Powertrain CAN Bus [-] Serial Data	(3) I	(3) —
(4) 4	(4) 1	(4) BK / WH	(4) 6151	(4) Engine Control Module Ground	(4) I	(4) —

B195B Nitrogen Oxides Sensor 2 (LZ0)

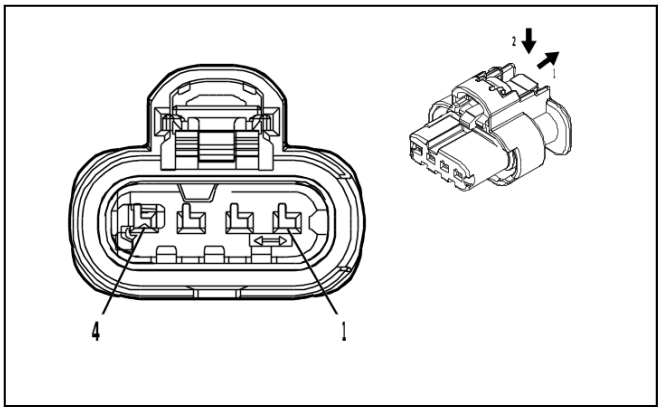

4934614

Connector Part Information

- Harness Type: Chassis Wiring Harness
- OEM Connector: 1-2296696-2
- Service Connector: 85519071
- Description: 4-Way F 1.2 MCON-CB Series, Sealed(BK)

Terminal Part Information

Terminal Type ID	Terminated Lead	Diagnostic Test Probe	Terminal Removal Tool
I	Not required	J-35616-16 (L-GN)	No Tool Required

B195B Nitrogen Oxides Sensor 2 (LZ0)

Pin	Size	Color	Circuit	Function	Terminal Type ID	Option
(1) 1	(1) 1	(1) VT / GN	(1) 4320	(1) Powertrain Sensor Bus Enable	(1) I	(1) —
(2) 2	(2) 0.5	(2) WH	(2) 4055	(2) Private Serial Data Powertrain CAN Bus [+] Serial Data	(2) I	(2) —
(3) 3	(3) 0.5	(3) BU / GY	(3) 4054	(3) Private Serial Data Powertrain CAN Bus [-] Serial Data	(3) I	(3) —
(4) 4	(4) 1	(4) BK / WH	(4) 6151	(4) Engine Control Module Ground	(4) I	(4) —

B195C Nitrogen Oxides Sensor 3 (LZ0)

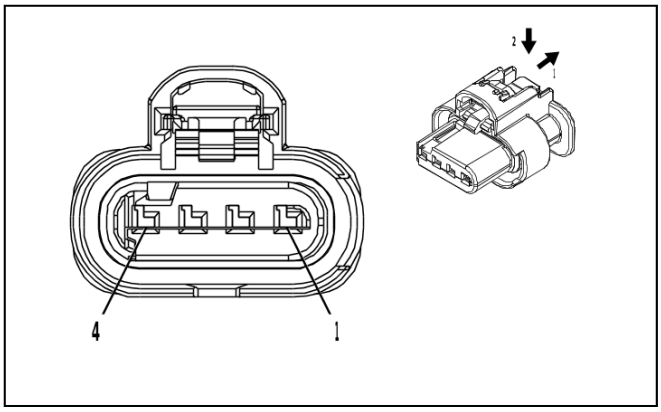

4210809

Connector Part Information

- Harness Type: Chassis Wiring Harness
- OEM Connector: 1-2296696-1
- Service Connector: 85518225
- Description: 4-Way F 1.2 MCON-CB Series, Sealed(BK)

Terminal Part Information

Terminal Type ID	Terminated Lead	Diagnostic Test Probe	Terminal Removal Tool
I	Not required	J-35616-16 (L-GN)	No Tool Required

B195C Nitrogen Oxides Sensor 3 (LZ0)

Pin	Size	Color	Circuit	Function	Terminal Type ID	Option
(1) 1	(1) 1	(1) VT / GN	(1) 4320	(1) Powertrain Sensor Bus Enable	(1) I	(1) —
(2) 2	(2) 0.5	(2) WH	(2) 4055	(2) Private Serial Data Powertrain CAN Bus [+] Serial Data	(2) I	(2) —
(3) 3	(3) 0.5	(3) BU / GY	(3) 4054	(3) Private Serial Data Powertrain CAN Bus [-] Serial Data	(3) I	(3) —
(4) 4	(4) 1	(4) BK / WH	(4) 6151	(4) Engine Control Module Ground	(4) I	(4) —

B203 Radiator Coolant Temperature Sensor (LZ0)

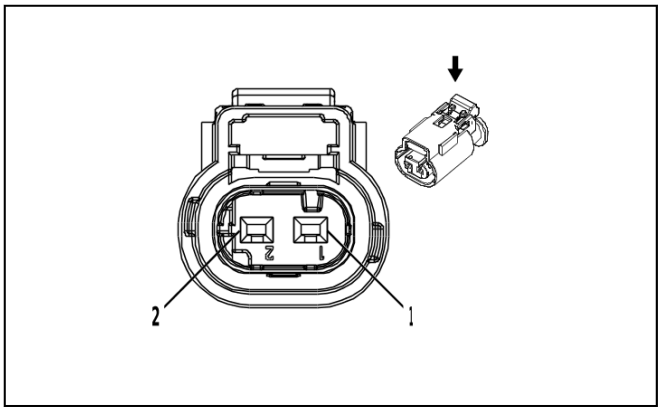

2717066

Connector Part Information
- Harness Type: Engine Wiring Harness
- OEM Connector: 10010337
- Service Connector: 13587326
- Description: 2-Way F 1.2 Multilock Series, Sealed(BK)

Terminal Part Information

Terminal Type ID	Terminated Lead	Diagnostic Test Probe	Terminal Removal Tool
I	Not required	J-35616-16 (L-GN)	No Tool Required

B203 Radiator Coolant Temperature Sensor (LZ0)

Pin	Size	Color	Circuit	Function	Terminal Type ID	Option
(1) 1	(1) 0.5	(1) YE / BK	(1) 3000	(1) Coolant Temperature Sensor 2 Signal	(1) I	(1) —
(2) 2	(2) 0.5	(2) BK / GN	(2) 580	(2) Engine Control Sensors Low Reference 2	(2) I	(2) —

B212 Reductant Tank Fluid Sensor (LZ0)

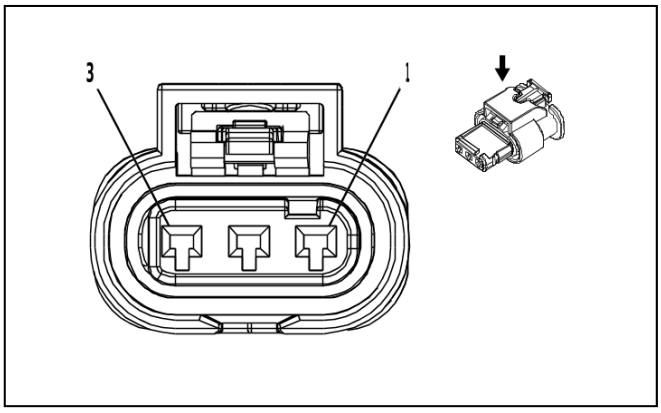

2750649

Connector Part Information
- Harness Type: Emission Reduction Fluid Tank Reservoir Wire Harness
- OEM Connector: 13722729
- Service Connector: Service by Harness - See Part Catalog
- Description: 3-Way F 1.2 MCON Series, Sealed(BK)

Terminal Part Information

Terminal Type ID	Terminated Lead	Diagnostic Test Probe	Terminal Removal Tool
I	Not required	No Tool Required	No Tool Required

B212 Reductant Tank Fluid Sensor (LZ0)

Pin	Size	Color	Circuit	Function	Terminal Type ID	Option
(1) 1	(1) —	(1) BK	(1) 7290	(1) Diesel Exhaust Fluid Sensor Voltage Reference 1	(1) I	(1) —
(2) 2	(2) —	(2) BN	(2) 7284	(2) Diesel Exhaust Fluid Liquid Quality Temperature Signal	(2) I	(2) —
(3) 3	(3) —	(3) BK	(3) 8434	(3) Diesel Exhaust Fluid Sensor Low Reference	(3) I	(3) —

B218L Side Obstacle Detection Control Module - Left ((UKI / UKW) - UKL)

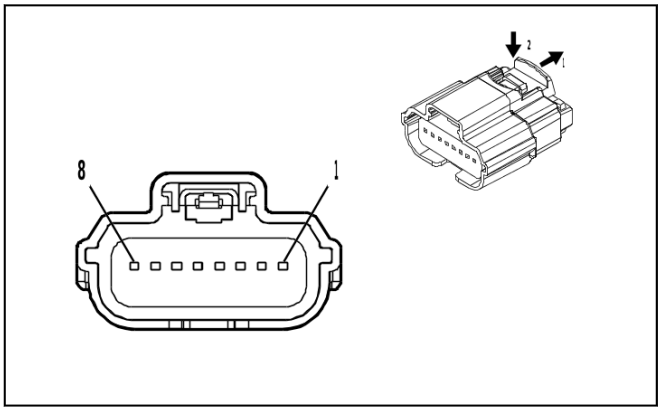

4708234

Connector Part Information

- Harness Type: Rear Object Alarm Sensor Wiring Harness
- OEM Connector: 31404-9110
- Service Connector: Service by Harness - See Part Catalog
- Description: 8-Way F 64 Series, Sealed(BK)

Terminal Part Information

Terminal Type ID	Terminated Lead	Diagnostic Test Probe	Terminal Removal Tool
I	Not required	J-35616-64B (L-BU)	No Tool Required

B218L Side Obstacle Detection Control Module - Left ((UKI / UKW) - UKL)

Pin	Size	Color	Circuit	Function	Terminal Type ID	Option
(1) 1	(1) 0.5	(1) WH	(1) 4087	(1) Private Serial Data Side Obstacle Detection CAN Bus [-] Serial Data	(1) I	(1) —
(2) 2	(2) 0.5	(2) BU / VT	(2) 4088	(2) Private Serial Data Side Obstacle Detection CAN Bus [+] Serial Data	(2) I	(2) —
(3) 3	(3) 0.5	(3) BK	(3) 1450	(3) Ground	(3) I	(3) —
(4) 4	(4) 0.35	(4) WH	(4) 4100	(4) AUTOSAR CAN Bus [-] 4 Serial Data	(4) I	(4) —
(5) 5	(5) 0.5	(5) WH	(5) 4100	(5) AUTOSAR CAN Bus [-] 4 Serial Data	(5) I	(5) —
(6) 6	(6) 0.5	(6) BU / VT	(6) 4101	(6) AUTOSAR CAN Bus [+] 4 Serial Data	(6) I	(6) —

Pin	Size	Color	Circuit	Function	Terminal Type ID	Option
(7) 7	(7) 0.35	(7) BU / VT	(7) 4101	(7) AUTOSAR CAN Bus [+] 4 Serial Data	(7) I	(7) —
(8) 8	(8) 0.5	(8) RD / BN	(8) 4940	(8) Battery Positive Voltage	(8) I	(8) —

B218R Side Obstacle Detection Control Module - Right ((UKI / UKW) - UKL)

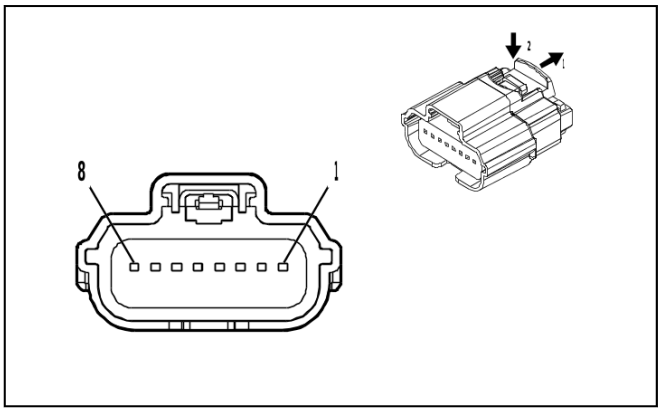

4708234

Connector Part Information

- Harness Type: Rear Object Alarm Sensor Wiring Harness
- OEM Connector: 31404-9532
- Service Connector: Service by Harness - See Part Catalog
- Description: 8-Way F 64 Series, Sealed(BK)

Terminal Part Information

Terminal Type ID	Terminated Lead	Diagnostic Test Probe	Terminal Removal Tool
I	Not required	J-35616-64B (L-BU)	No Tool Required

B218R Side Obstacle Detection Control Module - Right ((UKI / UKW) - UKL)

Pin	Size	Color	Circuit	Function	Terminal Type ID	Option
(1) 1	(1) 0.5	(1) WH	(1) 4087	(1) Private Serial Data Side Obstacle Detection CAN Bus [-] Serial Data	(1) I	(1) —
(2) 2	(2) 0.5	(2) BU / VT	(2) 4088	(2) Private Serial Data Side Obstacle Detection CAN Bus [+] Serial Data	(2) I	(2) —
(3) 3	(3) 0.5	(3) BK	(3) 1450	(3) Ground	(3) I	(3) —
4	—	—	—	Not Occupied	—	—
(5) 5	(5) 0.5	(5) WH	(5) 4100	(5) AUTOSAR CAN Bus [-] 4 Serial Data	(5) I	(5) —
(6) 6	(6) 0.5	(6) BU / VT	(6) 4101	(6) AUTOSAR CAN Bus [+] 4 Serial Data	(6) I	(6) —
7	—	—	—	Not Occupied	—	—
(8) 8	(8) 0.5	(8) RD / BN	(8) 4940	(8) Battery Positive Voltage	(8) I	(8) —

B233B Forward Range Radar Sensor - Long Range

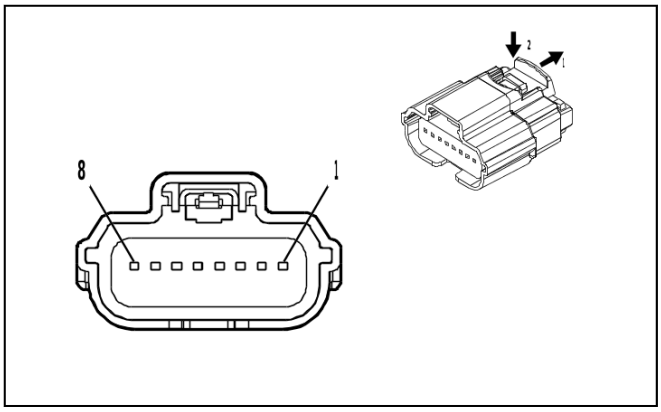

4708234

Connector Part Information

- Harness Type: Forward Range Radar Sensor Wiring Harness
- OEM Connector: 31404-9134
- Service Connector: Service by Harness - See Part Catalog
- Description: 8-Way F 64 Series, Sealed(BK)

Terminal Part Information

Terminal Type ID	Terminated Lead	Diagnostic Test Probe	Terminal Removal Tool
I	Not required	J-35616-64B (L-BU)	No Tool Required

B233B Forward Range Radar Sensor - Long Range

Pin	Size	Color	Circuit	Function	Terminal Type ID	Option
1 - 2	—	—	—	Not Occupied	—	—
(3) 3	(3) 0.35	(3) BU / GY	(3) 4105	(3) AUTOSAR CAN Bus [+] 8 Serial Data	(3) I	(3) —
(4) 4	(4) 0.35	(4) WH / GY	(4) 4104	(4) AUTOSAR CAN Bus [-] 8 Serial Data	(4) I	(4) —
(5) 5	(5) 0.5	(5) RD / GN	(5) 3140	(5) Battery Positive Voltage	(5) I	(5) —
6 - 7	—	—	—	Not Occupied	—	—
(8) 8	(8) 0.5	(8) BK / WH	(8) 251	(8) Signal Ground	(8) I	(8) —

B233LF Short Range Radar Sensor - Left Front (UKL)

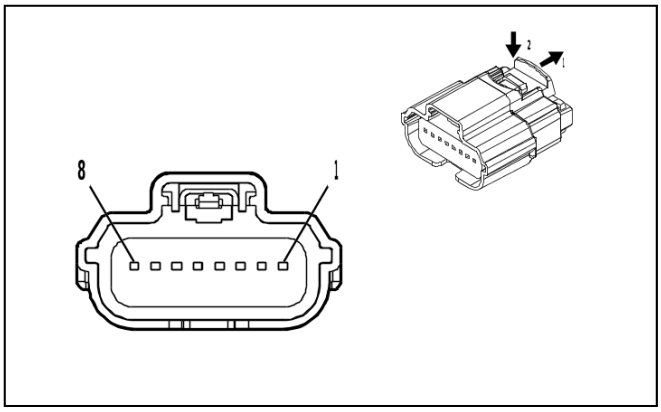

4708234

Connector Part Information

- Harness Type: Front Object Alarm Sensor Wiring Harness
- OEM Connector: 31404-9111
- Service Connector: Service by Harness - See Part Catalog
- Description: 8-Way F 64 Series, Sealed(BK)

Terminal Part Information

Terminal Type ID	Terminated Lead	Diagnostic Test Probe	Terminal Removal Tool
I	Not required	J-35616-64B (L-BU)	No Tool Required

B233LF Short Range Radar Sensor - Left Front (UKL)

Pin	Size	Color	Circuit	Function	Terminal Type ID	Option
(1) 1	(1) 0.5	(1) BK / WH	(1) 251	(1) Signal Ground	(1) I	(1) —
(2) 2	(2) 0.5	(2) BK / WH	(2) 251	(2) Signal Ground	(2) I	(2) —
3	—	—	—	Not Occupied	—	—
(4) 4	(4) 0.5	(4) RD / GN	(4) 3140	(4) Battery Positive Voltage	(4) I	(4) —
(5) 5	(5) 0.35	(5) WH / GY	(5) 4104	(5) AUTOSAR CAN Bus [-] 8 Serial Data	(5) I	(5) —
(6) 6	(6) 0.35	(6) BU / GY	(6) 4105	(6) AUTOSAR CAN Bus [+] 8 Serial Data	(6) I	(6) —
(7) 7	(7) 0.35	(7) WH / GY	(7) 4104	(7) AUTOSAR CAN Bus [-] 8 Serial Data	(7) I	(7) —
(8) 8	(8) 0.35	(8) BU / GY	(8) 4105	(8) AUTOSAR CAN Bus [+] 8 Serial Data	(8) I	(8) —

B233LR Short Range Radar Rear Sensor - Left (UKI / UVZ)

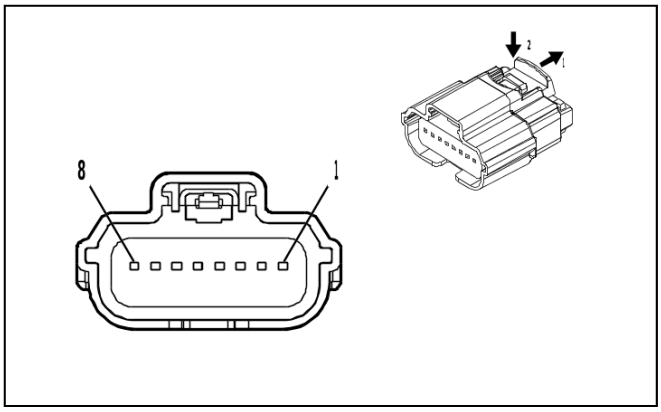

4708234

Connector Part Information

- Harness Type: Rear Object Alarm Sensor Wiring Harness
- OEM Connector: 31404-9552
- Service Connector: Service by Harness - See Part Catalog
- Description: 8-Way F 64 Series, Sealed(BK)

Terminal Part Information

Terminal Type ID	Terminated Lead	Diagnostic Test Probe	Terminal Removal Tool
I	Not required	J-35616-64B (L-BU)	No Tool Required

B233LR Short Range Radar Rear Sensor - Left (UKI / UVZ)

Pin	Size	Color	Circuit	Function	Terminal Type ID	Option
(1) 1	(1) 0.5	(1) BK	(1) 1450	(1) Ground	(1) I	(1) —
2 - 3	—	—	—	Not Occupied	—	—
(4) 4	(4) 0.75	(4) RD / BN	(4) 4940	(4) Battery Positive Voltage	(4) I	(4) —
(5) 5	(5) 0.5	(5) WH / GY	(5) 4104	(5) AUTOSAR CAN Bus [-] 8 Serial Data	(5) I	(5) —
(6) 6	(6) 0.5	(6) BU / GY	(6) 4105	(6) AUTOSAR CAN Bus [+] 8 Serial Data	(6) I	(6) —
(7) 7	(7) 0.5	(7) WH / GY	(7) 4104	(7) AUTOSAR CAN Bus [-] 8 Serial Data	(7) I	(7) —
(8) 8	(8) 0.5	(8) BU / GY	(8) 4105	(8) AUTOSAR CAN Bus [+] 8 Serial Data	(8) I	(8) —

B233RF Short Range Radar Sensor - Right Front (UKL)

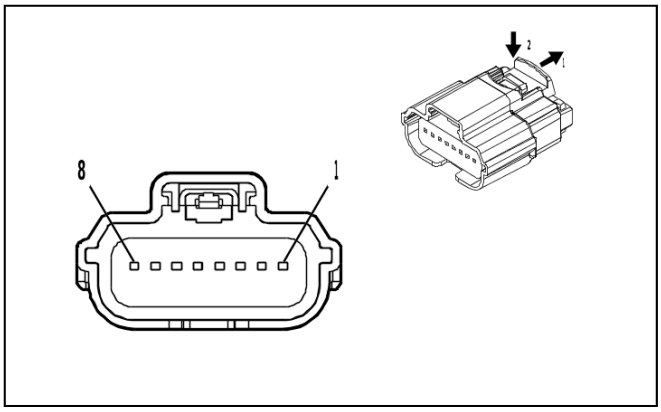

4708234

Connector Part Information

- Harness Type: Front Object Alarm Sensor Wiring Harness
- OEM Connector: 31404-9171
- Service Connector: Service by Harness - See Part Catalog
- Description: 8-Way F 64 Series, Sealed(BK)

Terminal Part Information

Terminal Type ID	Terminated Lead	Diagnostic Test Probe	Terminal Removal Tool
I	Not required	J-35616-64B (L-BU)	No Tool Required

B233RF Short Range Radar Sensor - Right Front (UKL)

Pin	Size	Color	Circuit	Function	Terminal Type ID	Option
(1) 1	(1) 0.5	(1) BK / WH	(1) 251	(1) Signal Ground	(1) I	(1) —
2	—	—	—	Not Occupied	—	—
(3) 3	(3) 0.5	(3) BK / WH	(3) 251	(3) Signal Ground	(3) I	(3) —
(4) 4	(4) 0.5	(4) RD / GN	(4) 3140	(4) Battery Positive Voltage	(4) I	(4) —
(5) 5	(5) 0.35	(5) WH / GY	(5) 4104	(5) AUTOSAR CAN Bus [-] 8 Serial Data	(5) I	(5) —
(6) 6	(6) 0.35	(6) BU / GY	(6) 4105	(6) AUTOSAR CAN Bus [+] 8 Serial Data	(6) I	(6) —
(7) 7	(7) 0.35	(7) WH / GY	(7) 4104	(7) AUTOSAR CAN Bus [-] 8 Serial Data	(7) I	(7) —
(8) 8	(8) 0.35	(8) BU / GY	(8) 4105	(8) AUTOSAR CAN Bus [+] 8 Serial Data	(8) I	(8) —

B233RR Short Range Radar Rear Sensor - Right (UKI / UVZ)

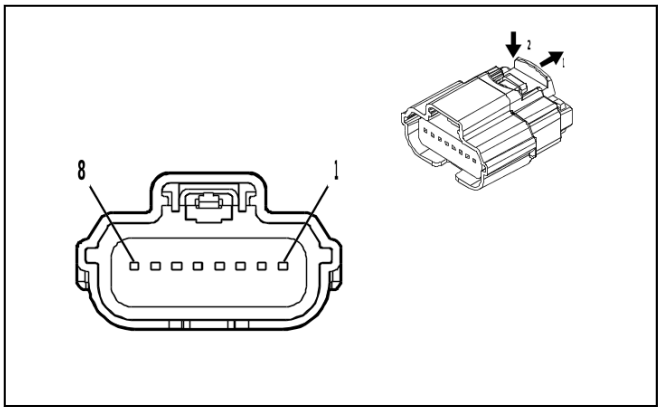

4708234

Connector Part Information

- Harness Type: Rear Object Alarm Sensor Wiring Harness
- OEM Connector: 31404-9110
- Service Connector: Service by Harness - See Part Catalog
- Description: 8-Way F 64 Series, Sealed(BK)

Terminal Part Information

Terminal Type ID	Terminated Lead	Diagnostic Test Probe	Terminal Removal Tool
I	Not required	J-35616-64B (L-BU)	No Tool Required

B233RR Short Range Radar Rear Sensor - Right (UKI / UVZ)

Pin	Size	Color	Circuit	Function	Terminal Type ID	Option
(1) 1	(1) 0.5	(1) BK	(1) 1450	(1) Ground	(1) I	(1) —
(2) 2	(2) 0.5	(2) BK	(2) 1450	(2) Ground	(2) I	(2) —
(3) 3	(3) 0.5	(3) BK	(3) 1450	(3) Ground	(3) I	(3) —
(4) 4	(4) 0.75	(4) RD / BN	(4) 4940	(4) Battery Positive Voltage	(4) I	(4) —
(5) 5	(5) 0.5	(5) WH / GY	(5) 4104	(5) AUTOSAR CAN Bus [-] 8 Serial Data	(5) I	(5) —
(6) 6	(6) 0.5	(6) BU / GY	(6) 4105	(6) AUTOSAR CAN Bus [+] 8 Serial Data	(6) I	(6) —
(7) 7	(7) 0.5	(7) WH / GY	(7) 4104	(7) AUTOSAR CAN Bus [-] 8 Serial Data	(7) I	(7) —
(8) 8	(8) 0.5	(8) BU / GY	(8) 4105	(8) AUTOSAR CAN Bus [+] 8 Serial Data	(8) I	(8) —

B233SL Short Range Radar Rear Side Sensor - Left (UKL)

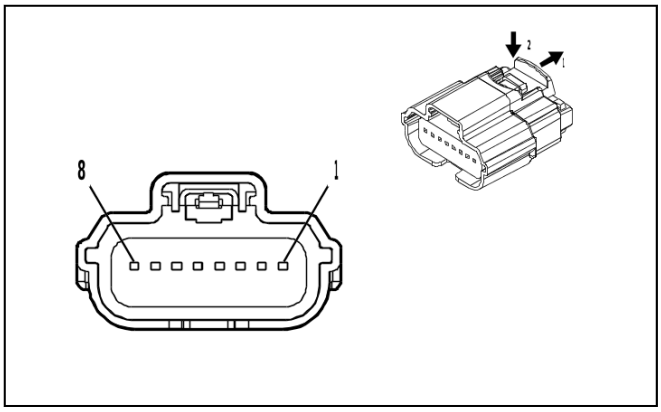

4708234

Connector Part Information

- Harness Type: Rear Object Alarm Sensor Wiring Harness
- OEM Connector: 31404-9552
- Service Connector: Service by Harness - See Part Catalog
- Description: 8-Way F 64 Series, Sealed(BK)

Terminal Part Information

Terminal Type ID	Terminated Lead	Diagnostic Test Probe	Terminal Removal Tool
I	Not required	J-35616-64B (L-BU)	No Tool Required

B233SL Short Range Radar Rear Side Sensor - Left (UKL)

Pin	Size	Color	Circuit	Function	Terminal Type ID	Option
(1) 1	(1) 0.5	(1) BK	(1) 1450	(1) Ground	(1) I	(1) —
2 - 3	—	—	—	Not Occupied	—	—
(4) 4	(4) 0.75	(4) RD / BN	(4) 4940	(4) Battery Positive Voltage	(4) I	(4) —
(5) 5	(5) 0.5	(5) WH / GY	(5) 4104	(5) AUTOSAR CAN Bus [-] 8 Serial Data	(5) I	(5) —
(6) 6	(6) 0.5	(6) BU / GY	(6) 4105	(6) AUTOSAR CAN Bus [+] 8 Serial Data	(6) I	(6) —
(7) 7	(7) 0.5	(7) WH / GY	(7) 4104	(7) AUTOSAR CAN Bus [-] 8 Serial Data	(7) I	(7) —
(8) 8	(8) 0.5	(8) BU / GY	(8) 4105	(8) AUTOSAR CAN Bus [+] 8 Serial Data	(8) I	(8) —

B233SR Short Range Radar Rear Side Sensor - Right (UKL)

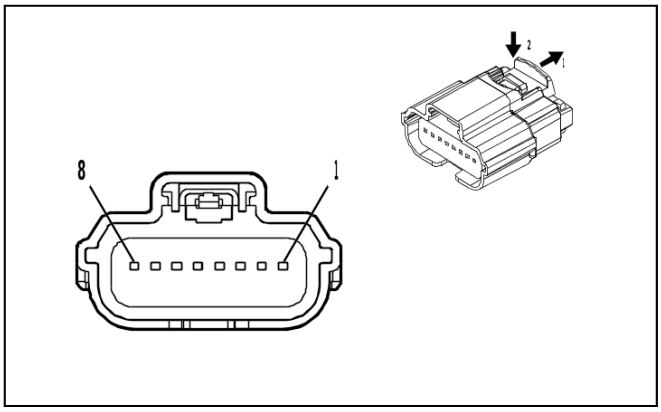

4708234

Connector Part Information

- Harness Type: Rear Object Alarm Sensor Wiring Harness
- OEM Connector: 31404-9110
- Service Connector: Service by Harness - See Part Catalog
- Description: 8-Way F 64 Series, Sealed(BK)

Terminal Part Information

Terminal Type ID	Terminated Lead	Diagnostic Test Probe	Terminal Removal Tool
I	Not required	J-35616-64B (L-BU)	No Tool Required

B233SR Short Range Radar Rear Side Sensor - Right (UKL)

Pin	Size	Color	Circuit	Function	Terminal Type ID	Option
(1) 1	(1) 0.5	(1) BK	(1) 1450	(1) Ground	(1) I	(1) —
(2) 2	(2) 0.5	(2) BK	(2) 1450	(2) Ground	(2) I	(2) —
(3) 3	(3) 0.5	(3) BK	(3) 1450	(3) Ground	(3) I	(3) —
(4) 4	(4) 0.75	(4) RD / BN	(4) 4940	(4) Battery Positive Voltage	(4) I	(4) —
(5) 5	(5) 0.5	(5) WH / GY	(5) 4104	(5) AUTOSAR CAN Bus [-] 8 Serial Data	(5) I	(5) —
(6) 6	(6) 0.5	(6) BU / GY	(6) 4105	(6) AUTOSAR CAN Bus [+] 8 Serial Data	(6) I	(6) —
(7) 7	(7) 0.5	(7) WH / GY	(7) 4104	(7) AUTOSAR CAN Bus [-] 8 Serial Data	(7) I	(7) —
(8) 8	(8) 0.5	(8) BU / GY	(8) 4105	(8) AUTOSAR CAN Bus [+] 8 Serial Data	(8) I	(8) —

B284 Vehicle Dynamics Sensor (UKL)

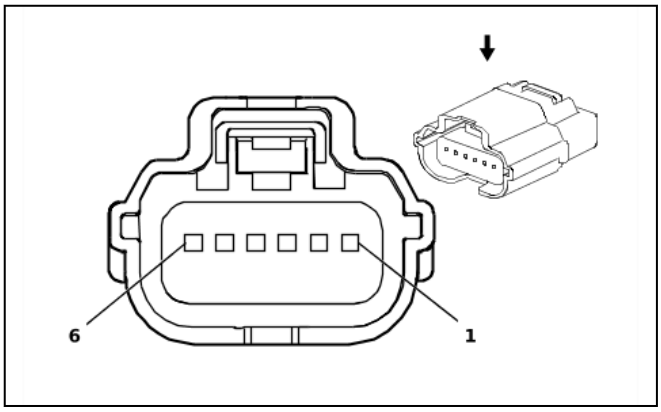

1974974

Connector Part Information

- Harness Type: Body Wiring Harness
- OEM Connector: 13541403
- Service Connector: 84773558
- Description: 6-Way F 0.64 Series, Sealed(BK)

Terminal Part Information

Terminal Type ID	Terminated Lead	Diagnostic Test Probe	Terminal Removal Tool
I	Not required	J-35616-64B (L-BU)	No Tool Required
II	Service by Cable	J-35616-64B (L-BU)	J-38125-215A

B284 Vehicle Dynamics Sensor (UKL)

Pin	Size	Color	Circuit	Function	Terminal Type ID	Option
(1) 1	(1) 0.5	(1) VT / GY	(1) 8978	(1) Inertial Sensor Supply Voltage	(1) I	(1) —
(2) 2	(2) 0.35	(2) BU	(2) 8977	(2) Private Serial Data Active Safety CAN Bus [+] Serial Data	(2) II	(2) —
(3) 3	(3) 0.35	(3) WH	(3) 8976	(3) Private Serial Data Active Safety CAN Bus [-] Serial Data	(3) II	(3) —
4 - 5	—	—	—	Not Occupied	—	—
(6) 6	(6) 0.35	(6) BK / WH	(6) 1351	(6) Signal Ground	(6) I	(6) —

B292 Driver Monitoring Camera (UKL)

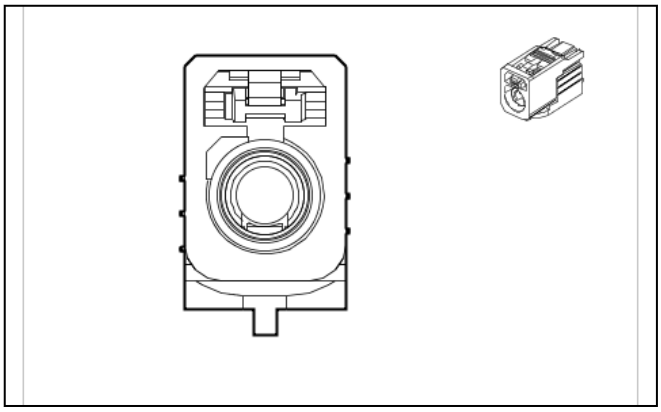

5633912

Connector Part Information
- Harness Type: Instrument Panel Wiring Harness COAX
- OEM Connector: 33351016
- Service Connector: Service by Cable Assembly — See Part Catalog
- Description: 1-Way F Coax Type(GN)

Terminal Part Information

Terminal Type ID	Terminated Lead	Diagnostic Test Probe	Terminal Removal Tool
I	Not required	No Tool Required	No Tool Required

B292 Driver Monitoring Camera (UKL)

Pin	Size	Color	Circuit	Function	Terminal Type ID	Option
—	—	Coax Cable	—	Driver Monitoring System Camera Coaxial Signal	I	—

B306AB Front Parking Assist Alarm Outer Sensor - Left (UKZ)

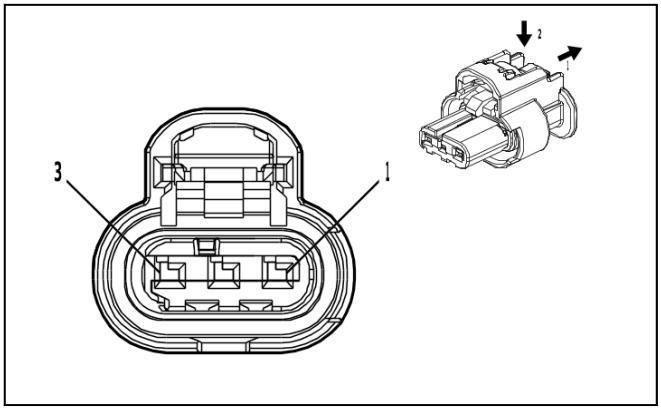

4994602

Connector Part Information
- Harness Type: Front Object Alarm Sensor Wiring Harness
- OEM Connector: 1-2296695-3
- Service Connector: Service by Harness - See Part Catalog
- Description: 3-Way F 1.2 MCON-CB Series, Sealed(BK)

Terminal Part Information

Terminal Type ID	Terminated Lead	Diagnostic Test Probe	Terminal Removal Tool
I	Not required	J-35616-16 (L-GN)	No Tool Required

B306AB Front Parking Assist Alarm Outer Sensor - Left (UKZ)

Pin	Size	Color	Circuit	Function	Terminal Type ID	Option
(1) 1	(1) 0.5	(1) BN	(1) 6581	(1) Front Parking Assist Display Control	(1) I	(1) —
(2) 2	(2) 0.5	(2) VT / WH	(2) 5215	(2) Left Front Outer Parking Assist Sensor	(2) I	(2) —
(3) 3	(3) 0.5	(3) BK / BU	(3) 5214	(3) Front Parking Assist Sensor Low Reference	(3) I	(3) —

B306BB Front Parking Assist Alarm Sensor - Left Middle (UKZ)

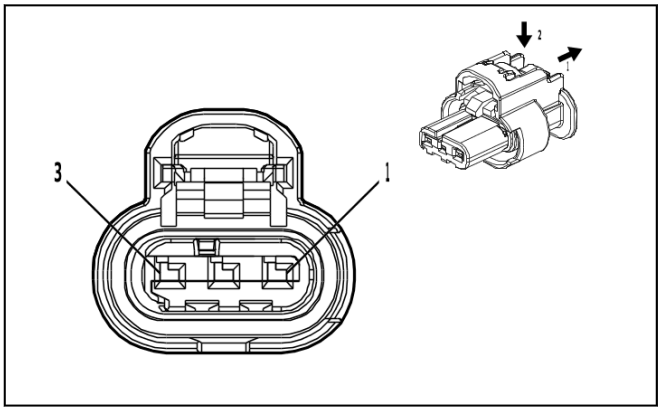

4994602

Connector Part Information

- Harness Type: Front Object Alarm Sensor Wiring Harness
- OEM Connector: 1-2296695-3
- Service Connector: Service by Harness - See Part Catalog
- Description: 3-Way F 1.2 MCON-CB Series, Sealed(BK)

Terminal Part Information

Terminal Type ID	Terminated Lead	Diagnostic Test Probe	Terminal Removal Tool
I	Not required	J-35616-16 (L-GN)	No Tool Required

B306BB Front Parking Assist Alarm Sensor - Left Middle (UKZ)

Pin	Size	Color	Circuit	Function	Terminal Type ID	Option
(1) 1	(1) 0.5	(1) BN	(1) 6581	(1) Front Parking Assist Display Control	(1) I	(1) —
(2) 2	(2) 0.5	(2) YE / GY	(2) 5216	(2) Left Front Middle Parking Assist Sensor	(2) I	(2) —
(3) 3	(3) 0.5	(3) BK / BU	(3) 5214	(3) Front Parking Assist Sensor Low Reference	(3) I	(3) —

B306CB Front Parking Assist Alarm Sensor - Right Middle (UKZ)

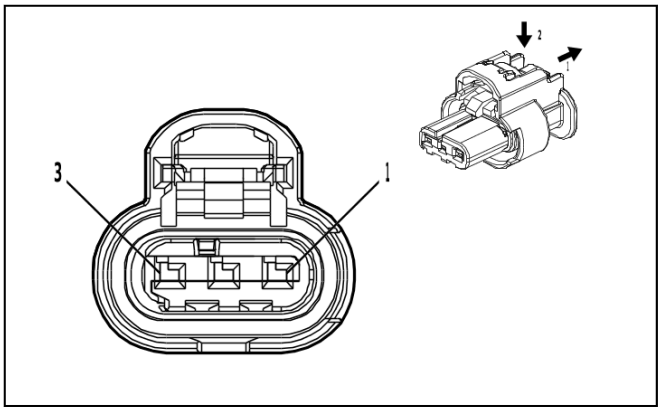

4994602

Connector Part Information

- Harness Type: Front Object Alarm Sensor Wiring Harness
- OEM Connector: 1-2296695-3
- Service Connector: Service by Harness - See Part Catalog
- Description: 3-Way F 1.2 MCON-CB Series, Sealed(BK)

Terminal Part Information

Terminal Type ID	Terminated Lead	Diagnostic Test Probe	Terminal Removal Tool
I	Not required	J-35616-16 (L-GN)	No Tool Required

B306CB Front Parking Assist Alarm Sensor - Right Middle (UKZ)

Pin	Size	Color	Circuit	Function	Terminal Type ID	Option
(1) 1	(1) 0.5	(1) BN	(1) 6581	(1) Front Parking Assist Display Control	(1) I	(1) —
(2) 2	(2) 0.5	(2) VT / GY	(2) 5218	(2) Right Front Middle Parking Assist Sensor	(2) I	(2) UKL
(3) 3	(3) 0.5	(3) BK / BU	(3) 5214	(3) Front Parking Assist Sensor Low Reference	(3) I	(3) —

B306DB Front Parking Assist Alarm Outer Sensor - Right (UKZ)

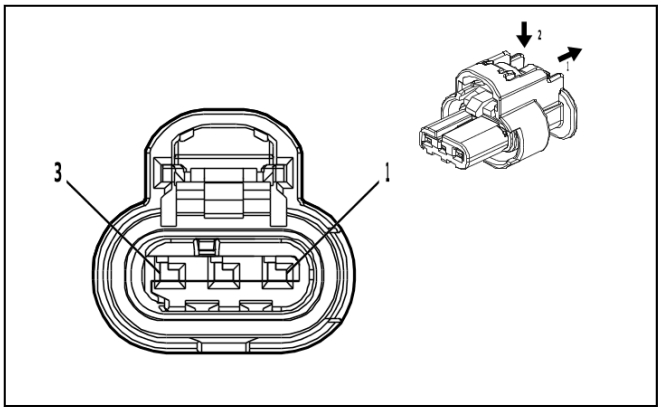

4994602

Connector Part Information

- Harness Type: Front Object Alarm Sensor Wiring Harness
- OEM Connector: 1-2296695-3
- Service Connector: Service by Harness - See Part Catalog
- Description: 3-Way F 1.2 MCON-CB Series, Sealed(BK)

Terminal Part Information

Terminal Type ID	Terminated Lead	Diagnostic Test Probe	Terminal Removal Tool
I	Not required	J-35616-16 (L-GN)	No Tool Required
I	Not required	J-35616-16 (L-GN)	No Tool Required

B306DB Front Parking Assist Alarm Outer Sensor - Right (UKZ)

Pin	Size	Color	Circuit	Function	Terminal Type ID	Option
(1) 1	(1) 0.5	(1) BN	(1) 6581	(1) Front Parking Assist Display Control	(1) I	(1) —
(2) 2	(2) 0.5	(2) WH / GY	(2) 5217	(2) Right Front Outer Parking Assist Sensor	(2) I	(2) —
(3) 3	(3) 0.5	(3) BK / BU	(3) 5214	(3) Front Parking Assist Sensor Low Reference	(3) I	(3) —

B306EB Rear Parking Assist Alarm Outer Sensor - Left (UD7)

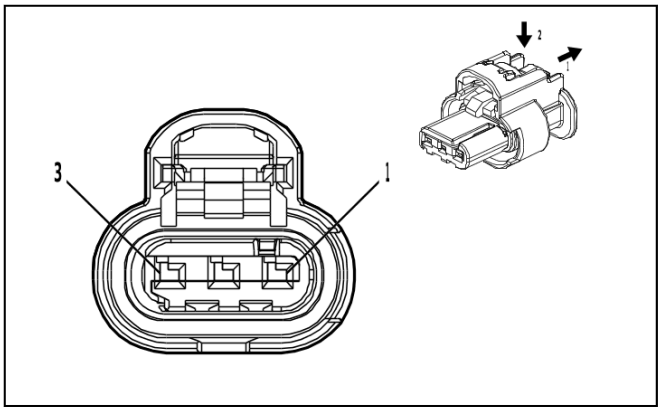

4581126

Connector Part Information

- Harness Type: Rear Object Alarm Sensor Wiring Harness
- OEM Connector: 1-2296695-1
- Service Connector: Service by Harness - See Part Catalog
- Description: 3-Way F 1.2 MCON-CB Series, Sealed(BK)

Terminal Part Information

Terminal Type ID	Terminated Lead	Diagnostic Test Probe	Terminal Removal Tool
I	Not required	J-35616-16 (L-GN)	No Tool Required

B306EB Rear Parking Assist Alarm Outer Sensor - Left (UD7)

Pin	Size	Color	Circuit	Function	Terminal Type ID	Option
(1) 1	(1) 0.5	(1) BN / WH	(1) 2374	(1) Object Sensor Voltage Reference	(1) I	(1) —
(2) 2	(2) 0.5	(2) YE	(2) 2375	(2) Left Rear Outer Parking Assist Sensor Signal	(2) I	(2) —
(3) 3	(3) 0.5	(3) BK / GY	(3) 2379	(3) Object Sensor Low Reference	(3) I	(3) —

B306EB Rear Parking Assist Alarm Outer Sensor - Left (UKZ)

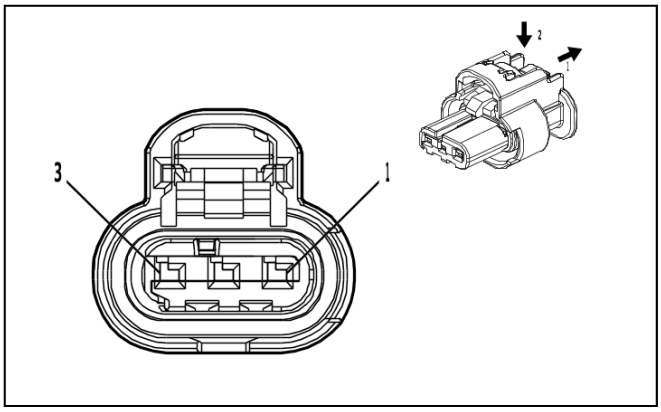

4994602

Connector Part Information

- Harness Type: Rear Object Alarm Sensor Wiring Harness
- OEM Connector: 1-2296695-3
- Service Connector: Service by Harness - See Part Catalog
- Description: 3-Way F 1.2 MCON-CB Series, Sealed(BK)

Terminal Part Information

Terminal Type ID	Terminated Lead	Diagnostic Test Probe	Terminal Removal Tool
I	Not required	J-35616-16 (L-GN)	No Tool Required

B306EB Rear Parking Assist Alarm Outer Sensor - Left (UKZ)

Pin	Size	Color	Circuit	Function	Terminal Type ID	Option
(1) 1	(1) 0.5	(1) BN / WH	(1) 2374	(1) Object Sensor Voltage Reference	(1) I	(1) —
(2) 2	(2) 0.5	(2) YE	(2) 2375	(2) Left Rear Outer Parking Assist Sensor Signal	(2) I	(2) —
(3) 3	(3) 0.5	(3) BK / GY	(3) 2379	(3) Object Sensor Low Reference	(3) I	(3) —

B306FB Rear Parking Assist Alarm Sensor - Left Middle (UD7)

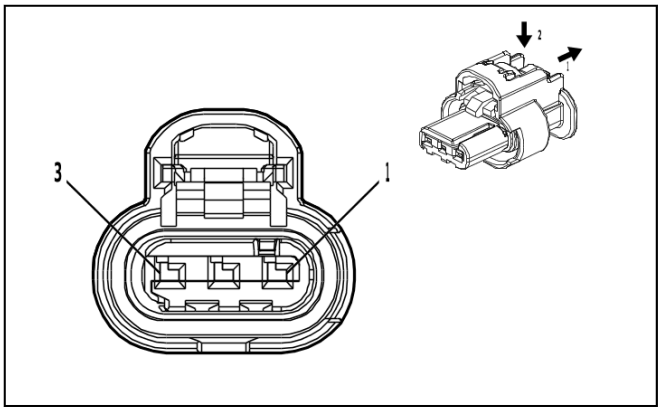

4581126

Connector Part Information

- Harness Type: Rear Object Alarm Sensor Wiring Harness
- OEM Connector: 1-2296695-1
- Service Connector: Service by Harness - See Part Catalog
- Description: 3-Way F 1.2 MCON-CB Series, Sealed(BK)

Terminal Part Information

Terminal Type ID	Terminated Lead	Diagnostic Test Probe	Terminal Removal Tool
I	Not required	J-35616-16 (L-GN)	No Tool Required

B306FB Rear Parking Assist Alarm Sensor - Left Middle (UD7)

Pin	Size	Color	Circuit	Function	Terminal Type ID	Option
(1) 1	(1) 0.5	(1) BN / WH	(1) 2374	(1) Object Sensor Voltage Reference	(1) I	(1) —
(2) 2	(2) 0.5	(2) YE / BU	(2) 2376	(2) Left Rear Middle Parking Assist Sensor Signal	(2) I	(2) —
(3) 3	(3) 0.5	(3) BK / GY	(3) 2379	(3) Object Sensor Low Reference	(3) I	(3) —

B306FB Rear Parking Assist Alarm Sensor - Left Middle (UKZ)

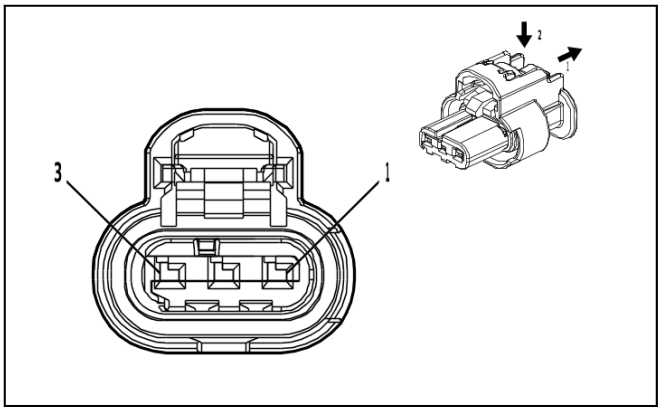

4994602

Connector Part Information

- Harness Type: Rear Object Alarm Sensor Wiring Harness
- OEM Connector: 1-2296695-3
- Service Connector: Service by Harness - See Part Catalog
- Description: 3-Way F 1.2 MCON-CB Series, Sealed(BK)

Terminal Part Information

Terminal Type ID	Terminated Lead	Diagnostic Test Probe	Terminal Removal Tool
I	Not required	J-35616-16 (L-GN)	No Tool Required

B306FB Rear Parking Assist Alarm Sensor - Left Middle (UKZ)

Pin	Size	Color	Circuit	Function	Terminal Type ID	Option
(1) 1	(1) 0.5	(1) BN / WH	(1) 2374	(1) Object Sensor Voltage Reference	(1) I	(1) —
(2) 2	(2) 0.5	(2) YE / BU	(2) 2376	(2) Left Rear Middle Parking Assist Sensor Signal	(2) I	(2) —
(3) 3	(3) 0.5	(3) BK / GY	(3) 2379	(3) Object Sensor Low Reference	(3) I	(3) —

B306GB Rear Parking Assist Alarm Sensor - Right Middle (UD7)

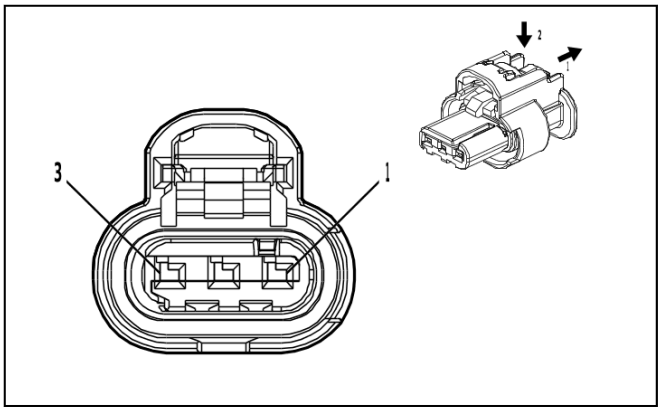

4581126

Connector Part Information

- Harness Type: Rear Object Alarm Sensor Wiring Harness
- OEM Connector: 1-2296695-1
- Service Connector: Service by Harness - See Part Catalog
- Description: 3-Way F 1.2 MCON-CB Series, Sealed(BK)

Terminal Part Information

Terminal Type ID	Terminated Lead	Diagnostic Test Probe	Terminal Removal Tool
I	Not required	J-35616-16 (L-GN)	No Tool Required

B306GB Rear Parking Assist Alarm Sensor - Right Middle (UD7)

Pin	Size	Color	Circuit	Function	Terminal Type ID	Option
(1) 1	(1) 0.5	(1) BN / WH	(1) 2374	(1) Object Sensor Voltage Reference	(1) I	(1) —
(2) 2	(2) 0.5	(2) YE / WH	(2) 2377	(2) Right Rear Middle Parking Assist Sensor Signal	(2) I	(2) —
(3) 3	(3) 0.5	(3) BK / GY	(3) 2379	(3) Object Sensor Low Reference	(3) I	(3) —

B306GB Rear Parking Assist Alarm Sensor - Right Middle (UKZ)

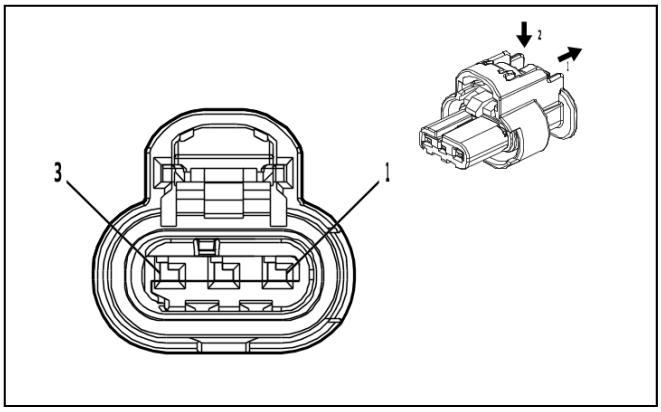

4994602

Connector Part Information

- Harness Type: Rear Object Alarm Sensor Wiring Harness
- OEM Connector: 1-2296695-3
- Service Connector: Service by Harness - See Part Catalog
- Description: 3-Way F 1.2 MCON-CB Series, Sealed(BK)

Terminal Part Information

Terminal Type ID	Terminated Lead	Diagnostic Test Probe	Terminal Removal Tool
I	Not required	J-35616-16 (L-GN)	No Tool Required

B306GB Rear Parking Assist Alarm Sensor - Right Middle (UKZ)

Pin	Size	Color	Circuit	Function	Terminal Type ID	Option
(1) 1	(1) 0.5	(1) BN / WH	(1) 2374	(1) Object Sensor Voltage Reference	(1) I	(1) —
(2) 2	(2) 0.5	(2) YE / WH	(2) 2377	(2) Right Rear Middle Parking Assist Sensor Signal	(2) I	(2) —
(3) 3	(3) 0.5	(3) BK / GY	(3) 2379	(3) Object Sensor Low Reference	(3) I	(3) —

B306HB Rear Parking Assist Alarm Outer Sensor - Right (UD7)

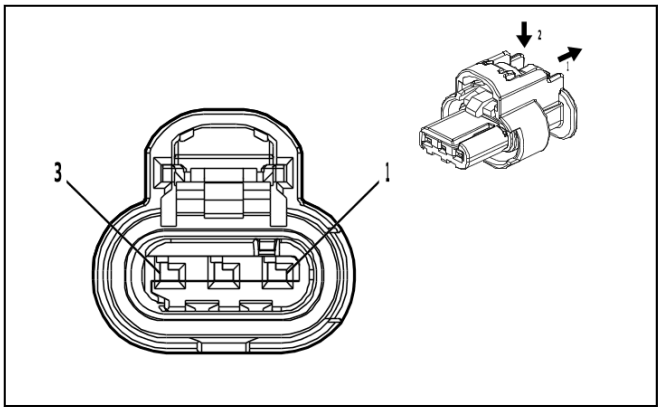

4581126

Connector Part Information

- Harness Type: Rear Object Alarm Sensor Wiring Harness
- OEM Connector: 1-2296695-1
- Service Connector: Service by Harness - See Part Catalog
- Description: 3-Way F 1.2 MCON-CB Series, Sealed(BK)

Terminal Part Information

Terminal Type ID	Terminated Lead	Diagnostic Test Probe	Terminal Removal Tool
I	Not required	J-35616-16 (L-GN)	No Tool Required

B306HB Rear Parking Assist Alarm Outer Sensor - Right (UD7)

Pin	Size	Color	Circuit	Function	Terminal Type ID	Option
(1) 1	(1) 0.5	(1) BN / WH	(1) 2374	(1) Object Sensor Voltage Reference	(1) I	(1) —
(2) 2	(2) 0.5	(2) YE / VT	(2) 2378	(2) Right Rear Outer Parking Assist Sensor Signal	(2) I	(2) —
(3) 3	(3) 0.5	(3) BK / GY	(3) 2379	(3) Object Sensor Low Reference	(3) I	(3) —

B306HB Rear Parking Assist Alarm Outer Sensor - Right (UKZ)

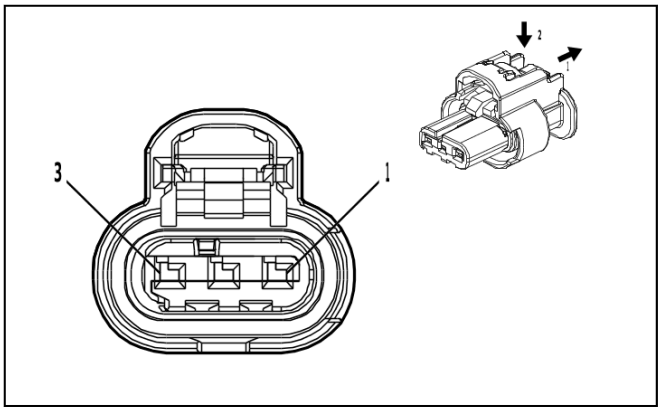

4994602

Connector Part Information

- Harness Type: Rear Object Alarm Sensor Wiring Harness
- OEM Connector: 1-2296695-3
- Service Connector: Service by Harness - See Part Catalog
- Description: 3-Way F 1.2 MCON-CB Series, Sealed(BK)

Terminal Part Information

Terminal Type ID	Terminated Lead	Diagnostic Test Probe	Terminal Removal Tool
I	Not required	J-35616-16 (L-GN)	No Tool Required

B306HB Rear Parking Assist Alarm Outer Sensor - Right (UKZ)

Pin	Size	Color	Circuit	Function	Terminal Type ID	Option
(1) 1	(1) 0.5	(1) BN / WH	(1) 2374	(1) Object Sensor Voltage Reference	(1) I	(1) —
(2) 2	(2) 0.5	(2) YE / VT	(2) 2378	(2) Right Rear Outer Parking Assist Sensor Signal	(2) I	(2) —
(3) 3	(3) 0.5	(3) BK / GY	(3) 2379	(3) Object Sensor Low Reference	(3) I	(3) —

B310 Fuel Pressure and Temperature Sensor (L84 / L87)

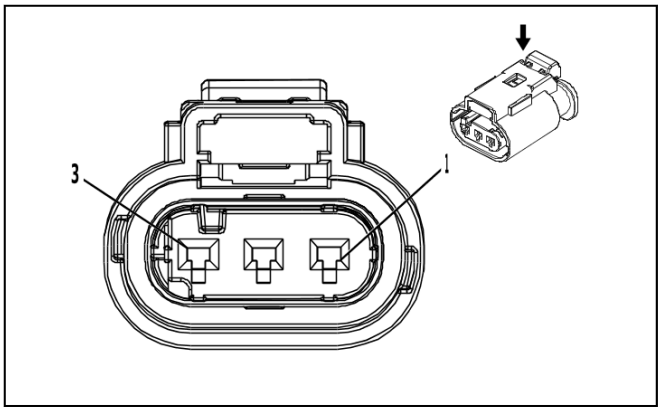

3240107

Connector Part Information

- Harness Type: Fuel Injector Wiring Harness - Left
- OEM Connector: 10010344
- Service Connector: Service by Harness - See Part Catalog
- Description: 3-Way F 1.2 Multilock Series, Sealed(BK)

Terminal Part Information

Terminal Type ID	Terminated Lead	Diagnostic Test Probe	Terminal Removal Tool
I	Not required	J-35616-16 (L-GN)	No Tool Required

B310 Fuel Pressure and Temperature Sensor (L84 / L87)

Pin	Size	Color	Circuit	Function	Terminal Type ID	Option
(1) 1	(1) 0.5	(1) BK / GN	(1) 548	(1) Engine Control Sensors Low Reference 1	(1) I	(1) —
(2) 2	(2) 0.5	(2) BU / WH	(2) 2918	(2) Fuel Rail Pressure Sensor Signal	(2) I	(2) —
(3) 3	(3) 0.5	(3) BN / RD	(3) 480	(3) Engine Control Vehicle Sensors 5 Volt Reference 1	(3) I	(3) —

B315A Transmission Range Control Valve 1 Position Switch

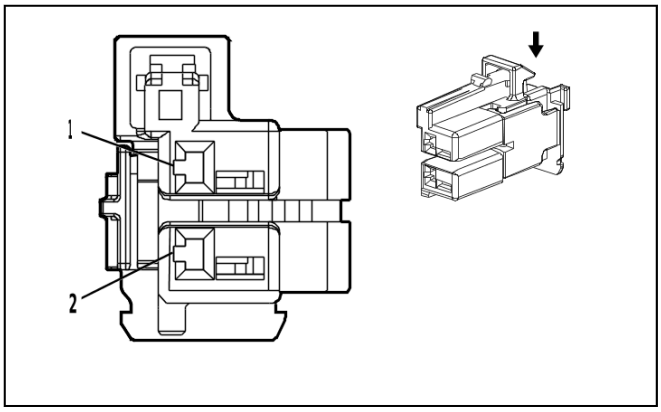

4672650

Connector Part Information
- Harness Type: Automatic Transmission Wiring Harness
- OEM Connector: 2289523-1
- Service Connector: Service by Harness - See Part Catalog
- Description: 2-Way F 1.2 MCON Series(BN)

Terminal Part Information

Terminal Type ID	Terminated Lead	Diagnostic Test Probe	Terminal Removal Tool
I	Not required	J-35616-12 (BU)	No Tool Required

B315A Transmission Range Control Valve 1 Position Switch

Pin	Size	Color	Circuit	Function	Terminal Type ID	Option
(1) 1	(1) 0.5	(1) BU	(1) 4171	(1) Transmission Input Shaft Speed Sensor Circuit 9V Reference	(1) I	(1) —
(2) 2	(2) 0.5	(2) BK / GY	(2) 3706	(2) Electronic Transmission Range Select Switch Analog Signal 1	(2) I	(2) —

B316 Transmission Park Valve Position Switch

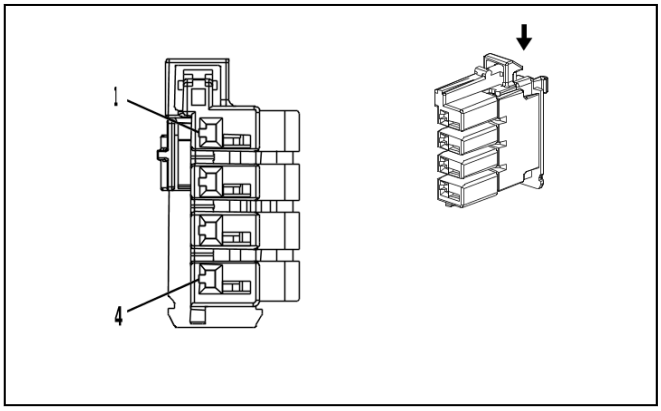

4364148

Connector Part Information
- Harness Type: Automatic Transmission Wiring Harness
- OEM Connector: 2289524-1
- Service Connector: Service by Harness - See Part Catalog
- Description: 4-Way F 1.2 MCON Series(BN)

Terminal Part Information

Terminal Type ID	Terminated Lead	Diagnostic Test Probe	Terminal Removal Tool
I	Not required	J-35616-12 (BU)	No Tool Required

B316 Transmission Park Valve Position Switch

Pin	Size	Color	Circuit	Function	Terminal Type ID	Option
1	—	—	—	Not Occupied	—	—
(2) 2	(2) 0.5	(2) GN	(2) 4170	(2) Transmission Output Shaft Speed Sensor Circuit 9V Reference	(2) I	(2) —
(3) 3	(3) 0.5	(3) YE	(3) 6317	(3) Electronic Transmission Range Select Out of Park Switch Signal	(3) I	(3) —
(4) 4	(4) 0.5	(4) YE / GY	(4) 6319	(4) Electronic Transmission Range Select Out of Park Switch 2 Signal	(4) I	(4) —

B321 Crankcase Pressure Sensor (LZ0)

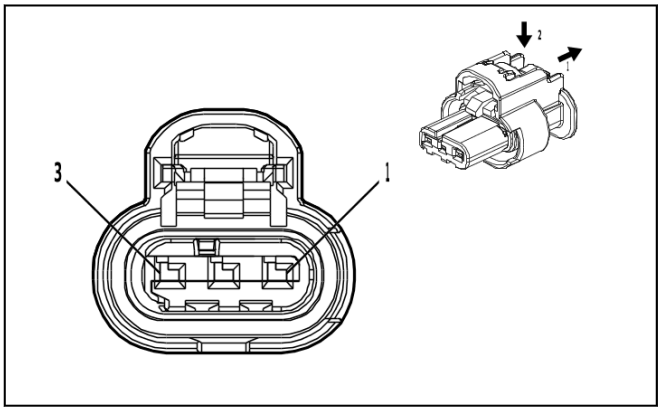

4994602

Connector Part Information

- Harness Type: Engine Wiring Harness
- OEM Connector: 1-2296695-3
- Service Connector: 19371199
- Description: 3-Way F 1.2 MCON-CB Series, Sealed(BK)

Terminal Part Information

Terminal Type ID	Terminated Lead	Diagnostic Test Probe	Terminal Removal Tool
I	Not required	J-35616-16 (L-GN)	No Tool Required

B321 Crankcase Pressure Sensor (LZ0)

Pin	Size	Color	Circuit	Function	Terminal Type ID	Option
(1) 1	(1) 0.5	(1) YE / GY	(1) 3926	(1) Crankcase Differential Pressure Sensor Signal	(1) I	(1) —
(2) 2	(2) 0.5	(2) BK / YE	(2) 548	(2) Engine Control Sensors Low Reference 1	(2) I	(2) —
(3) 3	(3) 0.5	(3) BU / RD	(3) 460	(3) Engine Control Sensors 5 Volt Reference 1	(3) I	(3) —

B342A UHF Low Energy Remote Control Access Sensor Transceiver 1 (BOR / BOY)

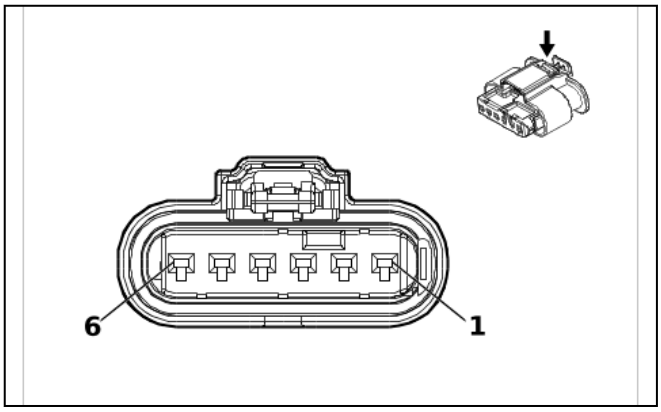

5835086

Connector Part Information

- Harness Type: Front Object Alarm Sensor Wiring Harness
- OEM Connector: 34900-6221
- Service Connector: Service by Harness - See Part Catalog
- Description: 6-Way F 1.2 MCON-LL Series, Sealed(BK)

Terminal Part Information

Terminal Type ID	Terminated Lead	Diagnostic Test Probe	Terminal Removal Tool
I	Not required	J-35616-16 (L-GN)	No Tool Required

B342A UHF Low Energy Remote Control Access Sensor Transceiver 1 (BOR / BOY)

Pin	Size	Color	Circuit	Function	Terminal Type ID	Option
(1) 1	(1) 0.5	(1) RD / GN	(1) 3140	(1) Battery Positive Voltage	(1) I	(1) —
2 - 3	—	—	—	Not Occupied	—	—
(4) 4	(4) 0.5	(4) BU / BN	(4) 11326	(4) Virtual Key Private CAN Bus [+] Serial Data	(4) I	(4) —
(5) 5	(5) 0.5	(5) WH / YE	(5) 11325	(5) Virtual Key Private CAN Bus [-] Serial Data	(5) I	(5) —
(6) 6	(6) 0.5	(6) BK / WH	(6) 251	(6) Signal Ground	(6) I	(6) —

B342B UHF Low Energy Remote Control Access Sensor Transceiver 2 (BOR / BOY)

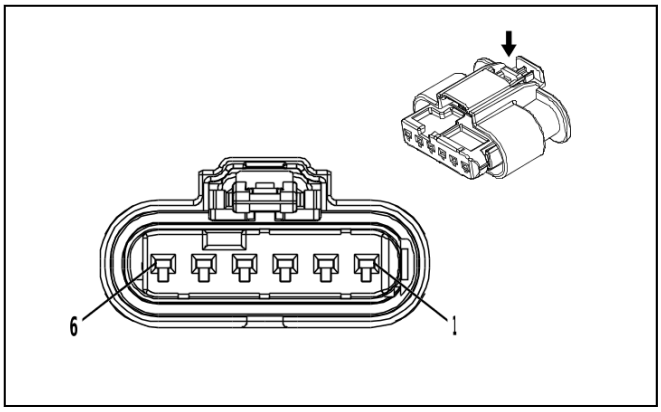

4455148

Connector Part Information

- Harness Type: Rear Object Alarm Sensor Wiring Harness
- OEM Connector: 34900-6228
- Service Connector: Service by Harness - See Part Catalog
- Description: 6-Way F 1.2 MCON-LL Series, Sealed(BK)

Terminal Part Information

Terminal Type ID	Terminated Lead	Diagnostic Test Probe	Terminal Removal Tool
I	Not required	J-35616-16 (L-GN)	No Tool Required

B342B UHF Low Energy Remote Control Access Sensor Transceiver 2 (BOR / BOY)

Pin	Size	Color	Circuit	Function	Terminal Type ID	Option
(1) 1	(1) 0.5	(1) RD / GY	(1) 4840	(1) Battery Positive Voltage	(1) I	(1) —
(2) 2	(2) 0.5	(2) WH / YE	(2) 11325	(2) Virtual Key Private CAN Bus [-] Serial Data	(2) I	(2) —
(3) 3	(3) 0.5	(3) BU / BN	(3) 11326	(3) Virtual Key Private CAN Bus [+] Serial Data	(3) I	(3) —
(4) 4	(4) 0.5	(4) BU / BN	(4) 11326	(4) Virtual Key Private CAN Bus [+] Serial Data	(4) I	(4) —
(5) 5	(5) 0.5	(5) WH / YE	(5) 11325	(5) Virtual Key Private CAN Bus [-] Serial Data	(5) I	(5) —
(6) 6	(6) 0.5	(6) BK	(6) 1450	(6) Ground	(6) I	(6) —

B342C UHF Low Energy Remote Control Access Sensor Transceiver 3 (BOR / BOY)

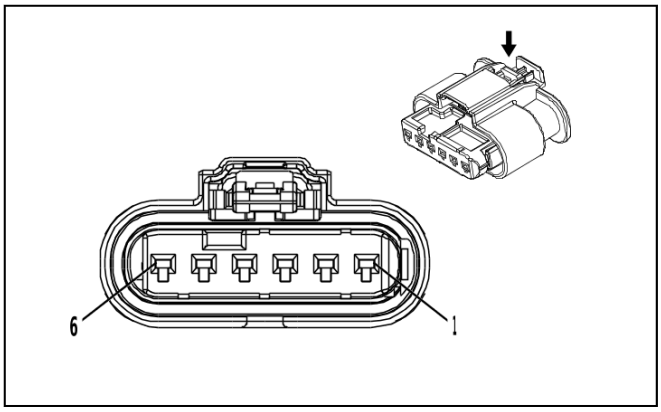

4455148

Connector Part Information

- Harness Type: Front Object Alarm Sensor Wiring Harness
- OEM Connector: 34900-6228
- Service Connector: Service by Harness - See Part Catalog
- Description: 6-Way F 1.2 MCON-LL Series, Sealed(BK)

Terminal Part Information

Terminal Type ID	Terminated Lead	Diagnostic Test Probe	Terminal Removal Tool
I	Not required	J-35616-16 (L-GN)	No Tool Required

B342C UHF Low Energy Remote Control Access Sensor Transceiver 3 (BOR / BOY)

Pin	Size	Color	Circuit	Function	Terminal Type ID	Option
(1) 1	(1) 0.5	(1) RD / GN	(1) 3140	(1) Battery Positive Voltage	(1) I	(1) —
(2) 2	(2) 0.5	(2) WH / YE	(2) 11325	(2) Virtual Key Private CAN Bus [-] Serial Data	(2) I	(2) —
(3) 3	(3) 0.5	(3) BU / BN	(3) 11326	(3) Virtual Key Private CAN Bus [+] Serial Data	(3) I	(3) —
(4) 4	(4) 0.5	(4) BU / BN	(4) 11326	(4) Virtual Key Private CAN Bus [+] Serial Data	(4) I	(4) —
(5) 5	(5) 0.5	(5) WH / YE	(5) 11325	(5) Virtual Key Private CAN Bus [-] Serial Data	(5) I	(5) —
(6) 6	(6) 0.5	(6) BK / WH	(6) 251	(6) Signal Ground	(6) I	(6) —

B342D UHF Low Energy Remote Control Access Sensor Transceiver 4 (BOR / BOY)

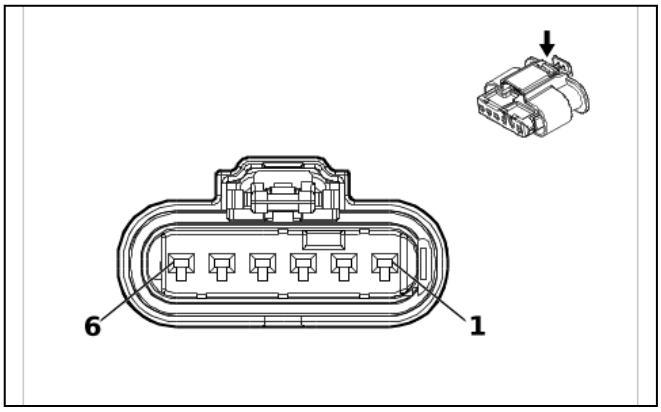

5835086

Connector Part Information

- Harness Type: Rear Object Alarm Sensor Wiring Harness
- OEM Connector: 34900-6221
- Service Connector: Service by Harness - See Part Catalog
- Description: 6-Way F 1.2 MCON-LL Series, Sealed(BK)

Terminal Part Information

Terminal Type ID	Terminated Lead	Diagnostic Test Probe	Terminal Removal Tool
I	Not required	J-35616-16 (L-GN)	No Tool Required

B342D UHF Low Energy Remote Control Access Sensor Transceiver 4 (BOR / BOY)

Pin	Size	Color	Circuit	Function	Terminal Type ID	Option
(1) 1	(1) 0.5	(1) RD / GY	(1) 4840	(1) Battery Positive Voltage	(1) I	(1) —
2	—	—	—	Not Occupied	—	—
(3) 3	(3) 0.5	(3) BK	(3) 1450	(3) Ground	(3) I	(3) —
(4) 4	(4) 0.5	(4) BU / BN	(4) 11326	(4) Virtual Key Private CAN Bus [+] Serial Data	(4) I	(4) —
(5) 5	(5) 0.5	(5) WH / YE	(5) 11325	(5) Virtual Key Private CAN Bus [-] Serial Data	(5) I	(5) —
(6) 6	(6) 0.5	(6) BK	(6) 1450	(6) Ground	(6) I	(6) —

B342E UHF Low Energy Remote Control Access Sensor Transceiver 5 (BOR / BOY)

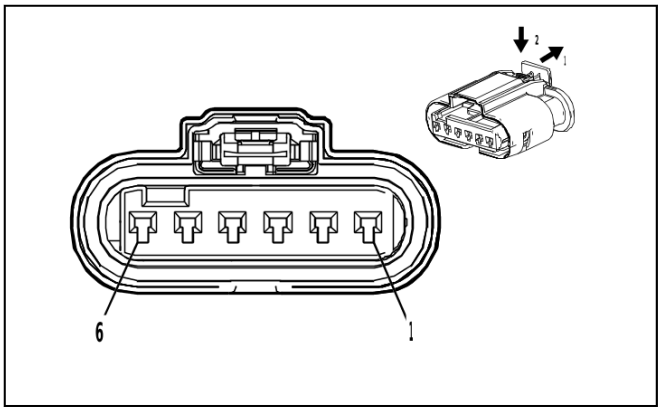

3960142

Connector Part Information

- Harness Type: Roof Wiring Harness
- OEM Connector: 34900-6219
- Service Connector: 85005020
- Description: 6-Way F 1.2 MCON-LL Series, Sealed(BK)

Terminal Part Information

Terminal Type ID	Terminated Lead	Diagnostic Test Probe	Terminal Removal Tool
I	Not required	J-35616-16 (L-GN)	No Tool Required

B342E UHF Low Energy Remote Control Access Sensor Transceiver 5 (BOR / BOY)

Pin	Size	Color	Circuit	Function	Terminal Type ID	Option
(1) 1	(1) 0.5	(1) RD / GY	(1) 4840	(1) Battery Positive Voltage	(1) I	(1) —
(2) 2	(2) 0.5	(2) WH / YE	(2) 11325	(2) Virtual Key Private CAN Bus [-] Serial Data	(2) I	(2) —
(3) 3	(3) 0.5	(3) BU / BN	(3) 11326	(3) Virtual Key Private CAN Bus [+] Serial Data	(3) I	(3) —
(4) 4	(4) 0.5	(4) BU / BN	(4) 11326	(4) Virtual Key Private CAN Bus [+] Serial Data	(4) I	(4) —
(5) 5	(5) 0.5	(5) WH / YE	(5) 11325	(5) Virtual Key Private CAN Bus [-] Serial Data	(5) I	(5) —
(6) 6	(6) 0.5	(6) BK	(6) 2050	(6) Ground	(6) I	(6) —

B345P Exhaust Pressure Differential Sensor - Particulate Filter (LZ0)

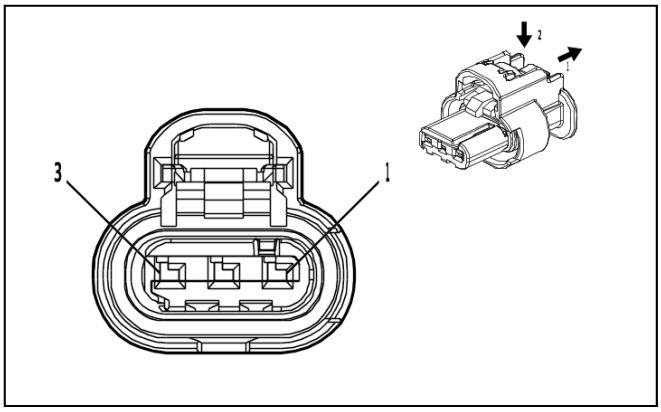

4581126

Connector Part Information

- Harness Type: Engine Wiring Harness
- OEM Connector: 1-2296695-1
- Service Connector: 86792094
- Description: 3-Way F 1.2 MCON-CB Series, Sealed(BK)

Terminal Part Information

Terminal Type ID	Terminated Lead	Diagnostic Test Probe	Terminal Removal Tool
I	Not required	J-35616-16 (L-GN)	No Tool Required

B345P Exhaust Pressure Differential Sensor - Particulate Filter (LZ0)

Pin	Size	Color	Circuit	Function	Terminal Type ID	Option
(1) 1	(1) 0.5	(1) BU / RD	(1) 460	(1) Engine Control Sensors 5 Volt Reference 1	(1) I	(1) —
(2) 2	(2) 0.5	(2) WH / BN	(2) 2363	(2) Exhaust Pressure Sensor SENT 1 Signal	(2) I	(2) —
(3) 3	(3) 0.5	(3) BK / YE	(3) 548	(3) Engine Control Sensors Low Reference 1	(3) I	(3) —

B345R Exhaust Pressure Differential Sensor - Exhaust Gas Recirculation (LZ0)

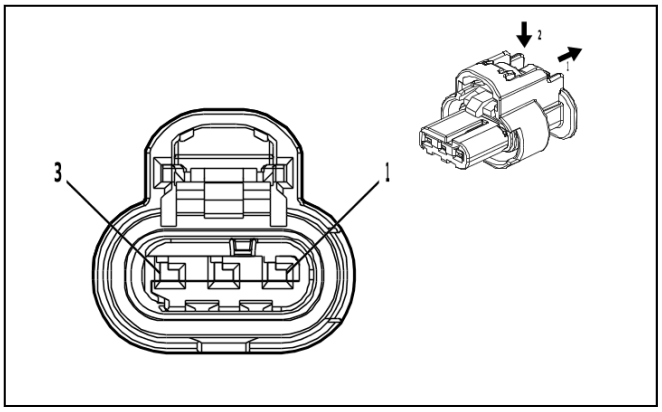

4778903

Connector Part Information

- Harness Type: Engine Wiring Harness
- OEM Connector: 1-2296695-2
- Service Connector: 86792095
- Description: 3-Way F 1.2 MCON-CB Series, Sealed(BK)

Terminal Part Information

Terminal Type ID	Terminated Lead	Diagnostic Test Probe	Terminal Removal Tool
I	Not required	J-35616-16 (L-GN)	No Tool Required

B345R Exhaust Pressure Differential Sensor - Exhaust Gas Recirculation (LZ0)

Pin	Size	Color	Circuit	Function	Terminal Type ID	Option
(1) 1	(1) 0.5	(1) BU / RD	(1) 460	(1) Engine Control Sensors 5 Volt Reference 1	(1) I	(1) —
(2) 2	(2) 0.5	(2) GN	(2) 10478	(2) Low Pressure Exhaust Gas Recirculation Sensor SENT Signal	(2) I	(2) —
(3) 3	(3) 0.5	(3) BK / YE	(3) 548	(3) Engine Control Sensors Low Reference 1	(3) I	(3) —

B350B Interior View Camera (UCV)

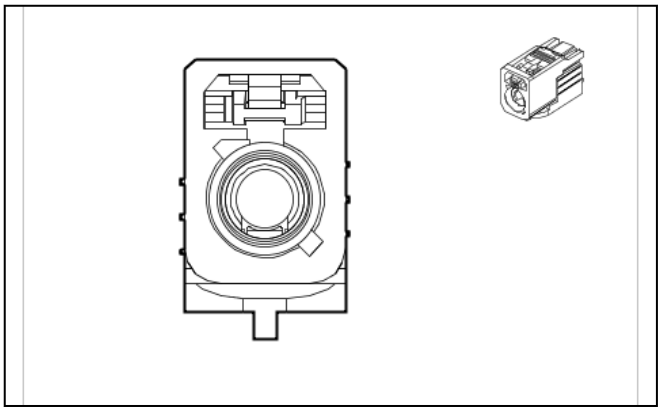

6650713

Connector Part Information
- Harness Type: Headlining Trim Panel Harness COAX
- OEM Connector: 13516414
- Service Connector: Service by Cable Assembly — See Part Catalog
- Description: 1-Way F Coax Type(GY)

Terminal Part Information

Terminal Type ID	Terminated Lead	Diagnostic Test Probe	Terminal Removal Tool
I	Not required	No Tool Required	No Tool Required

B350B Interior View Camera (UCV)

Pin	Size	Color	Circuit	Function	Terminal Type ID	Option
—	—	Coax Cable	—	Interior Vision Cabin Camera Coaxial Signal	I	—

B352 Video Display Inside Rearview Mirror Camera (DRZ)

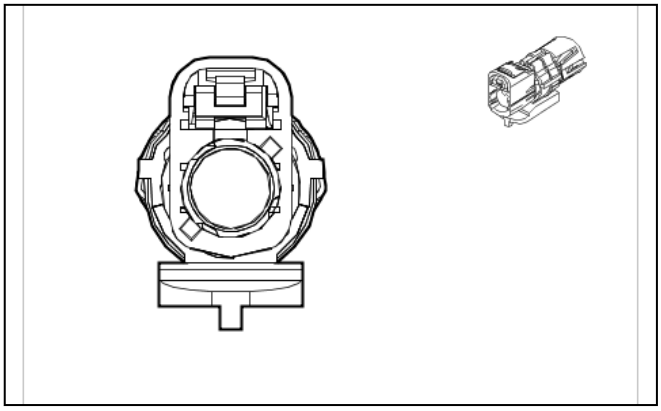

5633894

Connector Part Information
- Harness Type: Rear License Plate Lamp Wiring Harness COAX
- OEM Connector: 35187049
- Service Connector: Service by Cable Assembly — See Part Catalog
- Description: 1-Way F Coax Type, Sealed(BU)

Terminal Part Information

Terminal Type ID	Terminated Lead	Diagnostic Test Probe	Terminal Removal Tool
I	Not required	No Tool Required	No Tool Required

B352 Video Display Inside Rearview Mirror Camera (DRZ)

Pin	Size	Color	Circuit	Function	Terminal Type ID	Option
—	—	Coax Cable	—	Full Display Mirror Rear Camera Coaxial Video Signal	I	—

B355HLF Communication Interface Module Headliner Microphone - Left Front

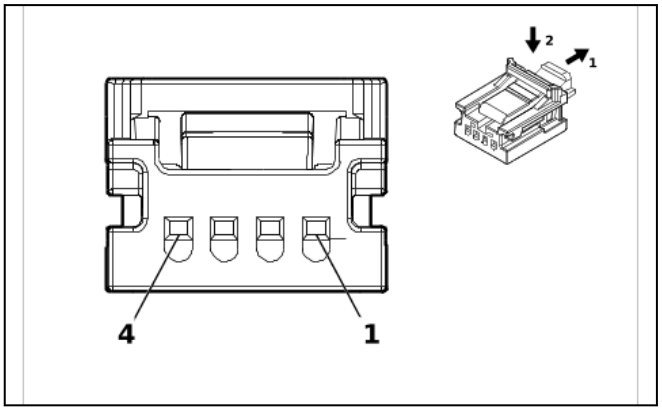

5493278

Connector Part Information

- Harness Type: Headlining Trim Panel Harness
- OEM Connector: 34791-5140
- Service Connector: 19354840
- Description: 4-Way F Mini 50 Series(BK)

Terminal Part Information

Terminal Type ID	Terminated Lead	Diagnostic Test Probe	Terminal Removal Tool
I	Service by Cable	EL-35616-58 (BK)	EL-38125-58

B355HLF Communication Interface Module Headliner Microphone - Left Front

Pin	Size	Color	Circuit	Function	Terminal Type ID	Option
(1) 1	(1) 0.35	(1) BU	(1) 8579	(1) Automotive Audio Bus A2B Serial Data 1 [-]	(1) I	(1) —
(2) 2	(2) 0.35	(2) GN	(2) 8580	(2) Automotive Audio Bus A2B Serial Data 1 [+]	(2) I	(2) —
(3) 3	(3) 0.35	(3) GN	(3) 8580	(3) Automotive Audio Bus A2B Serial Data 1 [+]	(3) I	(3) —
(4) 4	(4) 0.35	(4) BU	(4) 8579	(4) Automotive Audio Bus A2B Serial Data 1 [-]	(4) I	(4) —

B355HRF Communication Interface Module Headliner Microphone - Right Front

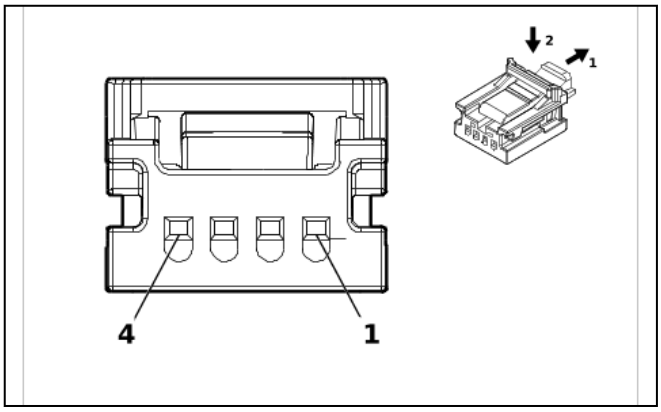

5493278

Connector Part Information

- Harness Type: Headlining Trim Panel Harness
- OEM Connector: 34791-5140
- Service Connector: 19354840
- Description: 4-Way F Mini 50 Series(BK)

Terminal Part Information

Terminal Type ID	Terminated Lead	Diagnostic Test Probe	Terminal Removal Tool
I	Service by Cable	EL-35616-58 (BK)	EL-38125-58

B355HRF Communication Interface Module Headliner Microphone - Right Front

Pin	Size	Color	Circuit	Function	Terminal Type ID	Option
(1) 1	(1) 0.35	(1) BU	(1) 8579	(1) Automotive Audio Bus A2B Serial Data 1 [-]	(1) I	(1) —
(2) 2	(2) 0.35	(2) GN	(2) 8580	(2) Automotive Audio Bus A2B Serial Data 1 [+]	(2) I	(2) —
(3) 3	(3) 0.35	(3) GN	(3) 8580	(3) Automotive Audio Bus A2B Serial Data 1 [+]	(3) I	(3) —
(4) 4	(4) 0.35	(4) BU	(4) 8579	(4) Automotive Audio Bus A2B Serial Data 1 [-]	(4) I	(4) —

B359 Exhaust Gas Temperature Sensor Module (LZ0)

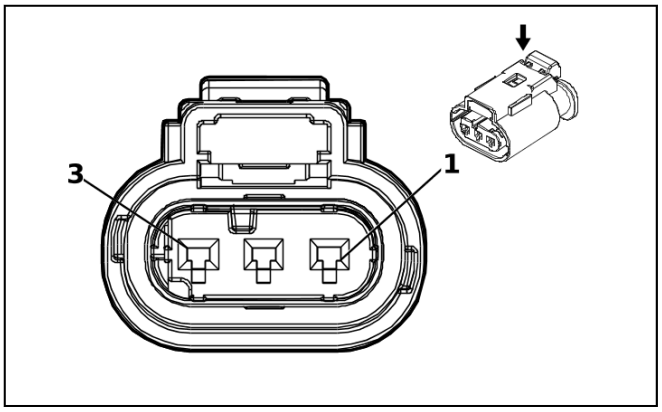

5192187

Connector Part Information

- Harness Type: Engine Wiring Harness
- OEM Connector: 10010343
- Service Connector: 84777453
- Description: 3-Way F 1.2 Multilock Series, Sealed(BK)

Terminal Part Information

Terminal Type ID	Terminated Lead	Diagnostic Test Probe	Terminal Removal Tool
I	Not required	J-35616-16 (L-GN)	No Tool Required

B359 Exhaust Gas Temperature Sensor Module (LZ0)

Pin	Size	Color	Circuit	Function	Terminal Type ID	Option
(1) 1	(1) 0.5	(1) GN	(1) 10289	(1) Exhaust Gas Temperature Sensor SENT 1 Signal	(1) I	(1) —
(2) 2	(2) 0.5	(2) BK / GN	(2) 580	(2) Engine Control Sensors Low Reference 2	(2) I	(2) —
(3) 3	(3) 0.5	(3) WH / RD	(3) 480	(3) Engine Control Vehicle Sensors 5 Volt Reference 1	(3) I	(3) —

B359B Exhaust Gas Temperature Sensor Module 2 (LZ0)

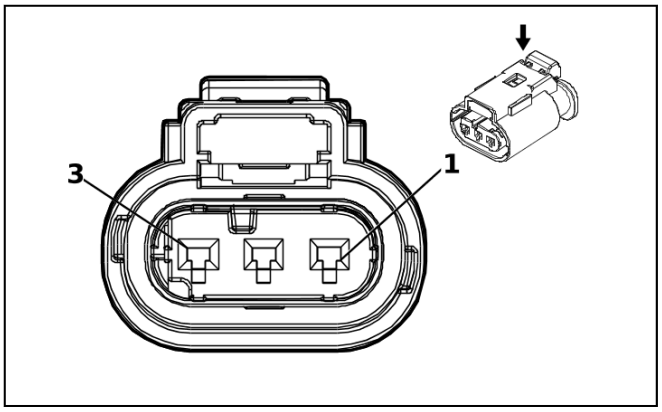

5192187

Connector Part Information

- Harness Type: Engine Wiring Harness
- OEM Connector: 10010343
- Service Connector: 84777453
- Description: 3-Way F 1.2 Multilock Series, Sealed(BK)

Terminal Part Information

Terminal Type ID	Terminated Lead	Diagnostic Test Probe	Terminal Removal Tool
I	Not required	J-35616-16 (L-GN)	No Tool Required

B359B Exhaust Gas Temperature Sensor Module 2 (LZ0)

Pin	Size	Color	Circuit	Function	Terminal Type ID	Option
(1) 1	(1) 0.5	(1) BU	(1) 10290	(1) Exhaust Gas Temperature Sensor SENT 2 Signal	(1) I	(1) —
(2) 2	(2) 0.5	(2) BK / GN	(2) 580	(2) Engine Control Sensors Low Reference 2	(2) I	(2) —
(3) 3	(3) 0.5	(3) WH / RD	(3) 480	(3) Engine Control Vehicle Sensors 5 Volt Reference 1	(3) I	(3) —

E2LF Front Side Marker Lamp - Left

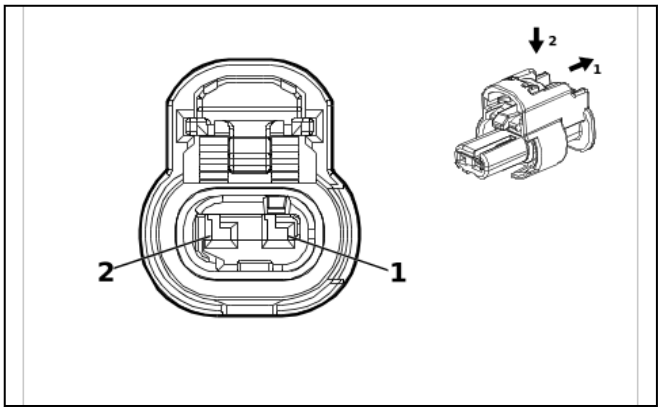

4649903

Connector Part Information
- Harness Type: Front Object Alarm Sensor Wiring Harness
- OEM Connector: 1-2296694-1
- Service Connector: Service by Harness - See Part Catalog
- Description: 2-Way F 1.2 MCON Series, Sealed(BK)

Terminal Part Information

Terminal Type ID	Terminated Lead	Diagnostic Test Probe	Terminal Removal Tool
I	Not required	J-35616-12 (BU)	No Tool Required

E2LF Front Side Marker Lamp - Left

Pin	Size	Color	Circuit	Function	Terminal Type ID	Option
(1) 1	(1) 0.5	(1) WH / YE	(1) 1254	(1) Left Front Park Lamp Control	(1) I	(1) —
(2) 2	(2) 0.5 (2) 0.75	(2) BK (2) BK	(2) 150 (2) 150	(2) Ground (2) Ground	(2) I (2) I	(2) T40 (2) - T40

E2RF Front Side Marker Lamp - Right

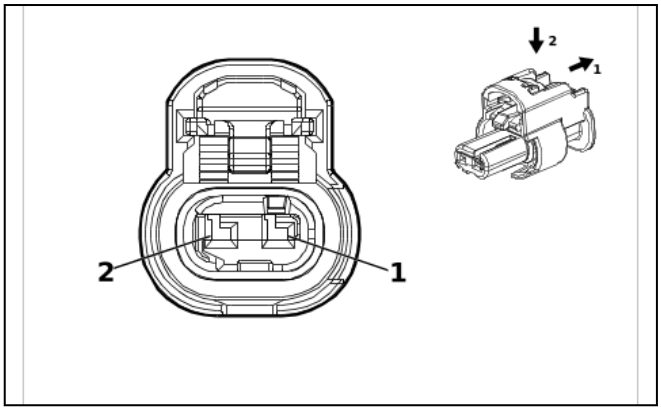

4649903

Connector Part Information
- Harness Type: Front Object Alarm Sensor Wiring Harness
- OEM Connector: 1-2296694-1
- Service Connector: Service by Harness - See Part Catalog
- Description: 2-Way F 1.2 MCON Series, Sealed(BK)

Terminal Part Information

Terminal Type ID	Terminated Lead	Diagnostic Test Probe	Terminal Removal Tool
I	Not required	J-35616-12 (BU)	No Tool Required

E2RF Front Side Marker Lamp - Right

Pin	Size	Color	Circuit	Function	Terminal Type ID	Option
(1) 1	(1) 0.5	(1) BU / GN	(1) 1253	(1) Right Front Park Lamp Control	(1) I	(1) —
(2) 2	(2) 0.5 (2) 0.75	(2) BK (2) BK	(2) 250 (2) 250	(2) Ground (2) Ground	(2) I (2) I	(2) T40 (2) - T40

E6 High Mount Stop Lamp

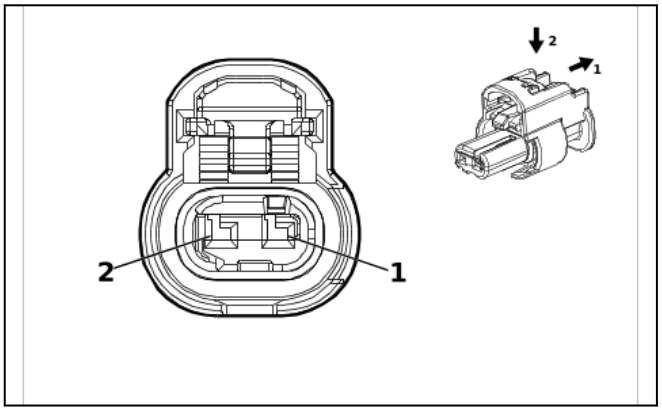

4649903

Connector Part Information

- Harness Type: High Mount Stop Lamp Wiring Harness
- OEM Connector: 13512365
- Service Connector: Service by Harness - See Part Catalog
- Description: 2-Way F 1.2 MCON Series, Sealed(BK)

Terminal Part Information

Terminal Type ID	Terminated Lead	Diagnostic Test Probe	Terminal Removal Tool
I	Not required	No Tool Required	No Tool Required

E6 High Mount Stop Lamp

Pin	Size	Color	Circuit	Function	Terminal Type ID	Option
(1) 1	(1) —	(1) BK	(1) 8350	(1) Antenna Filter Ground	(1) I	(1) —
(2) 2	(2) —	(2) BN / YE	(2) 820	(2) Center High Mounted Stop Lamp Supply Voltage	(2) I	(2) —

E7L Rear License Plate Lamp - Left

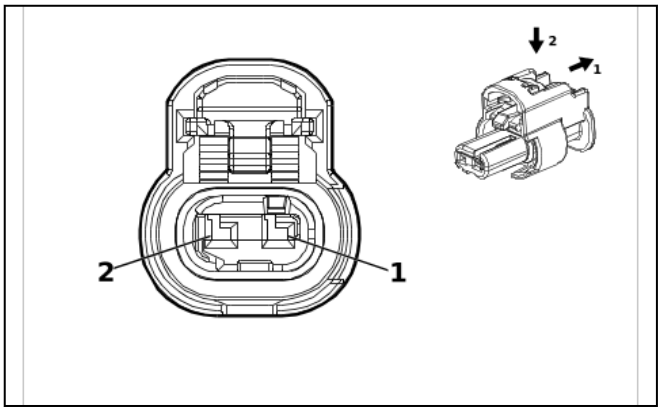

4649903

Connector Part Information
- Harness Type: Rear License Plate Lamp Wiring Harness
- OEM Connector: 1-2296694-1
- Service Connector: Service by Harness - See Part Catalog
- Description: 2-Way F 1.2 MCON Series, Sealed(BK)

Terminal Part Information

Terminal Type ID	Terminated Lead	Diagnostic Test Probe	Terminal Removal Tool
I	Not required	J-35616-12 (BU)	No Tool Required

E7L Rear License Plate Lamp - Left

Pin	Size	Color	Circuit	Function	Terminal Type ID	Option
(1) 1	(1) 0.35	(1) BK	(1) 2050	(1) Ground	(1) I	(1) —
(2) 2	(2) 0.35	(2) GN / YE	(2) 6846	(2) Rear License Plate Lamp Control	(2) I	(2) —

E7R Rear License Plate Lamp - Right

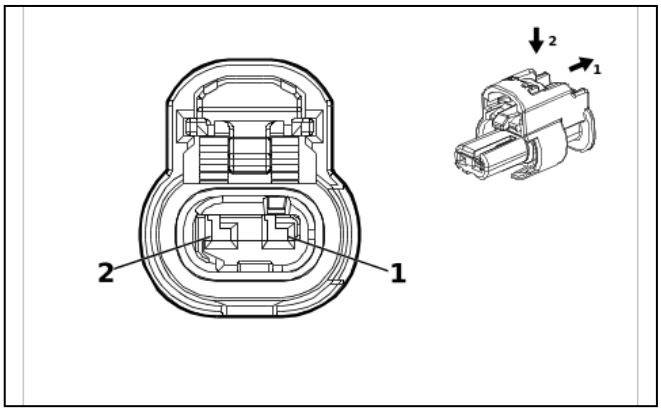

4649903

Connector Part Information
- Harness Type: Rear License Plate Lamp Wiring Harness
- OEM Connector: 1-2296694-1
- Service Connector: Service by Harness - See Part Catalog
- Description: 2-Way F 1.2 MCON Series, Sealed(BK)

Terminal Part Information

Terminal Type ID	Terminated Lead	Diagnostic Test Probe	Terminal Removal Tool
I	Not required	J-35616-12 (BU)	No Tool Required

E7R Rear License Plate Lamp - Right

Pin	Size	Color	Circuit	Function	Terminal Type ID	Option
(1) 1	(1) 0.35	(1) BK	(1) 2050	(1) Ground	(1) I	(1) —
(2) 2	(2) 0.35	(2) GN / YE	(2) 6846	(2) Rear License Plate Lamp Control	(2) I	(2) —

E8A Front Side Door Sill Plate Illumination Lamp - Left (S0M)

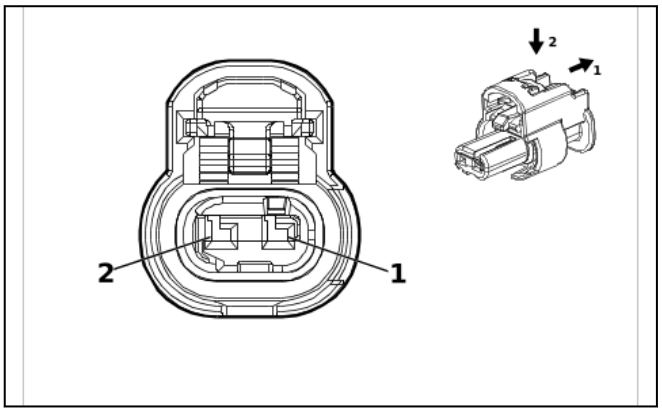

4649903

Connector Part Information

- Harness Type: Door Sill Plate Lamp Accessory Wiring HarnesS
- OEM Connector: 13512365
- Service Connector: Service by Harness - See Part Catalog
- Description: 2-Way F 1.2 MCON Series, Sealed(BK)

Terminal Part Information

Terminal Type ID	Terminated Lead	Diagnostic Test Probe	Terminal Removal Tool
I	Not required	J-35616-12 (BU)	No Tool Required

E8A Front Side Door Sill Plate Illumination Lamp - Left (S0M)

Pin	Size	Color	Circuit	Function	Terminal Type ID	Option
(1) 1	(1) 0.35	(1) VT	(1) 7558	(1) Front Footwell Accent Lighting Control	(1) I	(1) —
(2) 2	(2) 0.5	(2) BK	(2) 1250	(2) Ground	(2) I	(2) —

E8B Front Side Door Sill Plate Illumination Lamp - Right (S0M)

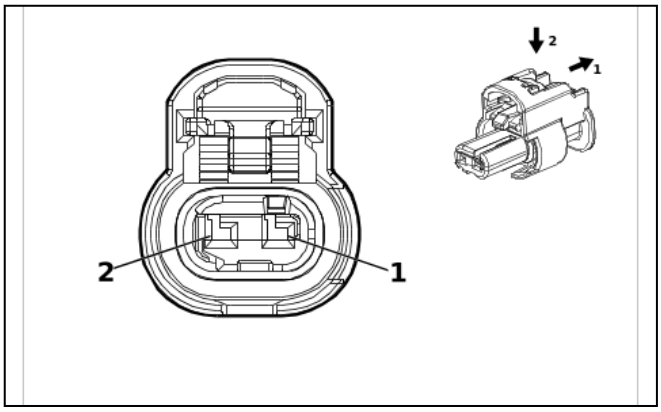

4649903

Connector Part Information
- Harness Type: Door Sill Plate Lamp Accessory Wiring HarnesS
- OEM Connector: 13512365
- Service Connector: Service by Harness - See Part Catalog
- Description: 2-Way F 1.2 MCON Series, Sealed(BK)

Terminal Part Information

Terminal Type ID	Terminated Lead	Diagnostic Test Probe	Terminal Removal Tool
I	Not required	J-35616-12 (BU)	No Tool Required

E8B Front Side Door Sill Plate Illumination Lamp - Right (S0M)

Pin	Size	Color	Circuit	Function	Terminal Type ID	Option
(1) 1	(1) 0.35	(1) VT	(1) 7558	(1) Front Footwell Accent Lighting Control	(1) I	(1) —
(2) 2	(2) 0.5	(2) BK	(2) 1250	(2) Ground	(2) I	(2) —

E8Q Rear Side Door Sill Plate Illumination Lamp - Left (S0M)

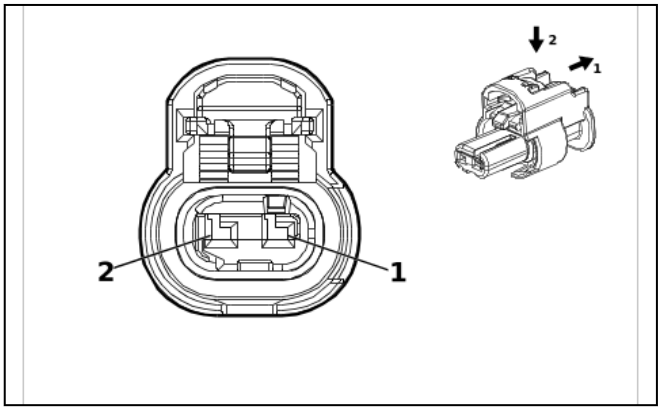

4649903

Connector Part Information
- Harness Type: Door Sill Plate Lamp Accessory Wiring Harness
- OEM Connector: 13512365
- Service Connector: Service by Harness - See Part Catalog
- Description: 2-Way F 1.2 MCON Series, Sealed(BK)

Terminal Part Information

Terminal Type ID	Terminated Lead	Diagnostic Test Probe	Terminal Removal Tool
I	Not required	J-35616-12 (BU)	No Tool Required

E8Q Rear Side Door Sill Plate Illumination Lamp - Left (S0M)

Pin	Size	Color	Circuit	Function	Terminal Type ID	Option
(1) 1	(1) 0.35	(1) YE	(1) 4783	(1) Rear Footwell Accent Lighting Control	(1) I	(1) —
(2) 2	(2) 0.5	(2) BK	(2) 1250	(2) Ground	(2) I	(2) —

E8R Rear Side Door Sill Plate Illumination Lamp - Right (S0M)

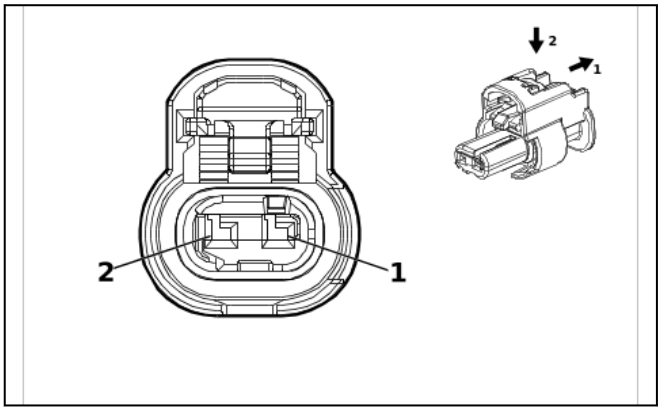

4649903

Connector Part Information

- Harness Type: Door Sill Plate Lamp Accessory Wiring Harness
- OEM Connector: 13512365
- Service Connector: Service by Harness - See Part Catalog
- Description: 2-Way F 1.2 MCON Series, Sealed(BK)

Terminal Part Information

Terminal Type ID	Terminated Lead	Diagnostic Test Probe	Terminal Removal Tool
I	Not required	J-35616-12 (BU)	No Tool Required

E8R Rear Side Door Sill Plate Illumination Lamp - Right (S0M)

Pin	Size	Color	Circuit	Function	Terminal Type ID	Option
(1) 1	(1) 0.35	(1) YE	(1) 4783	(1) Rear Footwell Accent Lighting Control	(1) I	(1) —
(2) 2	(2) 0.5	(2) BK	(2) 1250	(2) Ground	(2) I	(2) —

E8SR Cargo Center Courtesy Lamp

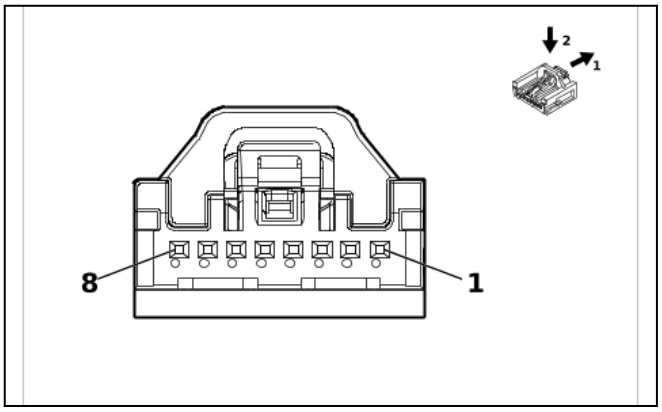

5810859

Connector Part Information

- Harness Type: Roof Wiring Harness
- OEM Connector: 35068230
- Service Connector: 87822422
- Description: 8-Way F Mini 50 Series(GY)

Terminal Part Information

Terminal Type ID	Terminated Lead	Diagnostic Test Probe	Terminal Removal Tool
I	Not required	EL-35616-58 (BK)	No Tool Required

E8SR Cargo Center Courtesy Lamp

Pin	Size	Color	Circuit	Function	Terminal Type ID	Option
(1) 1	(1) 0.35	(1) GN / GY	(1) 737	(1) Rear Compartment Courtesy Lamp Control	(1) I	(1) —
2	—	—	—	Not Occupied	—	—
(3) 3	(3) 0.35	(3) BK	(3) 2050	(3) Ground	(3) I	(3) —
4 - 8	—	—	—	Not Occupied	—	—

E8VA Front Floor Courtesy Lamp - Left

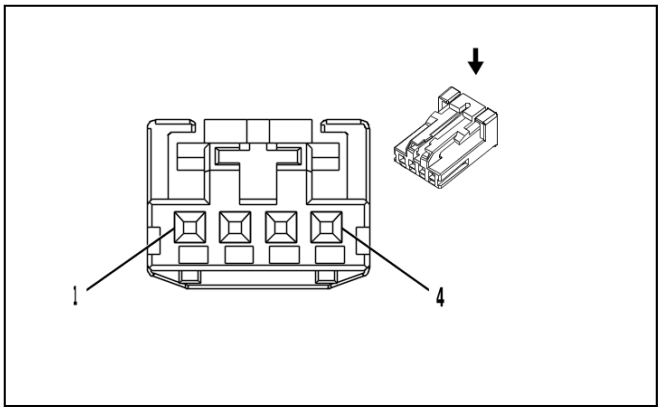

2717162

Connector Part Information

- Harness Type: Instrument Panel Wiring Harness
- OEM Connector: 1-936119-1
- Service Connector: 19367524
- Description: 4-Way F 0.64 Micro-Quadlock Series(BK)

Terminal Part Information

Terminal Type ID	Terminated Lead	Diagnostic Test Probe	Terminal Removal Tool
I	Not required	J-35616-64B (L-BU)	No Tool Required

E8VA Front Floor Courtesy Lamp - Left

Pin	Size	Color	Circuit	Function	Terminal Type ID	Option
(1) 1	(1) 0.35	(1) BK	(1) 1850	(1) Ground	(1) I	(1) —
(2) 2	(2) 0.35	(2) WH / BK	(2) 4782	(2) Instrument Panel Accent Lighting Control	(2) I	(2) —
(3) 3	(3) 0.5	(3) GY	(3) 157	(3) Interior Lamp Control	(3) I	(3) —
4	—	—	—	Not Occupied	—	—

E8VB Rear Floor Courtesy Lamp - Left

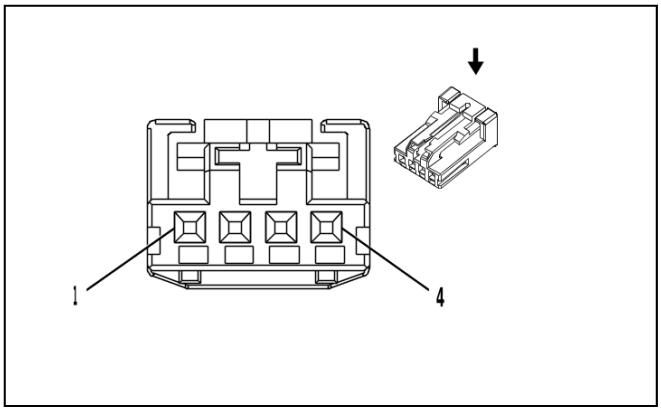

2717162

Connector Part Information

- Harness Type: Front Seat Wiring Harness - Driver
- OEM Connector: 13582963
- Service Connector: Service by Harness - See Part Catalog
- Description: 4-Way F 0.64 Micro-Quadlock Series(BK)

Terminal Part Information

Terminal Type ID	Terminated Lead	Diagnostic Test Probe	Terminal Removal Tool
I	Not required	No Tool Required	No Tool Required

E8VB Rear Floor Courtesy Lamp - Left

Pin	Size	Color	Circuit	Function	Terminal Type ID	Option
(1) 1	(1) —	(1) BK	(1) 1150	(1) Ground	(1) I	(1) —
2	—	—	—	Not Occupied	—	—
(3) 3	(3) —	(3) GY	(3) 157	(3) Interior Lamp Control	(3) I	(3) —
4	—	—	—	Not Occupied	—	—

E8VC Front Floor Courtesy Lamp - Right

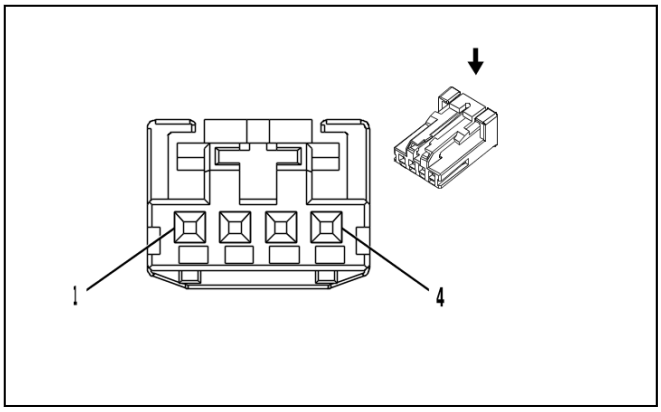

2717162

Connector Part Information

- Harness Type: Instrument Panel Wiring Harness
- OEM Connector: 1-936119-1
- Service Connector: 19367524
- Description: 4-Way F 0.64 Micro-Quadlock Series(BK)

Terminal Part Information

Terminal Type ID	Terminated Lead	Diagnostic Test Probe	Terminal Removal Tool
I	Not required	J-35616-64B (L-BU)	No Tool Required

E8VC Front Floor Courtesy Lamp - Right

Pin	Size	Color	Circuit	Function	Terminal Type ID	Option
(1) 1	(1) 0.35	(1) BK	(1) 1050	(1) Ground	(1) I	(1) —
(2) 2	(2) 0.35	(2) WH / BK	(2) 4782	(2) Instrument Panel Accent Lighting Control	(2) I	(2) —
(3) 3	(3) 0.5	(3) GY	(3) 157	(3) Interior Lamp Control	(3) I	(3) —
4	—	—	—	Not Occupied	—	—

E8VD Rear Floor Courtesy Lamp - Right

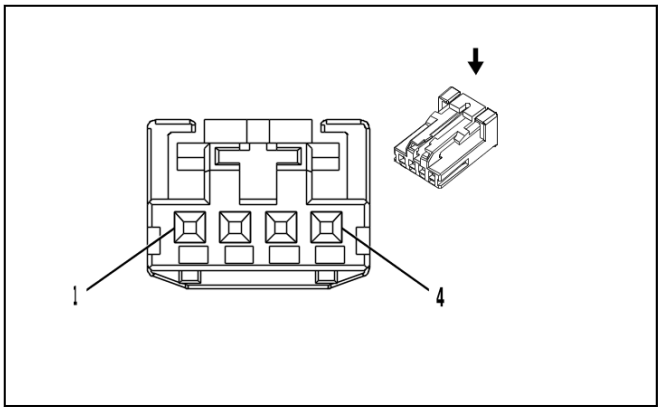

2717162

Connector Part Information

- Harness Type: Front Seat Wiring Harness - Passenger
- OEM Connector: 13582963
- Service Connector: Service by Harness - See Part Catalog
- Description: 4-Way F 0.64 Micro-Quadlock Series(BK)

Terminal Part Information

Terminal Type ID	Terminated Lead	Diagnostic Test Probe	Terminal Removal Tool
I	Not required	No Tool Required	No Tool Required

E8VD Rear Floor Courtesy Lamp - Right

Pin	Size	Color	Circuit	Function	Terminal Type ID	Option
(1) 1	(1) 0.5	(1) BK	(1) 1250	(1) Ground	(1) I	(1) —
2	—	—	—	Not Occupied	—	—
(3) 3	(3) 0.5	(3) GY	(3) 157	(3) Interior Lamp Control	(3) I	(3) —
4	—	—	—	Not Occupied	—	—

E8ZL Assist Step Lamp - Left (B3L)

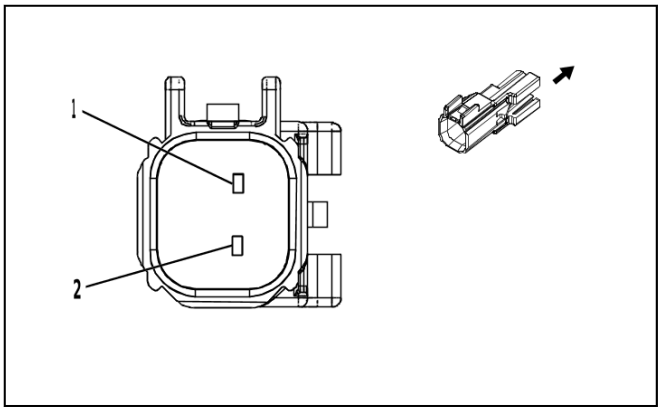

3271068

Connector Part Information
- Harness Type: Left Assist Step
- OEM Connector: 13503926
- Service Connector: Service by Harness - See Part Catalog
- Description: 2-Way M 1.5 Series, Sealed(BK)

Terminal Part Information

Terminal Type ID	Terminated Lead	Diagnostic Test Probe	Terminal Removal Tool
I	Not required	No Tool Required	No Tool Required

E8ZL Assist Step Lamp - Left (B3L)

Pin	Size	Color	Circuit	Function	Terminal Type ID	Option
(1) 1	(1) 0.5	(1) BK	(1) 1650	(1) Ground	(1) I	(1) —
(2) 2	(2) 0.5	(2) BN	(2) 4748	(2) Left Running Board Step Courtesy Lamp Control	(2) I	(2) —

E8ZR Assist Step Lamp - Right (B3L)

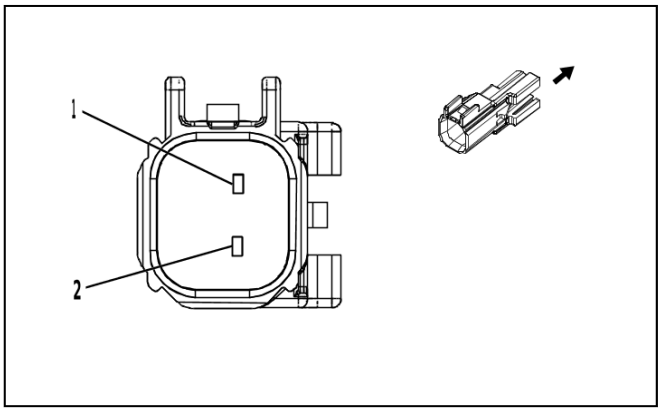

3271068

Connector Part Information
- Harness Type: Right Assist Step
- OEM Connector: 13503926
- Service Connector: Service by Harness - See Part Catalog
- Description: 2-Way M 1.5 Series, Sealed(BK)

Terminal Part Information

Terminal Type ID	Terminated Lead	Diagnostic Test Probe	Terminal Removal Tool
I	Not required	No Tool Required	No Tool Required

E8ZR Assist Step Lamp - Right (B3L)

Pin	Size	Color	Circuit	Function	Terminal Type ID	Option
(1) 1	(1) 0.5	(1) BK	(1) 1650	(1) Ground	(1) I	(1) —
(2) 2	(2) 0.5	(2) GY / VT	(2) 4749	(2) Right Running Board Step Courtesy Lamp Control	(2) I	(2) —

E9LGL Emergency Vehicle Warning Rear Lamp - Liftgate Left (5W4 / 9C1)

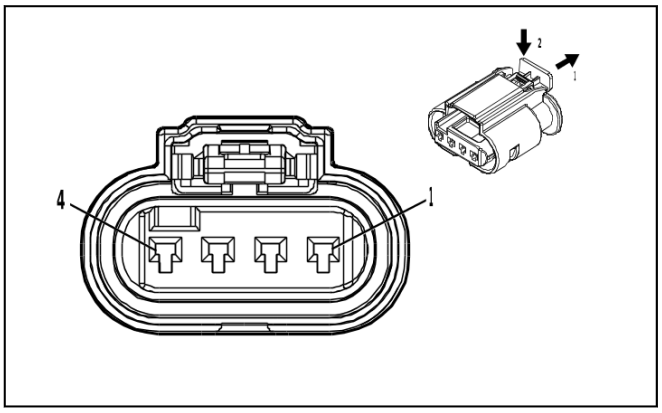

4994577

Connector Part Information

- Harness Type: Liftgate Wiring Harness
- OEM Connector: 34900-4120
- Service Connector: Service by Harness - See Part Catalog
- Description: 4-Way F 1.2 MCON-CB Series, Sealed(BK)

Terminal Part Information

Terminal Type ID	Terminated Lead	Diagnostic Test Probe	Terminal Removal Tool
I	Not required	J-35616-16 (L-GN)	No Tool Required

E9LGL Emergency Vehicle Warning Rear Lamp - Liftgate Left (5W4 / 9C1)

Pin	Size	Color	Circuit	Function	Terminal Type ID	Option
(1) 1	(1) 0.75	(1) VT	(1) 8866	(1) Police Liftgate Strobe Control	(1) I	(1) —
(2) 2	(2) 0.75	(2) BK	(2) 2050	(2) Ground	(2) I	(2) —
(3) 3	(3) 0.75	(3) WH	(3) 8867	(3) Police Liftgate Strobe Synchronization Signal	(3) I	(3) —
4	—	—	—	Not Occupied	—	—

E9LGR Emergency Vehicle Warning Rear Lamp - Liftgate Right (5W4 / 9C1)

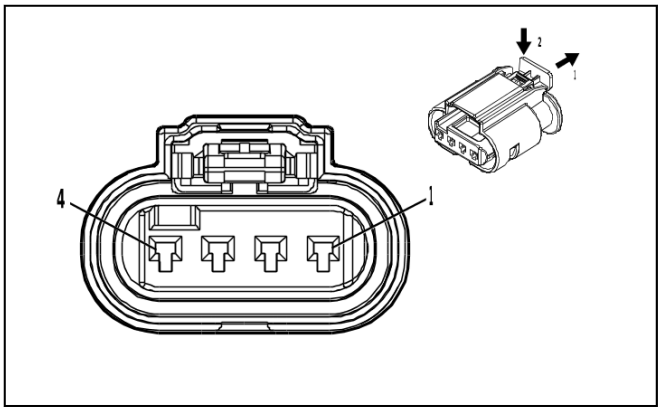

4994577

Connector Part Information

- Harness Type: Liftgate Wiring Harness
- OEM Connector: 34900-4120
- Service Connector: Service by Harness - See Part Catalog
- Description: 4-Way F 1.2 MCON-CB Series, Sealed(BK)

Terminal Part Information

Terminal Type ID	Terminated Lead	Diagnostic Test Probe	Terminal Removal Tool
I	Not required	J-35616-16 (L-GN)	No Tool Required

E9LGR Emergency Vehicle Warning Rear Lamp - Liftgate Right (5W4 / 9C1)

Pin	Size	Color	Circuit	Function	Terminal Type ID	Option
(1) 1	(1) 0.75	(1) VT	(1) 8866	(1) Police Liftgate Strobe Control	(1) I	(1) —
(2) 2	(2) 0.75	(2) BK	(2) 2050	(2) Ground	(2) I	(2) —
(3) 3	(3) 0.75	(3) WH	(3) 8867	(3) Police Liftgate Strobe Synchronization Signal	(3) I	(3) —
4	—	—	—	Not Occupied	—	—

E12A Glow Plug 1 (LZ0)

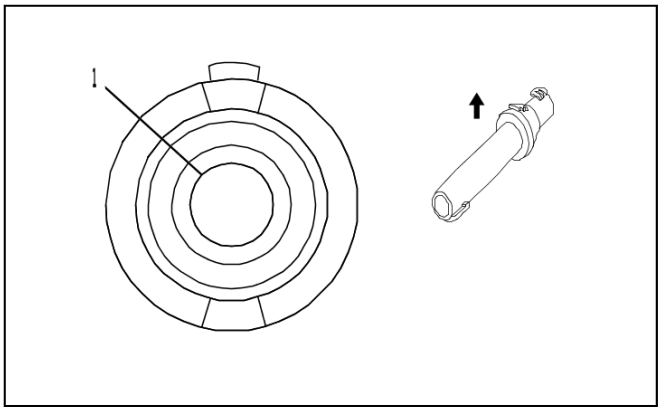

2231591

Connector Part Information
- Harness Type: Diesel Glow Plug Wiring Harness
- OEM Connector: 284818-1
- Service Connector: Service by Cable Assembly - See Part Catalog
- Description: 1-Way F 4.0 Series(BK)

Terminal Part Information

Terminal Type ID	Terminated Lead	Diagnostic Test Probe	Terminal Removal Tool
I	Not required	No Tool Required	No Tool Required

E12A Glow Plug 1 (LZ0)

Pin	Size	Color	Circuit	Function	Terminal Type ID	Option
(1) 1	(1) 2.5	(1) GY / RD	(1) 1581	(1) Glow Plug 1 Control	(1) I	(1) —

E12B Glow Plug 2 (LZ0)

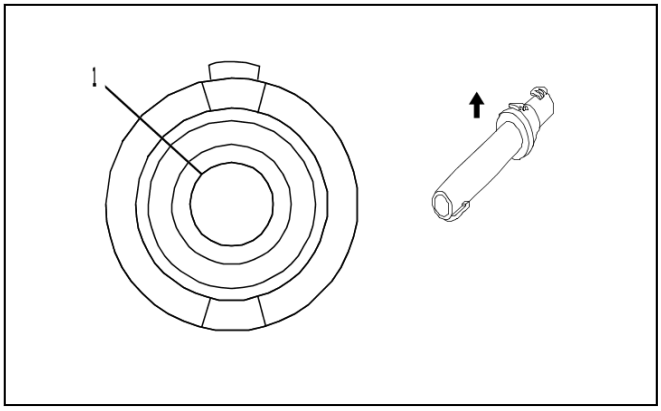

2231591

Connector Part Information
- Harness Type: Diesel Glow Plug Wiring Harness
- OEM Connector: 284818-1
- Service Connector: Service by Cable Assembly - See Part Catalog
- Description: 1-Way F 4.0 Series(BK)

Terminal Part Information

Terminal Type ID	Terminated Lead	Diagnostic Test Probe	Terminal Removal Tool
I	Not required	No Tool Required	No Tool Required

E12B Glow Plug 2 (LZ0)

Pin	Size	Color	Circuit	Function	Terminal Type ID	Option
(1) 1	(1) 2.5	(1) GY / BK	(1) 1582	(1) Glow Plug 2 Control	(1) I	(1) —

E12C Glow Plug 3 (LZ0)

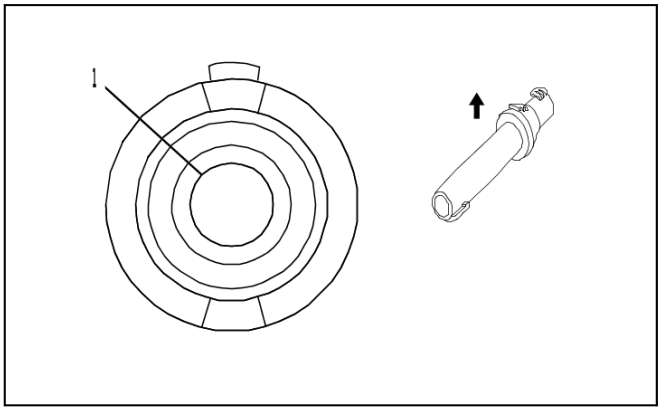

2231591

Connector Part Information

- Harness Type: Diesel Glow Plug Wiring Harness
- OEM Connector: 284818-1
- Service Connector: Service by Cable Assembly - See Part Catalog
- Description: 1-Way F 4.0 Series(BK)

Terminal Part Information

Terminal Type ID	Terminated Lead	Diagnostic Test Probe	Terminal Removal Tool
I	Not required	No Tool Required	No Tool Required

E12C Glow Plug 3 (LZ0)

Pin	Size	Color	Circuit	Function	Terminal Type ID	Option
(1) 1	(1) 2.5	(1) GY / GN	(1) 1583	(1) Glow Plug 3 Control	(1) I	(1) —

E12D Glow Plug 4 (LZ0)

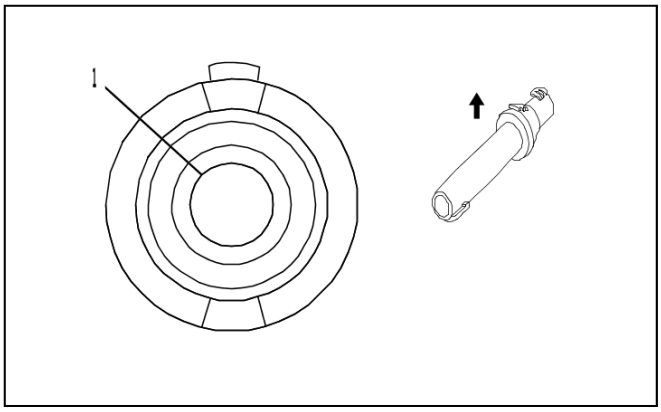

2231591

Connector Part Information
- Harness Type: Diesel Glow Plug Wiring Harness
- OEM Connector: 284818-1
- Service Connector: Service by Cable Assembly - See Part Catalog
- Description: 1-Way F 4.0 Series(BK)

Terminal Part Information

Terminal Type ID	Terminated Lead	Diagnostic Test Probe	Terminal Removal Tool
I	Not required	No Tool Required	No Tool Required

E12D Glow Plug 4 (LZ0)

Pin	Size	Color	Circuit	Function	Terminal Type ID	Option
(1) 1	(1) 2.5	(1) GY / YE	(1) 1584	(1) Glow Plug 4 Control	(1) I	(1) —

E12E Glow Plug 5 (LZ0)

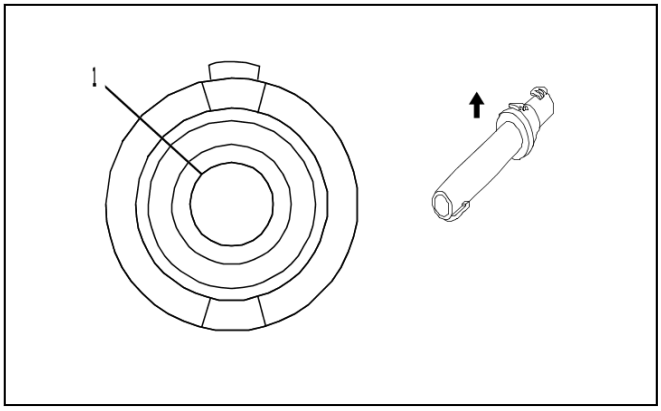

2231591

Connector Part Information
- Harness Type: Diesel Glow Plug Wiring Harness
- OEM Connector: 284818-1
- Service Connector: Service by Cable Assembly - See Part Catalog
- Description: 1-Way F 4.0 Series(BK)

Terminal Part Information

Terminal Type ID	Terminated Lead	Diagnostic Test Probe	Terminal Removal Tool
I	Not required	No Tool Required	No Tool Required

E12E Glow Plug 5 (LZ0)

Pin	Size	Color	Circuit	Function	Terminal Type ID	Option
(1) 1	(1) 2.5	(1) GY / WH	(1) 1585	(1) Glow Plug 5 Control	(1) I	(1) —

E12F Glow Plug 6 (LZ0)

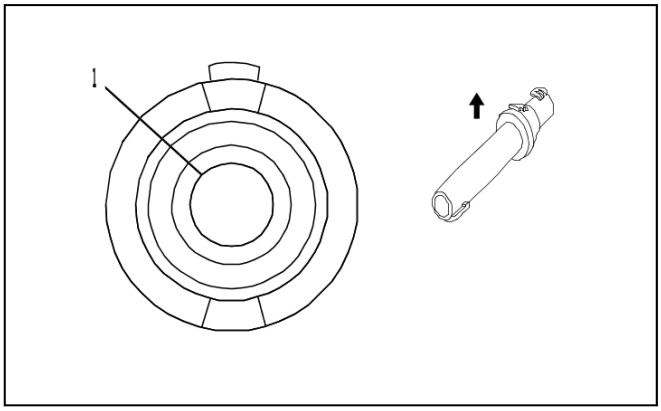

2231591

Connector Part Information

- Harness Type: Diesel Glow Plug Wiring Harness
- OEM Connector: 284818-1
- Service Connector: Service by Cable Assembly - See Part Catalog
- Description: 1-Way F 4.0 Series(BK)

Terminal Part Information

Terminal Type ID	Terminated Lead	Diagnostic Test Probe	Terminal Removal Tool
I	Not required	No Tool Required	No Tool Required

E12F Glow Plug 6 (LZ0)

Pin	Size	Color	Circuit	Function	Terminal Type ID	Option
(1) 1	(1) 2.5	(1) GY	(1) 1586	(1) Glow Plug 6 Control	(1) I	(1) —

E13LA Front Headlamp - Left (- (5W4 / 9C1))

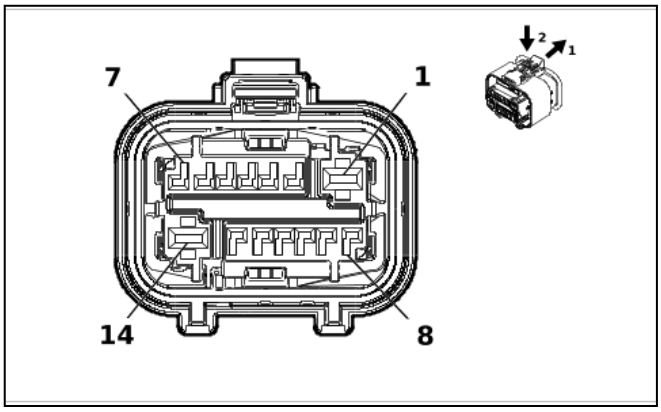

6408287

Connector Part Information

- Harness Type: Body Wiring Harness
- OEM Connector: 13546226
- Service Connector: 85086087
- Description: 14-Way F 1.2 MCON, 2.8 MCP Series, Sealed(BK)

Terminal Part Information

Terminal Type ID	Terminated Lead	Diagnostic Test Probe	Terminal Removal Tool
I	Not required	J-35616-12 (BU)	No Tool Required
II	Not required	J-35616-35 (VT)	No Tool Required

E13LA Front Headlamp - Left (- (5W4 / 9C1))

Pin	Size	Color	Circuit	Function	Terminal Type ID	Option
(1) 1	(1) 1	(1) BK	(1) 150	(1) Ground	(1) II	(1) —
(2) 2	(2) 0.5	(2) YE	(2) 712	(2) Left Headlamp Low Beam Control	(2) I	(2) —
(3) 3	(3) 0.35	(3) WH	(3) 711	(3) Left Headlamp High Beam Control	(3) I	(3) —
(4) 4	(4) 0.35	(4) GY / BU	(4) 7538	(4) Left Front DRL Control	(4) I	(4) —
(5) 5	(5) 0.35	(5) BU / WH	(5) 1314	(5) Left Front Turn Signal Lamp Control	(5) I	(5) —
(6) 6	(6) 0.35	(6) VT / BK	(6) 6568	(6) Front Turn Signal Lamp Feedback Signal	(6) I	(6) —
7 - 8	—	—	—	Not Occupied	—	—
(9) 9	(9) 0.5	(9) YE / GN	(9) 2024	(9) Animation Lighting Control	(9) I	(9) —
(10) 10	(10) 0.5	(10) GY / BN	(10) 10749	(10) Sequential Turn Lamp Enable Signal	(10) I	(10) —
11 - 13	—	—	—	Not Occupied	—	—
(14) 14	(14) 1.5	(14) RD / WH	(14) 640	(14) Battery Positive Voltage	(14) II	(14) —

E13LA Front Headlamp - Left (5W4 / 9C1)

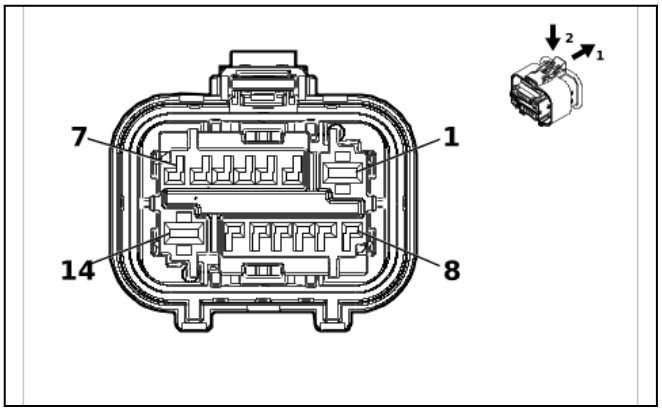

6650652

Connector Part Information

- Harness Type: Body Wiring Harness
- OEM Connector: 10535367
- Service Connector: 85086087
- Description: 14-Way F 1.2 MCON, 2.8 MCP Series(BK)

Terminal Part Information

Terminal Type ID	Terminated Lead	Diagnostic Test Probe	Terminal Removal Tool
I	Not required	J-35616-12 (BU)	No Tool Required
II	Not required	J-35616-35 (VT)	No Tool Required

E13LA Front Headlamp - Left (5W4 / 9C1)

Pin	Size	Color	Circuit	Function	Terminal Type ID	Option
(1) 1	(1) 1	(1) BK	(1) 150	(1) Ground	(1) II	(1) —
(2) 2	(2) 0.5	(2) YE	(2) 712	(2) Left Headlamp Low Beam Control	(2) I	(2) —
(3) 3	(3) 0.35	(3) WH	(3) 711	(3) Left Headlamp High Beam Control	(3) I	(3) —
(4) 4	(4) 0.35	(4) GY / BU	(4) 7538	(4) Left Front DRL Control	(4) I	(4) —
(5) 5	(5) 0.35	(5) BU / WH	(5) 1314	(5) Left Front Turn Signal Lamp Control	(5) I	(5) —
(6) 6	(6) 0.35	(6) VT / BK	(6) 6568	(6) Front Turn Signal Lamp Feedback Signal	(6) I	(6) —
(10) 10	(10) 0.5	(10) GY / BN	(10) 10749	(10) Sequential Turn Lamp Enable Signal	(10) I	(10) —
(14) 14	(14) 1.5	(14) RD / WH	(14) 640	(14) Battery Positive Voltage	(14) II	(14) —

E13RA Front Headlamp - Right (- (5W4 / 9C1))

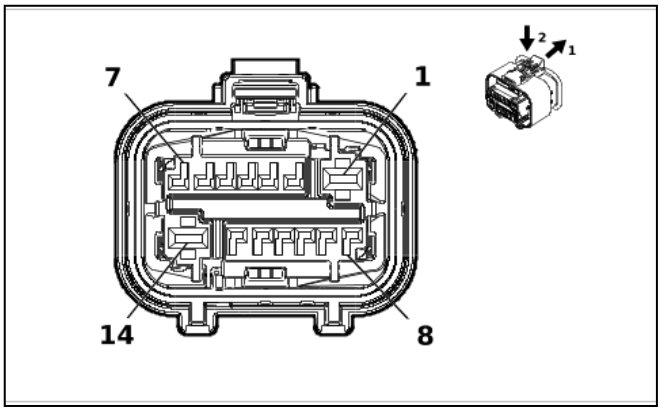

6408287

Connector Part Information

- Harness Type: Body Wiring Harness
- OEM Connector: 13546226
- Service Connector: 85086087
- Description: 14-Way F 1.2 MCON, 2.8 MCP Series, Sealed(BK)

Terminal Part Information

Terminal Type ID	Terminated Lead	Diagnostic Test Probe	Terminal Removal Tool
I	Not required	J-35616-12 (BU)	No Tool Required
II	Not required	J-35616-35 (VT)	No Tool Required

E13RA Front Headlamp - Right (- (5W4 / 9C1))

Pin	Size	Color	Circuit	Function	Terminal Type ID	Option
(1) 1	(1) 1	(1) BK	(1) 250	(1) Ground	(1) II	(1) —
(2) 2	(2) 0.5	(2) YE	(2) 312	(2) Right Headlamp Low Beam Control	(2) I	(2) —
(3) 3	(3) 0.35	(3) WH	(3) 311	(3) Right Headlamp High Beam Control	(3) I	(3) —
(4) 4	(4) 0.35	(4) BU / BN	(4) 7539	(4) Right Front DRL Control	(4) I	(4) —
(5) 5	(5) 0.35	(5) GN / VT	(5) 1315	(5) Right Front Turn Signal Lamp Control	(5) I	(5) —
(6) 6	(6) 0.35	(6) WH / YE	(6) 7545	(6) Right Front Turn Signal Lamp Feedback Signal	(6) I	(6) —
7 - 8	—	—	—	Not Occupied	—	—
(9) 9	(9) 0.5	(9) YE / GN	(9) 2024	(9) Animation Lighting Control	(9) I	(9) —
(10) 10	(10) 0.5	(10) GY / BN	(10) 10749	(10) Sequential Turn Lamp Enable Signal	(10) I	(10) —
11 - 13	—	—	—	Not Occupied	—	—
(14) 14	(14) 1.5	(14) RD / YE	(14) 740	(14) Battery Positive Voltage	(14) II	(14) —

E13RA Front Headlamp - Right (5W4 / 9C1)

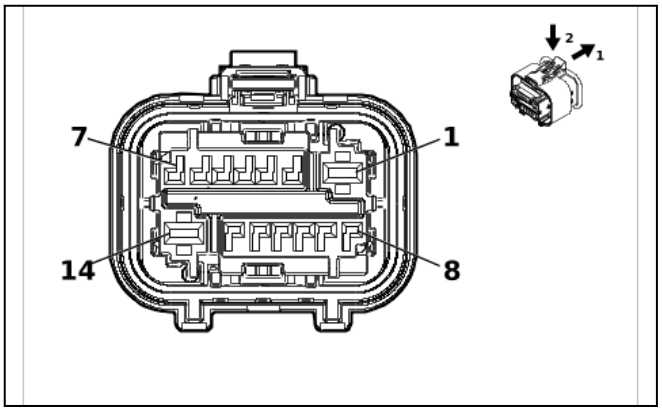

6650652

Connector Part Information

- Harness Type: Body Wiring Harness
- OEM Connector: 10535367
- Service Connector: 85086087
- Description: 14-Way F 1.2 MCON, 2.8 MCP Series(BK)

Terminal Part Information

Terminal Type ID	Terminated Lead	Diagnostic Test Probe	Terminal Removal Tool
I	Not required	J-35616-12 (BU)	No Tool Required
II	Not required	J-35616-35 (VT)	No Tool Required

E13RA Front Headlamp - Right (5W4 / 9C1)

Pin	Size	Color	Circuit	Function	Terminal Type ID	Option
(1) 1	(1) 1	(1) BK	(1) 250	(1) Ground	(1) II	(1) —
(2) 2	(2) 0.5	(2) YE	(2) 312	(2) Right Headlamp Low Beam Control	(2) I	(2) —
(3) 3	(3) 0.35	(3) WH	(3) 311	(3) Right Headlamp High Beam Control	(3) I	(3) —
(4) 4	(4) 0.35	(4) BU / BN	(4) 7539	(4) Right Front DRL Control	(4) I	(4) —
(5) 5	(5) 0.35	(5) GN / VT	(5) 1315	(5) Right Front Turn Signal Lamp Control	(5) I	(5) —
(6) 6	(6) 0.35	(6) WH / YE	(6) 7545	(6) Right Front Turn Signal Lamp Feedback Signal	(6) I	(6) —
(10) 10	(10) 0.5	(10) GY / BN	(10) 10749	(10) Sequential Turn Lamp Enable Signal	(10) I	(10) —
(14) 14	(14) 1.5	(14) RD / YE	(14) 740	(14) Battery Positive Voltage	(14) II	(14) —

E14A Front Seat Back Heater - Driver (KA1)

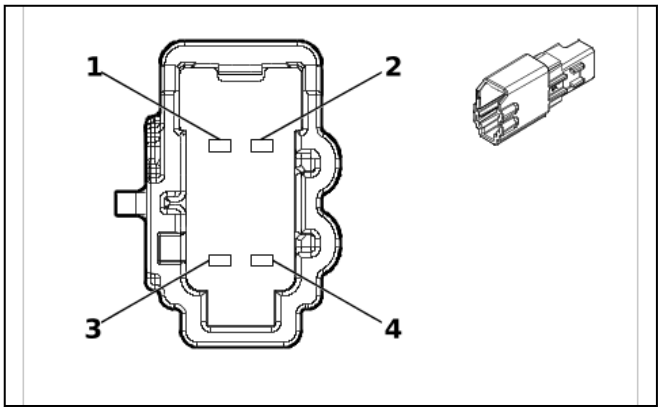

5423974

Connector Part Information

- Harness Type: Front Seat Wiring Harness - Driver
- OEM Connector: 13530133
- Service Connector: Service by Harness - See Part Catalog
- Description: 4-Way M 1.2 MCON Series(GY)

Terminal Part Information

Terminal Type ID	Terminated Lead	Diagnostic Test Probe	Terminal Removal Tool
I	Not required	No Tool Required	No Tool Required

E14A Front Seat Back Heater - Driver (KA1)

Pin	Size	Color	Circuit	Function	Terminal Type ID	Option
(1) 1	(1) —	(1) BN	(1) 2432	(1) Driver Seat Back Heating Element Control	(1) I	(1) —
(2) 2	(2) —	(2) BU	(2) 2425	(2) Driver Seat Back Heating Temperature Sensor Signal	(2) I	(2) —
(3) 3	(3) —	(3) BK / YE	(3) 2080	(3) Driver Heated Seat Thermistor Low Reference	(3) I	(3) —
(4) 4	(4) —	(4) BN / BK	(4) 2078	(4) Driver Seat Heating Element Low Reference	(4) I	(4) —

E14B Front Seat Cushion Heater - Driver (KA1)

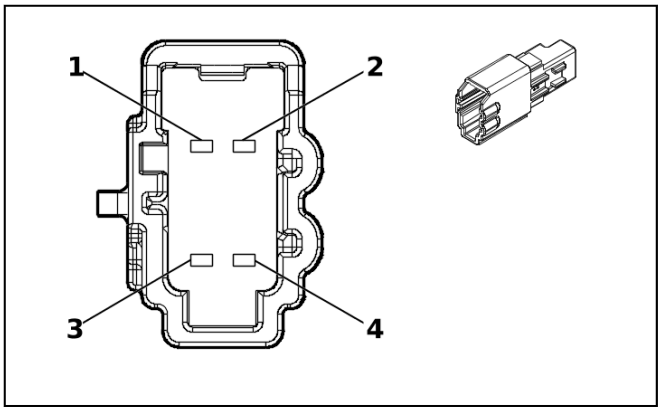

5360963

Connector Part Information

- Harness Type: Front Seat Wiring Harness - Driver
- OEM Connector: 13530132
- Service Connector: Service by Harness - See Part Catalog
- Description: 4-Way M 1.2 MCON Series(BK)

Terminal Part Information

Terminal Type ID	Terminated Lead	Diagnostic Test Probe	Terminal Removal Tool
I	Not required	No Tool Required	No Tool Required

E14B Front Seat Cushion Heater - Driver (KA1)

Pin	Size	Color	Circuit	Function	Terminal Type ID	Option
(1) 1	(1) —	(1) BN / VT	(1) 2077	(1) Driver Seat Heating Element Control	(1) I	(1) —
(2) 2	(2) —	(2) YE / GY	(2) 2079	(2) Driver Seat Heating Temperature Sensor Signal	(2) I	(2) —
(3) 3	(3) —	(3) BK / YE	(3) 2080	(3) Driver Heated Seat Thermistor Low Reference	(3) I	(3) —
(4) 4	(4) —	(4) BN / BK	(4) 2078	(4) Driver Seat Heating Element Low Reference	(4) I	(4) —

E14C Front Seat Back Heater - Passenger (KA1)

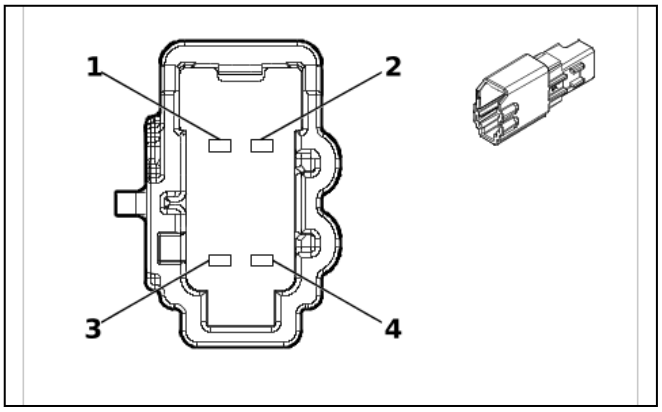

5423974

Connector Part Information

- Harness Type: Front Seat Wiring Harness - Passenger
- OEM Connector: 13530133
- Service Connector: Service by Harness - See Part Catalog
- Description: 4-Way M 1.2 MCON Series(GY)

Terminal Part Information

Terminal Type ID	Terminated Lead	Diagnostic Test Probe	Terminal Removal Tool
I	Not required	No Tool Required	No Tool Required

E14C Front Seat Back Heater - Passenger (KA1)

Pin	Size	Color	Circuit	Function	Terminal Type ID	Option
(1) 1	(1) —	(1) WH / BN	(1) 2481	(1) Passenger Seat Back Heating Element Control	(1) I	(1) —
(2) 2	(2) —	(2) WH / BU	(2) 2436	(2) Passenger Seat Back Heating Temperature Sensor Signal	(2) I	(2) —
(3) 3	(3) —	(3) BK / GN	(3) 2482	(3) Passenger Heated Back Thermistor Low Reference	(3) I	(3) —
(4) 4	(4) —	(4) GY / BK	(4) 2480	(4) Passenger Seat Heating Element Low Reference	(4) I	(4) —

E14D Front Seat Cushion Heater - Passenger (KA1)

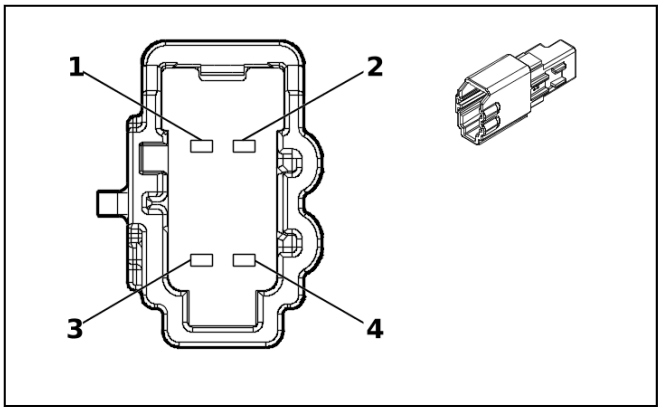

5360963

Connector Part Information

- Harness Type: Front Seat Wiring Harness - Passenger
- OEM Connector: 13530132
- Service Connector: Service by Harness - See Part Catalog
- Description: 4-Way M 1.2 MCON Series(BK)

Terminal Part Information

Terminal Type ID	Terminated Lead	Diagnostic Test Probe	Terminal Removal Tool
I	Not required	No Tool Required	No Tool Required

E14D Front Seat Cushion Heater - Passenger (KA1)

Pin	Size	Color	Circuit	Function	Terminal Type ID	Option
(1) 1	(1) —	(1) BN / BU	(1) 2479	(1) Passenger Seat Heating Element Control	(1) I	(1) —
(2) 2	(2) —	(2) WH / GY	(2) 2434	(2) Passenger Seat Heating Temperature Sensor Signal	(2) I	(2) —
(3) 3	(3) —	(3) BK / GY	(3) 2435	(3) Passenger Heated Seat Thermistor Low Reference	(3) I	(3) —
(4) 4	(4) —	(4) GY / BK	(4) 2480	(4) Passenger Seat Heating Element Low Reference	(4) I	(4) —

E14F Rear Seat Cushion Heater - Left Rear (KA6)

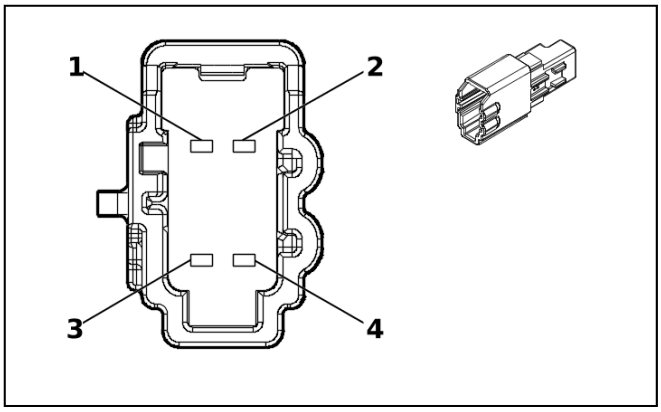

5360963

Connector Part Information

- Harness Type: 2nd Row Seat Wiring Harness - Left Cushion
- OEM Connector: 13530132
- Service Connector: Service by Harness - See Part Catalog
- Description: 4-Way M 1.2 MCON Series(BK)

Terminal Part Information

Terminal Type ID	Terminated Lead	Diagnostic Test Probe	Terminal Removal Tool
I	Not required	No Tool Required	No Tool Required

E14F Rear Seat Cushion Heater - Left Rear (KA6)

Pin	Size	Color	Circuit	Function	Terminal Type ID	Option
(1) 1	(1) —	(1) GY	(1) 2294	(1) Left Rear Seat Cushion Heating Element Control	(1) I	(1) —
(2) 2	(2) —	(2) WH / BU	(2) 7047	(2) Left Rear Seat Cushion Temperature Sensor Signal	(2) I	(2) —
(3) 3	(3) —	(3) BU / WH	(3) 7048	(3) Left Rear Cushion Thermistor Feedback Signal	(3) I	(3) —
(4) 4	(4) —	(4) BU / BK	(4) 2446	(4) Left Rear Seat Heating Element Low Reference	(4) I	(4) —

E14H Rear Seat Cushion Heater - Right Rear (KA6)

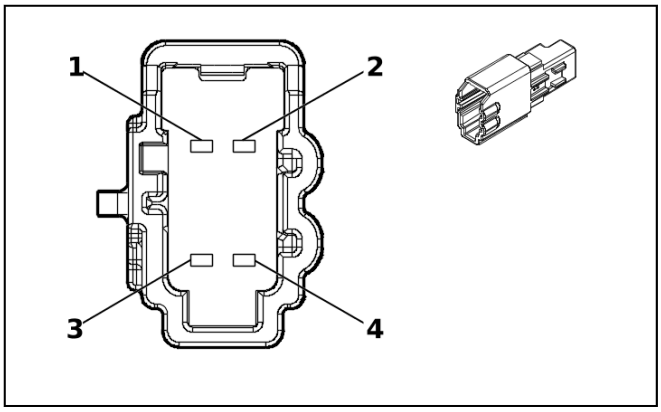

5360963

Connector Part Information

- Harness Type: 2nd Row Seat Wiring Harness - Right Cushion
- OEM Connector: 13530132
- Service Connector: Service by Harness - See Part Catalog
- Description: 4-Way M 1.2 MCON Series(BK)

Terminal Part Information

Terminal Type ID	Terminated Lead	Diagnostic Test Probe	Terminal Removal Tool
I	Not required	No Tool Required	No Tool Required

E14H Rear Seat Cushion Heater - Right Rear (KA6)

Pin	Size	Color	Circuit	Function	Terminal Type ID	Option
(1) 1	(1) —	(1) GN / BN	(1) 2296	(1) Right Rear Seat Cushion Heating Element Control	(1) I	(1) —
(2) 2	(2) —	(2) YE / WH	(2) 7053	(2) Right Rear Seat Cushion Temperature Sensor Signal	(2) I	(2) —
(3) 3	(3) —	(3) WH / BK	(3) 7054	(3) Right Rear Cushion Thermistor Feedback Signal	(3) I	(3) —
(4) 4	(4) —	(4) GN / BK	(4) 2457	(4) Right Rear Seat Heating Element Low Reference	(4) I	(4) —

E18 Rear Window Defogger Grid X1

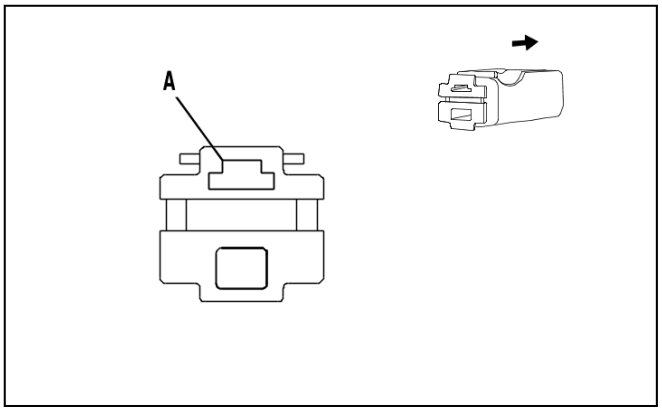

4248834

Connector Part Information
- Harness Type: Liftgate Wiring Harness
- OEM Connector: 7123-5014-30
- Service Connector: Service by Harness - See Part Catalog
- Description: 1-Way F 250 Series(BK)

Terminal Part Information

Terminal Type ID	Terminated Lead	Diagnostic Test Probe	Terminal Removal Tool
I	Not required	J-35616-42 (RD)	No Tool Required

E18 Rear Window Defogger Grid X1

Pin	Size	Color	Circuit	Function	Terminal Type ID	Option
A	2.5	BN / VT	293	Rear Defogger Grid Control	I	—

E18 Rear Window Defogger Grid X2

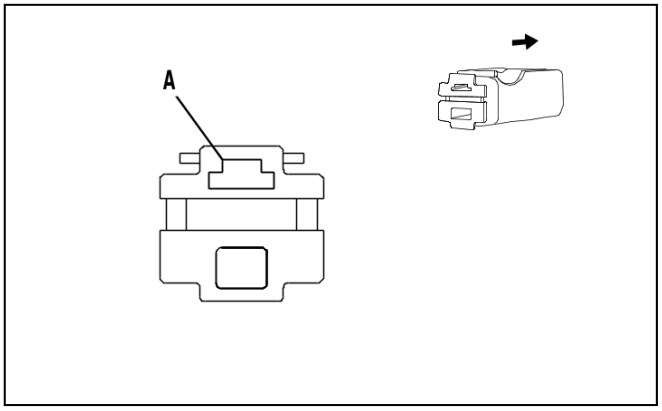

4248834

Connector Part Information
- Harness Type: Liftgate Wiring Harness
- OEM Connector: 7123-5014-30
- Service Connector: Service by Harness - See Part Catalog
- Description: 1-Way F 250 Series(BK)

Terminal Part Information

Terminal Type ID	Terminated Lead	Diagnostic Test Probe	Terminal Removal Tool
I	Not required	J-35616-42 (RD)	No Tool Required

E18 Rear Window Defogger Grid X2

Pin	Size	Color	Circuit	Function	Terminal Type ID	Option
A	2.5	BK	2050	Ground	I	—

E28 Front Floor Console Compartment Lamp (D07 / DCH)

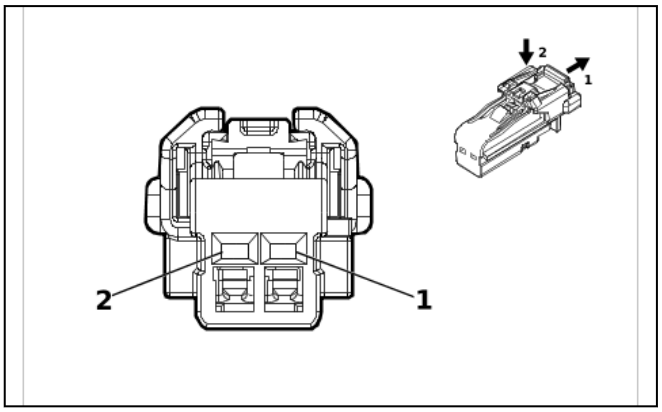

4115691

Connector Part Information

- Harness Type: Front Floor Console Wiring Harness
- OEM Connector: 6098-8988
- Service Connector: Service by Harness - See Part Catalog
- Description: 2-Way F 1.2 MCON Series(BK)

Terminal Part Information

Terminal Type ID	Terminated Lead	Diagnostic Test Probe	Terminal Removal Tool
I	Not required	J-35616-16 (L-GN)	No Tool Required

E28 Front Floor Console Compartment Lamp (D07 / DCH)

Pin	Size	Color	Circuit	Function	Terminal Type ID	Option
(1) 1	(1) 0.75	(1) BK	(1) 1250	(1) Ground	(1) I	(1) —
(2) 2	(2) 0.75	(2) GN / VT	(2) 4786	(2) Dome/Reading Lamp Enable Signal	(2) I	(2) —

E29LF Front Fog Lamp - Left (T40)

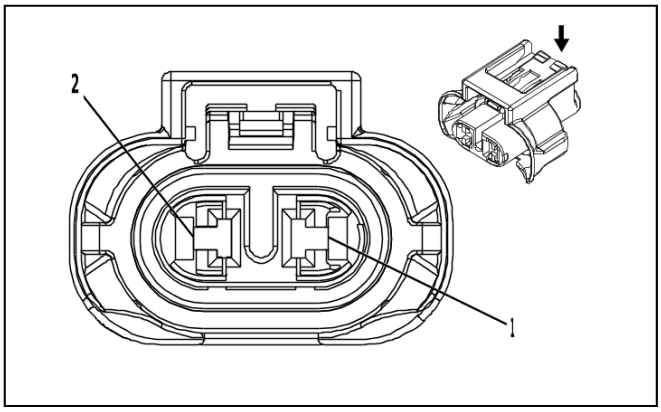

3404058

Connector Part Information
- Harness Type: Front Object Alarm Sensor Wiring Harness
- OEM Connector: 13818129
- Service Connector: Service by Harness - See Part Catalog
- Description: 2-Way F 2.8 APEX Series, Sealed(BK)

Terminal Part Information

Terminal Type ID	Terminated Lead	Diagnostic Test Probe	Terminal Removal Tool
I	Not required	J-35616-35 (VT)	No Tool Required

E29LF Front Fog Lamp - Left (T40)

Pin	Size	Color	Circuit	Function	Terminal Type ID	Option
(1) 1	(1) 1.5	(1) BN / GY	(1) 5061	(1) Left Front Fog Lamp Control	(1) I	(1) —
(2) 2	(2) 1.5	(2) BK	(2) 150	(2) Ground	(2) I	(2) —

E29RF Front Fog Lamp - Right (T40)

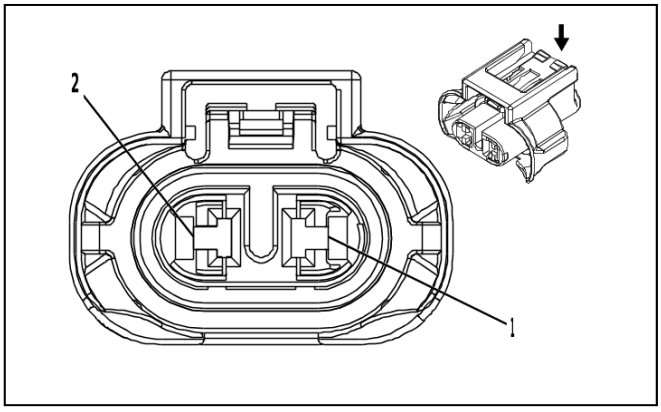

3404058

Connector Part Information
- Harness Type: Front Object Alarm Sensor Wiring Harness
- OEM Connector: 13818129
- Service Connector: Service by Harness - See Part Catalog
- Description: 2-Way F 2.8 APEX Series, Sealed(BK)

Terminal Part Information

Terminal Type ID	Terminated Lead	Diagnostic Test Probe	Terminal Removal Tool
I	Not required	J-35616-35 (VT)	No Tool Required

E29RF Front Fog Lamp - Right (T40)

Pin	Size	Color	Circuit	Function	Terminal Type ID	Option
(1) 1	(1) 1.5	(1) BN / GY	(1) 5061	(1) Left Front Fog Lamp Control	(1) I	(1) —
(2) 2	(2) 1.5	(2) BK	(2) 250	(2) Ground	(2) I	(2) —

E31L Sunshade Mirror Lamp - Left

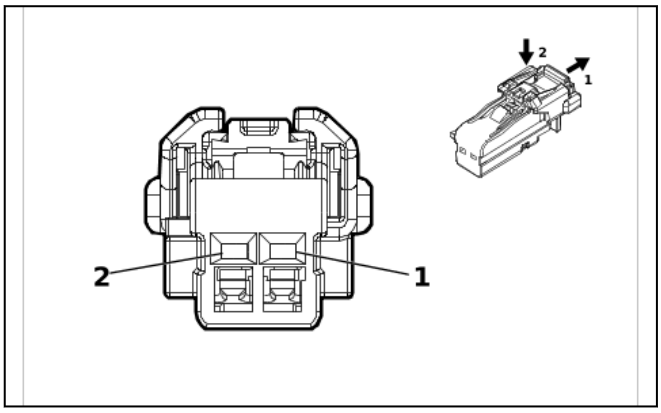

5377746

Connector Part Information

- Harness Type: Headlining Trim Panel Harness
- OEM Connector: 6098-8990
- Service Connector: 84867147
- Description: 2-Way F 1.2 MCON Series(BN)

Terminal Part Information

Terminal Type ID	Terminated Lead	Diagnostic Test Probe	Terminal Removal Tool
I	Not required	J-35616-16 (L-GN)	No Tool Required

E31L Sunshade Mirror Lamp - Left

Pin	Size	Color	Circuit	Function	Terminal Type ID	Option
(1) 1	(1) 0.5	(1) BU / GN	(1) 4785	(1) Interior Lamp Overhead Enable Signal	(1) I	(1) —
(2) 2	(2) 0.5	(2) BK	(2) 1850	(2) Ground	(2) I	(2) —

E31R Sunshade Mirror Lamp - Right

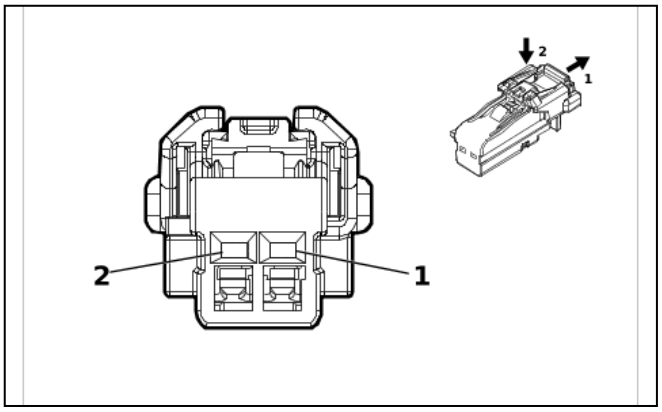

5377746

Connector Part Information
- Harness Type: Headlining Trim Panel Harness
- OEM Connector: 6098-8990
- Service Connector: 84867147
- Description: 2-Way F 1.2 MCON Series(BN)

Terminal Part Information

Terminal Type ID	Terminated Lead	Diagnostic Test Probe	Terminal Removal Tool
I	Not required	J-35616-16 (L-GN)	No Tool Required

E31R Sunshade Mirror Lamp - Right

Pin	Size	Color	Circuit	Function	Terminal Type ID	Option
(1) 1	(1) 0.5	(1) GY / WH	(1) 2369	(1) Interior Lamp Overhead 2 Enable Signal	(1) I	(1) —
(2) 2	(2) 0.5	(2) BK	(2) 1850	(2) Ground	(2) I	(2) —

E35L Spot Lamp - Left (5W4 / 9C1)

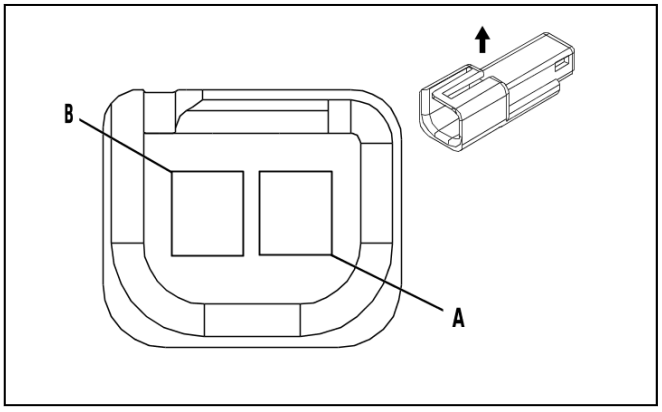

35441

Connector Part Information
- Harness Type: Instrument Panel Wiring Harness
- OEM Connector: 13649649
- Service Connector: 85675536
- Description: 2-Way M 150 Metri-Pack Series(BK)

Terminal Part Information

Terminal Type ID	Terminated Lead	Diagnostic Test Probe	Terminal Removal Tool
I	Not required	J-35616-3 (GY)	No Tool Required

E35L Spot Lamp - Left (5W4 / 9C1)

Pin	Size	Color	Circuit	Function	Terminal Type ID	Option
A	0.75	RD / GN	10240	Battery Positive Voltage Police	I	—
B	0.5	BK	1850	Ground	I	—

E35R Spot Lamp - Right (5W4 / 9C1)

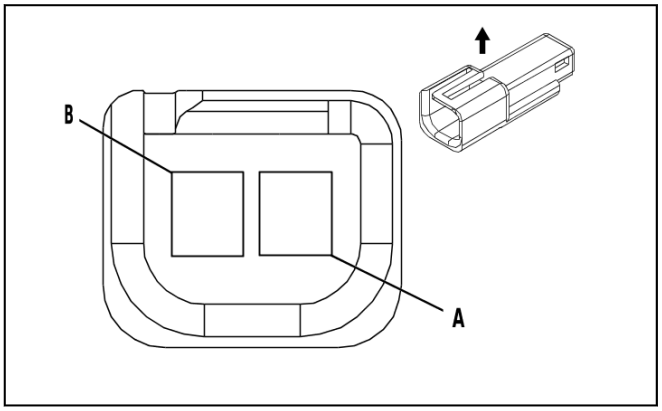

35441

Connector Part Information

- Harness Type: Instrument Panel Wiring Harness
- OEM Connector: 13649649
- Service Connector: 85675536
- Description: 2-Way M 150 Metri-Pack Series(BK)

Terminal Part Information

Terminal Type ID	Terminated Lead	Diagnostic Test Probe	Terminal Removal Tool
I	Not required	J-35616-3 (GY)	No Tool Required

E35R Spot Lamp - Right (5W4 / 9C1)

Pin	Size	Color	Circuit	Function	Terminal Type ID	Option
A	0.75	RD / GY	10340	Battery Positive Voltage Police	I	—
B	0.35	BK	1050	Ground	I	—

E37H Roof Rail Rear Seat Position Reading and Courtesy Lamp - Left (C3U)

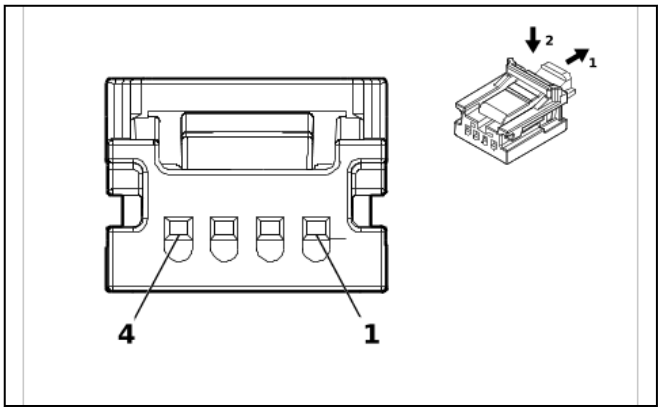

5493278

Connector Part Information

- Harness Type: Headlining Trim Panel Harness
- OEM Connector: 34791-5140
- Service Connector: 19354840
- Description: 4-Way F Mini 50 Series(BK)

Terminal Part Information

Terminal Type ID	Terminated Lead	Diagnostic Test Probe	Terminal Removal Tool
I	Not required	EL-35616-58 (BK)	No Tool Required

E37H Roof Rail Rear Seat Position Reading and Courtesy Lamp - Left (C3U)

Pin	Size	Color	Circuit	Function	Terminal Type ID	Option
(1) 1	(1) 0.35	(1) GN / YE	(1) 2903	(1) Row 2 Dome Reading Lamp Interior Lamp Control	(1) I	(1) —
2	—	—	—	Not Occupied	—	—
(3) 3	(3) 0.35	(3) BK	(3) 1850	(3) Ground	(3) I	(3) —
(4) 4	(4) 0.35	(4) WH / BN	(4) 2904	(4) Row 2 Dome Reading Lamp Switch Signal	(4) I	(4) —

E37J Roof Rail Rear Seat Position Reading and Courtesy Lamp - Right (C3U)

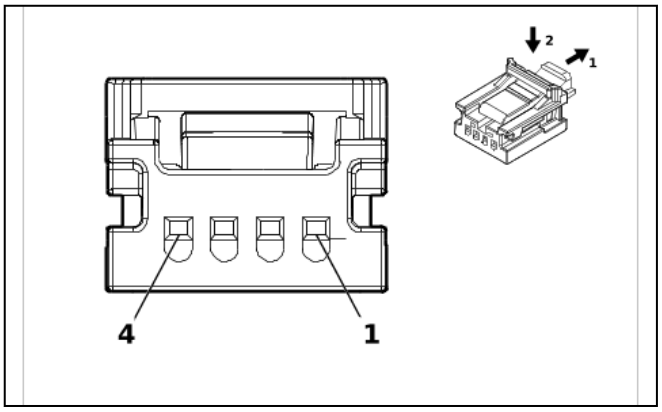

5493278

Connector Part Information

- Harness Type: Headlining Trim Panel Harness
- OEM Connector: 34791-5140
- Service Connector: 19354840
- Description: 4-Way F Mini 50 Series(BK)

Terminal Part Information

Terminal Type ID	Terminated Lead	Diagnostic Test Probe	Terminal Removal Tool
I	Not required	EL-35616-58 (BK)	No Tool Required

E37J Roof Rail Rear Seat Position Reading and Courtesy Lamp - Right (C3U)

Pin	Size	Color	Circuit	Function	Terminal Type ID	Option
(1) 1	(1) 0.35	(1) BN / BU	(1) 2905	(1) Row 2 Dome Reading Lamp 2 Interior Lamp Control	(1) I	(1) —
2	—	—	—	Not Occupied	—	—
(3) 3	(3) 0.35	(3) BK	(3) 1850	(3) Ground	(3) I	(3) —
(4) 4	(4) 0.35	(4) VT / GY	(4) 2906	(4) Row 2 Dome Reading Lamp 2 Switch Signal	(4) I	(4) —

E37SMA Rear Seat Position Center Reading and Courtesy Lamp - 2nd Row (- C3U)

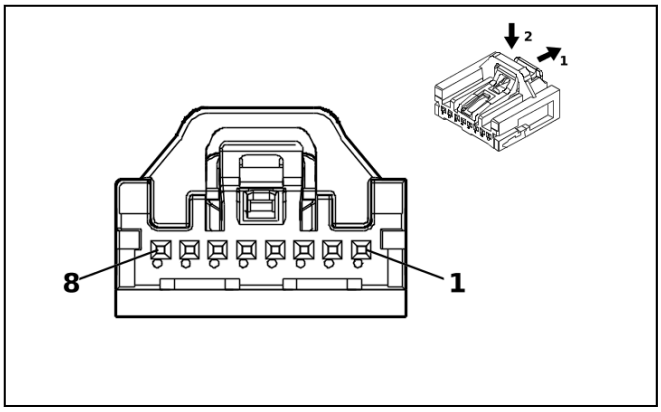

5200269

Connector Part Information

- Harness Type: Headlining Trim Panel Harness
- OEM Connector: 35068228
- Service Connector: 84769201
- Description: 8-Way F Mini 50 Series(BK)

Terminal Part Information

Terminal Type ID	Terminated Lead	Diagnostic Test Probe	Terminal Removal Tool
I	Not required	EL-35616-58 (BK)	No Tool Required

E37SMA Rear Seat Position Center Reading and Courtesy Lamp - 2nd Row (- C3U)

Pin	Size	Color	Circuit	Function	Terminal Type ID	Option
(1) 1	(1) 0.35	(1) GN / YE	(1) 2903	(1) Row 2 Dome Reading Lamp Interior Lamp Control	(1) I	(1) —
(2) 2	(2) 0.35	(2) BN / BU	(2) 2905	(2) Row 2 Dome Reading Lamp 2 Interior Lamp Control	(2) I	(2) —
(3) 3	(3) 0.35	(3) BK	(3) 1850	(3) Ground	(3) I	(3) —
(4) 4	(4) 0.35	(4) WH / BN	(4) 2904	(4) Row 2 Dome Reading Lamp Switch Signal	(4) I	(4) —
(5) 5	(5) 0.35	(5) VT / GY	(5) 2906	(5) Row 2 Dome Reading Lamp 2 Switch Signal	(5) I	(5) —
6 - 8	—	—	—	Not Occupied	—	—

E37SMB Rear Seat Position Center Reading and Courtesy Lamp - 3rd Row

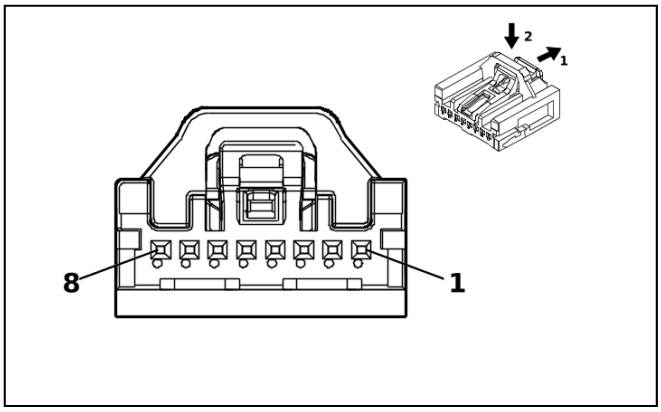

5200269

Connector Part Information
- Harness Type: Headlining Trim Panel Harness
- OEM Connector: 35068228
- Service Connector: 84769201
- Description: 8-Way F Mini 50 Series(BK)

Terminal Part Information

Terminal Type ID	Terminated Lead	Diagnostic Test Probe	Terminal Removal Tool
I	Not required	EL-35616-58 (BK)	No Tool Required

E37SMB Rear Seat Position Center Reading and Courtesy Lamp - 3rd Row

Pin	Size	Color	Circuit	Function	Terminal Type ID	Option
(1) 1	(1) 0.35	(1) BU / WH	(1) 2907	(1) Row 3 Dome Reading Lamp Interior Lamp Control	(1) I	(1) —
(2) 2	(2) 0.35	(2) BN / VT	(2) 2909	(2) Row 3 Dome Reading Lamp 2 Interior Lamp Control	(2) I	(2) —
(3) 3	(3) 0.35	(3) BK	(3) 1850	(3) Ground	(3) I	(3) —
(4) 4	(4) 0.35	(4) VT / YE	(4) 2908	(4) Row 3 Dome Reading Lamp Switch Signal	(4) I	(4) —
(5) 5	(5) 0.35	(5) YE / GY	(5) 2910	(5) Row 3 Dome Reading Lamp 2 Switch Signal	(5) I	(5) —
6 - 8	—	—	—	Not Occupied	—	—

E40 Air Heater X1 (C3A)

—

Connector Part Information
- Harness Type: AUXHEATER
- OEM Connector: Not Available
- Service Connector: Service by Harness - See Part Catalog
- Description: 1-Way

Terminal Part Information

Terminal Type ID	Terminated Lead	Diagnostic Test Probe	Terminal Removal Tool
I	Not required	No Tool Required	No Tool Required

E40 Air Heater X1 (C3A)

Pin	Size	Color	Circuit	Function	Terminal Type ID	Option
(2) 2	(2) —	(2) RD / GY	(2) 642	(2) Battery Positive Voltage	(2) I	(2) —

E40 Air Heater X2 (C3A)

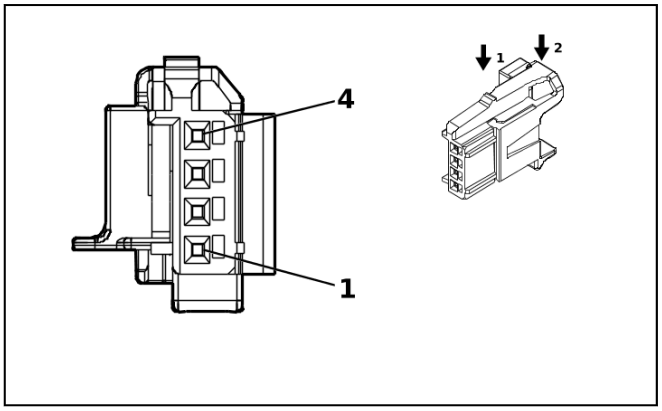

5191926

Connector Part Information

- Harness Type: Heater Wiring Harness
- OEM Connector: 2294399-1
- Service Connector: Service by Harness - See Part Catalog
- Description: 4-Way F 0.64 Micro-Quadlock Series(BK)

Terminal Part Information

Terminal Type ID	Terminated Lead	Diagnostic Test Probe	Terminal Removal Tool
I	Not required	J-35616-64B (L-BU)	No Tool Required

E40 Air Heater X2 (C3A)

Pin	Size	Color	Circuit	Function	Terminal Type ID	Option
1	—	—	—	Not Occupied	—	—
(2) 2	(2) 0.35	(2) BN / VT	(2) 239	(2) Run/Crank Ignition 1 Voltage	(2) I	(2) —
(3) 3	(3) 0.35	(3) BU	(3) 2852	(3) Body Control Module LIN Bus 6	(3) I	(3) —
(4) 4	(4) 0.35	(4) BK	(4) 1050	(4) Ground	(4) I	(4) —

E42L Rear Body Structure Stop Lamp - Left

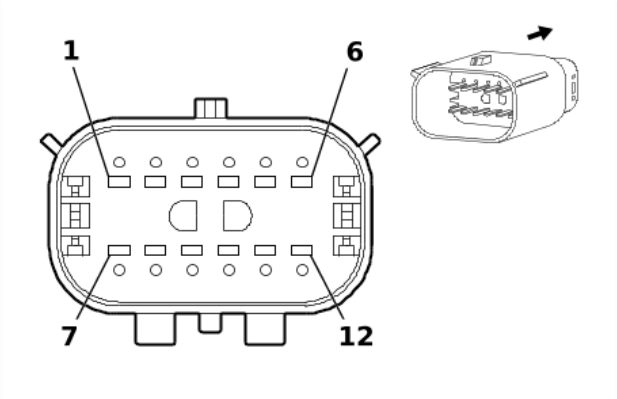

1825167

Connector Part Information

- Harness Type: Body Wiring Harness
- OEM Connector: 33482-6201
- Service Connector: 19369242
- Description: 12-Way M 1.5 MX Series, Sealed(BK)

Terminal Part Information

Terminal Type ID	Terminated Lead	Diagnostic Test Probe	Terminal Removal Tool
I	86800300	J-35616-3 (GY)	J-38125-217

E42L Rear Body Structure Stop Lamp - Left

Pin	Size	Color	Circuit	Function	Terminal Type ID	Option
(1) 1	(1) 1.5	(1) BK	(1) 2050	(1) Ground	(1) I	(1) —
(2) 2	(2) 0.75	(2) RD / GY	(2) 11240	(2) Battery Positive Voltage	(2) I	(2) —
(3) 3	(3) 0.35	(3) GY / YE	(3) 7542	(3) Left Rear Stop Lamp Control	(3) I	(3) —
(4) 4	(4) 0.5	(4) BN / BU	(4) 6993	(4) Left Rear Park Lamp Control	(4) I	(4) —
(5) 5	(5) 0.5	(5) BU / WH	(5) 1334	(5) Left Rear Turn Signal Lamp Control 2	(5) I	(5) —
(6) 6	(6) 0.35	(6) WH / VT	(6) 6567	(6) Rear Turn Signal Lamp Feedback Signal	(6) I	(6) —
(7) 7	(7) 0.5	(7) GN / WH	(7) 24	(7) Backup Lamp Control	(7) I	(7) —
(8) 8	(8) 0.5	(8) YE / GN	(8) 2024	(8) Animation Lighting Control	(8) I	(8) —
(9) 9	(9) 0.5	(9) GY / BN	(9) 10749	(9) Sequential Turn Lamp Enable Signal	(9) I	(9) —
10 - 12	—	—	—	Not Occupied	—	—

E42R Rear Body Structure Stop Lamp - Right

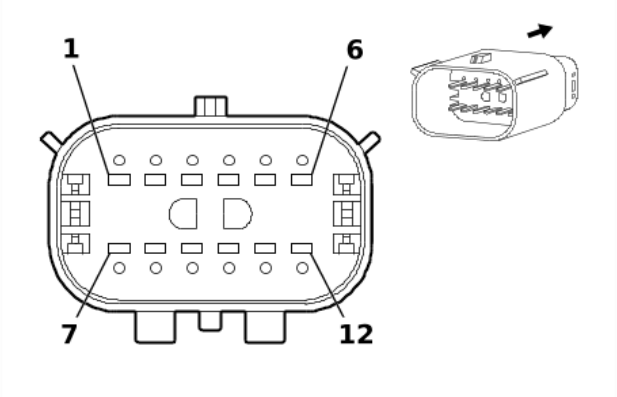

1825167

Connector Part Information

- Harness Type: Body Wiring Harness
- OEM Connector: 33482-6201
- Service Connector: 19369242
- Description: 12-Way M 1.5 MX Series, Sealed(BK)

Terminal Part Information

Terminal Type ID	Terminated Lead	Diagnostic Test Probe	Terminal Removal Tool
I	86800300	J-35616-3 (GY)	J-38125-217

E42R Rear Body Structure Stop Lamp - Right

Pin	Size	Color	Circuit	Function	Terminal Type ID	Option
(1) 1	(1) 0.75	(1) BK	(1) 1450	(1) Ground	(1) I	(1) —
(2) 2	(2) 0.75	(2) RD / BU	(2) 11340	(2) Battery Positive Voltage	(2) I	(2) —
(3) 3	(3) 0.35	(3) WH / YE	(3) 7541	(3) Right Rear Stop Lamp Control	(3) I	(3) —
(4) 4	(4) 0.5	(4) BN / GY	(4) 6995	(4) Right Rear Park Lamp Control	(4) I	(4) —
(5) 5	(5) 0.5	(5) BU / VT	(5) 1335	(5) Right Rear Turn Signal Lamp Control 2	(5) I	(5) —
(6) 6	(6) 0.35	(6) WH / BK	(6) 7544	(6) Right Rear Turn Signal Lamp Feedback Signal	(6) I	(6) —
(7) 7	(7) 0.5	(7) GN / WH	(7) 24	(7) Backup Lamp Control	(7) I	(7) —
(8) 8	(8) 0.5	(8) YE / GN	(8) 2024	(8) Animation Lighting Control	(8) I	(8) —
(9) 9	(9) 0.5	(9) GY / BN	(9) 10749	(9) Sequential Turn Lamp Enable Signal	(9) I	(9) —
10 - 12	—	—	—	Not Occupied	—	—

E52 Reductant Heater 2 - Injector Supply Pipe (LZ0)

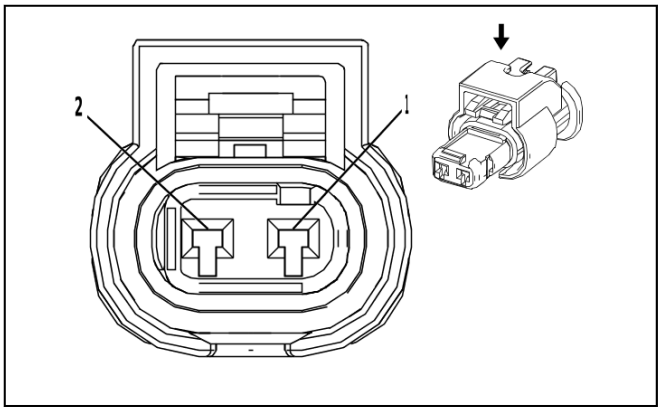

2474752

Connector Part Information
- Harness Type: Emission Reduction Fluid Tank Reservoir Wire Harness
- OEM Connector: 13927761
- Service Connector: Service by Harness - See Part Catalog
- Description: 2-Way F 1.2 MCON Series, Sealed(BK with BK Inner Connector)

Terminal Part Information

Terminal Type ID	Terminated Lead	Diagnostic Test Probe	Terminal Removal Tool
I	Not required	No Tool Required	No Tool Required

E52 Reductant Heater 2 - Injector Supply Pipe (LZ0)

Pin	Size	Color	Circuit	Function	Terminal Type ID	Option
(1) 1	(1) —	(1) WH	(1) 3199	(1) Diesel Exhaust Fluid Pressure Line Heater Control	(1) I	(1) —
(2) 2	(2) —	(2) BN	(2) 4319	(2) Diesel Exhaust Fluid Line Heater Low Control	(2) I	(2) —

E55LF Front Side Door Map Pocket Illumination Lamp - Left

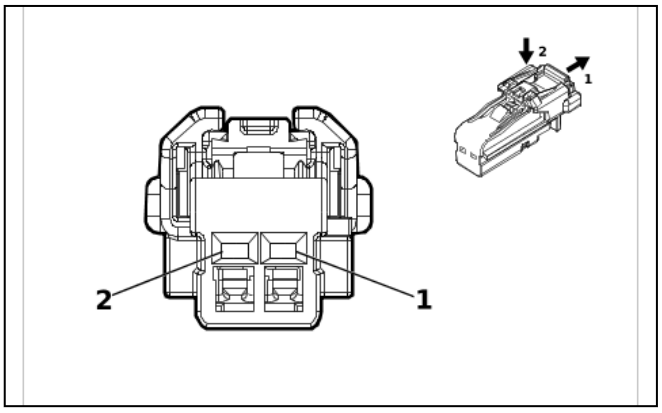

4115691

Connector Part Information
- Harness Type: Front Side Door Door Lock Door Wiring Harness - Driver
- OEM Connector: 6098-8988
- Service Connector: Service by Harness - See Part Catalog
- Description: 2-Way F 1.2 MCON Series(BK)

Terminal Part Information

Terminal Type ID	Terminated Lead	Diagnostic Test Probe	Terminal Removal Tool
I	Not required	J-35616-16 (L-GN)	No Tool Required

E55LF Front Side Door Map Pocket Illumination Lamp - Left

Pin	Size	Color	Circuit	Function	Terminal Type ID	Option
(1) 1	(1) 0.35	(1) GY / VT	(1) 2767	(1) LED Ambient Lighting Control Left Front Door	(1) I	(1) —
(2) 2	(2) 0.35	(2) BK	(2) 1150	(2) Ground	(2) I	(2) —

E55LR Rear Side Door Pocket Illumination Lamp - Left

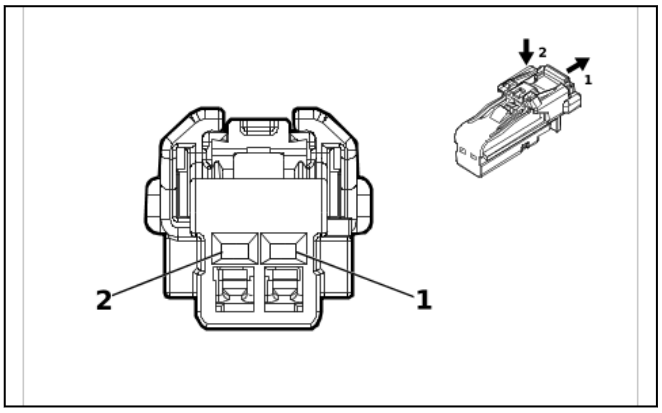

4115691

Connector Part Information

- Harness Type: Rear Side Door Door Lock Door Wiring Harness - Left
- OEM Connector: 6098-8988
- Service Connector: Service by Harness - See Part Catalog
- Description: 2-Way F 1.2 MCON Series(BK)

Terminal Part Information

Terminal Type ID	Terminated Lead	Diagnostic Test Probe	Terminal Removal Tool
I	Not required	J-35616-16 (L-GN)	No Tool Required

E55LR Rear Side Door Pocket Illumination Lamp - Left

Pin	Size	Color	Circuit	Function	Terminal Type ID	Option
(1) 1	(1) 0.35	(1) WH / YE	(1) 7557	(1) Interior Door Handle Accent Lighting Control	(1) I	(1) —
(2) 2	(2) 0.35	(2) BK	(2) 1150	(2) Ground	(2) I	(2) —

E55RF Front Side Door Map Pocket Illumination Lamp - Right

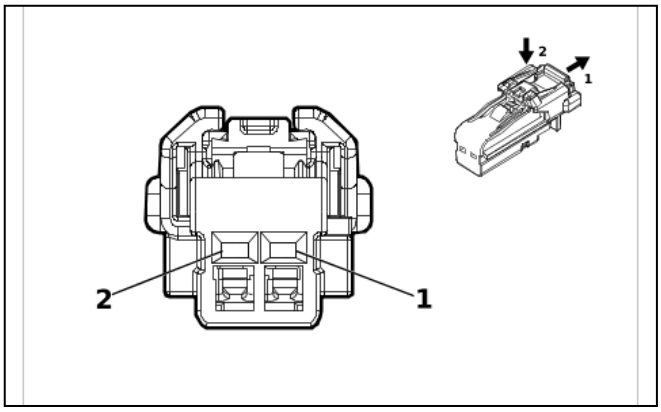

4115691

Connector Part Information
- Harness Type: Front Side Door Door Lock Door Wiring Harness - Passenger
- OEM Connector: 6098-8988
- Service Connector: Service by Harness - See Part Catalog
- Description: 2-Way F 1.2 MCON Series(BK)

Terminal Part Information

Terminal Type ID	Terminated Lead	Diagnostic Test Probe	Terminal Removal Tool
I	Not required	J-35616-16 (L-GN)	No Tool Required

E55RF Front Side Door Map Pocket Illumination Lamp - Right

Pin	Size	Color	Circuit	Function	Terminal Type ID	Option
(1) 1	(1) 0.35	(1) WH / BN	(1) 2768	(1) LED Ambient Lighting Control Right Front Door	(1) I	(1) —
(2) 2	(2) 0.35	(2) BK	(2) 1250	(2) Ground	(2) I	(2) —

E55RR Rear Side Door Pocket Illumination Lamp - Right

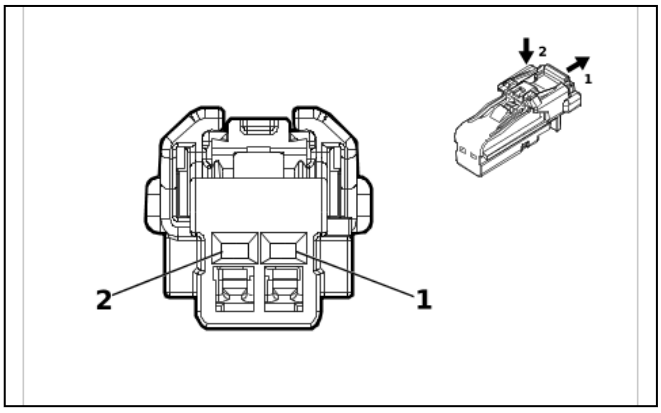

4115691

Connector Part Information
- Harness Type: Rear Side Door Door Lock Door Wiring Harness - Right
- OEM Connector: 6098-8988
- Service Connector: Service by Harness - See Part Catalog
- Description: 2-Way F 1.2 MCON Series(BK)

Terminal Part Information

Terminal Type ID	Terminated Lead	Diagnostic Test Probe	Terminal Removal Tool
I	Not required	J-35616-16 (L-GN)	No Tool Required

E55RR Rear Side Door Pocket Illumination Lamp - Right

Pin	Size	Color	Circuit	Function	Terminal Type ID	Option
(1) 1	(1) 0.35	(1) WH / YE	(1) 7557	(1) Interior Door Handle Accent Lighting Control	(1) I	(1) —
(2) 2	(2) 0.35	(2) BK	(2) 1250	(2) Ground	(2) I	(2) —

E63D Front Side Door Inside Handle Illumination Lamp - Left

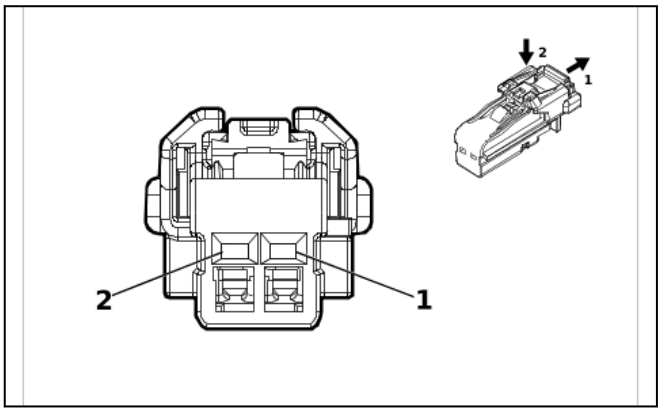

4115691

Connector Part Information

- Harness Type: Front Side Door Door Lock Door Wiring Harness - Driver
- OEM Connector: 6098-8988
- Service Connector: Service by Harness - See Part Catalog
- Description: 2-Way F 1.2 MCON Series(BK)

Terminal Part Information

Terminal Type ID	Terminated Lead	Diagnostic Test Probe	Terminal Removal Tool
I	Not required	J-35616-16 (L-GN)	No Tool Required

E63D Front Side Door Inside Handle Illumination Lamp - Left

Pin	Size	Color	Circuit	Function	Terminal Type ID	Option
(1) 1	(1) 0.35	(1) GY / VT	(1) 2767	(1) LED Ambient Lighting Control Left Front Door	(1) I	(1) —
(2) 2	(2) 0.35	(2) BK	(2) 1150	(2) Ground	(2) I	(2) —

E63LR Rear Side Door Inside Handle Illumination Lamp - Left

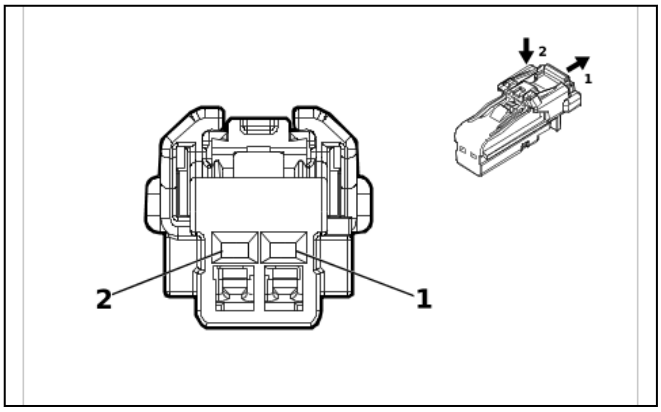

4115691

Connector Part Information
- Harness Type: Rear Side Door Door Lock Door Wiring Harness - Left
- OEM Connector: 6098-8988
- Service Connector: Service by Harness - See Part Catalog
- Description: 2-Way F 1.2 MCON Series(BK)

Terminal Part Information

Terminal Type ID	Terminated Lead	Diagnostic Test Probe	Terminal Removal Tool
I	Not required	J-35616-16 (L-GN)	No Tool Required

E63LR Rear Side Door Inside Handle Illumination Lamp - Left

Pin	Size	Color	Circuit	Function	Terminal Type ID	Option
(1) 1	(1) 0.35	(1) WH / YE	(1) 7557	(1) Interior Door Handle Accent Lighting Control	(1) I	(1) —
(2) 2	(2) 0.35	(2) BK	(2) 1150	(2) Ground	(2) I	(2) —

E63P Front Side Door Inside Handle Illumination Lamp - Right

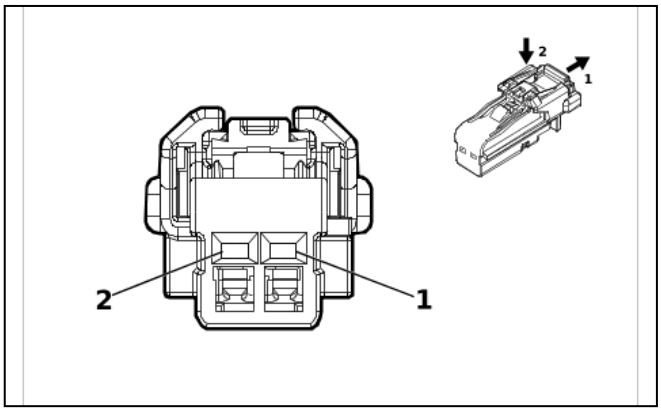

4115691

Connector Part Information
- Harness Type: Front Side Door Door Lock Door Wiring Harness - Passenger
- OEM Connector: 6098-8988
- Service Connector: Service by Harness - See Part Catalog
- Description: 2-Way F 1.2 MCON Series(BK)

Terminal Part Information

Terminal Type ID	Terminated Lead	Diagnostic Test Probe	Terminal Removal Tool
I	Not required	J-35616-16 (L-GN)	No Tool Required

E63P Front Side Door Inside Handle Illumination Lamp - Right

Pin	Size	Color	Circuit	Function	Terminal Type ID	Option
(1) 1	(1) 0.35	(1) WH / BN	(1) 2768	(1) LED Ambient Lighting Control Right Front Door	(1) I	(1) —
(2) 2	(2) 0.35	(2) BK	(2) 1250	(2) Ground	(2) I	(2) —

E63RR Rear Side Door Inside Handle Illumination Lamp - Right

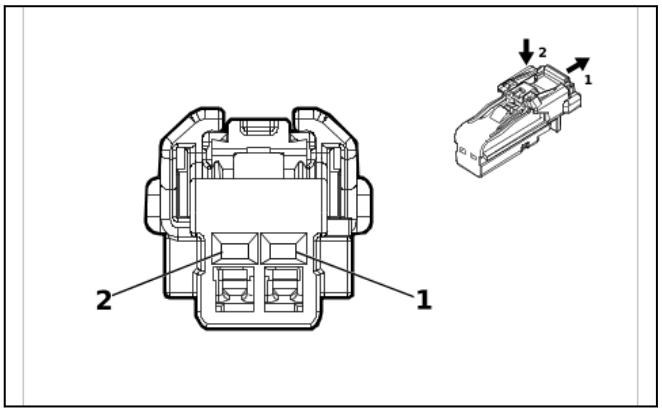

4115691

Connector Part Information

- Harness Type: Rear Side Door Door Lock Door Wiring Harness - Right
- OEM Connector: 6098-8988
- Service Connector: Service by Harness - See Part Catalog
- Description: 2-Way F 1.2 MCON Series(BK)

Terminal Part Information

Terminal Type ID	Terminated Lead	Diagnostic Test Probe	Terminal Removal Tool
I	Not required	J-35616-16 (L-GN)	No Tool Required

E63RR Rear Side Door Inside Handle Illumination Lamp - Right

Pin	Size	Color	Circuit	Function	Terminal Type ID	Option
(1) 1	(1) 0.35	(1) WH / YE	(1) 7557	(1) Interior Door Handle Accent Lighting Control	(1) I	(1) —
(2) 2	(2) 0.35	(2) BK	(2) 1250	(2) Ground	(2) I	(2) —

F101 Instrument Panel Airbag

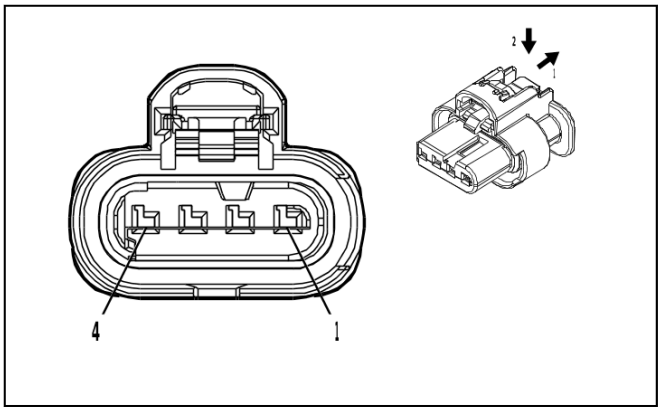

4900699

Connector Part Information

- Harness Type: Instrument Panel Wiring Harness
- OEM Connector: 2296700-3
- Service Connector: 19371193
- Description: 4-Way F 1.2 MCON-CB Series, Sealed(YE)

Terminal Part Information

Terminal Type ID	Terminated Lead	Diagnostic Test Probe	Terminal Removal Tool
I	Not required	J-35616-16 (L-GN)	No Tool Required

F101 Instrument Panel Airbag

Pin	Size	Color	Circuit	Function	Terminal Type ID	Option
(1) 1	(1) 0.5	(1) YE / OG	(1) 3025	(1) Passenger Instrument Panel Air Bag Stage 1 High Control	(1) I	(1) —
(2) 2	(2) 0.5	(2) OG / WH	(2) 3024	(2) Passenger Instrument Panel Air Bag Stage 1 Low Control	(2) I	(2) —
(3) 3	(3) 0.5	(3) GY / OG	(3) 3027	(3) Passenger Instrument Panel Air Bag Stage 2 High Control	(3) I	(3) —
(4) 4	(4) 0.5	(4) OG / VT	(4) 3026	(4) Passenger Instrument Panel Air Bag Stage 2 Low Control	(4) I	(4) —

F105LA Front and Rear and 3rd Row Roof Rail Airbag - Left

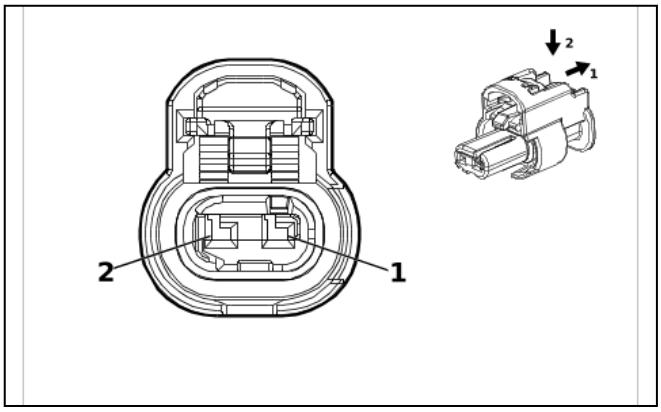

4036662

Connector Part Information
- Harness Type: Body Wiring Harness
- OEM Connector: 2296698-1
- Service Connector: 19369032
- Description: 2-Way F 1.2 MCON-CB Series, Sealed(YE)

Terminal Part Information

Terminal Type ID	Terminated Lead	Diagnostic Test Probe	Terminal Removal Tool
I	Not required	J-35616-16 (L-GN)	No Tool Required

F105LA Front and Rear and 3rd Row Roof Rail Airbag - Left

Pin	Size	Color	Circuit	Function	Terminal Type ID	Option
(1) 1	(1) 0.5	(1) OG / GN	(1) 5019	(1) Left Front Roof Rail Air Bag High Control	(1) I	(1) —
(2) 2	(2) 0.5	(2) VT / OG	(2) 5020	(2) Left Front Roof Rail Air Bag Low Control	(2) I	(2) —

F105RA Front and Rear and 3rd Row Roof Rail Airbag - Right

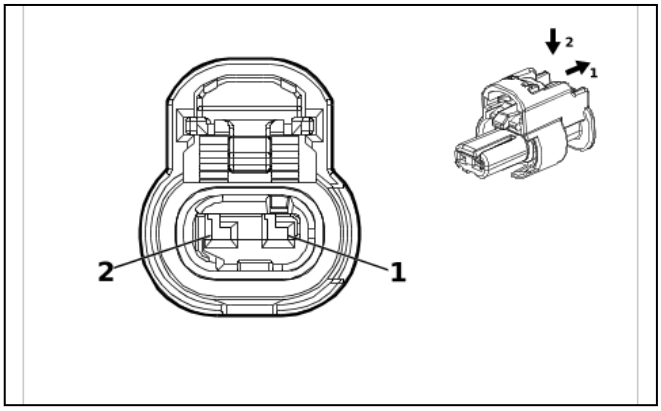

4036662

Connector Part Information
- Harness Type: Body Wiring Harness
- OEM Connector: 2296698-1
- Service Connector: 19369032
- Description: 2-Way F 1.2 MCON-CB Series, Sealed(YE)

Terminal Part Information

Terminal Type ID	Terminated Lead	Diagnostic Test Probe	Terminal Removal Tool
I	Not required	J-35616-16 (L-GN)	No Tool Required

F105RA Front and Rear and 3rd Row Roof Rail Airbag - Right

Pin	Size	Color	Circuit	Function	Terminal Type ID	Option
(1) 1	(1) 0.5	(1) OG / GY	(1) 5021	(1) Right Front Roof Rail Air Bag High Control	(1) I	(1) —
(2) 2	(2) 0.5	(2) WH / OG	(2) 5022	(2) Right Front Roof Rail Air Bag Low Control	(2) I	(2) —

F106D Front Seat Outboard Seat Back Airbag - Driver

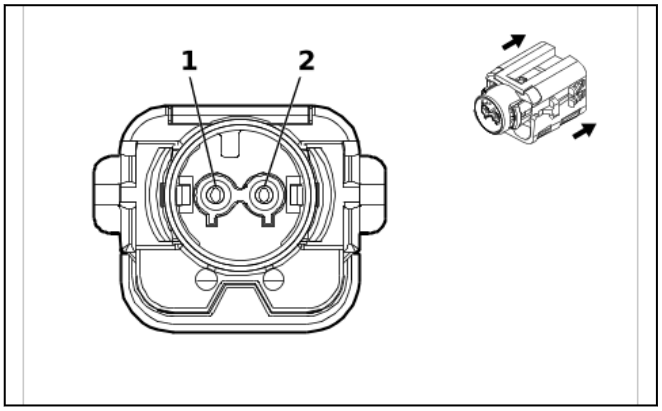

5499727

Connector Part Information

- Harness Type: Front Seat Wiring Harness - Driver
- OEM Connector: 35212936
- Service Connector: Service by Harness - See Part Catalog
- Description: 2-Way F ABX-5 Series(PK with YE Cover)

Terminal Part Information

Terminal Type ID	Terminated Lead	Diagnostic Test Probe	Terminal Removal Tool
I	Not required	No Tool Required	No Tool Required

F106D Front Seat Outboard Seat Back Airbag - Driver

Pin	Size	Color	Circuit	Function	Terminal Type ID	Option
(1) 1	(1) —	(1) OG / BU	(1) 4962	(1) Driver Seat Back Air Bag High Control	(1) I	(1) —
(2) 2	(2) —	(2) BK / OG	(2) 4963	(2) Driver Seat Back Air Bag Low Control	(2) I	(2) —

F106DA Front Seat Inboard Seat Back Airbag - Driver (ASD)

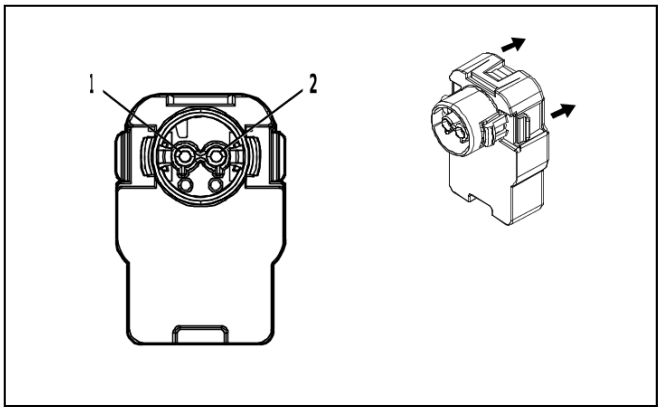

4823720

Connector Part Information

- Harness Type: Front Seat Wiring Harness - Driver
- OEM Connector: 1-1801930-3
- Service Connector: Service by Harness - See Part Catalog
- Description: 2-Way F ABX-5 Series(GY with YE Cover)

Terminal Part Information

Terminal Type ID	Terminated Lead	Diagnostic Test Probe	Terminal Removal Tool
I	Not required	No Tool Required	No Tool Required

F106DA Front Seat Inboard Seat Back Airbag - Driver (ASD)

Pin	Size	Color	Circuit	Function	Terminal Type ID	Option
(1) 1	(1) —	(1) OG / BN	(1) 4207	(1) Driver Inboard Seat Side Air Bag High Control	(1) I	(1) —
(2) 2	(2) —	(2) GY / OG	(2) 4208	(2) Driver Inboard Seat Side Air Bag Low Control	(2) I	(2) —
(52) 52	(52) —	(52) OG / BN	(52) 4207	(52) Driver Inboard Seat Side Air Bag High Control	(52) I	(52) —
(53) 53	(53) —	(53) GY / OG	(53) 4208	(53) Driver Inboard Seat Side Air Bag Low Control	(53) I	(53) —

F106P Front Seat Outboard Seat Back Airbag - Passenger

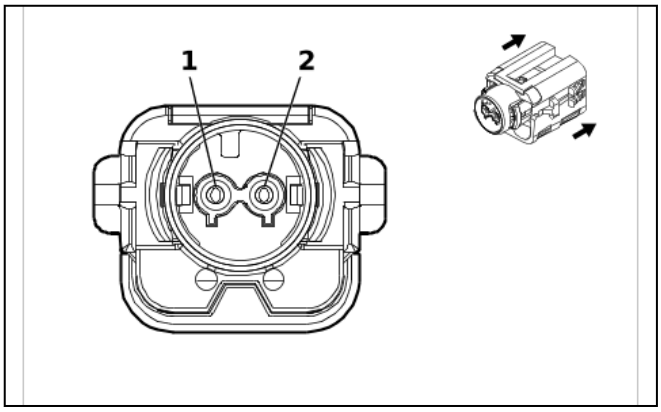

5499727

Connector Part Information
- Harness Type: Front Seat Wiring Harness - Passenger
- OEM Connector: 35212936
- Service Connector: Service by Harness - See Part Catalog
- Description: 2-Way F ABX-5 Series(PK with YE Cover)

Terminal Part Information

Terminal Type ID	Terminated Lead	Diagnostic Test Probe	Terminal Removal Tool
I	Not required	No Tool Required	No Tool Required

F106P Front Seat Outboard Seat Back Airbag - Passenger

Pin	Size	Color	Circuit	Function	Terminal Type ID	Option
(1) 1	(1) —	(1) OG / GY	(1) 4956	(1) Passenger Seat Back Air Bag High Control	(1) I	(1) —
(2) 2	(2) —	(2) BU / OG	(2) 4957	(2) Passenger Seat Back Air Bag Low Control	(2) I	(2) —

F107 Steering Wheel Airbag

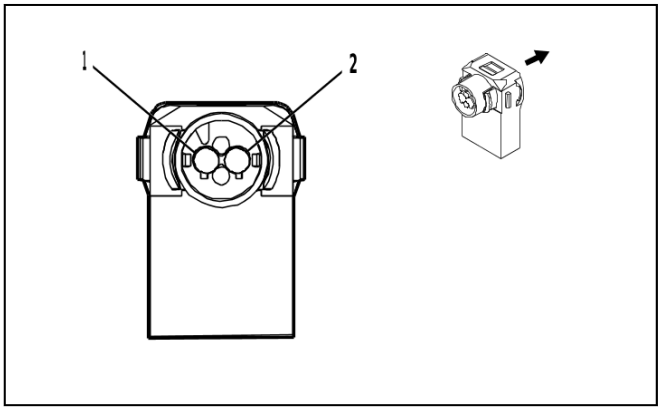

4679778

Connector Part Information
- Harness Type: Steering Wheel Horn Switch Wiring Harness
- OEM Connector: 35504154
- Service Connector: Service by Harness - See Part Catalog
- Description: 2-Way F ABX-5 Series(GY with YE Cover)

Terminal Part Information

Terminal Type ID	Terminated Lead	Diagnostic Test Probe	Terminal Removal Tool
I	Not required	J-35616-10 (GN)	No Tool Required

F107 Steering Wheel Airbag

Pin	Size	Color	Circuit	Function	Terminal Type ID	Option
(1) 1	(1) 0.5	(1) OG / VT	(1) 3021	(1) Steering Wheel Air Bag Stage 1 High Control	(1) I	(1) —
(2) 2	(2) 0.5	(2) BN / OG	(2) 3020	(2) Steering Wheel Air Bag Stage 1 Low Control	(2) I	(2) —

F112D Front Seat Belt Retractor - Driver

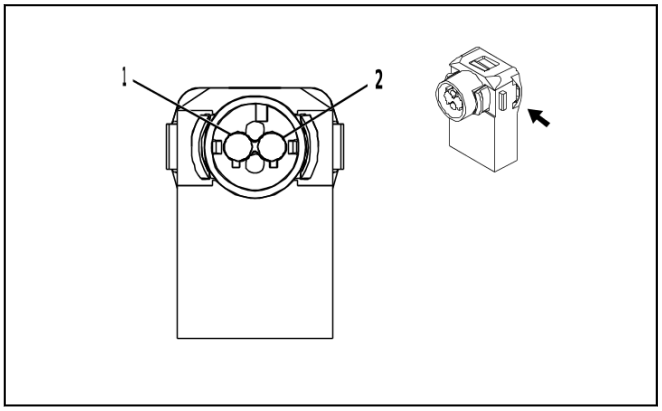

4241364

Connector Part Information

- Harness Type: Body Wiring Harness
- OEM Connector: 35504153
- Service Connector: 85666123
- Description: 2-Way F ABX-5 Series(PU with YE Cover)

Terminal Part Information

Terminal Type ID	Terminated Lead	Diagnostic Test Probe	Terminal Removal Tool
I	Not required	J-35616-10 (GN)	No Tool Required

F112D Front Seat Belt Retractor - Driver

Pin	Size	Color	Circuit	Function	Terminal Type ID	Option
(1) 1	(1) 0.5	(1) OG / WH	(1) 3477	(1) Driver Seat Belt Retractor Pretensioner High Control	(1) I	(1) —
(2) 2	(2) 0.5	(2) VT / OG	(2) 3478	(2) Driver Seat Belt Retractor Pretensioner Low Control	(2) I	(2) —

F112P Front Seat Belt Retractor - Passenger

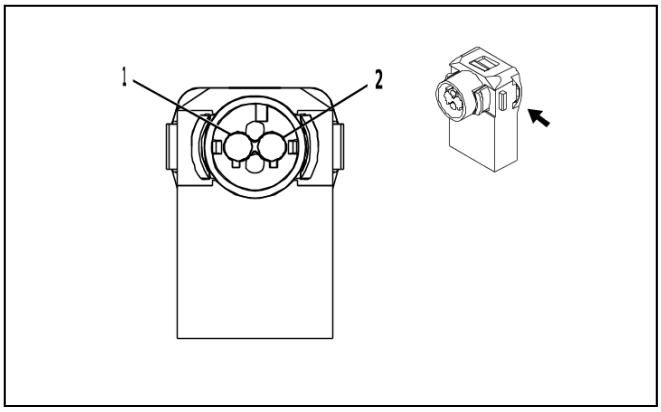

4241364

Connector Part Information
- Harness Type: Body Wiring Harness
- OEM Connector: 35504153
- Service Connector: 85666123
- Description: 2-Way F ABX-5 Series(PU with YE Cover)

Terminal Part Information

Terminal Type ID	Terminated Lead	Diagnostic Test Probe	Terminal Removal Tool
I	Not required	J-35616-10 (GN)	No Tool Required

F112P Front Seat Belt Retractor - Passenger

Pin	Size	Color	Circuit	Function	Terminal Type ID	Option
(1) 1	(1) 0.5	(1) OG / GN	(1) 3475	(1) Passenger Seat Belt Retractor Pretensioner High Control	(1) I	(1) —
(2) 2	(2) 0.5	(2) WH / OG	(2) 3476	(2) Passenger Seat Belt Retractor Pretensioner Low Control	(2) I	(2) —

F113D Front Seat Belt Anchor Plate Tensioner - Driver

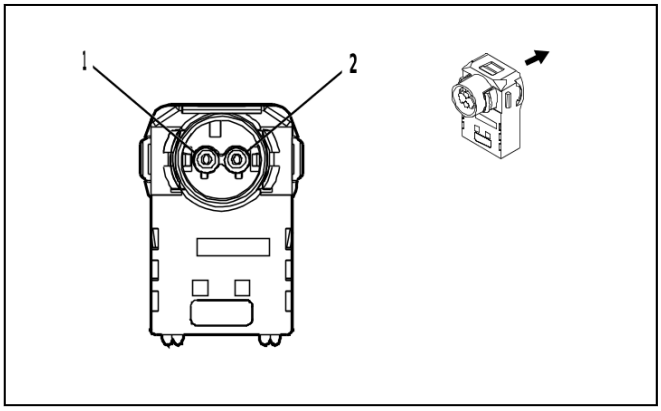

4231869

Connector Part Information
- Harness Type: Body Wiring Harness
- OEM Connector: 35504152
- Service Connector: 85666122
- Description: 2-Way F ABX-5 Series(PK with YE Cover)

Terminal Part Information

Terminal Type ID	Terminated Lead	Diagnostic Test Probe	Terminal Removal Tool
I	Not required	J-35616-10 (GN)	No Tool Required

F113D Front Seat Belt Anchor Plate Tensioner - Driver

Pin	Size	Color	Circuit	Function	Terminal Type ID	Option
(1) 1	(1) 0.5	(1) OG / YE	(1) 3481	(1) Driver Seat Belt Anchor Pretensioner High Control	(1) I	(1) —
(2) 2	(2) 0.5	(2) VT / OG	(2) 3482	(2) Driver Seat Belt Anchor Pretensioner Low Control	(2) I	(2) —

F113P Front Seat Belt Anchor Plate Tensioner - Passenger

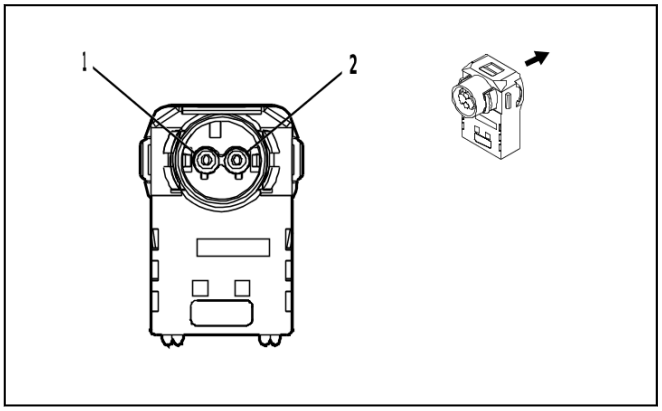

4231869

Connector Part Information

- Harness Type: Body Wiring Harness
- OEM Connector: 35504152
- Service Connector: 85666122
- Description: 2-Way F ABX-5 Series(PK with YE Cover)

Terminal Part Information

Terminal Type ID	Terminated Lead	Diagnostic Test Probe	Terminal Removal Tool
I	Not required	J-35616-10 (GN)	No Tool Required

F113P Front Seat Belt Anchor Plate Tensioner - Passenger

Pin	Size	Color	Circuit	Function	Terminal Type ID	Option
(1) 1	(1) 0.5	(1) OG / BN	(1) 3479	(1) Passenger Seat Belt Anchor Pretensioner High Control	(1) I	(1) —
(2) 2	(2) 0.5	(2) GY / OG	(2) 3480	(2) Passenger Seat Belt Anchor Pretensioner Low Control	(2) I	(2) —

G4 Automatic Level Control Air Compressor (F47)

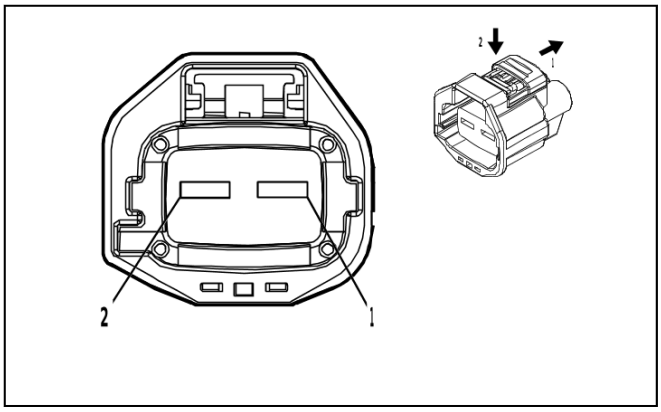

4584202

Connector Part Information
- Harness Type: Chassis Wiring Harness
- OEM Connector: 7287-6196-10
- Service Connector: 19368222
- Description: 2-Way F 6.3 Series, Sealed(D-GY)

Terminal Part Information

Terminal Type ID	Terminated Lead	Diagnostic Test Probe	Terminal Removal Tool
I	Not required	J-35616-42 (RD)	No Tool Required

G4 Automatic Level Control Air Compressor (F47)

Pin	Size	Color	Circuit	Function	Terminal Type ID	Option
(1) 1	(1) 2.5	(1) GN / BN	(1) 2357	(1) Vehicle Level Control Compressor Motor Control	(1) I	(1) —
(2) 2	(2) 2.5	(2) GY / BN	(2) 2693	(2) Leveling Compressor Motor Low Reference	(2) I	(2) —

G5 Automatic Transmission Auxiliary Fluid Pump

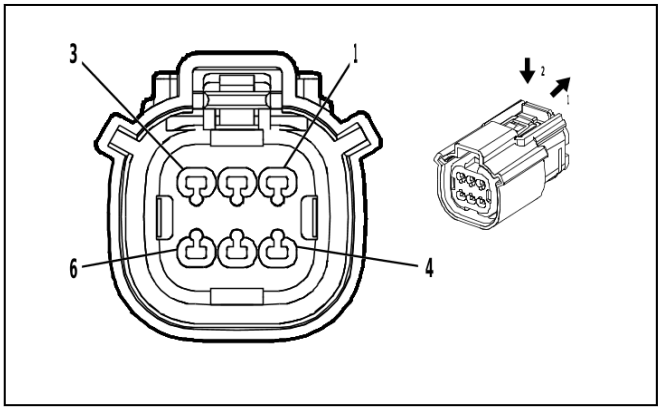

4574736

Connector Part Information
- Harness Type: Automatic Transmission Wiring Harness
- OEM Connector: 160038-3009
- Service Connector: Service by Harness - See Part Catalog
- Description: 6-Way F 1.5 MX Series, Sealed(WH)

Terminal Part Information

Terminal Type ID	Terminated Lead	Diagnostic Test Probe	Terminal Removal Tool
I	Not required	J-35616-2A (GY)	No Tool Required

G5 Automatic Transmission Auxiliary Fluid Pump

Pin	Size	Color	Circuit	Function	Terminal Type ID	Option
(1) 1	(1) 1.5	(1) GN / VT	(1) 8640	(1) Battery Positive Voltage	(1) I	(1) —
2	—	—	—	Not Occupied	—	—
(3) 3	(3) 0.5	(3) BN	(3) 6387	(3) Transmission High Side Driver 1 Control	(3) I	(3) —
(4) 4	(4) 0.5	(4) GY / OG	(4) 2968	(4) Transmission Auxiliary Fluid Pump Control	(4) I	(4) —
5	—	—	—	Not Occupied	—	—
(6) 6	(6) 1.5	(6) BK / YE	(6) 6550	(6) Ground	(6) I	(6) —

G10L Cooling Fan Motor - Left

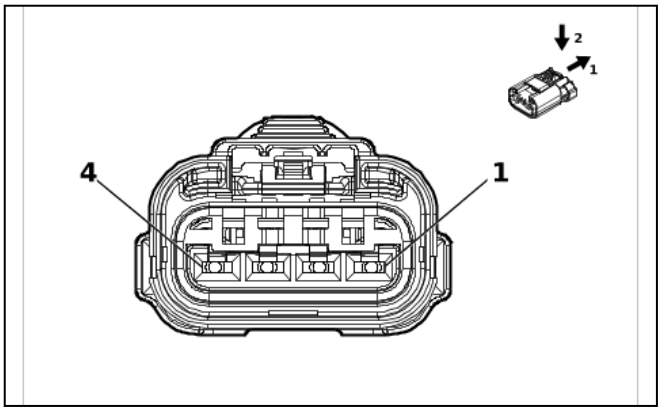

5838592

Connector Part Information

- Harness Type: Engine Wiring Harness
- OEM Connector: 35243535
- Service Connector: 85563415
- Description: 4-Way F 2.8 APEX Series, Sealed(BK)

Terminal Part Information

Terminal Type ID	Terminated Lead	Diagnostic Test Probe	Terminal Removal Tool
I	Not required	J-35616-2A (GY)	No Tool Required
II	Not required	J-35616-35 (VT)	No Tool Required
III	Not required	J-35616-4A (PU)	No Tool Required

G10L Cooling Fan Motor - Left

Pin	Size	Color	Circuit	Function	Terminal Type ID	Option
(1) 1	(1) 5	(1) BK	(1) 450	(1) Ground	(1) III	(1) —
(2) 2	(2) 5	(2) RD / BU	(2) 1842	(2) Battery Positive Voltage	(2) III	(2) —

Pin	Size	Color	Circuit	Function	Terminal Type ID	Option
3	—	—	—	Not Occupied	—	—
(4) 4	(4) 0.75 (4) 0.75	(4) GN / VT (4) GN / VT	(4) 4621 (4) 4621	(4) Engine Control Module LIN Bus 1 (4) Engine Control Module LIN Bus 1	(4) I (4) II	(4) L84/ L87 (4) LZ0

G10LW Cooling Fan Motor - Lower (LZ0)

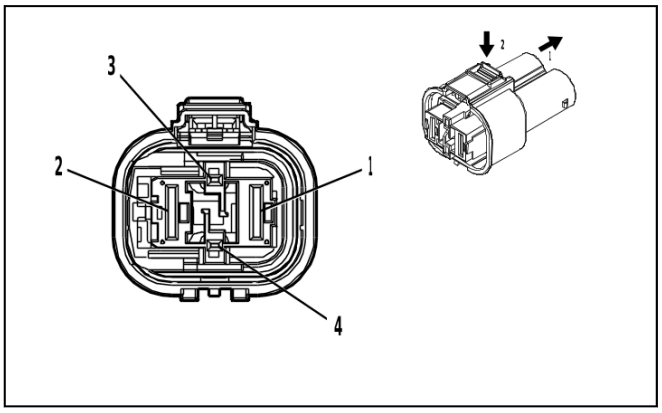

4847569

Connector Part Information

- Harness Type: Engine Wiring Harness
- OEM Connector: 4-2286732-1
- Service Connector: 84766431
- Description: 4-Way F 1.2, 9.5 MCON Series, Sealed(BK)

Terminal Part Information

Terminal Type ID	Terminated Lead	Diagnostic Test Probe	Terminal Removal Tool
I	Not required	J-35616-12 (BU)	No Tool Required
II	Not required	J-35616-22 (RD)	No Tool Required

G10LW Cooling Fan Motor - Lower (LZ0)

Pin	Size	Color	Circuit	Function	Terminal Type ID	Option
(1) 1	(1) 5	(1) RD / BU	(1) 1542	(1) Battery Positive Voltage	(1) II	(1) —
(2) 2	(2) 5	(2) BK	(2) 450	(2) Ground	(2) II	(2) —
(3) 3	(3) 0.5	(3) GN / YE	(3) 4623	(3) Engine Control Module LIN Bus 3	(3) I	(3) —
4	—	—	—	Not Occupied	—	—

G10R Cooling Fan Motor - Right (L84 / L87)

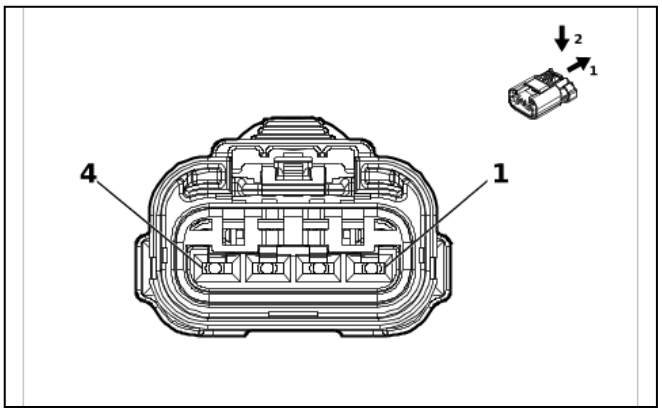

5838592

Connector Part Information

- Harness Type: Engine Wiring Harness
- OEM Connector: 35243535
- Service Connector: 85563415
- Description: 4-Way F 2.8 APEX Series, Sealed(BK)

Terminal Part Information

Terminal Type ID	Terminated Lead	Diagnostic Test Probe	Terminal Removal Tool
I	Not required	J-35616-2A (GY)	No Tool Required
II	Not required	J-35616-4A (PU)	No Tool Required

G10R Cooling Fan Motor - Right (L84 / L87)

Pin	Size	Color	Circuit	Function	Terminal Type ID	Option
(1) 1	(1) 5	(1) BK	(1) 450	(1) Ground	(1) II	(1) —
(2) 2	(2) 5	(2) RD / BN	(2) 1742	(2) Battery Positive Voltage	(2) II	(2) —
3	—	—	—	Not Occupied	—	—
(4) 4	(4) 0.75	(4) GN / VT	(4) 4621	(4) Engine Control Module LIN Bus 1	(4) I	(4) —

G10R Cooling Fan Motor - Right (LZ0)

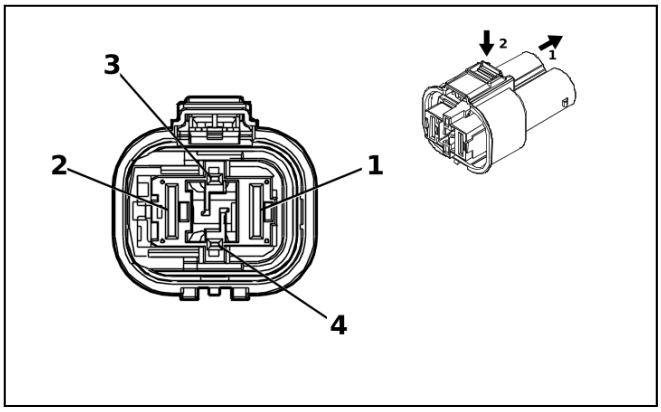

5187743

Connector Part Information

- Harness Type: Engine Wiring Harness
- OEM Connector: 4-2286732-2
- Service Connector: Service by Harness - See Part Catalog
- Description: 4-Way F 1.2, 9.5 MCON Series(GY)

Terminal Part Information

Terminal Type ID	Terminated Lead	Diagnostic Test Probe	Terminal Removal Tool
I	Not required	J-35616-16 (L-GN)	No Tool Required
II	Not required	J-35616-22 (RD)	No Tool Required

G10R Cooling Fan Motor - Right (LZ0)

Pin	Size	Color	Circuit	Function	Terminal Type ID	Option
(1) 1	(1) 10	(1) RD / YE	(1) 1442	(1) Battery Positive Voltage	(1) II	(1) —
(2) 2	(2) 8	(2) BK	(2) 450	(2) Ground	(2) II	(2) —
(3) 3	(3) 0.5	(3) GN / VT	(3) 4621	(3) Engine Control Module LIN Bus 1	(3) I	(3) —
4	—	—	—	Not Occupied	—	—

G13 Generator X1

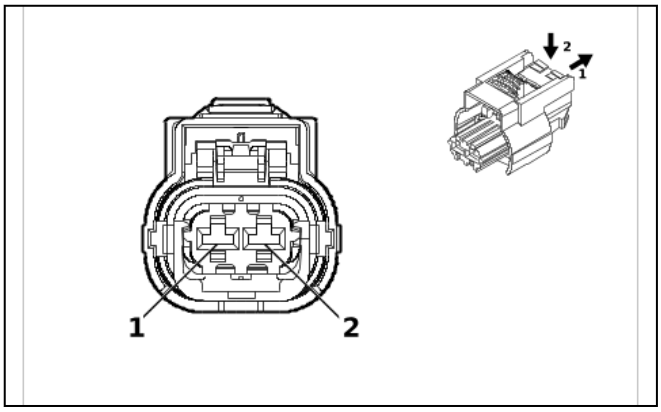

4992524

Connector Part Information

- Harness Type: Engine Wiring Harness
- OEM Connector: 35182447
- Service Connector: 84941154
- Description: 2-Way F 2.8 MCP Series, Sealed(BK)

Terminal Part Information

Terminal Type ID	Terminated Lead	Diagnostic Test Probe	Terminal Removal Tool
I	Not required	J-35616-35 (VT)	No Tool Required
II	Not required	J-35616-4A (PU)	No Tool Required

G13 Generator X1

Pin	Size	Color	Circuit	Function	Terminal Type ID	Option
(1) 1	(1) 0.5 (1) 0.5	(1) BN (1) BN	(1) 25 (1) 25	(1) Charge Indicator Control (1) Charge Indicator Control	(1) I (1) II	(1) L84/ L87 (1) LZ0
(2) 2	(2) 0.5 (2) 0.5	(2) GY (2) GY	(2) 23 (2) 23	(2) Generator Field Duty Cycle Signal (2) Generator Field Duty Cycle Signal	(2) I (2) II	(2) L84/ L87 (2) LZ0

G13 Generator X2 (L84 / L87)

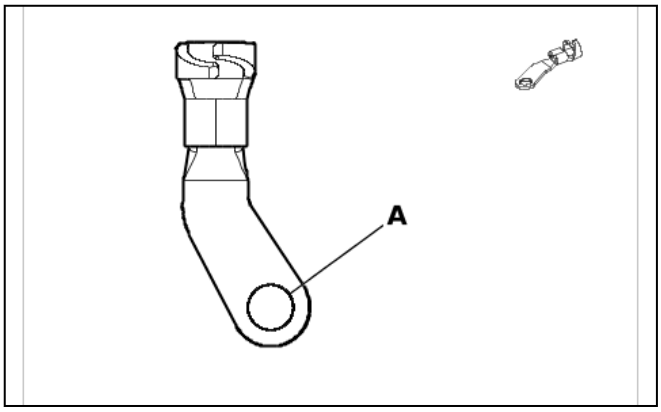

5911279

Connector Part Information
- Harness Type: Starter Solenoid Cable
- OEM Connector: 84238913
- Service Connector: Service by Cable Assembly — See Part Catalog
- Description: 1-Way Ring Terminal

Terminal Part Information

Terminal Type ID	Terminated Lead	Diagnostic Test Probe	Terminal Removal Tool
I	Not required	No Tool Required	No Tool Required

G13 Generator X2 (L84 / L87)

Pin	Size	Color	Circuit	Function	Terminal Type ID	Option
A	35	RD / GN	242	Battery Positive Voltage	I	L84/ L87

G13 Generator X2 (LZ0)

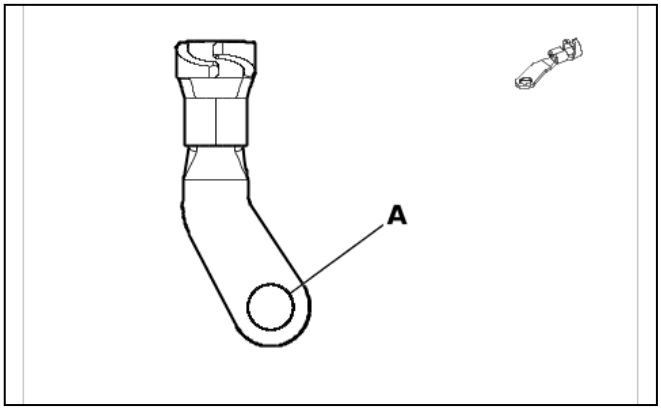

5911279

Connector Part Information
- Harness Type: Generator Battery Jumper Cable
- OEM Connector: 84238913
- Service Connector: Service by Cable Assembly — See Part Catalog
- Description: 1-Way Ring Terminal

Terminal Part Information

Terminal Type ID	Terminated Lead	Diagnostic Test Probe	Terminal Removal Tool
I	Not required	No Tool Required	No Tool Required

G13 Generator X2 (LZ0)

Pin	Size	Color	Circuit	Function	Terminal Type ID	Option
A	35	RD / GN	242	Battery Positive Voltage	I	LZ0

G17 Heater Coolant Pump

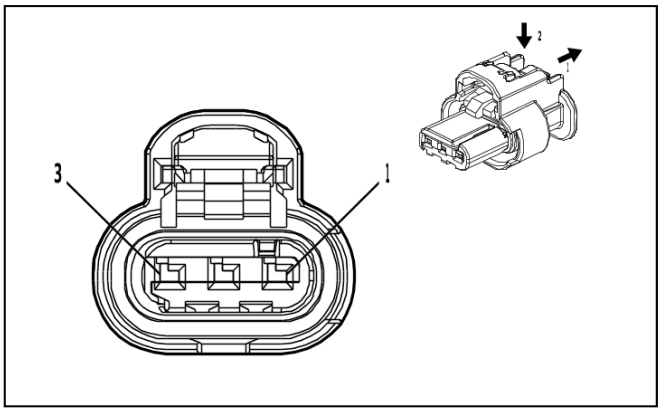

4581126

Connector Part Information

- Harness Type: Engine Wiring Harness
- OEM Connector: 1-2296695-1
- Service Connector: 86792094
- Description: 3-Way F 1.2 MCON-CB Series, Sealed(BK)

Terminal Part Information

Terminal Type ID	Terminated Lead	Diagnostic Test Probe	Terminal Removal Tool
I	Not required	J-35616-16 (L-GN)	No Tool Required

G17 Heater Coolant Pump

Pin	Size	Color	Circuit	Function	Terminal Type ID	Option
(1) 1	(1) 0.75	(1) BK	(1) 6550	(1) Ground	(1) I	(1) —
(2) 2	(2) 0.5	(2) RD / BN	(2) 5940	(2) Battery Positive Voltage	(2) I	(2) —
(3) 3	(3) 0.5	(3) GN / VT	(3) 4621	(3) Engine Control Module LIN Bus 1	(3) I	(3) —

G18 Fuel Pump - High Pressure (L84 / L87)

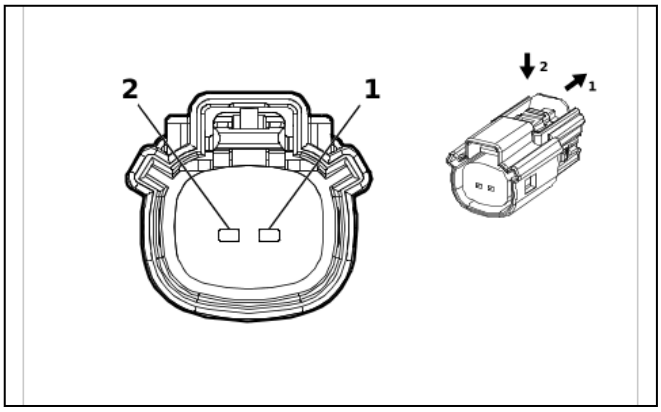

2474713

Connector Part Information
- Harness Type: Fuel Injector Wiring Harness - Right
- OEM Connector: 33471-0206
- Service Connector: Service by Harness - See Part Catalog
- Description: 2-Way F 1.5 Series, Sealed(BK)

Terminal Part Information

Terminal Type ID	Terminated Lead	Diagnostic Test Probe	Terminal Removal Tool
I	Not required	J-35616-14 (GN)	No Tool Required

G18 Fuel Pump - High Pressure (L84 / L87)

Pin	Size	Color	Circuit	Function	Terminal Type ID	Option
(1) 1	(1) 0.75	(1) VT / BK	(1) 7300	(1) High Pressure Fuel Pump Low Control	(1) I	(1) —
(2) 2	(2) 0.75	(2) YE	(2) 7301	(2) High Pressure Fuel Pump High Control	(2) I	(2) —

G24 Windshield Washer Pump

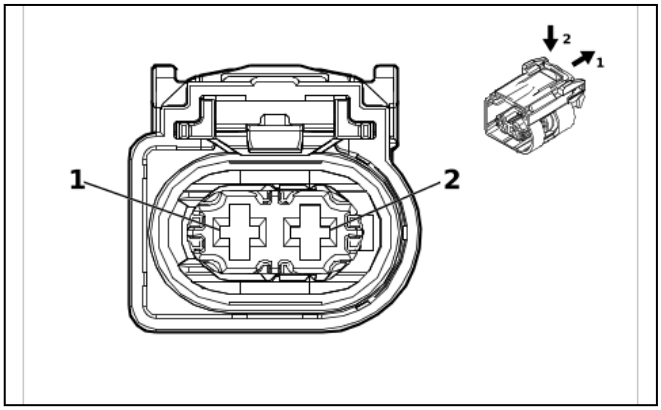

5580410

Connector Part Information
- Harness Type: Body Wiring Harness
- OEM Connector: 2425741-1
- Service Connector: 85005016
- Description: 2-Way F 2.8 MCP Series, Sealed(BK)

Terminal Part Information

Terminal Type ID	Terminated Lead	Diagnostic Test Probe	Terminal Removal Tool
I	Not required	J-35616-4A (PU)	No Tool Required

G24 Windshield Washer Pump

Pin	Size	Color	Circuit	Function	Terminal Type ID	Option
(1) 1	(1) 0.75	(1) BU / VT	(1) 392	(1) Rear Window Washer Pump Control	(1) I	(1) —
(2) 2	(2) 0.75	(2) GY / VT	(2) 228	(2) Windshield Washer Pump Control	(2) I	(2) —

G31D Front Seat Back Lumbar Pump - Driver (AVK)

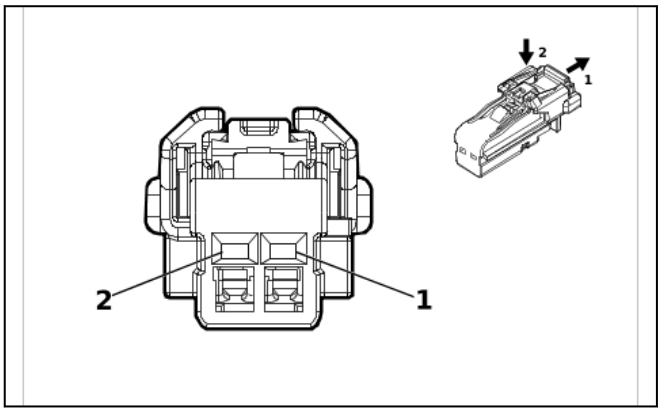

4115691

Connector Part Information

- Harness Type: Front Seat Wiring Harness - Driver
- OEM Connector: 13532422
- Service Connector: Service by Harness - See Part Catalog
- Description: 2-Way F 1.2 MCON Series(BK)

Terminal Part Information

Terminal Type ID	Terminated Lead	Diagnostic Test Probe	Terminal Removal Tool
I	Not required	No Tool Required	No Tool Required

G31D Front Seat Back Lumbar Pump - Driver (AVK)

Pin	Size	Color	Circuit	Function	Terminal Type ID	Option
(1) 1	(1) —	(1) WH / BU	(1) 4891	(1) Driver Seat Lumbar/Bolster Pump Control	(1) I	(1) —
(2) 2	(2) —	(2) BN / BK	(2) 2305	(2) Driver Seat Bolster Pump Low Reference	(2) I	(2) —

G31P Front Seat Back Lumbar Pump - Passenger (AVU)

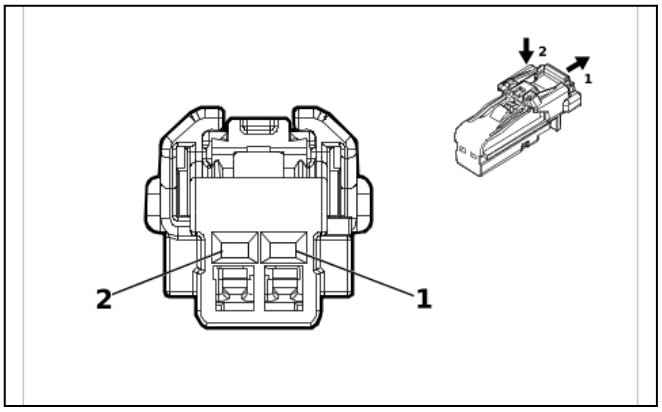

4115691

Connector Part Information
- Harness Type: Front Seat Wiring Harness - Passenger
- OEM Connector: 13532422
- Service Connector: Service by Harness - See Part Catalog
- Description: 2-Way F 1.2 MCON Series(BK)

Terminal Part Information

Terminal Type ID	Terminated Lead	Diagnostic Test Probe	Terminal Removal Tool
I	Not required	No Tool Required	No Tool Required

G31P Front Seat Back Lumbar Pump - Passenger (AVU)

Pin	Size	Color	Circuit	Function	Terminal Type ID	Option
(1) 1	(1) —	(1) GY / WH	(1) 4890	(1) Passenger Seat Lumbar/Bolster Pump Control	(1) I	(1) —
(2) 2	(2) —	(2) BK	(2) 1250	(2) Ground	(2) I	(2) —

K4 Running Board Control Module X1 (B3L)

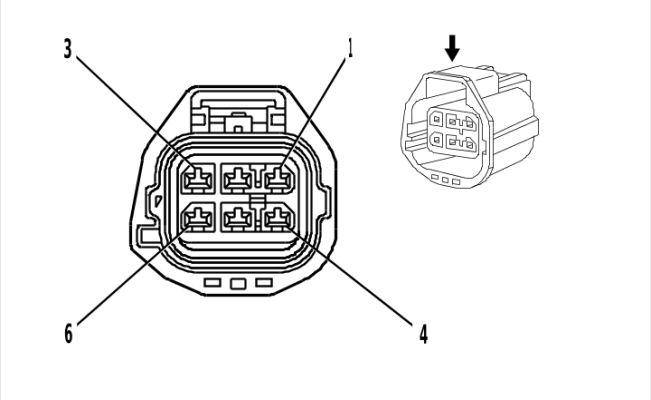

1420587

Connector Part Information
- Harness Type: Chassis Wiring Harness
- OEM Connector: 7287-9814-10
- Service Connector: 19368306
- Description: 6-Way F 2.8 Series, Sealed(GY)

Terminal Part Information

Terminal Type ID	Terminated Lead	Diagnostic Test Probe	Terminal Removal Tool
I	Not required	J-35616-35 (VT)	No Tool Required

K4 Running Board Control Module X1 (B3L)

Pin	Size	Color	Circuit	Function	Terminal Type ID	Option
(1) 1	(1) 2.5	(1) RD / YE	(1) 1142	(1) Battery Positive Voltage	(1) I	(1) —
(2) 2	(2) 2	(2) GY	(2) 7472	(2) Left Running Board Step Motor Control Retract	(2) I	(2) —
(3) 3	(3) 2	(3) BU	(3) 7470	(3) Right Running Board Step Motor Control Extend	(3) I	(3) —
(4) 4	(4) 2.5	(4) BK	(4) 1650	(4) Ground	(4) I	(4) —
(5) 5	(5) 2	(5) WH / BN	(5) 7471	(5) Left Running Board Step Motor Control Extend	(5) I	(5) —
(6) 6	(6) 2	(6) GN	(6) 7469	(6) Right Left Running Board Step Motor Control Retract	(6) I	(6) —

K4 Running Board Control Module X2 (B3L)

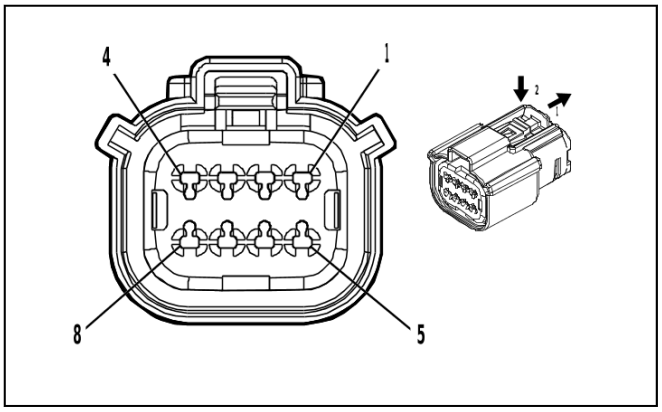

4846407

Connector Part Information

- Harness Type: Chassis Wiring Harness
- OEM Connector: 33472-4846
- Service Connector: 84928314
- Description: 8-Way F 1.5 MX Series, Sealed(BK)

Terminal Part Information

Terminal Type ID	Terminated Lead	Diagnostic Test Probe	Terminal Removal Tool
I	Not required	J-35616-2A (GY)	No Tool Required

K4 Running Board Control Module X2 (B3L)

Pin	Size	Color	Circuit	Function	Terminal Type ID	Option
1	—	—	—	Not Occupied	—	—
(2) 2	(2) 0.5	(2) WH / VT	(2) 4986	(2) AUTOSAR CAN Bus [-] 1 Serial Data	(2) I	(2) —

Pin	Size	Color	Circuit	Function	Terminal Type ID	Option
(3) 3	(3) 0.5	(3) BU / WH	(3) 4987	(3) AUTOSAR CAN Bus [+] 1 Serial Data	(3) I	(3) —
4 - 5	—	—	—	Not Occupied	—	—
(6) 6	(6) 0.5	(6) WH	(6) 4986	(6) AUTOSAR CAN Bus [-] 1 Serial Data	(6) I	(6) —
(7) 7	(7) 0.5	(7) BU	(7) 4987	(7) AUTOSAR CAN Bus [+] 1 Serial Data	(7) I	(7) —
8	—	—	—	Not Occupied	—	—

K4 Running Board Control Module X3 (B3L)

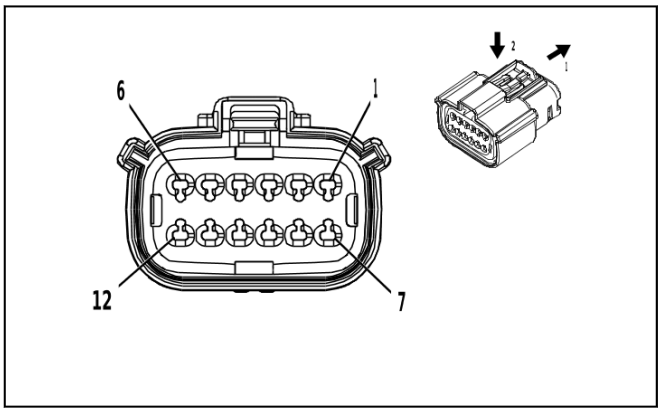

2871860

Connector Part Information

- Harness Type: Chassis Wiring Harness
- OEM Connector: 33472-6223
- Service Connector: 19352907
- Description: 12-Way F 1.5 MX Series, Sealed(BK)

Terminal Part Information

Terminal Type ID	Terminated Lead	Diagnostic Test Probe	Terminal Removal Tool
I	85528055	J-35616-2A (GY)	J-38125-217

K4 Running Board Control Module X3 (B3L)

Pin	Size	Color	Circuit	Function	Terminal Type ID	Option
(1) 1	(1) 0.5	(1) GN / RD	(1) 7464	(1) Right Running Board Step Motor Hall Sensor 5V Reference	(1) I	(1) —
(2) 2	(2) 0.5	(2) VT	(2) 7465	(2) Right Running Board Step Motor Hall Sensor Signal	(2) I	(2) —
(3) 3	(3) 0.5	(3) YE / BK	(3) 7463	(3) Right Running Board Step Motor Hall Sensor Low Reference	(3) I	(3) —
(4) 4	(4) 0.5	(4) BN	(4) 4748	(4) Left Running Board Step Courtesy Lamp Control	(4) I	(4) —
(5) 5	(5) 0.5	(5) GY / VT	(5) 4749	(5) Right Running Board Step Courtesy Lamp Control	(5) I	(5) —
6	—	—	—	Not Occupied	—	—
(7) 7	(7) 0.5	(7) VT / RD	(7) 7468	(7) Left Running Board Step Motor Hall Sensor 5V Reference	(7) I	(7) —

Pin	Size	Color	Circuit	Function	Terminal Type ID	Option
(8) 8	(8) 0.5	(8) YE	(8) 7467	(8) Left Running Board Step Motor Hall Sensor Signal	(8) I	(8) —
(9) 9	(9) 0.5	(9) YE / BN	(9) 7466	(9) Left Running Board Step Motor Hall Sensor Low Reference	(9) I	(9) —
10 - 12	—	—	—	Not Occupied	—	—

K5 Automatic Level Control Module (F47)

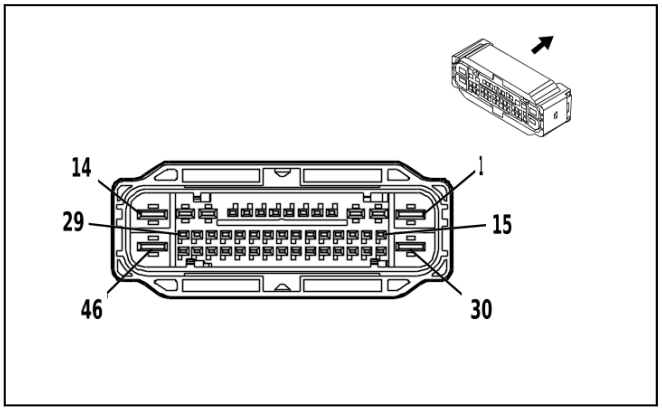

4162046

Connector Part Information

- Harness Type: Chassis Wiring Harness
- OEM Connector: 13557960
- Service Connector: 85090369
- Description: 46-Way F 1.2 OCS, 2.8, 6.3 CTS Series, Sealed(GY)

Terminal Part Information

Terminal Type ID	Terminated Lead	Diagnostic Test Probe	Terminal Removal Tool
I	13575368	J-35616-35 (VT)	J-38125-36
II	19370818	J-35616-12 (BU)	J-38125-215A
III	84634921	J-35616-42 (RD)	J-38125-212

K5 Automatic Level Control Module (F47)

Pin	Size	Color	Circuit	Function	Terminal Type ID	Option
(1) 1	(1) 3	(1) RD / BU	(1) 7640	(1) Battery Positive Voltage	(1) III	(1) —
(2) 2	(2) 0.75	(2) RD / BN	(2) 2940	(2) Battery Positive Voltage	(2) I	(2) —
3 - 6	—	—	—	Not Occupied	—	—
(7) 7	(7) 0.5	(7) WH / GN	(7) 320	(7) Vehicle Level Control Exhaust Solenoid Valve Control	(7) II	(7) —
8	—	—	—	Not Occupied	—	—
(9) 9	(9) 0.5	(9) WH / BU	(9) 3261	(9) Vehicle Level Control Exhaust Solenoid Valve Control	(9) II	(9) —
(10) 10	(10) 0.5	(10) BU / BK	(10) 4977	(10) AUTOSAR CAN Bus [+] 3 Serial Data	(10) II	(10) —
(11) 11	(11) 0.5	(11) WH	(11) 4976	(11) AUTOSAR CAN Bus [-] 3 Serial Data	(11) II	(11) —

Pin	Size	Color	Circuit	Function	Terminal Type ID	Option
12	—	—	—	Not Occupied	—	—
(13) 13	(13) 0.75	(13) BK	(13) 2150	(13) Ground	(13) I	(13) —
(14) 14	(14) 3	(14) BK	(14) 2150	(14) Ground	(14) III	(14) —
15 - 17	—	—	—	Not Occupied	—	—
(18) 18	(18) 0.5	(18) BK / BU	(18) 1206	(18) Left Front Suspension Position Sensor Low Reference	(18) II	(18) —
(19) 19	(19) 0.5	(19) BN / WH	(19) 1207	(19) Left Front Suspension Position Sensor Signal	(19) II	(19) —
(20) 20	(20) 0.5	(20) BU / RD	(20) 1205	(20) Left Front Suspension Position Sensor Voltage Reference	(20) II	(20) —
(21) 21	(21) 0.5	(21) YE / RD	(21) 1208	(21) Left Rear Suspension Position Sensor Voltage Reference	(21) II	(21) —
(22) 22	(22) 0.5	(22) GN / WH	(22) 1210	(22) Left Rear Suspension Position Sensor Signal	(22) II	(22) —
(23) 23	(23) 0.5	(23) BK / GN	(23) 1209	(23) Left Rear Suspension Position Sensor Low Reference	(23) II	(23) —
(24) 24	(24) 0.5	(24) BU / BK	(24) 4977	(24) AUTOSAR CAN Bus [+] 3 Serial Data	(24) II	(24) —
(25) 25	(25) 0.5	(25) WH	(25) 4976	(25) AUTOSAR CAN Bus [-] 3 Serial Data	(25) II	(25) —
26 - 29	—	—	—	Not Occupied	—	—
(30) 30	(30) 2.5	(30) GN / BN	(30) 2357	(30) Vehicle Level Control Compressor Motor Control	(30) III	(30) —
31 - 33	—	—	—	Not Occupied	—	—
(34) 34	(34) 0.5	(34) BK / GY	(34) 1212	(34) Right Front Suspension Position Sensor Low Reference	(34) II	(34) —
(35) 35	(35) 0.5	(35) YE / WH	(35) 1213	(35) Right Front Suspension Position Sensor Signal	(35) II	(35) —
(36) 36	(36) 0.5	(36) BN / RD	(36) 1211	(36) Right Front Suspension Position Sensor Voltage Reference	(36) II	(36) —
(37) 37	(37) 0.5	(37) GN / RD	(37) 1214	(37) Right Rear Suspension Position Sensor Voltage Reference	(37) II	(37) —
(38) 38	(38) 0.5	(38) GN / GY	(38) 1216	(38) Right Rear Suspension Position Sensor Signal	(38) II	(38) —
(39) 39	(39) 0.5	(39) BK / YE	(39) 1215	(39) Right Rear Suspension Position Sensor Low Reference	(39) II	(39) —
40 - 45	—	—	—	Not Occupied	—	—
(46) 46	(46) 2.5	(46) GY / BN	(46) 2693	(46) Leveling Compressor Motor Low Reference	(46) III	(46) —

K8AB Blower Motor Control Module - Rear X1

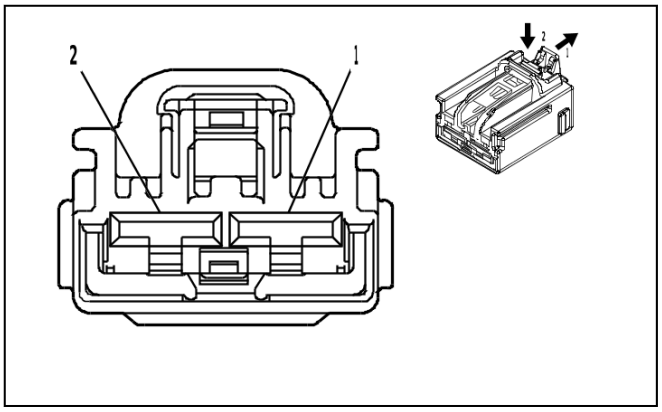

5116029

Connector Part Information
- Harness Type: Rear Blower Motor
- OEM Connector: Not Available
- Service Connector: Service by Harness - See Part Catalog
- Description: 2-Way

Terminal Part Information

Terminal Type ID	Terminated Lead	Diagnostic Test Probe	Terminal Removal Tool
I	Not required	No Tool Required	No Tool Required

K8AB Blower Motor Control Module - Rear X1

Pin	Size	Color	Circuit	Function	Terminal Type ID	Option
(1) 1	(1) 2.5	(1) GY / BN	(1) 101	(1) Blower Motor Control 2	(1) I	(1) —
(2) 2	(2) 2.5	(2) BU / BK	(2) 5988	(2) Rear Blower Motor Control	(2) I	(2) —

K8AB Blower Motor Control Module - Rear X2

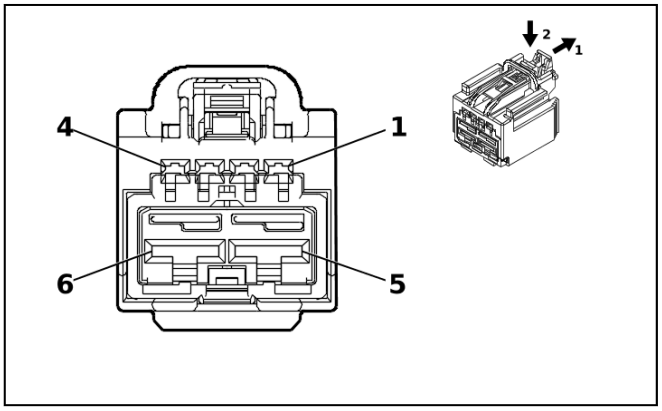

5355899

Connector Part Information
- Harness Type: Auxiliary Heater and Air Conditioning Wiring Harness
- OEM Connector: 7289-9870-30
- Service Connector: Service by Harness - See Part Catalog
- Description: 6-Way F 1.5, 6.3 YESC Series(BK)

Terminal Part Information

Terminal Type ID	Terminated Lead	Diagnostic Test Probe	Terminal Removal Tool
I	Not required	J-35616-2A (GY)	No Tool Required
II	Not required	J-35616-42 (RD)	No Tool Required

K8AB Blower Motor Control Module - Rear X2

Pin	Size	Color	Circuit	Function	Terminal Type ID	Option
1 - 2	—	—	—	Not Occupied	—	—
(3) 3	(3) 0.35	(3) BN	(3) 2211	(3) Rear Blower Motor Speed Control	(3) I	(3) —
4	—	—	—	Not Occupied	—	—
(5) 5	(5) 3	(5) BK	(5) 1450	(5) Ground	(5) II	(5) —
(6) 6	(6) 3	(6) RD / YE	(6) 1740	(6) Battery Positive Voltage	(6) II	(6) —

K9 Body Control Module X1

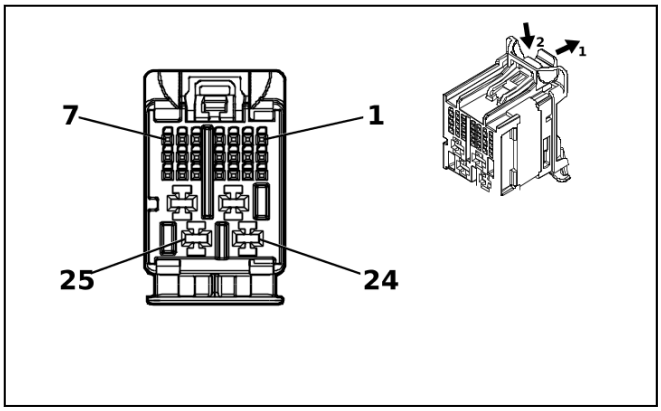

5203995

Connector Part Information

- Harness Type: Instrument Panel Wiring Harness
- OEM Connector: 160027-0013
- Service Connector: 13534967
- Description: 25-Way F 0.5 MQS, 2.8 MCP Series(BK with GY Inner Connector)

Terminal Part Information

Terminal Type ID	Terminated Lead	Diagnostic Test Probe	Terminal Removal Tool
I	19370262	EL-35616-58 (BK)	EL-38125-58
II	87814662	J-35616-35 (VT)	J-38125-557

K9 Body Control Module X1

Pin	Size	Color	Circuit	Function	Terminal Type ID	Option
(1) 1	(1) 0.35	(1) WH / BK	(1) 4782	(1) Instrument Panel Accent Lighting Control	(1) I	(1) —
2	—	—	—	Not Occupied	—	—
(3) 3	(3) 0.35	(3) GY / YE	(3) 7543	(3) Hazard Warning Indicator LED Dimming Signal	(3) I	(3) —

Pin	Size	Color	Circuit	Function	Terminal Type ID	Option
(4) 4	(4) 0.35	(4) VT	(4) 7558	(4) Front Footwell Accent Lighting Control	(4) I	(4) S0M
(5) 5	(5) 0.35	(5) BU / GY	(5) 754	(5) Blower Motor Speed Control	(5) I	(5) —
(6) 6	(6) 0.35	(6) WH / YE	(6) 4634	(6) HVAC Remote Enable Signal	(6) I	(6) —
7 - 10	—	—	—	Not Occupied	—	—
(11) 11	(11) 0.35	(11) GY / GN	(11) 4636	(11) HVAC System Enable Signal	(11) I	(11) —
(12) 12	(12) 0.35	(12) GY	(12) 728	(12) Security Indicator Control	(12) I	(12) —
(13) 13	(13) 0.35	(13) YE	(13) 6812	(13) Out of Park Signal	(13) I	(13) —
14	—	—	—	Not Occupied	—	—
(15) 15	(15) 0.35	(15) GY	(15) 590	(15) Driver Solar Sensor Signal	(15) I	(15) —
(16) 16	(16) 0.35	(16) GY	(16) 6137	(16) Air Conditioning Evaporator Temperature Sensor Signal	(16) I	(16) —
(17) 17	(17) 0.35	(17) WH / BU	(17) 278	(17) Ambient Light Sensor Signal	(17) I	(17) —
(18) 18	(18) 0.35	(18) BU / WH	(18) 734	(18) Inside Air Temperature Sensor Signal	(18) I	(18) —
19	—	—	—	Not Occupied	—	—
(20) 20	(20) 0.35	(20) GN / VT	(20) 2852	(20) Body Control Module LIN Bus 6	(20) I	(20) —
21 - 22	—	—	—	Not Occupied	—	—
(23) 23	(23) 1	(23) RD / GY	(23) 2840	(23) Battery Positive Voltage	(23) II	(23) —
24	—	—	—	Not Occupied	—	—
(25) 25	(25) 0.75	(25) RD / GY	(25) 2140	(25) Battery Positive Voltage	(25) II	(25) —

K9 Body Control Module X2

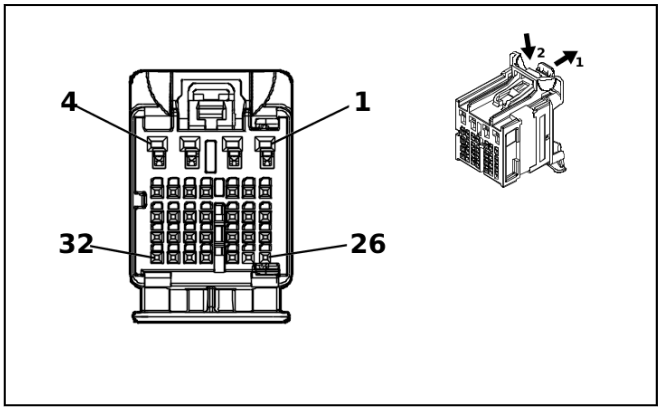

5204222

Connector Part Information

- Harness Type: Instrument Panel Wiring Harness
- OEM Connector: 160028-0015
- Service Connector: 13534980
- Description: 32-Way F 0.5 NANO, 1.2 MCON, stAK50h Series(PK with GY Inner Connector)

Terminal Part Information

Terminal Type ID	Terminated Lead	Diagnostic Test Probe	Terminal Removal Tool
I	19370262	EL-35616-58 (BK)	EL-38125-58
II	84729890	J-35616-12 (BU)	J-38125-215A

K9 Body Control Module X2

Pin	Size	Color	Circuit	Function	Terminal Type ID	Option
(1) 1	(1) 0.5	(1) GY	(1) 157	(1) Interior Lamp Control	(1) II	(1) —
2 - 4	—	—	—	Not Occupied	—	—
(5) 5	(5) 0.35	(5) BU / GN	(5) 5723	(5) Ignition Mode Switch Mode Voltage	(5) I	(5) —
6 - 8	—	—	—	Not Occupied	—	—
(9) 9	(9) 0.35	(9) VT / YE	(9) 5526	(9) Tap Up/Tap Down Switch Signal	(9) I	(9) —
(10) 10	(10) 0.35	(10) WH / BN	(10) 2203	(10) Enhanced Driver Mode 2 Switch Signal	(10) I	(10) —
11	—	—	—	Not Occupied	—	—
(12) 12	(12) 0.35	(12) YE / BU	(12) 1714	(12) Windshield Wiper Switch Low Signal	(12) I	(12) —
(13) 13	(13) 0.35	(13) BN / GN	(13) 11875	(13) Cruise Control Bank 2 Switch Signal	(13) I	(13) —
(14) 14	(14) 0.35	(14) GY / GN	(14) 11874	(14) Cruise Control Bank 1 Switch Signal	(14) I	(14) —
15	—	—	—	Not Occupied	—	—
(16) 16	(16) 0.35	(16) BN / BK	(16) 5720	(16) Ignition Mode Switch Accessory LED Signal	(16) I	(16) —
17 - 18	—	—	—	Not Occupied	—	—
(19) 19	(19) 0.35	(19) WH / VT	(19) 103	(19) Headlamp Switch On Signal	(19) I	(19) —
(20) 20	(20) 0.35	(20) GN / GY	(20) 13	(20) Headlamp Switch Park Lamp Signal	(20) I	(20) —
(21) 21	(21) 0.35	(21) GN / BN	(21) 306	(21) Headlamp Switch Off Signal	(21) I	(21) —
(22) 22	(22) 0.35	(22) GY / BU	(22) 3602	(22) Curb View Enable Signal	(22) I	(22) —
(23) 23	(23) 0.35	(23) VT / BU	(23) 2916	(23) Right Turn Signal Switch Signal	(23) I	(23) —
24	—	—	—	Not Occupied	—	—
(25) 25	(25) 0.35	(25) BK / GY	(25) 6009	(25) Windshield Wiper Switch Low Reference	(25) I	(25) —
(26) 26	(26) 0.35	(26) WH / BK	(26) 94	(26) Windshield Washer Switch Signal	(26) I	(26) —
(27) 27	(27) 0.35	(27) YE / BN	(27) 307	(27) Headlamp Switch Flash Signal	(27) I	(27) —
(28) 28	(28) 0.35	(28) GN / WH	(28) 3287	(28) Horn Switch Signal	(28) I	(28) —
(29) 29	(29) 0.35	(29) WH / GN	(29) 2915	(29) Left Turn Signal Switch Signal	(29) I	(29) —
(30) 30	(30) 0.35	(30) BK / YE	(30) 407	(30) Sensor Low Reference	(30) I	(30) —

Pin	Size	Color	Circuit	Function	Terminal Type ID	Option
(31) 31	(31) 0.35	(31) GN / WH	(31) 111	(31) Hazard Warning Switch Signal	(31) I	(31) —
(32) 32	(32) 0.35	(32) WH	(32) 524	(32) High Beam Select Switch High Beam Signal	(32) I	(32) —

K9 Body Control Module X3

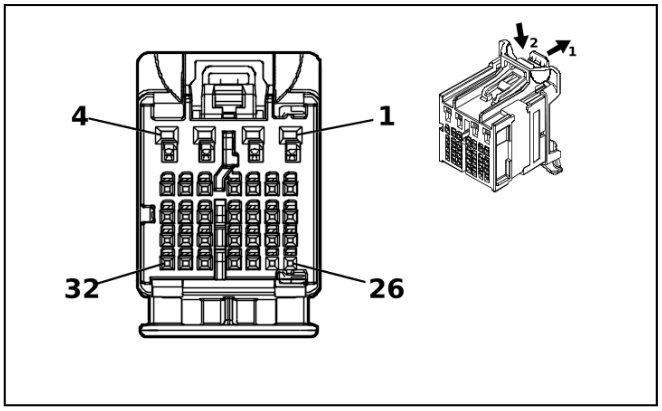

5203925

Connector Part Information

- Harness Type: Instrument Panel Wiring Harness
- OEM Connector: 160028-0012
- Service Connector: 13534977
- Description: 32-Way F 0.5 NANO, 1.2 MCON, stAK50h Series(BU with GY Inner Connector)

Terminal Part Information

Terminal Type ID	Terminated Lead	Diagnostic Test Probe	Terminal Removal Tool
I	19370262	EL-35616-58 (BK)	EL-38125-58
II	84729890	J-35616-12 (BU)	J-38125-215A

K9 Body Control Module X3

Pin	Size	Color	Circuit	Function	Terminal Type ID	Option
1	—	—	—	Not Occupied	—	—
(2) 2	(2) 0.5	(2) BN / BU	(2) 4892	(2) Auxiliary Battery Relay Control	(2) II	(2) —
3 - 4	—	—	—	Not Occupied	—	—
(5) 5	(5) 0.35	(5) GN / BN	(5) 2853	(5) Body Control Module LIN Bus 7	(5) I	(5) —
(6) 6	(6) 0.35	(6) BN / BU	(6) 391	(6) Rear Window Wiper Switch Signal	(6) I	(6) —
(7) 7	(7) 0.35	(7) WH / BN	(7) 7555	(7) Headlamp Switch Signal	(7) I	(7) —
8 - 9	—	—	—	Not Occupied	—	—
(10) 10	(10) 0.35	(10) GN / BK	(10) 2858	(10) Body Control Module LIN Bus 12	(10) I	(10) —
11 - 12	—	—	—	Not Occupied	—	—

Pin	Size	Color	Circuit	Function	Terminal Type ID	Option
(13) 13	(13) 0.35	(13) WH	(13) 3152	(13) Lane Departure Warning Indicator Control	(13) I	(13) —
(14) 14	(14) 0.35	(14) GN / BN	(14) 5852	(14) Rear Parking Assist Disable LED Signal	(14) I	(14) —
(15) 15	(15) 0.35	(15) GN	(15) 1110	(15) Stop/Start Indicator Control	(15) I	(15) —
(16) 16	(16) 0.35	(16) GN / BU	(16) 761	(16) Blower Speed Feedback Signal	(16) I	(16) —
17	—	—	—	Not Occupied	—	—
(18) 18	(18) 0.35	(18) YE	(18) 7556	(18) Headlamp Switch Reference	(18) I	(18) —
(19) 19	(19) 0.35	(19) BU / BK	(19) 5719	(19) Ignition Mode Switch Start LED Signal	(19) I	(19) —
(20) 20	(20) 0.35	(20) WH / VT	(20) 6821	(20) Surveillance Switch Signal	(20) I	(20) —
21	—	—	—	Not Occupied	—	—
(22) 22	(22) 0.35	(22) BN / GY	(22) 8021	(22) Police Microphone Enable Signal	(22) I	(22) —
(23) 23	(23) 0.35	(23) BU	(23) 1111	(23) Stop/Start Switch Signal	(23) I	(23) —
(24) 24	(24) 0.35	(24) WH / BU	(24) 3691	(24) Trailer Brake Apply Signal	(24) I	(24) —
25 - 26	—	—	—	Not Occupied	—	—
(27) 27	(27) 0.35	(27) GY / WH	(27) 3153	(27) Lane Departure Warning Disable Switch Signal	(27) I	(27) —
28	—	—	—	Not Occupied	—	—
(29) 29	(29) 0.35	(29) GY / VT	(29) 8022	(29) Police Roof Lamp Control	(29) I	(29) —
(30) 30	(30) 0.35	(30) BU / YE	(30) 6844	(30) ABS/Traction Control Hill Descent Control Switch Signal	(30) I	(30) —
(31) 31	(31) 0.35	(31) GY / GN	(31) 2555	(31) Rear Parking Assist Disable Signal	(31) I	(31) —
(32) 32	(32) 0.35	(32) BU / BN	(32) 3161	(32) Parking Assist Parallel Parking Disable Switch Signal	(32) I	(32) —

K9 Body Control Module X4

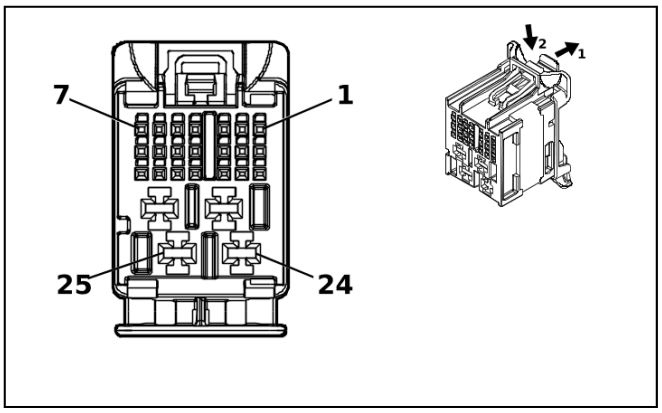

5203893

Connector Part Information

- Harness Type: Instrument Panel Wiring Harness
- OEM Connector: 160027-0018
- Service Connector: 13534970
- Description: 25-Way F 0.5 MQS, 2.8 MCP Series(GY)

Terminal Part Information

Terminal Type ID	Terminated Lead	Diagnostic Test Probe	Terminal Removal Tool
I	19370262	EL-35616-58 (BK)	EL-38125-58
II	87814662	J-35616-35 (VT)	J-38125-557

K9 Body Control Module X4

Pin	Size	Color	Circuit	Function	Terminal Type ID	Option
(1) 1	(1) 0.35	(1) BN / BK	(1) 3552	(1) Interior Passive Entry Antenna 1 High Signal	(1) I	(1) —
(2) 2	(2) 0.35	(2) WH	(2) 3553	(2) Interior Passive Entry Antenna 1 Low Signal	(2) I	(2) —
(3) 3	(3) 0.35	(3) BK / VT	(3) 1449	(3) Steering Wheel Resistor Ladder Low Reference	(3) I	(3) —
4	—	—	—	Not Occupied	—	—
(5) 5	(5) 0.35	(5) GN / VT	(5) 5199	(5) Run/Crank Relay Coil Control	(5) I	(5) —
6	—	—	—	Not Occupied	—	—
(7) 7	(7) 0.35	(7) BN / BK	(7) 4996	(7) Immobilizer Antenna Signal [+]	(7) I	(7) —
8 - 9	—	—	—	Not Occupied	—	—
(10) 10	(10) 0.35	(10) GY / GN	(10) 4083	(10) Retained Accessory Power Relay 2 Coil Control	(10) I	(10) —
11 - 13	—	—	—	Not Occupied	—	—
(14) 14	(14) 0.35	(14) WH / GY	(14) 4997	(14) Immobilizer Antenna Low Signal	(14) I	(14) —
(15) 15	(15) 0.35	(15) BU / VT	(15) 1788	(15) Traction Control Switch Signal 1	(15) I	(15) —
(16) 16	(16) 0.35	(16) GN / WH	(16) 4115	(16) Body Control Module LIN Bus 5	(16) I	(16) —
17 - 18	—	—	—	Not Occupied	—	—

Pin	Size	Color	Circuit	Function	Terminal Type ID	Option
(19) 19	(19) 0.35	(19) BU / GN	(19) 4103	(19) AUTOSAR CAN Bus [+] 9 Serial Data	(19) I	(19) —
(20) 20	(20) 0.35	(20) WH / GN	(20) 4102	(20) AUTOSAR CAN Bus [-] 9 Serial Data	(20) I	(20) —
21	—	—	—	Not Occupied	—	—
(22) 22	(22) 0.5	(22) RD / WH	(22) 2740	(22) Battery Positive Voltage	(22) II	(22) —
(23) 23	(23) 1.5	(23) RD / BU	(23) 2540	(23) Battery Positive Voltage	(23) II	(23) —
(24) 24	(24) 2.5	(24) BK / WH	(24) 1851	(24) Signal Ground	(24) II	(24) —
(25) 25	(25) 2.5	(25) BK	(25) 1850	(25) Ground	(25) II	(25) —

K9 Body Control Module X5

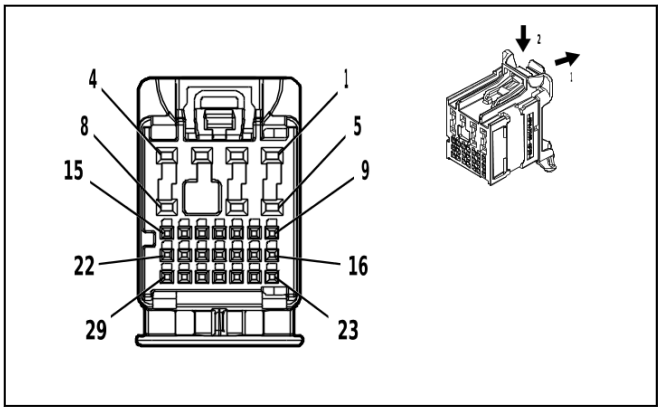

4584346

Connector Part Information

- Harness Type: Body Wiring Harness
- OEM Connector: 160014-0012
- Service Connector: 13534972
- Description: 29-Way F 0.5 NANO, 1.2 MCON Series(GN)

Terminal Part Information

Terminal Type ID	Terminated Lead	Diagnostic Test Probe	Terminal Removal Tool
I	19370262	EL-35616-58 (BK)	EL-38125-58
II	84729890	J-35616-12 (BU)	J-38125-215A

K9 Body Control Module X5

Pin	Size	Color	Circuit	Function	Terminal Type ID	Option
(1) 1	(1) 0.75	(1) GN / VT	(1) 4786	(1) Dome/Reading Lamp Enable Signal	(1) II	(1) —
(2) 2	(2) 0.5	(2) BU / BN	(2) 7573	(2) Air Conditioning Compressor Solenoid Valve Control	(2) II	(2) —
(3) 3	(3) 0.5	(3) BU / YE	(3) 7574	(3) Air Conditioning Compressor Solenoid Valve Control	(3) II	(3) —
(4) 4	(4) 0.75	(4) WH	(4) 2679	(4) Lock Actuators Unlock Control 1	(4) II	(4) —

Pin	Size	Color	Circuit	Function	Terminal Type ID	Option
(5) 5	(5) 0.5	(5) GY	(5) 157	(5) Interior Lamp Control	(5) II	(5) —
(6) 6	(6) 0.5	(6) YE	(6) 6817	(6) LED Backlight Dimming Control 1	(6) II	(6) —
7	—	—	—	Not Occupied	—	—
(8) 8	(8) 0.75	(8) GY	(8) 2681	(8) Left Front Door Lock Actuator Lock Control	(8) II	(8) —
9 - 10	—	—	—	Not Occupied	—	—
(11) 11	(11) 0.35	(11) BN / WH	(11) 28	(11) Horn Relay Control	(11) I	(11) —
(12) 12	(12) 0.35	(12) WH / GN	(12) 4102	(12) AUTOSAR CAN Bus [-] 9 Serial Data	(12) I	(12) —
(13) 13	(13) 0.35	(13) BU / GN	(13) 4103	(13) AUTOSAR CAN Bus [+] 9 Serial Data	(13) I	(13) —
14	—	—	—	Not Occupied	—	—
(15) 15	(15) 0.35	(15) WH / YE	(15) 7557	(15) Interior Door Handle Accent Lighting Control	(15) I	(15) —
(16) 16	(16) 0.35	(16) VT	(16) 4301	(16) Passive Entry Left Antenna Signal High	(16) I	(16) —
(17) 17	(17) 0.35	(17) GN / YE	(17) 2855	(17) Body Control Module LIN Bus 9	(17) I	(17) —
(18) 18	(18) 0.35	(18) VT / GY	(18) 126	(18) Left Front Door Open Switch Signal	(18) I	(18) —
(19) 19	(19) 0.35	(19) GN / YE	(19) 6134	(19) Body Control Module LIN Bus 3	(19) I	(19) —
20	—	—	—	Not Occupied	—	—
(21) 21	(21) 0.35	(21) WH / BU	(21) 6311	(21) Cruise/ETC/TCC Brake Signal	(21) I	(21) —
(22) 22	(22) 0.35	(22) BN / VT	(22) 193	(22) Rear Defogger Relay Control	(22) I	(22) —
(23) 23	(23) 0.35	(23) VT / WH	(23) 4302	(23) Passive Entry Left Antenna Signal Low	(23) I	(23) —
(24) 24	(24) 0.35	(24) WH	(24) 5359	(24) Brake Apply Sensor Control	(24) I	(24) —
(25) 25	(25) 0.35	(25) BU / YE	(25) 5361	(25) Brake Apply Sensor Signal	(25) I	(25) —
(26) 26	(26) 0.35	(26) BK / BN	(26) 5360	(26) Brake Apply Sensor Low Reference	(26) I	(26) —
27 - 29	—	—	—	Not Occupied	—	—

K9 Body Control Module X6

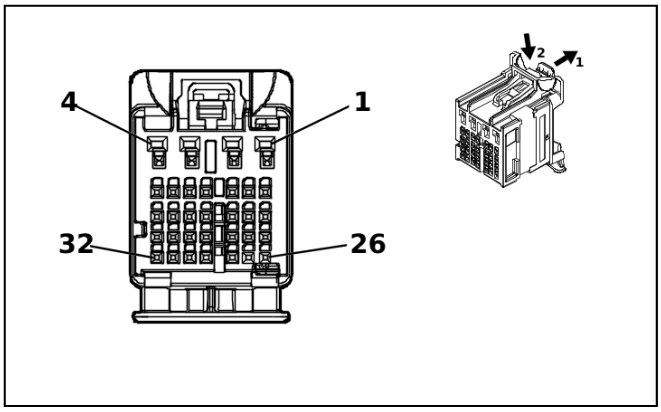

5202291

Connector Part Information

- Harness Type: Body Wiring Harness
- OEM Connector: 160028-0017
- Service Connector: 13534981
- Description: 32-Way F 0.5 MQS, 1.2 OCS Series(BN with GY Inner Connector)

Terminal Part Information

Terminal Type ID	Terminated Lead	Diagnostic Test Probe	Terminal Removal Tool
I	19370262	EL-35616-58 (BK)	EL-38125-58
II	84729890	J-35616-12 (BU)	J-38125-215A

K9 Body Control Module X6

Pin	Size	Color	Circuit	Function	Terminal Type ID	Option
1	—	—	—	Not Occupied	—	—
(2) 2	(2) 0.75	(2) VT / WH	(2) 1094	(2) Right Rear Door Lock Actuator Lock Control	(2) II	(2) —
(3) 3	(3) 0.75	(3) GY / BK	(3) 2680	(3) Lock Actuators Unlock Control 2	(3) II	(3) —
4	—	—	—	Not Occupied	—	—
(5) 5	(5) 0.35	(5) YE / BU	(5) 5797	(5) Rear Closure Handle Switch Open Signal	(5) I	(5) —
6	—	—	—	Not Occupied	—	—
(7) 7	(7) 0.35	(7) BN / GN	(7) 3568	(7) Rear Closure Passive Entry Antenna High Signal	(7) I	(7) —
(8) 8	(8) 0.35	(8) GN / GY	(8) 3569	(8) Rear Closure Passive Entry Antenna Low Signal	(8) I	(8) —
9 - 10	—	—	—	Not Occupied	—	—
(11) 11	(11) 0.35	(11) GN / BU	(11) 6133	(11) Body Control Module LIN Bus 2	(11) I	(11) —
12 - 16	—	—	—	Not Occupied	—	—
(17) 17	(17) 0.35	(17) BU / BN	(17) 8917	(17) Left Front Door Ajar Switch Signal 2	(17) I	(17) —
18 - 21	—	—	—	Not Occupied	—	—
(22) 22	(22) 0.35	(22) BN / GN	(22) 4064	(22) Hood Status B Signal	(22) I	(22) —

Pin	Size	Color	Circuit	Function	Terminal Type ID	Option
23 - 27	—	—	—	Not Occupied	—	—
(28) 28	(28) 0.35	(28) BU	(28) 2675	(28) Left Front Exterior Door Handle Switch Unlock Signal	(28) I	(28) —
29 - 30	—	—	—	Not Occupied	—	—
(31) 31	(31) 0.35	(31) GY / BU	(31) 4995	(31) Right Rear Door Exterior Switch Unlock Signal	(31) I	(31) —
32	—	—	—	Not Occupied	—	—

K9 Body Control Module X7

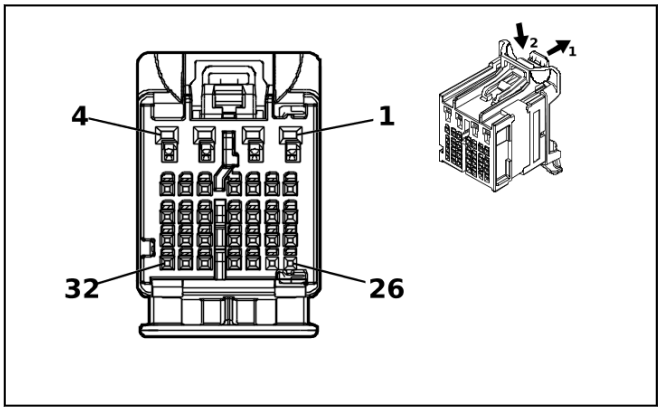

5202294

Connector Part Information

- Harness Type: Body Wiring Harness
- OEM Connector: 160028-0014
- Service Connector: 13534979
- Description: 32-Way F 0.5 MQS, 1.2 OCS Series(PU with GY Inner Connector)

Terminal Part Information

Terminal Type ID	Terminated Lead	Diagnostic Test Probe	Terminal Removal Tool
I	19370262	EL-35616-58 (BK)	EL-38125-58
II	84729890	J-35616-12 (BU)	J-38125-215A

K9 Body Control Module X7

Pin	Size	Color	Circuit	Function	Terminal Type ID	Option
1	—	—	—	Not Occupied	—	—
(2) 2	(2) 0.75	(2) BU	(2) 2689	(2) Fuel Door Actuator Lock Control	(2) II	(2) —
(3) 3	(3) 0.75	(3) WH / BU	(3) 3266	(3) Child Security Lock Motor Lock Control	(3) II	(3) —
4	—	—	—	Not Occupied	—	—
(5) 5	(5) 0.35	(5) GY / BK	(5) 3268	(5) Child Security Lock Actuator Status Signal Right Rear	(5) I	(5) —
(6) 6	(6) 0.35	(6) BN / WH	(6) 3269	(6) Child Security Lock Actuator Status Signal Left Rear	(6) I	(6) —
7	—	—	—	Not Occupied	—	—

Pin	Size	Color	Circuit	Function	Terminal Type ID	Option
(8) 8	(8) 0.35	(8) WH / VT	(8) 12481	(8) Hands Free Closure Release Sensor Alarm Control	(8) I	(8) —
9 - 11	—	—	—	Not Occupied	—	—
(12) 12	(12) 0.35	(12) GN / VT	(12) 2860	(12) Body Control Module LIN Bus 14	(12) I	(12) —
13 - 16	—	—	—	Not Occupied	—	—
(17) 17	(17) 0.35	(17) GY / YE	(17) 6188	(17) Liftgate Window/Rear Compartment Lid Motor Unlatch Control	(17) I	(17) —
(18) 18	(18) 0.35	(18) GN / GY	(18) 737	(18) Rear Compartment Courtesy Lamp Control	(18) I	(18) —
(19) 19	(19) 0.35	(19) GN / VT	(19) 2857	(19) Body Control Module LIN Bus 11	(19) I	(19) —
20 - 23	—	—	—	Not Occupied	—	—
(24) 24	(24) 0.35	(24) YE	(24) 4783	(24) Rear Footwell Accent Lighting Control	(24) I	(24) S0M
25 - 26	—	—	—	Not Occupied	—	—
(27) 27	(27) 0.35	(27) VT / BU	(27) 7598	(27) Glass Breakage Sensor 2 Signal	(27) I	(27) —
28 - 32	—	—	—	Not Occupied	—	—

K9 Body Control Module X8

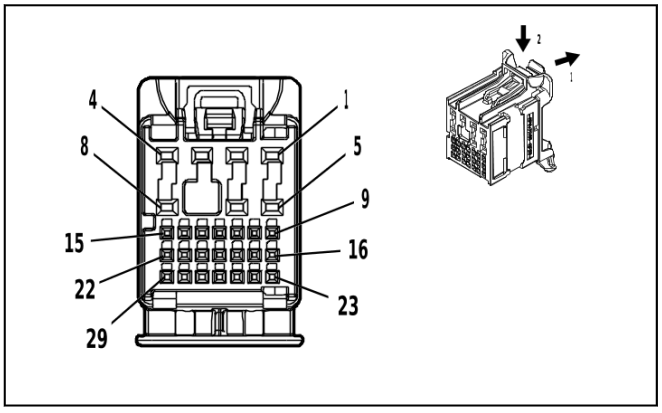

4578560

Connector Part Information

- Harness Type: Body Wiring Harness
- OEM Connector: 160014-0011
- Service Connector: 13534971
- Description: 29-Way F 0.5 NANO, 1.2 MCON, stAK50h Series(DK GY with GY Inner Connector)

Terminal Part Information

Terminal Type ID	Terminated Lead	Diagnostic Test Probe	Terminal Removal Tool
I	19370262	EL-35616-58 (BK)	EL-38125-58
II	84729890	J-35616-12 (BU)	J-38125-215A

K9 Body Control Module X8

Pin	Size	Color	Circuit	Function	Terminal Type ID	Option
(1) 1	(1) 0.5	(1) BU / WH	(1) 6128	(1) Rear Closure Unlatch Actuator Unlatch Control	(1) II	(1) —
2	—	—	—	Not Occupied	—	—
(3) 3	(3) 0.75	(3) BU / YE	(3) 1091	(3) Left Rear Door Lock Actuator Lock Control	(3) II	(3) —
(4) 4	(4) 0.75	(4) YE / GN	(4) 2682	(4) Right Front Door Lock Actuator Lock Control	(4) II	(4) —
5 - 8	—	—	—	Not Occupied	—	—
(9) 9	(9) 0.35	(9) GN / BK	(9) 4304	(9) Passive Entry Right Antenna Signal Low	(9) I	(9) —
(10) 10	(10) 0.35	(10) GN / YE	(10) 4303	(10) Passive Entry Right Antenna Signal High	(10) I	(10) —
(11) 11	(11) 0.35	(11) BU	(11) 3554	(11) Interior Passive Entry Antenna 2 High Signal	(11) I	(11) —
(12) 12	(12) 0.35	(12) GY / BK	(12) 3555	(12) Interior Passive Entry Antenna 2 Low Signal	(12) I	(12) —
(13) 13	(13) 0.35	(13) YE / BN	(13) 3037	(13) Driver Seat Left Rear Haptic Movement Motor Control	(13) I	(13) —
(14) 14	(14) 0.35	(14) BN	(14) 3038	(14) Driver Seat Right Rear Haptic Movement Motor Control	(14) I	(14) —
15	—	—	—	Not Occupied	—	—
(16) 16	(16) 0.35	(16) WH / VT	(16) 4994	(16) Left Rear Door Exterior Switch Unlock Signal	(16) I	(16) —
(17) 17	(17) 0.35	(17) GN / YE	(17) 2862	(17) Body Control Module LIN Bus 16	(17) I	(17) —
(18) 18	(18) 0.35	(18) GN / WH	(18) 2854	(18) Body Control Module LIN Bus 8	(18) I	(18) —
19	—	—	—	Not Occupied	—	—
(20) 20	(20) 0.35	(20) GN / BU	(20) 2856	(20) Body Control Module LIN Bus 10	(20) I	(20) —
(21) 21	(21) 0.35	(21) VT / WH	(21) 6675	(21) Left Rear Door Lock Indicator Control	(21) I	(21) —
(22) 22	(22) 0.35	(22) YE / BK	(22) 6677	(22) Right Rear Door Lock Indicator Control	(22) I	(22) —
23 - 27	—	—	—	Not Occupied	—	—
(28) 28	(28) 0.35	(28) GY / VT	(28) 2676	(28) Right Front Door Exterior Switch Unlock Signal	(28) I	(28) —
(29) 29	(29) 0.35	(29) GN / GY	(29) 6135	(29) Body Control Module LIN Bus 4	(29) I	(29) —

K19 Suspension Control Module (Z95)

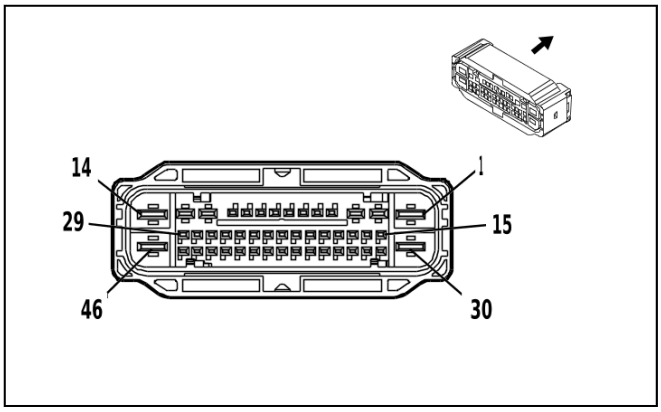

4162046

Connector Part Information

- Harness Type: Chassis Wiring Harness
- OEM Connector: 13557960
- Service Connector: 85090369
- Description: 46-Way F 1.2 OCS, 2.8, 6.3 CTS Series, Sealed(GY)

Terminal Part Information

Terminal Type ID	Terminated Lead	Diagnostic Test Probe	Terminal Removal Tool
I	19370818	J-35616-12 (BU)	J-38125-215A
II	84634921	J-35616-42 (RD)	J-38125-212

K19 Suspension Control Module (Z95)

Pin	Size	Color	Circuit	Function	Terminal Type ID	Option
(1) 1	(1) 0.75	(1) RD / GN	(1) 2440	(1) Battery Positive Voltage	(1) II	(1) —
2 - 4	—	—	—	Not Occupied	—	—
(5) 5	(5) 0.5	(5) BU / BK	(5) 4977	(5) AUTOSAR CAN Bus [+] 3 Serial Data	(5) I	(5) —
(6) 6	(6) 0.5	(6) BU / BK	(6) 4977	(6) AUTOSAR CAN Bus [+] 3 Serial Data	(6) I	(6) —
(7) 7	(7) 0.5	(7) WH	(7) 4976	(7) AUTOSAR CAN Bus [-] 3 Serial Data	(7) I	(7) —
(8) 8	(8) 0.5	(8) WH	(8) 4976	(8) AUTOSAR CAN Bus [-] 3 Serial Data	(8) I	(8) —
9	—	—	—	Not Occupied	—	—
(10) 10	(10) 0.5	(10) BN / BU	(10) 1116	(10) Right Front Shock Absorber Actuator Control	(10) I	(10) —
(11) 11	(11) 0.5	(11) GY / WH	(11) 1117	(11) Right Front Shock Absorber Actuator Control	(11) I	(11) —
12 - 13	—	—	—	Not Occupied	—	—
(14) 14	(14) 0.75 (14) 2.5	(14) BK (14) BK	(14) 2150 (14) 2150	(14) Ground (14) Ground	(14) II (14) II	(14) F47 (14) - F47
(15) 15	(15) 0.5	(15) BN / WH	(15) 1107	(15) Left Front Shock Absorber Actuator Control	(15) I	(15) —
16 - 21	—	—	—	Not Occupied	—	—

Pin	Size	Color	Circuit	Function	Terminal Type ID	Option
(22) 22	(22) 0.5	(22) BU / GY	(22) 1114	(22) Left Rear Shock Absorber Actuator Control	(22) I	(22) —
(23) 23	(23) 0.5	(23) BK / BN	(23) 1099	(23) Left Front Vertical Suspension Acceleration Sensor Low Reference	(23) I	(23) —
(24) 24	(24) 0.5	(24) WH	(24) 1100	(24) Left Front Vertical Suspension Acceleration Sensor Signal	(24) I	(24) —
(25) 25	(25) 0.5	(25) YE / RD	(25) 1817	(25) Left Front Vertical Suspension Acceleration Sensor Voltage Reference	(25) I	(25) —
(26) 26	(26) 0.5	(26) VT / RD	(26) 1818	(26) Left Rear Vertical Suspension Acceleration Sensor Voltage Reference	(26) I	(26) —
(27) 27	(27) 0.5	(27) YE / BN	(27) 1103	(27) Left Rear Vertical Suspension Acceleration Sensor Signal	(27) I	(27) —
(28) 28	(28) 0.5	(28) BK / VT	(28) 1833	(28) Left Rear Vertical Suspension Acceleration Sensor Low Reference	(28) I	(28) —
(29) 29	(29) 0.5	(29) BN / GN	(29) 1118	(29) Right Rear Shock Absorber Actuator Control	(29) I	(29) —
30	—	—	—	Not Occupied	—	—
(31) 31	(31) 0.5	(31) GY / BU	(31) 1113	(31) Left Front Shock Absorber Actuator Control	(31) I	(31) —
32 - 37	—	—	—	Not Occupied	—	—
(38) 38	(38) 0.5	(38) GN / VT	(38) 1115	(38) Left Rear Shock Absorber Actuator Control	(38) I	(38) —
(39) 39	(39) 0.5	(39) BK / GN	(39) 1105	(39) Right Front Vertical Suspension Acceleration Sensor Low Reference	(39) I	(39) —
(40) 40	(40) 0.5	(40) WH	(40) 1106	(40) Right Front Vertical Suspension Acceleration Sensor Signal	(40) I	(40) —
(41) 41	(41) 0.5	(41) BN / RD	(41) 1819	(41) Right Front Vertical Suspension Acceleration Sensor Voltage Reference	(41) I	(41) —
(42) 42	(42) 0.5	(42) GY / RD	(42) 1820	(42) Right Rear Vertical Suspension Acceleration Sensor Voltage Reference	(42) I	(42) —
(43) 43	(43) 0.5	(43) YE / BU	(43) 1109	(43) Right Rear Vertical Suspension Acceleration Sensor Signal	(43) I	(43) —
(44) 44	(44) 0.5	(44) BK / BU	(44) 1108	(44) Right Rear Vertical Suspension Acceleration Sensor Low Reference	(44) I	(44) —
(45) 45	(45) 0.5	(45) GN / GY	(45) 1119	(45) Right Rear Shock Absorber Actuator Control	(45) I	(45) —
46	—	—	—	Not Occupied	—	—

K20 Engine Control Module X1 (L84 / L87)

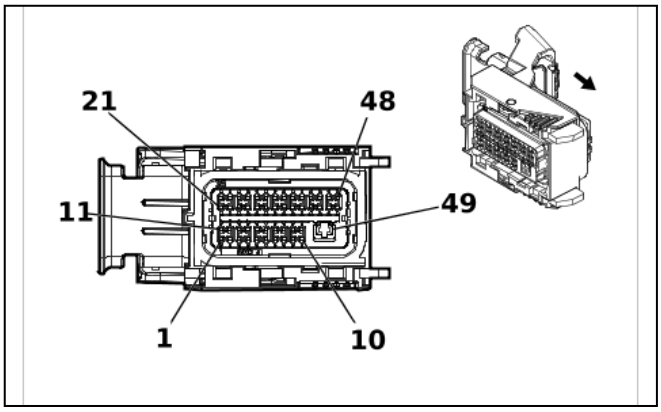

5663663

Connector Part Information

- Harness Type: Engine Wiring Harness
- OEM Connector: 216744-0003
- Service Connector: 85669159
- Description: 49-Way F 0.64, 2.8 Series, Sealed(BK with BU Terminal Position Assurance)

Terminal Part Information

Terminal Type ID	Terminated Lead	Diagnostic Test Probe	Terminal Removal Tool
I	13587518	J-35616-35 (VT)	J-38125-11A
II	19351723	J-35616-64B (L-BU)	J-38125-213

K20 Engine Control Module X1 (L84 / L87)

Pin	Size	Color	Circuit	Function	Terminal Type ID	Option
(1) 1	(1) 0.5	(1) GN / WH	(1) 492	(1) Mass Air Flow Sensor Signal	(1) II	(1) —
2	—	—	—	Not Occupied	—	—
(3) 3	(3) 0.5	(3) BU / GY	(3) 4054	(3) Private Serial Data Powertrain CAN Bus [-] Serial Data	(3) II	(3) —
4	—	—	—	Not Occupied	—	—
(5) 5	(5) 0.5	(5) WH	(5) 4976	(5) AUTOSAR CAN Bus [-] 3 Serial Data	(5) II	(5) —
6	—	—	—	Not Occupied	—	—
(7) 7	(7) 0.5	(7) WH	(7) 4978	(7) AUTOSAR CAN Bus [-] 2 Serial Data	(7) II	(7) —
8	—	—	—	Not Occupied	—	—
(9) 9	(9) 0.5	(9) YE	(9) 5991	(9) Powertrain Relay Coil Control	(9) II	(9) —
10	—	—	—	Not Occupied	—	—
(11) 11	(11) 0.5	(11) YE	(11) 4063	(11) Hood Status A Signal	(11) II	(11) —
(12) 12	(12) 0.5	(12) BU / GY	(12) 636	(12) Ambient Air Temperature Sensor Signal	(12) II	(12) —
(13) 13	(13) 0.5	(13) WH	(13) 4055	(13) Private Serial Data Powertrain CAN Bus [+] Serial Data	(13) II	(13) —
(14) 14	(14) 0.5	(14) WH / GN	(14) 5380	(14) Brake Position Sensor Signal	(14) II	(14) —
(15) 15	(15) 0.5	(15) BU / BK	(15) 4977	(15) AUTOSAR CAN Bus [+] 3 Serial Data	(15) II	(15) —

Pin	Size	Color	Circuit	Function	Terminal Type ID	Option
16	—	—	—	Not Occupied	—	—
(17) 17	(17) 0.5	(17) BU / YE	(17) 4979	(17) AUTOSAR CAN Bus [+] 2 Serial Data	(17) II	(17) —
(18) 18	(18) 0.5	(18) WH / GY	(18) 459	(18) Air Conditioning Compressor Clutch Relay Control	(18) II	(18) —
19 - 20	—	—	—	Not Occupied	—	—
(21) 21	(21) 0.75	(21) GN / BU	(21) 428	(21) EVAP Canister Purge Solenoid Control	(21) II	(21) —
22	—	—	—	Not Occupied	—	—
(23) 23	(23) 0.5	(23) BK / GN	(23) 580	(23) Engine Control Sensors Low Reference 2	(23) II	(23) —
(24) 24	(24) 0.5	(24) BK / BU	(24) 1271	(24) Accelerator Pedal Position Low Reference 1	(24) II	(24) —
25 - 27	—	—	—	Not Occupied	—	—
(28) 28	(28) 0.5	(28) BN / GN	(28) 1174	(28) Oil Level Switch Signal	(28) II	(28) —
29	—	—	—	Not Occupied	—	—
(30) 30	(30) 0.5	(30) BK / VT	(30) 1272	(30) Accelerator Pedal Position Low Reference 2	(30) II	(30) —
31	—	—	—	Not Occupied	—	—
(32) 32	(32) 0.75	(32) VT / BU	(32) 5291	(32) Powertrain Main Relay Fused Supply Voltage 2	(32) II	(32) —
33	—	—	—	Not Occupied	—	—
(34) 34	(34) 0.5	(34) RD / BN	(34) 440	(34) Battery Positive Voltage	(34) II	(34) —
35	—	—	—	Not Occupied	—	—
(36) 36	(36) 0.5	(36) YE / BK	(36) 625	(36) Starter Enable Relay Control	(36) II	(36) —
(37) 37	(37) 0.5	(37) GN / GY	(37) 465	(37) Fuel Pump Primary Relay Control	(37) II	(37) —
(38) 38	(38) 0.5	(38) WH / RD	(38) 1164	(38) Accelerator Pedal Position 5V Reference 1	(38) II	(38) —
(39) 39	(39) 0.5	(39) YE / WH	(39) 1161	(39) Accelerator Pedal Position Signal 1	(39) II	(39) —
(40) 40	(40) 0.5	(40) YE / BN	(40) 331	(40) Oil Pressure Sensor Signal	(40) II	(40) —
(41) 41	(41) 0.5	(41) GN	(41) 380	(41) Air Conditioning Refrigerant Pressure Sensor Signal	(41) II	(41) —
42 - 43	—	—	—	Not Occupied	—	—
(44) 44	(44) 0.5	(44) GN / WH	(44) 1162	(44) Accelerator Pedal Position Signal 2	(44) II	(44) —
(45) 45	(45) 0.5	(45) BN / RD	(45) 1274	(45) Accelerator Pedal Position 5V Reference 2	(45) II	(45) —
46	—	—	—	Not Occupied	—	—
(47) 47	(47) 0.75	(47) VT / GN	(47) 439	(47) Run/Crank Ignition 1 Voltage	(47) II	(47) —
(48) 48	(48) 0.75	(48) VT / BU	(48) 5290	(48) Powertrain Main Relay Fused Supply Voltage 1	(48) II	(48) —
(49) 49	(49) 2	(49) VT	(49) 5290	(49) Powertrain Main Relay Fused Supply Voltage 1	(49) I	(49) —

K20 Engine Control Module X1 (LZ0)

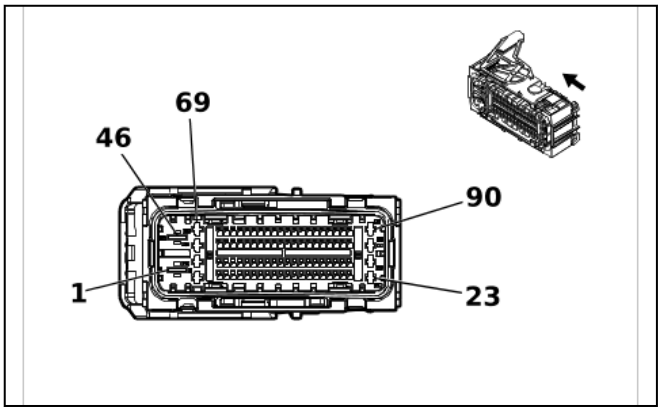

5492269

Connector Part Information

- Harness Type: Engine Wiring Harness
- OEM Connector: 12699571
- Service Connector: 84941451
- Description: 90-Way F 0.64 GEN-Y, 2.8, 6.3 MCP Series, Sealed(BK with BU Terminal Position Assurance)

Terminal Part Information

Terminal Type ID	Terminated Lead	Diagnostic Test Probe	Terminal Removal Tool
I	19367373	J-35616-64B (L-BU)	J-38125-215A
II	19371214	J-35616-35 (VT)	J-38125-556
III	84616649	J-35616-42 (RD)	J-38125-556

K20 Engine Control Module X1 (LZ0)

Pin	Size	Color	Circuit	Function	Terminal Type ID	Option
(1) 1	(1) 6	(1) BN / BU	(1) 104	(1) Glow Plug Control	(1) III	(1) —
(2) 2	(2) 2.5	(2) GY / YE	(2) 1584	(2) Glow Plug 4 Control	(2) II	(2) —
3 - 5	—	—	—	Not Occupied	—	—
(6) 6	(6) 0.5	(6) WH / GY	(6) 459	(6) Air Conditioning Compressor Clutch Relay Control	(6) I	(6) —
(7) 7	(7) 0.75	(7) RD / BN	(7) 440	(7) Battery Positive Voltage	(7) I	(7) —
(8) 8	(8) 0.5	(8) GN / WH	(8) 492	(8) Mass Air Flow Sensor Signal	(8) I	(8) —
9 - 10	—	—	—	Not Occupied	—	—
(11) 11	(11) 0.5	(11) GY	(11) 2973	(11) Coolant Flow Control Valve Position Signal	(11) I	(11) —
(12) 12	(12) 0.5	(12) GN / GY	(12) 7316	(12) Intake Manifold Runner Valve Actuator Control	(12) I	(12) —
(13) 13	(13) 0.5	(13) GN	(13) 10289	(13) Exhaust Gas Temperature Sensor SENT 1 Signal	(13) I	(13) —
(14) 14	(14) 0.5	(14) BU	(14) 10290	(14) Exhaust Gas Temperature Sensor SENT 2 Signal	(14) I	(14) —
(15) 15	(15) 0.5	(15) BN / GN	(15) 4305	(15) Exhaust Flow Control Valve 1	(15) I	(15) —

Pin	Size	Color	Circuit	Function	Terminal Type ID	Option
(16) 16	(16) 0.5	(16) WH	(16) 4055	(16) Private Serial Data Powertrain CAN Bus [+] Serial Data	(16) I	(16) —
(17) 17	(17) 0.5	(17) BU / BK	(17) 4977	(17) AUTOSAR CAN Bus [+] 3 Serial Data	(17) I	(17) —
(18) 18	(18) 0.5	(18) BU / YE	(18) 4979	(18) AUTOSAR CAN Bus [+] 2 Serial Data	(18) I	(18) —
(19) 19	(19) 0.5	(19) BK / GN	(19) 580	(19) Engine Control Sensors Low Reference 2	(19) I	(19) —
20	—	—	—	Not Occupied	—	—
(21) 21	(21) 0.75	(21) GY / BK	(21) 1330	(21) Variable Geometry Turbocharger Position Sensor Motor Close Control	(21) I	(21) —
(22) 22	(22) 0.75	(22) WH / BN	(22) 1313	(22) Variable Geometry Turbocharger Position Sensor Motor Open Control	(22) I	(22) —
(23) 23	(23) 2.5	(23) GY / GN	(23) 1583	(23) Glow Plug 3 Control	(23) II	(23) —
(24) 24	(24) 2.5	(24) GY / BN	(24) 1582	(24) Glow Plug 2 Control	(24) II	(24) —
(25) 25	(25) 0.75	(25) VT / GN	(25) 439	(25) Run/Crank Ignition 1 Voltage	(25) I	(25) —
(26) 26	(26) 0.5	(26) YE	(26) 5991	(26) Powertrain Relay Coil Control	(26) I	(26) —
27	—	—	—	Not Occupied	—	—
(28) 28	(28) 0.5	(28) GN / BN	(28) 507	(28) Wait To Start Indicator Control	(28) I	(28) —
29	—	—	—	Not Occupied	—	—
(30) 30	(30) 0.5	(30) BK / GY	(30) 626	(30) Engine Control Vehicle Sensors Low Reference 1	(30) I	(30) —
31 - 32	—	—	—	Not Occupied	—	—
(33) 33	(33) 0.5	(33) WH / BN	(33) 2363	(33) Exhaust Pressure Sensor SENT 1 Signal	(33) I	(33) —
(34) 34	(34) 0.5	(34) VT / YE	(34) 5947	(34) Turbocharger Vane Position Sensor Signal	(34) I	(34) —
(35) 35	(35) 0.5	(35) BN / WH	(35) 5763	(35) Exhaust Gas Recirculation Position Signal	(35) I	(35) —
(36) 36	(36) 0.5	(36) BU / GY	(36) 2978	(36) Coolant Diverter Valve Position Signal	(36) I	(36) —
(37) 37	(37) 0.5	(37) GN	(37) 10478	(37) Low Pressure Exhaust Gas Recirculation Sensor SENT Signal	(37) I	(37) —
(38) 38	(38) 0.5	(38) BU / GY	(38) 4054	(38) Private Serial Data Powertrain CAN Bus [-] Serial Data	(38) I	(38) —
(39) 39	(39) 0.5	(39) WH	(39) 4976	(39) AUTOSAR CAN Bus [-] 3 Serial Data	(39) I	(39) —
(40) 40	(40) 0.5	(40) WH	(40) 4978	(40) AUTOSAR CAN Bus [-] 2 Serial Data	(40) I	(40) —
41	—	—	—	Not Occupied	—	—
(42) 42	(42) 0.5	(42) YE / BK	(42) 625	(42) Starter Enable Relay Control	(42) I	(42) —
(43) 43	(43) 0.75	(43) VT / BK	(43) 5746	(43) Exhaust Gas Recirculation Valve Low Control	(43) I	(43) —
(44) 44	(44) 0.75	(44) WH / VT	(44) 5764	(44) Exhaust Gas Recirculation Valve High Control	(44) I	(44) —
(45) 45	(45) 2.5	(45) GY / WH	(45) 1585	(45) Glow Plug 5 Control	(45) II	(45) —

Pin	Size	Color	Circuit	Function	Terminal Type ID	Option
(46) 46	(46) 5	(46) BK / WH	(46) 6151	(46) Engine Control Module Ground	(46) III	(46) —
(47) 47	(47) 2.5	(47) GY / VT	(47) 1586	(47) Glow Plug 6 Control	(47) II	(47) —
(48) 48	(48) 0.5	(48) WH / RD	(48) 480	(48) Engine Control Vehicle Sensors 5 Volt Reference 1	(48) I	(48) —
(49) 49	(49) 0.5	(49) GN / WH	(49) 1162	(49) Accelerator Pedal Position Signal 2	(49) I	(49) —
(50) 50	(50) 0.5	(50) BK / VT	(50) 1272	(50) Accelerator Pedal Position Low Reference 2	(50) I	(50) —
(51) 51	(51) 0.5	(51) BK / BU	(51) 1271	(51) Accelerator Pedal Position Low Reference 1	(51) I	(51) —
(52) 52	(52) 0.5	(52) WH / GN	(52) 5380	(52) Brake Position Sensor Signal	(52) I	(52) —
53 - 54	—	—	—	Not Occupied	—	—
(55) 55	(55) 0.5	(55) YE	(55) 4063	(55) Hood Status A Signal	(55) I	(55) —
56 - 58	—	—	—	Not Occupied	—	—
(59) 59	(59) 0.5	(59) GN	(59) 380	(59) Air Conditioning Refrigerant Pressure Sensor Signal	(59) I	(59) —
(60) 60	(60) 0.5	(60) YE / BN	(60) 331	(60) Oil Pressure Sensor Signal	(60) I	(60) —
(61) 61	(61) 0.5	(61) YE / GY	(61) 3926	(61) Crankcase Differential Pressure Sensor Signal	(61) I	(61) —
62 - 63	—	—	—	Not Occupied	—	—
(64) 64	(64) 0.5	(64) GN / BU	(64) 3889	(64) Powertrain Sensor Bus Relay Control	(64) I	(64) —
65	—	—	—	Not Occupied	—	—
(66) 66	(66) 0.75	(66) BN	(66) 1421	(66) Exhaust Restrictor Motor Closed Control	(66) I	(66) —
(67) 67	(67) 0.75	(67) YE / BN	(67) 1420	(67) Exhaust Restrictor Motor Open Control	(67) I	(67) —
(68) 68	(68) 2.5	(68) GY / BU	(68) 1581	(68) Glow Plug 1 Control	(68) II	(68) —
(69) 69	(69) 2.5	(69) VT / BU	(69) 5291	(69) Powertrain Main Relay Fused Supply Voltage 2	(69) II	(69) —
(70) 70	(70) 0.5	(70) BU / RD	(70) 460	(70) Engine Control Sensors 5 Volt Reference 1	(70) I	(70) —
(71) 71	(71) 0.5	(71) BN / RD	(71) 1274	(71) Accelerator Pedal Position 5V Reference 2	(71) I	(71) —
(72) 72	(72) 0.5	(72) WH / RD	(72) 1164	(72) Accelerator Pedal Position 5V Reference 1	(72) I	(72) —
(73) 73	(73) 0.5	(73) YE / WH	(73) 1161	(73) Accelerator Pedal Position Signal 1	(73) I	(73) —
(74) 74	(74) 0.5	(74) BU / GY	(74) 636	(74) Ambient Air Temperature Sensor Signal	(74) I	(74) —
(75) 75	(75) 0.5	(75) VT	(75) 7485	(75) Engine Oil Temperature Sensor 2 Signal	(75) I	(75) —
76 - 85	—	—	—	Not Occupied	—	—
(86) 86	(86) 0.5	(86) GN / GY	(86) 465	(86) Fuel Pump Primary Relay Control	(86) I	(86) —
(87) 87	(87) 0.75	(87) VT / BU	(87) 5294	(87) Powertrain Main Relay Fused Supply Voltage 5	(87) I	(87) —

Pin	Size	Color	Circuit	Function	Terminal Type ID	Option
(88) 88	(88) 0.75	(88) GY / BN	(88) 2972	(88) Coolant Flow Control Actuator Control Close	(88) I	(88) —
(89) 89	(89) 0.75	(89) GY / BU	(89) 2971	(89) Coolant Flow Control Actuator Control Open	(89) I	(89) —
(90) 90	(90) 2.5	(90) VT / BU	(90) 5290	(90) Powertrain Main Relay Fused Supply Voltage 1	(90) II	(90) —

K20 Engine Control Module X2 (L84 / L87)

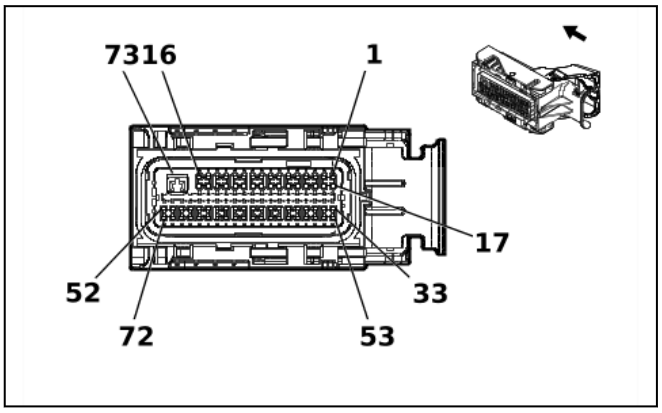

1673472

Connector Part Information

- Harness Type: Engine Wiring Harness
- OEM Connector: 216739-0001
- Service Connector: 85761019
- Description: 73-Way F 0.64, 2.8 Series, Sealed(BK with BK Terminal Position Assurance)

Terminal Part Information

Terminal Type ID	Terminated Lead	Diagnostic Test Probe	Terminal Removal Tool
I	13587518	J-35616-35 (VT)	J-38125-11A
II	19354746	J-35616-64B (L-BU)	J-38125-213

K20 Engine Control Module X2 (L84 / L87)

Pin	Size	Color	Circuit	Function	Terminal Type ID	Option
(1) 1	(1) 0.5	(1) GN / YE	(1) 3212	(1) HO2S Heater Low Control Bank 2 Sensor 1	(1) II	(1) —
(2) 2	(2) 0.5	(2) GY	(2) 5493	(2) Cylinder Deactivation Solenoid Valve Control 3	(2) II	(2) —
(3) 3	(3) 0.5	(3) BK / YE	(3) 548	(3) Engine Control Sensors Low Reference 1	(3) II	(3) —
4 - 6	—	—	—	Not Occupied	—	—
(7) 7	(7) 0.5	(7) GN / WH	(7) 4622	(7) Engine Control Module LIN Bus 2	(7) II	(7) —
(8) 8	(8) 0.75	(8) GN / VT	(8) 4621	(8) Engine Control Module LIN Bus 1	(8) II	(8) —
9 - 11	—	—	—	Not Occupied	—	—
(12) 12	(12) 0.5	(12) YE / BU	(12) 2124	(12) Ignition Control 4	(12) II	(12) —

Pin	Size	Color	Circuit	Function	Terminal Type ID	Option
(13) 13	(13) 0.5	(13) BN / BU	(13) 2126	(13) Ignition Control 6	(13) II	(13) —
(14) 14	(14) 0.5	(14) VT / BU	(14) 5294	(14) Powertrain Main Relay Fused Supply Voltage 5	(14) II	(14) —
(15) 15	(15) 0.5	(15) VT / BU	(15) 5294	(15) Powertrain Main Relay Fused Supply Voltage 5	(15) II	(15) —
(16) 16	(16) 0.5	(16) VT / BU	(16) 5294	(16) Powertrain Main Relay Fused Supply Voltage 5	(16) II	(16) —
(17) 17	(17) 0.5	(17) GY / WH	(17) 3113	(17) HO2S Heater Low Control Bank 1 Sensor 1	(17) II	(17) —
(18) 18	(18) 0.5	(18) YE / GY	(18) 2493	(18) Cylinder Shutoff Solenoid Enable Signal 3	(18) II	(18) —
19 - 21	—	—	—	Not Occupied	—	—
(22) 22	(22) 0.5	(22) GN	(22) 6935	(22) HO2S Pump Current Trim Signal	(22) II	(22) —
(23) 23	(23) 0.5	(23) BN / WH	(23) 6933	(23) HO2S Pump Current Signal	(23) II	(23) —
(24) 24	(24) 0.5	(24) BN	(24) 6934	(24) HO2S Ground	(24) II	(24) —
(25) 25	(25) 0.5	(25) YE / GY	(25) 6936	(25) HO2S Signal	(25) II	(25) —
26 - 27	—	—	—	Not Occupied	—	—
(28) 28	(28) 0.5	(28) GN / BU	(28) 2123	(28) Ignition Control 3	(28) II	(28) —
(29) 29	(29) 0.5	(29) BU / GY	(29) 2125	(29) Ignition Control 5	(29) II	(29) —
(30) 30	(30) 0.75	(30) BK / GY	(30) 2130	(30) Ignition Control Low Reference Bank 2	(30) II	(30) —
(31) 31	(31) 0.5	(31) BN	(31) 5496	(31) Cylinder Deactivation Solenoid Valve Control 6	(31) II	(31) —
(32) 32	(32) 0.5	(32) YE / BN	(32) 2496	(32) Cylinder Shutoff Solenoid Enable Signal 6	(32) II	(32) —
(33) 33	(33) 0.75	(33) WH / BN	(33) 3223	(33) HO2S Heater Low Control Bank 2 Sensor 2	(33) II	(33) —
34	—	—	—	Not Occupied	—	—
(35) 35	(35) 0.5	(35) BU	(35) 179	(35) Engine Oil Pump Control	(35) II	(35) —
(36) 36	(36) 0.5	(36) YE / GN	(36) 2494	(36) Cylinder Shutoff Solenoid Enable Signal 4	(36) II	(36) —
(37) 37	(37) 0.75	(37) VT / BU	(37) 5294	(37) Powertrain Main Relay Fused Supply Voltage 5	(37) II	(37) —
38	—	—	—	Not Occupied	—	—
(39) 39	(39) 0.5	(39) WH / RD	(39) 480	(39) Engine Control Vehicle Sensors 5 Volt Reference 1	(39) II	(39) —
40 - 45	—	—	—	Not Occupied	—	—
(46) 46	(46) 0.5	(46) YE / BU	(46) 3221	(46) HO2S Low Signal Bank 2 Sensor 2	(46) II	(46) —
(47) 47	(47) 0.5	(47) VT / GN	(47) 3220	(47) HO2S High Signal Bank 2 Sensor 2	(47) II	(47) —
(48) 48	(48) 0.5	(48) BU	(48) 2572	(48) Heated Oxygen Sensor 2 Current Adjust Signal	(48) II	(48) —
(49) 49	(49) 0.5	(49) YE / WH	(49) 2570	(49) Heated Oxygen Sensor 2 Pump Current Signal	(49) II	(49) —

Pin	Size	Color	Circuit	Function	Terminal Type ID	Option
(50) 50	(50) 0.75	(50) BK / GY	(50) 2303	(50) Knock Sensor Low Reference 2	(50) II	(50) —
(51) 51	(51) 0.75	(51) BK / YE	(51) 1716	(51) Knock Sensor Low Reference 1	(51) II	(51) —
(52) 52	(52) 0.5	(52) BN / WH	(52) 582	(52) Throttle Actuator Close Control	(52) II	(52) —
(53) 53	(53) 0.75	(53) GY / WH	(53) 3122	(53) HO2S Heater Low Control Bank 1 Sensor 2	(53) II	(53) —
(54) 54	(54) 0.5	(54) VT	(54) 5495	(54) Cylinder Deactivation Solenoid Valve Control 5	(54) II	(54) —
(55) 55	(55) 0.5	(55) WH / VT	(55) 2495	(55) Cylinder Shutoff Solenoid Enable Signal 5	(55) II	(55) —
(56) 56	(56) 0.5	(56) YE / BU	(56) 5494	(56) Cylinder Deactivation Solenoid Valve Control 4	(56) II	(56) —
(57) 57	(57) 0.5	(57) GN	(57) 5492	(57) Cylinder Deactivation Solenoid Valve Control 2	(57) II	(57) —
(58) 58	(58) 0.5	(58) WH / GN	(58) 2492	(58) Cylinder Shutoff Solenoid Enable Signal 2	(58) II	(58) —
(59) 59	(59) 0.5	(59) BU / RD	(59) 460	(59) Engine Control Sensors 5 Volt Reference 1	(59) II	(59) —
60 - 65	—	—	—	Not Occupied	—	—
(66) 66	(66) 0.5	(66) WH / YE	(66) 3121	(66) HO2S Low Signal Bank 1 Sensor 2	(66) II	(66) —
(67) 67	(67) 0.5	(67) VT / BU	(67) 3120	(67) HO2S High Signal Bank 1 Sensor 2	(67) II	(67) —
(68) 68	(68) 0.5	(68) WH	(68) 2571	(68) Heated Oxygen Sensor 2 Common Bank 2 Sensor 1 Signal	(68) II	(68) —
(69) 69	(69) 0.5	(69) BN / GY	(69) 2573	(69) Heated Oxygen Sensor 2 Collector Signal	(69) II	(69) —
(70) 70	(70) 0.75	(70) WH / GY	(70) 1876	(70) Knock Sensor 2 Signal	(70) II	(70) —
(71) 71	(71) 0.75	(71) VT / GY	(71) 496	(71) Knock Sensor 1 Signal	(71) II	(71) —
(72) 72	(72) 0.5	(72) YE	(72) 581	(72) Throttle Actuator Open Control	(72) II	(72) —
(73) 73	(73) 2.5	(73) BK / WH	(73) 6151	(73) Engine Control Module Ground	(73) I	(73) —

K20 Engine Control Module X2 (LZ0)

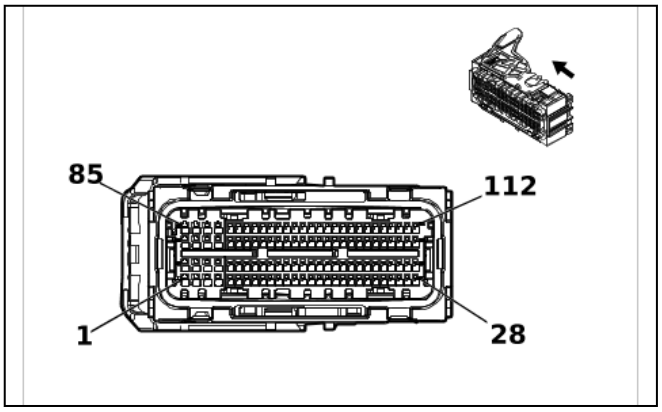

5491584

Connector Part Information

- Harness Type: Engine Wiring Harness
- OEM Connector: 12699573
- Service Connector: 84941452
- Description: 112-Way F 0.64 GEN-Y, 1.2 MCON Series, Sealed(BK with BK Terminal Position Assurance)

Terminal Part Information

Terminal Type ID	Terminated Lead	Diagnostic Test Probe	Terminal Removal Tool
I	19367373	J-35616-64B (L-BU)	J-38125-215A
II	84963773	J-35616-12 (BU)	J-38125-215A

K20 Engine Control Module X2 (LZ0)

Pin	Size	Color	Circuit	Function	Terminal Type ID	Option
(1) 1	(1) 1.5	(1) GN	(1) 4803	(1) Direct Fuel Injector High Voltage Control Cylinder 3	(1) II	(1) —
(2) 2	(2) 1.5	(2) GY / BU	(2) 4804	(2) Direct Fuel Injector High Voltage Control Cylinder 4	(2) II	(2) —
(3) 3	(3) 0.75	(3) YE	(3) 2420	(3) Fuel High Pressure Pump Low Enable Signal	(3) II	(3) —
(4) 4	(4) 0.75	(4) YE / VT	(4) 7245	(4) High Pressure Fuel Pump Low Enable Signal	(4) II	(4) —
(5) 5	(5) 0.5	(5) GY / YE	(5) 5297	(5) Exhaust Camshaft Position Sensor 1 Voltage Reference	(5) I	(5) —
(6) 6	(6) 0.5	(6) GN	(6) 6271	(6) Crankshaft Position Sensor Signal	(6) I	(6) —
(7) 7	(7) 0.5	(7) VT / BU	(7) 6270	(7) Crankshaft Position Sensor Voltage	(7) I	(7) —
8	—	—	—	Not Occupied	—	—
(9) 9	(9) 0.5	(9) BN	(9) 25	(9) Charge Indicator Control	(9) I	(9) —
(10) 10	(10) 0.75	(10) BU / YE	(10) 11616	(10) Diesel Exhaust Fluid Dosing Valve Low Control 2	(10) I	(10) —
(11) 11	(11) 0.5	(11) BK / GN	(11) 3235	(11) Exhaust Gas Recirculation Temperature Sensor 3 Low Reference	(11) I	(11) —
(12) 12	(12) 0.5	(12) YE / BU	(12) 3680	(12) Charge Air Cooler Outlet Temperature Sensor Low Reference	(12) I	(12) —
(13) 13	(13) 0.5	(13) YE / BK	(13) 3682	(13) Charge Air Cooler Inlet Temperature Sensor Low Reference	(13) I	(13) —
14 - 22	—	—	—	Not Occupied	—	—

Pin	Size	Color	Circuit	Function	Terminal Type ID	Option
(23) 23	(23) 0.75	(23) BN / WH	(23) 3100	(23) Diesel Exhaust Fluid Dosing Valve Low Control	(23) I	(23) —
(24) 24	(24) 0.5	(24) BK / YE	(24) 2834	(24) Fuel Rail Pressure Solenoid Valve Low Control	(24) I	(24) —
(25) 25	(25) 0.5	(25) BU	(25) 179	(25) Engine Oil Pump Control	(25) I	(25) —
26	—	—	—	Not Occupied	—	—
(27) 27	(27) 0.75	(27) BN / WH	(27) 582	(27) Throttle Actuator Close Control	(27) I	(27) —
(28) 28	(28) 0.75	(28) YE	(28) 581	(28) Throttle Actuator Open Control	(28) I	(28) —
(29) 29	(29) 1.5	(29) GN / GY	(29) 4903	(29) Direct Fuel Injector High Voltage Supply Cylinder 3	(29) II	(29) —
(30) 30	(30) 1.5	(30) BU / WH	(30) 4904	(30) Direct Fuel Injector High Voltage Supply Cylinder 4	(30) II	(30) —
(31) 31	(31) 0.75	(31) GY	(31) 2419	(31) Fuel High Pressure Pump High Side Supply Voltage	(31) II	(31) —
(32) 32	(32) 0.75	(32) GY / BN	(32) 7244	(32) High Pressure Fuel Pump High Side Control	(32) II	(32) —
(33) 33	(33) 0.5	(33) BK / GY	(33) 5296	(33) Exhaust Camshaft Position Sensor Low Reference 1	(33) I	(33) —
(34) 34	(34) 0.5	(34) VT / BK	(34) 5273	(34) Exhaust Camshaft Position Sensor 1	(34) I	(34) —
(35) 35	(35) 0.5	(35) BK / VT	(35) 6272	(35) Crankshaft Position Sensor Low Reference	(35) I	(35) —
36	—	—	—	Not Occupied	—	—
(37) 37	(37) 0.5	(37) BU	(37) 3017	(37) Fuel Heater Relay 1 Control	(37) I	(37) —
38	—	—	—	Not Occupied	—	—
(39) 39	(39) 0.5	(39) WH / GY	(39) 3234	(39) Exhaust Gas Recirculation Temperature Sensor 3 Signal	(39) I	(39) —
(40) 40	(40) 0.5	(40) BN	(40) 3681	(40) Charge Air Cooler Outlet Temperature Sensor Signal	(40) I	(40) —
(41) 41	(41) 0.5	(41) GN	(41) 3683	(41) Charge Air Cooler Inlet Temperature Sensor Signal	(41) I	(41) —
42 - 48	—	—	—	Not Occupied	—	—
(49) 49	(49) 0.75	(49) BU	(49) 11615	(49) Diesel Exhaust Fluid Dosing Valve High Control 2	(49) I	(49) —
50	—	—	—	Not Occupied	—	—
(51) 51	(51) 0.75	(51) BN	(51) 3099	(51) Diesel Exhaust Fluid Dosing Valve High Control	(51) I	(51) —
(52) 52	(52) 0.5	(52) BU / WH	(52) 2530	(52) Fuel Rail Pressure Solenoid Valve Control	(52) I	(52) —
(53) 53	(53) 0.5	(53) YE / BN	(53) 106	(53) Oil Pump Motor Control	(53) I	(53) —
54	—	—	—	Not Occupied	—	—
(55) 55	(55) 0.75	(55) BK / BU	(55) 1408	(55) Variable Swirl Valve Close Control	(55) I	(55) —
(56) 56	(56) 0.75	(56) BK / GN	(56) 1389	(56) Variable Swirl Valve Open Control	(56) I	(56) —
(57) 57	(57) 1.5	(57) VT / GY	(57) 4906	(57) Direct Fuel Injector High Voltage Supply Cylinder 6	(57) II	(57) —

Pin	Size	Color	Circuit	Function	Terminal Type ID	Option
(58) 58	(58) 1.5	(58) BN / WH	(58) 4901	(58) Direct Fuel Injector High Voltage Supply Cylinder 1	(58) II	(58) —
(59) 59	(59) 1.5	(59) GN / WH	(59) 4905	(59) Direct Fuel Injector High Voltage Supply Cylinder 5	(59) II	(59) —
(60) 60	(60) 1.5	(60) BU / GY	(60) 4902	(60) Direct Fuel Injector High Voltage Supply Cylinder 2	(60) II	(60) —
61 - 62	—	—	—	Not Occupied	—	—
(63) 63	(63) 0.5	(63) BN	(63) 10515	(63) Electronic Transmission Range Select Shifter Position Sensor 1 Signal	(63) I	(63) —
(64) 64	(64) 0.5	(64) GY	(64) 10518	(64) Electronic Transmission Range Select Shifter Position Sensor 2 Signal	(64) I	(64) —
65	—	—	—	Not Occupied	—	—
(66) 66	(66) 0.5	(66) BN / RD	(66) 2917	(66) Fuel Rail Pressure Sensor 5V Reference	(66) I	(66) —
(67) 67	(67) 0.5	(67) BK / GN	(67) 2919	(67) Fuel Rail Pressure Sensor Low Reference	(67) I	(67) —
68	—	—	—	Not Occupied	—	—
(69) 69	(69) 0.5	(69) BN / BU	(69) 357	(69) Oil Temperature Sensor Signal	(69) I	(69) —
(70) 70	(70) 0.5	(70) YE / BK	(70) 3000	(70) Coolant Temperature Sensor 2 Signal	(70) I	(70) —
71 - 72	—	—	—	Not Occupied	—	—
(73) 73	(73) 0.5	(73) WH / BU	(73) 7329	(73) Pre-Throttle Air Temperature Signal	(73) I	(73) —
74	—	—	—	Not Occupied	—	—
(75) 75	(75) 0.5	(75) BK / YE	(75) 548	(75) Engine Control Sensors Low Reference 1	(75) I	(75) —
(76) 76	(76) 0.75	(76) GN / VT	(76) 4621	(76) Engine Control Module LIN Bus 1	(76) I	(76) —
(77) 77	(77) 0.5	(77) GN / WH	(77) 4622	(77) Engine Control Module LIN Bus 2	(77) I	(77) —
(78) 78	(78) 0.5	(78) GN / YE	(78) 4623	(78) Engine Control Module LIN Bus 3	(78) I	(78) —
79 - 82	—	—	—	Not Occupied	—	—
(83) 83	(83) 0.75	(83) BU / BN	(83) 2977	(83) Coolant Diverter Valve Actuator Control Close	(83) I	(83) —
(84) 84	(84) 0.75	(84) BU	(84) 2976	(84) Coolant Diverter Valve Actuator Control Open	(84) I	(84) —
(85) 85	(85) 1.5	(85) VT / GN	(85) 4806	(85) Direct Fuel Injector High Voltage Control Cylinder 6	(85) II	(85) —
(86) 86	(86) 1.5	(86) BN	(86) 4801	(86) Direct Fuel Injector High Voltage Control Cylinder 1	(86) II	(86) —
(87) 87	(87) 1.5	(87) BU	(87) 4802	(87) Direct Fuel Injector High Voltage Control Cylinder 2	(87) II	(87) —
(88) 88	(88) 1.5	(88) WH / GN	(88) 4805	(88) Direct Fuel Injector High Voltage Control Cylinder 5	(88) II	(88) —
89	—	—	—	Not Occupied	—	—
(90) 90	(90) 0.5	(90) BU / WH	(90) 3630	(90) Throttle Position Sensor SENT 1 Signal	(90) I	(90) —
(91) 91	(91) 0.5	(91) BU / GN	(91) 4012	(91) Exhaust Gas Recirculation 2 Valve Position Sensor Signal	(91) I	(91) —

Pin	Size	Color	Circuit	Function	Terminal Type ID	Option
(92) 92	(92) 0.5	(92) GY	(92) 23	(92) Generator Field Duty Cycle Signal	(92) I	(92) —
93	—	—	—	Not Occupied	—	—
(94) 94	(94) 0.5	(94) BU / WH	(94) 2918	(94) Fuel Rail Pressure Sensor Signal	(94) I	(94) —
(95) 95	(95) 0.5	(95) YE / BU	(95) 2408	(95) Engine Inlet Coolant Temperature Signal	(95) I	(95) —
(96) 96	(96) 0.5	(96) BN / YE	(96) 2161	(96) Fuel Rail Pressure Sensor 2 Signal	(96) I	(96) —
(97) 97	(97) 0.5	(97) VT	(97) 2988	(97) Engine Outlet Coolant Temperature Signal	(97) I	(97) —
98 - 100	—	—	—	Not Occupied	—	—
(101) 101	(101) 0.5	(101) GN / WH	(101) 432	(101) Manifold Absolute Pressure Sensor Signal	(101) I	(101) —
(102) 102	(102) 0.5	(102) GN / YE	(102) 37	(102) Engine Block Temperature Sensor Signal	(102) I	(102) —
(103) 103	(103) 0.5	(103) BU / BK	(103) 1422	(103) Engine Water Charge Air Coolant Temperature Signal	(103) I	(103) —
104 - 110	—	—	—	Not Occupied	—	—
(111) 111	(111) 0.75	(111) BU / BN	(111) 4013	(111) Exhaust Gas Recirculation 2 Valve Close Control	(111) I	(111) —
(112) 112	(112) 0.75	(112) BU / WH	(112) 4014	(112) Exhaust Gas Recirculation 2 Valve Open Control	(112) I	(112) —

K20 Engine Control Module X3 (L84 / L87)

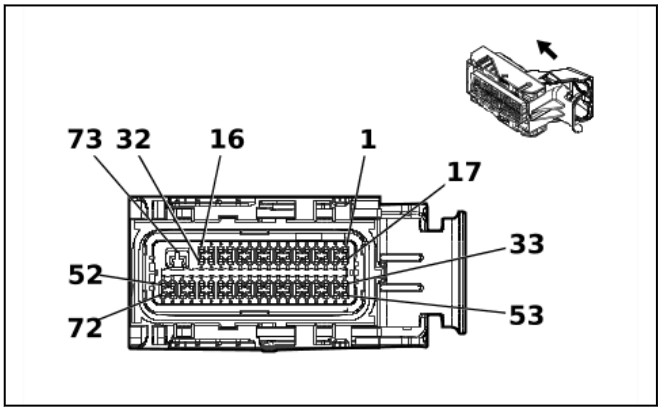

1650395

Connector Part Information

- Harness Type: Engine Wiring Harness
- OEM Connector: 216739-0002
- Service Connector: 85761016
- Description: 73-Way F 0.64, 2.8 Series, Sealed(BK with GY Terminal Position Assurance)

Terminal Part Information

Terminal Type ID	Terminated Lead	Diagnostic Test Probe	Terminal Removal Tool
I	13587518	J-35616-35 (VT)	J-38125-11A
II	19354746	J-35616-64B (L-BU)	J-38125-213

K20 Engine Control Module X3 (L84 / L87)

Pin	Size	Color	Circuit	Function	Terminal Type ID	Option
(1) 1	(1) 0.5	(1) WH	(1) 5497	(1) Cylinder Deactivation Solenoid Valve Control 7	(1) II	(1) —
(2) 2	(2) 0.5	(2) GN / GY	(2) 2497	(2) Cylinder Shutoff Solenoid Enable Signal 7	(2) II	(2) —
3 - 4	—	—	—	Not Occupied	—	—
(5) 5	(5) 0.5	(5) VT / BN	(5) 5284	(5) Intake Camshaft Position Actuator Solenoid Valve 1	(5) II	(5) —
(6) 6	(6) 0.5	(6) VT / GN	(6) 4320	(6) Powertrain Sensor Bus Enable	(6) II	(6) —
7	—	—	—	Not Occupied	—	—
(8) 8	(8) 0.5	(8) YE / VT	(8) 5275	(8) Intake Camshaft Position Sensor 1	(8) II	(8) —
(9) 9	(9) 0.5	(9) GY / BU	(9) 5300	(9) Intake Camshaft Position Sensor 1 Voltage Reference	(9) II	(9) —
(10) 10	(10) 0.5	(10) GN	(10) 6271	(10) Crankshaft Position Sensor Signal	(10) II	(10) —
11	—	—	—	Not Occupied	—	—
(12) 12	(12) 0.75	(12) BU / WH	(12) 2122	(12) Ignition Control 2	(12) II	(12) —
(13) 13	(13) 0.5	(13) VT / WH	(13) 2128	(13) Ignition Control 8	(13) II	(13) —
(14) 14	(14) 0.5	(14) BN	(14) 25	(14) Charge Indicator Control	(14) II	(14) —
15	—	—	—	Not Occupied	—	—
(16) 16	(16) 0.75	(16) YE	(16) 7301	(16) High Pressure Fuel Pump High Control	(16) II	(16) —
17 - 20	—	—	—	Not Occupied	—	—
(21) 21	(21) 0.5	(21) BK / BN	(21) 6753	(21) Camshaft Position Actuator Solenoid Valve 1 Low Reference	(21) II	(21) —
22 - 23	—	—	—	Not Occupied	—	—
(24) 24	(24) 0.5	(24) BK / GN	(24) 5301	(24) Intake Camshaft Position Sensor Low Reference 1	(24) II	(24) —
(25) 25	(25) 0.5	(25) VT / BU	(25) 6270	(25) Crankshaft Position Sensor Voltage	(25) II	(25) —
(26) 26	(26) 0.5	(26) BK / VT	(26) 6272	(26) Crankshaft Position Sensor Low Reference	(26) II	(26) —
27	—	—	—	Not Occupied	—	—
(28) 28	(28) 0.5	(28) GN / GY	(28) 2127	(28) Ignition Control 7	(28) II	(28) —
(29) 29	(29) 0.5	(29) BU / VT	(29) 2121	(29) Ignition Control 1	(29) II	(29) —
(30) 30	(30) 0.5	(30) BK / BU	(30) 2129	(30) Ignition Control Low Reference Bank 1	(30) II	(30) —
31	—	—	—	Not Occupied	—	—
(32) 32	(32) 0.75	(32) VT / BK	(32) 7300	(32) High Pressure Fuel Pump Low Control	(32) II	(32) —
(33) 33	(33) 0.5	(33) YE / VT	(33) 4325	(33) Starter Pinion Solenoid Actuator Relay Control	(33) II	(33) —
(34) 34	(34) 0.5	(34) WH / BU	(34) 2491	(34) Cylinder Shutoff Solenoid Enable Signal 1	(34) II	(34) —

Pin	Size	Color	Circuit	Function	Terminal Type ID	Option
(35) 35	(35) 0.5	(35) WH / YE	(35) 2498	(35) Cylinder Shutoff Solenoid Enable Signal 8	(35) II	(35) —
(36) 36	(36) 0.5	(36) BK / BN	(36) 2752	(36) Throttle Position Sensor Low Reference	(36) II	(36) —
(37) 37	(37) 0.5	(37) BK / GN	(37) 469	(37) Manifold Absolute Pressure Sensor Low Reference	(37) II	(37) —
38 - 39	—	—	—	Not Occupied	—	—
(40) 40	(40) 0.5	(40) BN / BU	(40) 357	(40) Oil Temperature Sensor Signal	(40) II	(40) —
41	—	—	—	Not Occupied	—	—
(42) 42	(42) 0.5	(42) BN	(42) 10515	(42) Electronic Transmission Range Select Shifter Position Sensor 1 Signal	(42) II	(42) —
(43) 43	(43) 0.5	(43) BK / GY	(43) 626	(43) Engine Control Vehicle Sensors Low Reference 1	(43) II	(43) —
(44) 44	(44) 0.75	(44) VT / BU	(44) 5292	(44) Powertrain Main Relay Fused Supply Voltage 3	(44) II	(44) —
(45) 45	(45) 0.75	(45) GN	(45) 4803	(45) Direct Fuel Injector High Voltage Control Cylinder 3	(45) II	(45) —
(46) 46	(46) 0.75	(46) GY / BU	(46) 4804	(46) Direct Fuel Injector High Voltage Control Cylinder 4	(46) II	(46) —
(47) 47	(47) 0.75	(47) WH / GN	(47) 4805	(47) Direct Fuel Injector High Voltage Control Cylinder 5	(47) II	(47) —
(48) 48	(48) 0.75	(48) VT / GN	(48) 4806	(48) Direct Fuel Injector High Voltage Control Cylinder 6	(48) II	(48) —
(49) 49	(49) 0.75	(49) BU	(49) 4802	(49) Direct Fuel Injector High Voltage Control Cylinder 2	(49) II	(49) —
(50) 50	(50) 0.75	(50) YE / GY	(50) 4807	(50) Direct Fuel Injector High Voltage Control Cylinder 7	(50) II	(50) —
(51) 51	(51) 0.75	(51) GY	(51) 4808	(51) Direct Fuel Injector High Voltage Control Cylinder 8	(51) II	(51) —
(52) 52	(52) 0.75	(52) BN	(52) 4801	(52) Direct Fuel Injector High Voltage Control Cylinder 1	(52) II	(52) —
(53) 53	(53) 0.5	(53) BU	(53) 5491	(53) Cylinder Deactivation Solenoid Valve Control 1	(53) II	(53) —
(54) 54	(54) 0.5	(54) YE	(54) 5498	(54) Cylinder Deactivation Solenoid Valve Control 8	(54) II	(54) —
(55) 55	(55) 0.5	(55) BN / RD	(55) 2701	(55) Throttle Position Sensor 5V Reference	(55) II	(55) —
(56) 56	(56) 0.5	(56) BU / WH	(56) 3630	(56) Throttle Position Sensor SENT 1 Signal	(56) II	(56) —
(57) 57	(57) 0.5	(57) GY / RD	(57) 2704	(57) Manifold Absolute Pressure Sensor 5V Reference	(57) II	(57) —
(58) 58	(58) 0.5	(58) GN / WH	(58) 432	(58) Manifold Absolute Pressure Sensor Signal	(58) II	(58) —
59 - 60	—	—	—	Not Occupied	—	—
(61) 61	(61) 0.5	(61) BU	(61) 410	(61) Engine Coolant Temperature Sensor Signal	(61) II	(61) —
(62) 62	(62) 0.5	(62) GY	(62) 10518	(62) Electronic Transmission Range Select Shifter Position Sensor 2 Signal	(62) II	(62) —
(63) 63	(63) 0.5	(63) BU / WH	(63) 2918	(63) Fuel Rail Pressure Sensor Signal	(63) II	(63) —
(64) 64	(64) 0.5	(64) GY	(64) 23	(64) Generator Field Duty Cycle Signal	(64) II	(64) —

Pin	Size	Color	Circuit	Function	Terminal Type ID	Option
(65) 65	(65) 0.75	(65) GN / GY	(65) 4903	(65) Direct Fuel Injector High Voltage Supply Cylinder 3	(65) II	(65) —
(66) 66	(66) 0.75	(66) BU / WH	(66) 4904	(66) Direct Fuel Injector High Voltage Supply Cylinder 4	(66) II	(66) —
(67) 67	(67) 0.75	(67) GN / WH	(67) 4905	(67) Direct Fuel Injector High Voltage Supply Cylinder 5	(67) II	(67) —
(68) 68	(68) 0.75	(68) VT / GY	(68) 4906	(68) Direct Fuel Injector High Voltage Supply Cylinder 6	(68) II	(68) —
(69) 69	(69) 0.75	(69) BU / GY	(69) 4902	(69) Direct Fuel Injector High Voltage Supply Cylinder 2	(69) II	(69) —
(70) 70	(70) 0.75	(70) WH / YE	(70) 4907	(70) Direct Fuel Injector High Voltage Supply Cylinder 7	(70) II	(70) —
(71) 71	(71) 0.75	(71) GY / WH	(71) 4908	(71) Direct Fuel Injector High Voltage Supply Cylinder 8	(71) II	(71) —
(72) 72	(72) 0.75	(72) BN / WH	(72) 4901	(72) Direct Fuel Injector High Voltage Supply Cylinder 1	(72) II	(72) —
(73) 73	(73) 2.5	(73) BK / WH	(73) 6151	(73) Engine Control Module Ground	(73) I	(73) —

K29FV Front Seat Heater Vent Control Module X1 (KA1)

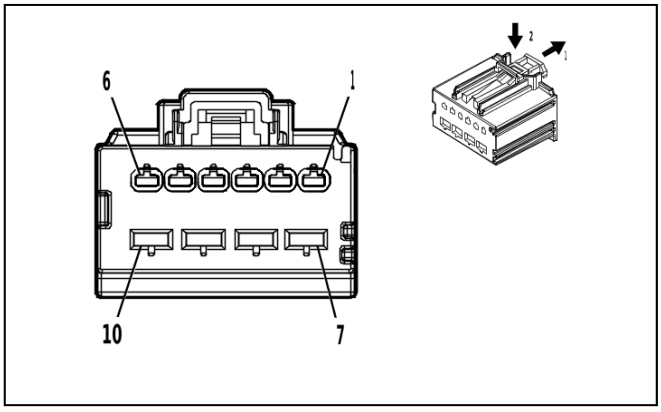

5035058

Connector Part Information

- Harness Type: Front Seat Wiring Harness - Passenger
- OEM Connector: 13525907
- Service Connector: Service by Harness - See Part Catalog
- Description: 10-Way F 1.5, 2.8 MX Series(BK)

Terminal Part Information

Terminal Type ID	Terminated Lead	Diagnostic Test Probe	Terminal Removal Tool
I	Not required	No Tool Required	No Tool Required

K29FV Front Seat Heater Vent Control Module X1 (KA1)

Pin	Size	Color	Circuit	Function	Terminal Type ID	Option
(1) 1	(1) —	(1) WH / BN	(1) 2481	(1) Passenger Seat Back Heating Element Control	(1) I	(1) —
(2) 2	(2) —	(2) BN / BU	(2) 2479	(2) Passenger Seat Heating Element Control	(2) I	(2) —
(3) 3	(3) —	(3) GY / BK	(3) 2480	(3) Passenger Seat Heating Element Low Reference	(3) I	(3) —
(4) 4	(4) —	(4) BN / BK	(4) 2078	(4) Driver Seat Heating Element Low Reference	(4) I	(4) —
(5) 5	(5) —	(5) BN	(5) 2432	(5) Driver Seat Back Heating Element Control	(5) I	(5) —
(6) 6	(6) —	(6) BN / VT	(6) 2077	(6) Driver Seat Heating Element Control	(6) I	(6) —
(7) 7	(7) —	(7) RD / GN	(7) 6140	(7) Battery Positive Voltage	(7) I	(7) —
(8) 8	(8) —	(8) BK	(8) 1250	(8) Ground	(8) I	(8) —
9	—	—	—	Not Occupied	—	—
(10) 10	(10) —	(10) RD / BN	(10) 6640	(10) Battery Positive Voltage	(10) I	(10) —

K29FV Front Seat Heater Vent Control Module X2 (KA1)

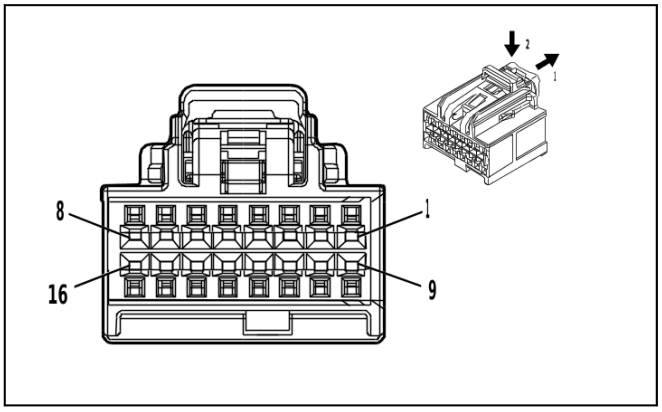

4873243

Connector Part Information

- Harness Type: Front Seat Wiring Harness - Passenger
- OEM Connector: 13519738
- Service Connector: Service by Harness - See Part Catalog
- Description: 16-Way F 0.64 OCS Series(BK)

Terminal Part Information

Terminal Type ID	Terminated Lead	Diagnostic Test Probe	Terminal Removal Tool
I	Not required	No Tool Required	No Tool Required

K29FV Front Seat Heater Vent Control Module X2 (KA1)

Pin	Size	Color	Circuit	Function	Terminal Type ID	Option
(1) 1	(1) —	(1) BK / YE	(1) 2080	(1) Driver Heated Seat Thermistor Low Reference	(1) I	(1) —
(2) 2	(2) —	(2) BK / GY	(2) 2435	(2) Passenger Heated Seat Thermistor Low Reference	(2) I	(2) —
(3) 3	(3) —	(3) BU	(3) 2425	(3) Driver Seat Back Heating Temperature Sensor Signal	(3) I	(3) —
(4) 4	(4) —	(4) WH / BU	(4) 2436	(4) Passenger Seat Back Heating Temperature Sensor Signal	(4) I	(4) —
(5) 5	(5) —	(5) WH / GY	(5) 2434	(5) Passenger Seat Heating Temperature Sensor Signal	(5) I	(5) —
(6) 6	(6) —	(6) YE / GY	(6) 2079	(6) Driver Seat Heating Temperature Sensor Signal	(6) I	(6) —
7	—	—	—	Not Occupied	—	—
(8) 8	(8) —	(8) GN / VT	(8) 2857	(8) Body Control Module LIN Bus 11	(8) I	(8) —
(9) 9	(9) —	(9) GN / VT	(9) 5906	(9) Driver Seat Blower Motor Control 1	(9) I	(9) —
(10) 10	(10) —	(10) VT / WH	(10) 5908	(10) Passenger Seat Blower Motor Control 1	(10) I	(10) —
11	—	—	—	Not Occupied	—	—
(12) 12	(12) —	(12) BK / GN	(12) 2482	(12) Passenger Heated Back Thermistor Low Reference	(12) I	(12) —
13 - 16	—	—	—	Not Occupied	—	—

K29R Rear Seat Heater Control Module X1 (KA6)

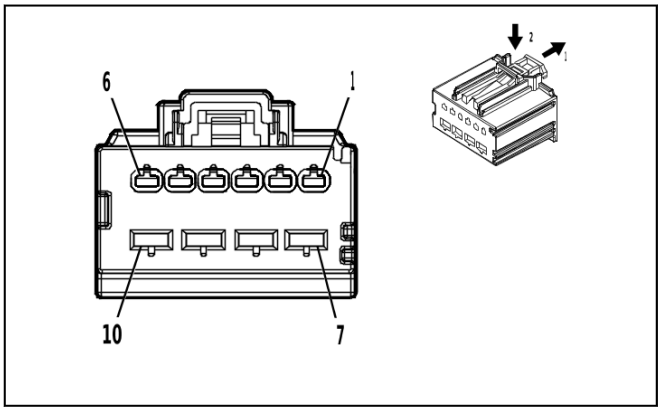

5035058

Connector Part Information

- Harness Type: 2nd Row Seat Wiring Harness - Right Cushion
- OEM Connector: 13525907
- Service Connector: Service by Harness - See Part Catalog
- Description: 10-Way F 1.5, 2.8 MX Series(BK)

Terminal Part Information

Terminal Type ID	Terminated Lead	Diagnostic Test Probe	Terminal Removal Tool
I	Not required	No Tool Required	No Tool Required

K29R Rear Seat Heater Control Module X1 (KA6)

Pin	Size	Color	Circuit	Function	Terminal Type ID	Option
1	—	—	—	Not Occupied	—	—
(2) 2	(2) —	(2) GN / BN	(2) 2296	(2) Right Rear Seat Cushion Heating Element Control	(2) I	(2) —
(3) 3	(3) —	(3) GN / BK	(3) 2457	(3) Right Rear Seat Heating Element Low Reference	(3) I	(3) —
(4) 4	(4) —	(4) BU / BK	(4) 2446	(4) Left Rear Seat Heating Element Low Reference	(4) I	(4) —
5	—	—	—	Not Occupied	—	—
(6) 6	(6) —	(6) GY	(6) 2294	(6) Left Rear Seat Cushion Heating Element Control	(6) I	(6) —
(7) 7	(7) —	(7) RD / BU	(7) 6740	(7) Battery Positive Voltage	(7) I	(7) —
(8) 8	(8) —	(8) BK	(8) 1450	(8) Ground	(8) I	(8) —
9	—	—	—	Not Occupied	—	—
(10) 10	(10) —	(10) RD / WH	(10) 5740	(10) Battery Positive Voltage	(10) I	(10) —

K29R Rear Seat Heater Control Module X2 (KA6)

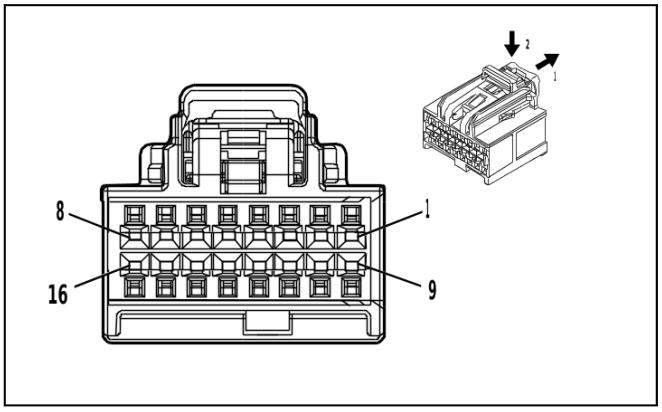

4873243

Connector Part Information

- Harness Type: 2nd Row Seat Wiring Harness - Right Cushion
- OEM Connector: 13519738
- Service Connector: Service by Harness - See Part Catalog
- Description: 16-Way F 0.64 OCS Series(BK)

Terminal Part Information

Terminal Type ID	Terminated Lead	Diagnostic Test Probe	Terminal Removal Tool
I	Not required	No Tool Required	No Tool Required

K29R Rear Seat Heater Control Module X2 (KA6)

Pin	Size	Color	Circuit	Function	Terminal Type ID	Option
(1) 1	(1) —	(1) BU / WH	(1) 7048	(1) Left Rear Cushion Thermistor Feedback Signal	(1) I	(1) —
(2) 2	(2) —	(2) WH / BK	(2) 7054	(2) Right Rear Cushion Thermistor Feedback Signal	(2) I	(2) —
3 - 4	—	—	—	Not Occupied	—	—
(5) 5	(5) —	(5) YE / WH	(5) 7053	(5) Right Rear Seat Cushion Temperature Sensor Signal	(5) I	(5) —
(6) 6	(6) —	(6) WH / BU	(6) 7047	(6) Left Rear Seat Cushion Temperature Sensor Signal	(6) I	(6) —
(7) 7	(7) —	(7) BK	(7) 1450	(7) Ground	(7) I	(7) —
(8) 8	(8) —	(8) GN / VT	(8) 2857	(8) Body Control Module LIN Bus 11	(8) I	(8) —
9 - 16	—	—	—	Not Occupied	—	—

K32 Heated Steering Wheel Module X1 (KI3 - UKL)

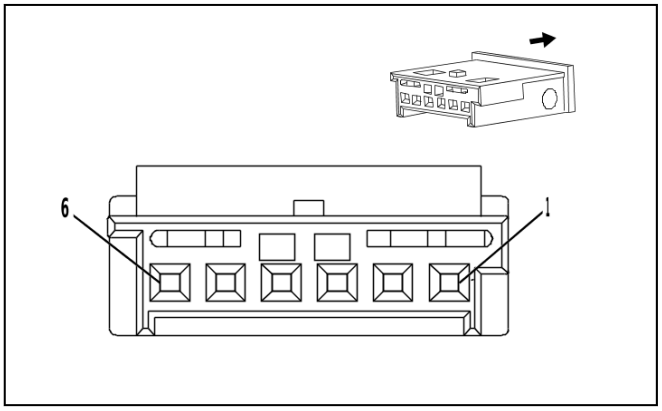

1862024

Connector Part Information

- Harness Type: Steering Wheel Horn Switch Wiring Harness
- OEM Connector: 1-1241370-3
- Service Connector: Service by Harness - See Part Catalog
- Description: 6-Way F 0.64 Micro-Quadlock Series(BK)

Terminal Part Information

Terminal Type ID	Terminated Lead	Diagnostic Test Probe	Terminal Removal Tool
I	Not required	J-35616-64B (L-BU)	No Tool Required

K32 Heated Steering Wheel Module X1 (KI3 - UKL)

Pin	Size	Color	Circuit	Function	Terminal Type ID	Option
(1) 1	(1) 0.35	(1) YE / GY	(1) 5883	(1) Steering Wheel Heating Switch Signal	(1) I	(1) —
(2) 2	(2) 0.35	(2) BN / WH	(2) 5884	(2) Steering Wheel Heating Switch LED Control	(2) I	(2) —
(3) 3	(3) 0.5	(3) RD / BU	(3) 6040	(3) Battery Positive Voltage	(3) I	(3) —

Pin	Size	Color	Circuit	Function	Terminal Type ID	Option
(4) 4	(4) 0.5	(4) BK	(4) 6050	(4) Steering Wheel Ground	(4) I	(4) —
(5) 5	(5) 0.35	(5) BK / WH	(5) 6051	(5) Steering Wheel Ground	(5) I	(5) —
(6) 6	(6) 0.35	(6) GN / BK	(6) 2858	(6) Body Control Module LIN Bus 12	(6) I	(6) —

K32 Heated Steering Wheel Module X2 (KI3 - UKL)

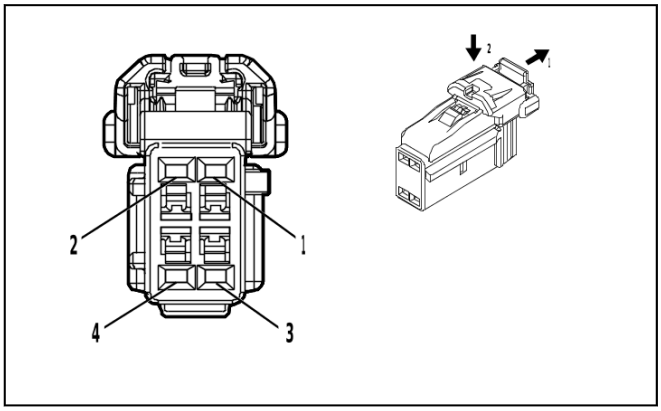

4872683

Connector Part Information

- Harness Type: Steering Wheel Harness
- OEM Connector: Not Available
- Service Connector: Service by Harness - See Part Catalog
- Description: 4-Way

Terminal Part Information

Terminal Type ID	Terminated Lead	Diagnostic Test Probe	Terminal Removal Tool
I	Not required	No Tool Required	No Tool Required

K32 Heated Steering Wheel Module X2 (KI3 - UKL)

Pin	Size	Color	Circuit	Function	Terminal Type ID	Option
(1) 1	(1) 0.75	(1) WH / YE	(1) 5888	(1) Steering Wheel Heating High Control	(1) I	(1) —
(2) 2	(2) 0.75	(2) GY / YE	(2) 5887	(2) Steering Wheel Heating Low Control	(2) I	(2) —
(3) 3	(3) 0.35	(3) YE / RD	(3) 5885	(3) Steering Wheel Heating Voltage Reference	(3) I	(3) —
(4) 4	(4) 0.35	(4) VT / BU	(4) 5886	(4) Steering Wheel Heating Temperature Sensor Signal	(4) I	(4) —

K36 Restraints Control Module X1

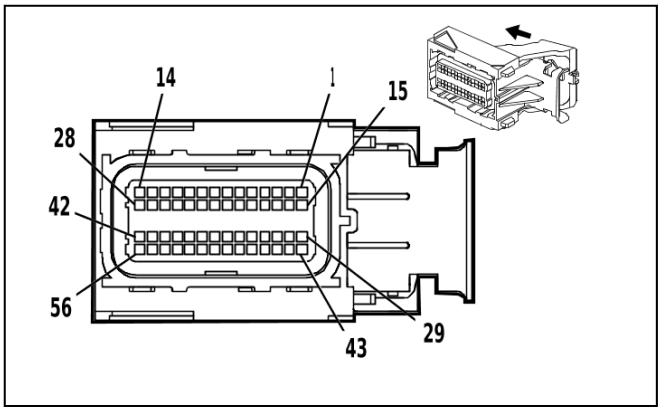

1590948

Connector Part Information

- Harness Type: Body Wiring Harness
- OEM Connector: 12728284
- Service Connector: 85090371
- Description: 56-Way F 0.64 Series, Sealed(BK with BU Terminal Position Assurance)

Terminal Part Information

Terminal Type ID	Terminated Lead	Diagnostic Test Probe	Terminal Removal Tool
I	19354746	J-35616-64B (L-BU)	J-38125-213

K36 Restraints Control Module X1

Pin	Size	Color	Circuit	Function	Terminal Type ID	Option
1 - 6	—	—	—	Not Occupied	—	—
(7) 7	(7) 0.5	(7) BK / OG	(7) 5045	(7) Left Front Impact Discriminating Sensor Low Reference	(7) I	(7) —
(8) 8	(8) 0.5	(8) OG / YE	(8) 354	(8) Left Front Impact Discriminating Sensor Signal	(8) I	(8) —
(9) 9	(9) 0.5	(9) OG / GN	(9) 1409	(9) Right Front Impact Discriminating Sensor Signal	(9) I	(9) —
(10) 10	(10) 0.5	(10) BK / OG	(10) 5600	(10) Right Front Impact Discriminating Sensor Low Reference	(10) I	(10) —
(11) 11	(11) 0.5	(11) WH / OG	(11) 3476	(11) Passenger Seat Belt Retractor Pretensioner Low Control	(11) I	(11) —
(12) 12	(12) 0.5	(12) OG / GN	(12) 3475	(12) Passenger Seat Belt Retractor Pretensioner High Control	(12) I	(12) —
(13) 13	(13) 0.5	(13) YE / OG	(13) 3025	(13) Passenger Instrument Panel Air Bag Stage 1 High Control	(13) I	(13) —
(14) 14	(14) 0.5	(14) OG / WH	(14) 3024	(14) Passenger Instrument Panel Air Bag Stage 1 Low Control	(14) I	(14) —
15 - 24	—	—	—	Not Occupied	—	—
(25) 25	(25) 0.5	(25) VT / OG	(25) 3478	(25) Driver Seat Belt Retractor Pretensioner Low Control	(25) I	(25) —
(26) 26	(26) 0.5	(26) OG / WH	(26) 3477	(26) Driver Seat Belt Retractor Pretensioner High Control	(26) I	(26) —
(27) 27	(27) 0.5	(27) OG / VT	(27) 3021	(27) Steering Wheel Air Bag Stage 1 High Control	(27) I	(27) —

Pin	Size	Color	Circuit	Function	Terminal Type ID	Option
(28) 28	(28) 0.5	(28) BN / OG	(28) 3020	(28) Steering Wheel Air Bag Stage 1 Low Control	(28) I	(28) —
(29) 29	(29) 0.35	(29) BU / GN	(29) 4103	(29) AUTOSAR CAN Bus [+] 9 Serial Data	(29) I	(29) —
(30) 30	(30) 0.35	(30) WH / GN	(30) 4102	(30) AUTOSAR CAN Bus [-] 9 Serial Data	(30) I	(30) —
31	—	—	—	Not Occupied	—	—
(32) 32	(32) 0.5	(32) OG / BN	(32) 3479	(32) Passenger Seat Belt Anchor Pretensioner High Control	(32) I	(32) —
(33) 33	(33) 0.5	(33) GY / OG	(33) 3480	(33) Passenger Seat Belt Anchor Pretensioner Low Control	(33) I	(33) —
34 - 37	—	—	—	Not Occupied	—	—
(38) 38	(38) 0.5	(38) OG / VT	(38) 3026	(38) Passenger Instrument Panel Air Bag Stage 2 Low Control	(38) I	(38) —
(39) 39	(39) 0.5	(39) GY / OG	(39) 3027	(39) Passenger Instrument Panel Air Bag Stage 2 High Control	(39) I	(39) —
40 - 41	—	—	—	Not Occupied	—	—
(42) 42	(42) 0.75	(42) BK / WH	(42) 1351	(42) Signal Ground	(42) I	(42) —
(43) 43	(43) 0.35	(43) BU / GN	(43) 4103	(43) AUTOSAR CAN Bus [+] 9 Serial Data	(43) I	(43) —
(44) 44	(44) 0.35	(44) WH / GN	(44) 4102	(44) AUTOSAR CAN Bus [-] 9 Serial Data	(44) I	(44) —
45	—	—	—	Not Occupied	—	—
(46) 46	(46) 0.5	(46) VT / OG	(46) 3482	(46) Driver Seat Belt Anchor Pretensioner Low Control	(46) I	(46) —
(47) 47	(47) 0.5	(47) OG / YE	(47) 3481	(47) Driver Seat Belt Anchor Pretensioner High Control	(47) I	(47) —
48 - 49	—	—	—	Not Occupied	—	—
(50) 50	(50) 0.5	(50) BN / WH	(50) 3895	(50) Roof Rail Air Bag Disable Switch Low Reference	(50) I	(50) —
(51) 51	(51) 0.5	(51) BU / WH	(51) 3119	(51) Roof Rail Air Bag Disable Switch Signal	(51) I	(51) —
52	—	—	—	Not Occupied	—	—
(53) 53	(53) 0.5	(53) WH / OG	(53) 3022	(53) Steering Wheel Air Bag Stage 2 Low Control	(53) I	(53) —
(54) 54	(54) 0.5	(54) OG / GN	(54) 3023	(54) Steering Wheel Air Bag Stage 2 High Control	(54) I	(54) —
(55) 55	(55) 0.5	(55) VT / WH	(55) 239	(55) Run/Crank Ignition 1 Voltage	(55) I	(55) —
(56) 56	(56) 0.5	(56) RD / GN	(56) 4440	(56) Battery Positive Voltage	(56) I	(56) —

K36 Restraints Control Module X2

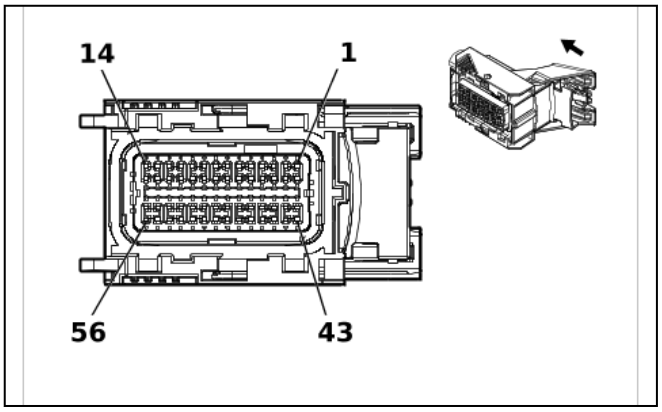

5377124

Connector Part Information

- Harness Type: Body Wiring Harness
- OEM Connector: 12728285
- Service Connector: 85004498
- Description: 56-Way F 0.64 Series, Sealed(BK)

Terminal Part Information

Terminal Type ID	Terminated Lead	Diagnostic Test Probe	Terminal Removal Tool
I	19354746	J-35616-64B (L-BU)	J-38125-213

K36 Restraints Control Module X2

Pin	Size	Color	Circuit	Function	Terminal Type ID	Option
1 - 8	—	—	—	Not Occupied	—	—
(9) 9	(9) 0.5	(9) VT / OG	(9) 3517	(9) 3rd Row Right Seat Belt Switch Signal	(9) I	(9) —
(10) 10	(10) 0.5	(10) BU / OG	(10) 5163	(10) Rear Center Seat Belt Switch Signal	(10) I	(10) —
(11) 11	(11) 0.5	(11) YE / OG	(11) 5161	(11) Left Rear Seat Belt Switch Signal	(11) I	(11) —
(12) 12	(12) 0.5	(12) OG / GY	(12) 2652	(12) Driver Seat Belt Sensor Signal	(12) I	(12) —
(13) 13	(13) 0.5	(13) BK / OG	(13) 6627	(13) Right Rear Side Impact Sensor Low Reference	(13) I	(13) —
(14) 14	(14) 0.5	(14) OG / WH	(14) 6626	(14) Right Rear Side Impact Sensor Signal	(14) I	(14) —
15 - 20	—	—	—	Not Occupied	—	—
(21) 21	(21) 0.5	(21) OG / GN	(21) 3700	(21) 3rd Row Center Seat Belt Switch Signal	(21) I	(21) —
(22) 22	(22) 0.5	(22) GN / OG	(22) 3516	(22) 3rd Row Left Seat Belt Switch Signal	(22) I	(22) —
(23) 23	(23) 0.5	(23) BK / OG	(23) 1363	(23) Driver Seat Belt Switch Low Reference	(23) I	(23) —
(24) 24	(24) 0.5	(24) BN / OG	(24) 5162	(24) Right Rear Seat Belt Switch Signal	(24) I	(24) —
(25) 25	(25) 0.5	(25) OG / VT	(25) 1362	(25) Passenger Seat Belt Switch Signal	(25) I	(25) —

Pin	Size	Color	Circuit	Function	Terminal Type ID	Option
26	—	—	—	Not Occupied	—	—
(27) 27	(27) 0.5	(27) BK / OG	(27) 6628	(27) Left Front Side Impact Sensor Low Reference	(27) I	(27) —
(28) 28	(28) 0.5	(28) OG / GN	(28) 2132	(28) Left Front Side Impact Sensor Signal	(28) I	(28) —
29 - 36	—	—	—	Not Occupied	—	—
(37) 37	(37) 0.5	(37) OG / GY	(37) 5021	(37) Right Front Roof Rail Air Bag High Control	(37) I	(37) —
(38) 38	(38) 0.5	(38) WH / OG	(38) 5022	(38) Right Front Roof Rail Air Bag Low Control	(38) I	(38) —
(39) 39	(39) 0.5	(39) BU / OG	(39) 4957	(39) Passenger Seat Back Air Bag Low Control	(39) I	(39) —
(40) 40	(40) 0.5	(40) OG / GY	(40) 4956	(40) Passenger Seat Back Air Bag High Control	(40) I	(40) —
(41) 41	(41) 0.5	(41) BK / OG	(41) 6629	(41) Right Front Side Impact Sensor Low Reference	(41) I	(41) —
(42) 42	(42) 0.5	(42) BN / OG	(42) 2134	(42) Right Front Side Impact Sensor Signal	(42) I	(42) —
43 - 44	—	—	—	Not Occupied	—	—
(45) 45	(45) 0.5	(45) GY / OG	(45) 4208	(45) Driver Inboard Seat Side Air Bag Low Control	(45) I	(45) —
(46) 46	(46) 0.5	(46) OG / BN	(46) 4207	(46) Driver Inboard Seat Side Air Bag High Control	(46) I	(46) —
47 - 50	—	—	—	Not Occupied	—	—
(51) 51	(51) 0.5	(51) OG / GN	(51) 5019	(51) Left Front Roof Rail Air Bag High Control	(51) I	(51) —
(52) 52	(52) 0.5	(52) VT / OG	(52) 5020	(52) Left Front Roof Rail Air Bag Low Control	(52) I	(52) —
(53) 53	(53) 0.5	(53) BK / OG	(53) 4963	(53) Driver Seat Back Air Bag Low Control	(53) I	(53) —
(54) 54	(54) 0.5	(54) OG / BU	(54) 4962	(54) Driver Seat Back Air Bag High Control	(54) I	(54) —
(55) 55	(55) 0.5	(55) BK / OG	(55) 6623	(55) Left Rear Side Impact Sensor Low Reference	(55) I	(55) —
(56) 56	(56) 0.5	(56) OG / BU	(56) 6622	(56) Left Rear Side Impact Sensor Signal	(56) I	(56) —

K38 Chassis Control Module (G96)

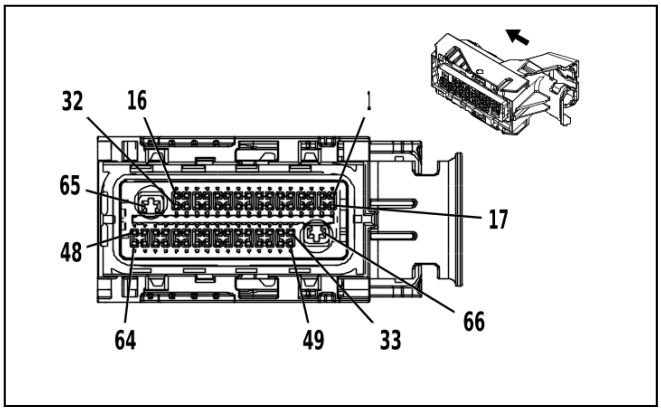

4504420

Connector Part Information

- Harness Type: Body Wiring Harness
- OEM Connector: 12707495
- Service Connector: 85761018
- Description: 66-Way F 0.64, 2.8 Series, Sealed(BK with BU Terminal Position Assurance)

Terminal Part Information

Terminal Type ID	Terminated Lead	Diagnostic Test Probe	Terminal Removal Tool
I	13587518	J-35616-35 (VT)	J-38125-11A
II	19354746	J-35616-64B (L-BU)	J-38125-213

K38 Chassis Control Module (G96)

Pin	Size	Color	Circuit	Function	Terminal Type ID	Option
1 - 5	—	—	—	Not Occupied	—	—
(6) 6	(6) 0.5	(6) VT / WH	(6) 639	(6) Run/Crank Ignition 1 Voltage	(6) II	(6) —
7 - 33	—	—	—	Not Occupied	—	—
(34) 34	(34) 0.5	(34) BU / BK	(34) 4977	(34) AUTOSAR CAN Bus [+] 3 Serial Data	(34) II	(34) —
(35) 35	(35) 0.5	(35) BU / BK	(35) 4977	(35) AUTOSAR CAN Bus [+] 3 Serial Data	(35) II	(35) —
(36) 36	(36) 0.5	(36) WH	(36) 4976	(36) AUTOSAR CAN Bus [-] 3 Serial Data	(36) II	(36) —
(37) 37	(37) 0.5	(37) WH	(37) 4976	(37) AUTOSAR CAN Bus [-] 3 Serial Data	(37) II	(37) —
38 - 64	—	—	—	Not Occupied	—	—
(65) 65	(65) 0.5	(65) BK	(65) 2050	(65) Ground	(65) I	(65) —
(66) 66	(66) 0.5	(66) RD / GN	(66) 2642	(66) Battery Positive Voltage	(66) I	(66) —

K40D Driver Seat Adjuster Memory Module X1 (A45 / AUN)

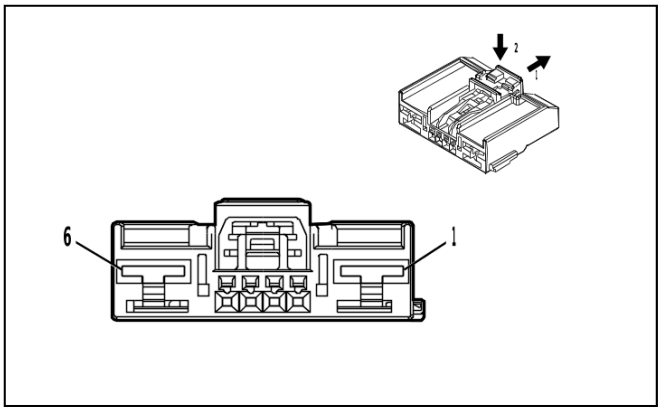

4650258

Connector Part Information

- Harness Type: Front Seat Wiring Harness - Driver
- OEM Connector: 13511335
- Service Connector: Service by Harness - See Part Catalog
- Description: 6-Way F 0.64, 6.3 Series(BK)

Terminal Part Information

Terminal Type ID	Terminated Lead	Diagnostic Test Probe	Terminal Removal Tool
I	Not required	No Tool Required	No Tool Required

K40D Driver Seat Adjuster Memory Module X1 (A45 / AUN)

Pin	Size	Color	Circuit	Function	Terminal Type ID	Option
(1) 1	(1) —	(1) BK	(1) 1150	(1) Ground	(1) I	(1) —
2	—	—	—	Not Occupied	—	—
(3) 3	(3) —	(3) RD / BN	(3) 2240	(3) Battery Positive Voltage	(3) I	(3) —
4 - 5	—	—	—	Not Occupied	—	—
(6) 6	(6) —	(6) RD / YE	(6) 5040	(6) Battery Positive Voltage	(6) I	(6) —

K40D Driver Seat Adjuster Memory Module X2 (A45 / AUN)

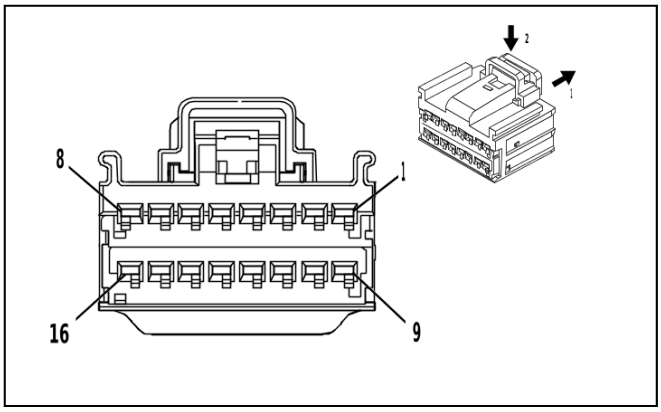

4332214

Connector Part Information

- Harness Type: Front Seat Wiring Harness - Driver
- OEM Connector: 13591061
- Service Connector: Service by Harness - See Part Catalog
- Description: 16-Way F 1.5 OCS Series(BK)

Terminal Part Information

Terminal Type ID	Terminated Lead	Diagnostic Test Probe	Terminal Removal Tool
I	Not required	No Tool Required	No Tool Required

K40D Driver Seat Adjuster Memory Module X2 (A45 / AUN)

Pin	Size	Color	Circuit	Function	Terminal Type ID	Option
(1) 1	(1) —	(1) YE / BU	(1) 285	(1) Driver Seat Horizontal Motor Forward Control	(1) I	(1) —
2	—	—	—	Not Occupied	—	—
(3) 3	(3) —	(3) GN / YE	(3) 276	(3) Driver Seat Recline Motor Forward Control	(3) I	(3) —
4 - 5	—	—	—	Not Occupied	—	—
(6) 6	(6) —	(6) BU / VT	(6) 287	(6) Driver Seat Front Vertical Motor Down Control	(6) I	(6) —
(7) 7	(7) —	(7) YE	(7) 282	(7) Driver Seat Rear Vertical Motor Up Control	(7) I	(7) —
8	—	—	—	Not Occupied	—	—
(9) 9	(9) —	(9) BU / YE	(9) 277	(9) Driver Seat Recline Motor Rearward Control	(9) I	(9) —
10	—	—	—	Not Occupied	—	—
(11) 11	(11) —	(11) GY / GN	(11) 284	(11) Driver Seat Horizontal Motor Rearward Control	(11) I	(11) —
12	—	—	—	Not Occupied	—	—
(13) 13	(13) —	(13) GY / BU	(13) 283	(13) Driver Seat Rear Vertical Motor Down Control	(13) I	(13) —
14 - 15	—	—	—	Not Occupied	—	—
(16) 16	(16) —	(16) GN / BN	(16) 286	(16) Driver Seat Front Vertical Motor Up Control	(16) I	(16) —

K40D Driver Seat Adjuster Memory Module X3 (A45 / AUN)

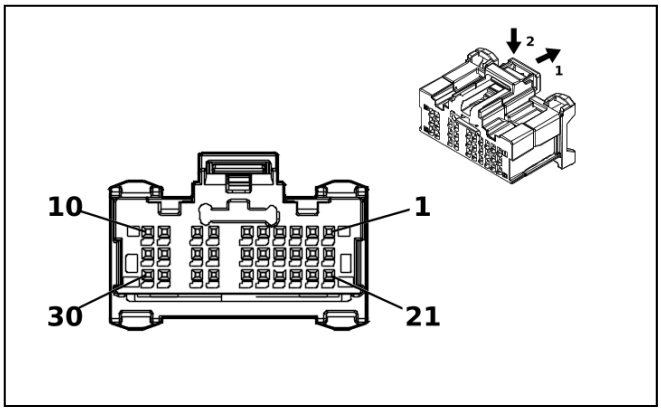

5202284

Connector Part Information

- Harness Type: Front Seat Wiring Harness - Driver
- OEM Connector: 13519317
- Service Connector: Service by Harness - See Part Catalog
- Description: 30-Way F 0.5 MQS Series(BK)

Terminal Part Information

Terminal Type ID	Terminated Lead	Diagnostic Test Probe	Terminal Removal Tool
I	Not required	No Tool Required	No Tool Required

K40D Driver Seat Adjuster Memory Module X3 (A45 / AUN)

Pin	Size	Color	Circuit	Function	Terminal Type ID	Option
1	—	—	—	Not Occupied	—	—
(2) 2	(2) —	(2) BU / GN	(2) 614	(2) Seat Memory Switch Set Signal	(2) I	(2) —
3 - 4	—	—	—	Not Occupied	—	—
(5) 5	(5) —	(5) BN	(5) 3038	(5) Driver Seat Right Rear Haptic Movement Motor Control	(5) I	(5) —
(6) 6	(6) —	(6) YE / BN	(6) 3037	(6) Driver Seat Left Rear Haptic Movement Motor Control	(6) I	(6) —
7	—	—	—	Not Occupied	—	—
(8) 8	(8) —	(8) GN / WH	(8) 7530	(8) Driver Seat Adjuster Memory Module LIN Bus 1	(8) I	(8) —
(9) 9	(9) —	(9) WH	(9) 4100	(9) AUTOSAR CAN Bus [-] 4 Serial Data	(9) I	(9) —
(10) 10	(10) —	(10) BU / VT	(10) 4101	(10) AUTOSAR CAN Bus [+] 4 Serial Data	(10) I	(10) —
11 - 15	—	—	—	Not Occupied	—	—
(16) 16	(16) —	(16) WH	(16) 615	(16) Seat Memory Switch Signal 1	(16) I	(16) —
17	—	—	—	Not Occupied	—	—
(18) 18	(18) —	(18) GN / GY	(18) 3758	(18) Driver Seat Adjuster Memory Module LIN Bus 2	(18) I	(18) —
(19) 19	(19) —	(19) WH	(19) 4100	(19) AUTOSAR CAN Bus [-] 4 Serial Data	(19) I	(19) —
(20) 20	(20) —	(20) BU / VT	(20) 4101	(20) AUTOSAR CAN Bus [+] 4 Serial Data	(20) I	(20) —
21 - 30	—	—	—	Not Occupied	—	—

K43 Power Steering Control Module X1

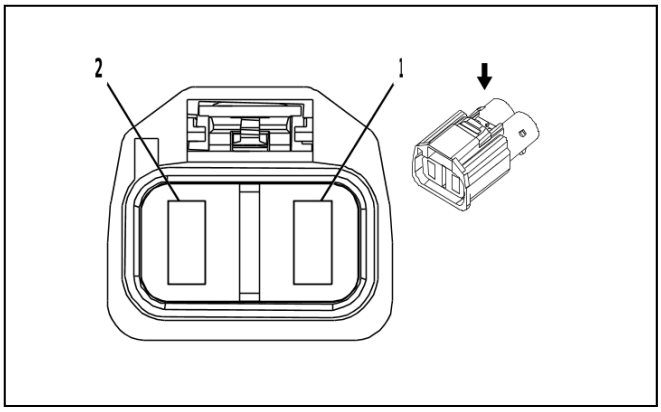

2748050

Connector Part Information
- Harness Type: Power Steering Control Module Wiring Harness
- OEM Connector: Not Available
- Service Connector: Service by Harness - See Part Catalog
- Description: 2-Way

Terminal Part Information

Terminal Type ID	Terminated Lead	Diagnostic Test Probe	Terminal Removal Tool
I	Not required	No Tool Required	No Tool Required

K43 Power Steering Control Module X1

Pin	Size	Color	Circuit	Function	Terminal Type ID	Option
(1) 1	(1) 25	(1) BK	(1) 350	(1) Ground	(1) I	(1) —
(2) 2	(2) 25	(2) RD / VT	(2) 842	(2) Battery Positive Voltage	(2) I	(2) —

K43 Power Steering Control Module X2

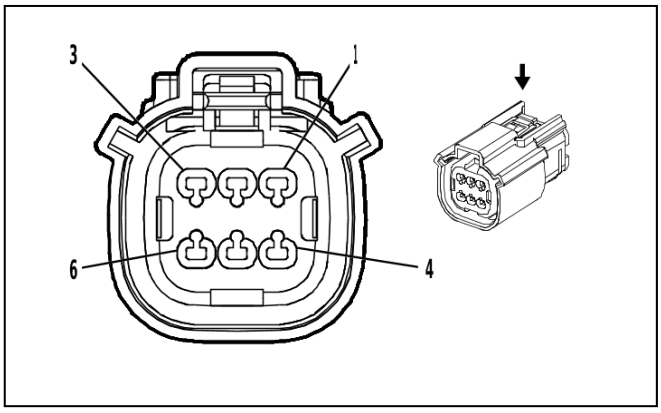

1986157

Connector Part Information
- Harness Type: Power Steering Control Module Wiring Harness
- OEM Connector: 33472-0674
- Service Connector: 13578533
- Description: 6-Way F 1.5 MX Series, Sealed(BK)

Terminal Part Information

Terminal Type ID	Terminated Lead	Diagnostic Test Probe	Terminal Removal Tool
I	Not required	J-35616-2A (GY)	No Tool Required

K43 Power Steering Control Module X2

Pin	Size	Color	Circuit	Function	Terminal Type ID	Option
(1) 1	(1) 0.5	(1) WH	(1) 4978	(1) AUTOSAR CAN Bus [-] 2 Serial Data	(1) I	(1) —
(2) 2	(2) 0.5	(2) BU / YE	(2) 4979	(2) AUTOSAR CAN Bus [+] 2 Serial Data	(2) I	(2) —
(3) 3	(3) 0.5	(3) BU / YE	(3) 4979	(3) AUTOSAR CAN Bus [+] 2 Serial Data	(3) I	(3) —
(4) 4	(4) 0.5	(4) WH	(4) 4978	(4) AUTOSAR CAN Bus [-] 2 Serial Data	(4) I	(4) —
5 - 6	—	—	—	Not Occupied	—	—

K43 Power Steering Control Module X3

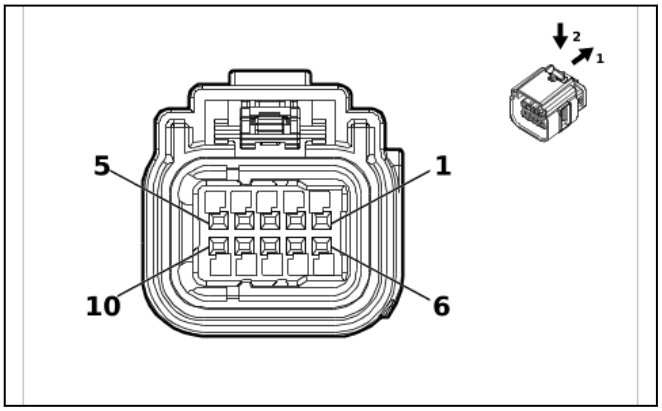

2748051

Connector Part Information

- Harness Type: Power Steering Control Module Wiring Harness
- OEM Connector: Not Available
- Service Connector: Service by Harness - See Part Catalog
- Description: 10-Way F 0.64 Series, Sealed(BN)

Terminal Part Information

Terminal Type ID	Terminated Lead	Diagnostic Test Probe	Terminal Removal Tool
I	Not required	No Tool Required	No Tool Required

K43 Power Steering Control Module X3

Pin	Size	Color	Circuit	Function	Terminal Type ID	Option
(1) 1	(1) —	(1) BU	(1) 8367	(1) Handwheel Channel A Torque Pressure Sensor 1 SENT Signal	(1) I	(1) —
(2) 2	(2) —	(2) RD	(2) 8366	(2) Handwheel Channel A High Reference	(2) I	(2) —
(3) 3	(3) —	(3) BK	(3) 8370	(3) Handwheel Channel A Low Reference	(3) I	(3) —
(4) 4	(4) —	(4) WH / RD	(4) 8371	(4) Handwheel Channel B High Reference	(4) I	(4) —

Pin	Size	Color	Circuit	Function	Terminal Type ID	Option
(5) 5	(5) —	(5) WH / BU	(5) 8372	(5) Handwheel Channel B Torque Pressure Sensor 1 SENT Signal	(5) I	(5) —
(6) 6	(6) —	(6) VT	(6) 8368	(6) Handwheel Channel A Torque Pressure Sensor 2 SENT Signal	(6) I	(6) —
(7) 7	(7) —	(7) OG	(7) 8369	(7) Handwheel Channel A Angle Position Sensor SENT Signal	(7) I	(7) —
(8) 8	(8) —	(8) GY	(8) 8375	(8) Handwheel Channel B Low Reference	(8) I	(8) —
(9) 9	(9) —	(9) YE	(9) 8374	(9) Handwheel Channel B Angle Position Sensor SENT Signal	(9) I	(9) —
(10) 10	(10) —	(10) GN	(10) 8373	(10) Handwheel Channel B Torque Pressure Sensor 2 SENT Signal	(10) I	(10) —

K56 Serial Data Gateway Module X1

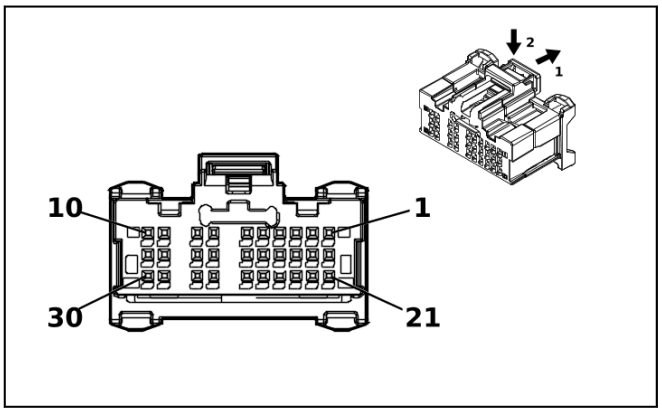

5202284

Connector Part Information

- Harness Type: Instrument Panel Wiring Harness
- OEM Connector: 2309644-1
- Service Connector: 84766507
- Description: 30-Way F 0.5 MQS Series(BK)

Terminal Part Information

Terminal Type ID	Terminated Lead	Diagnostic Test Probe	Terminal Removal Tool
I	19370262	EL-35616-58 (BK)	EL-38125-58
II	Service by Cable	EL-35616-58 (BK)	EL-38125-58

K56 Serial Data Gateway Module X1

Pin	Size	Color	Circuit	Function	Terminal Type ID	Option
(1) 1	(1) 0.35	(1) RD / VT	(1) 3340	(1) Battery Positive Voltage	(1) I	(1) —
(2) 2	(2) 0.35	(2) BU / GY	(2) 4105	(2) AUTOSAR CAN Bus [+] 8 Serial Data	(2) I	(2) —
(3) 3	(3) 0.35	(3) WH / GY	(3) 4104	(3) AUTOSAR CAN Bus [-] 8 Serial Data	(3) I	(3) —
(4) 4	(4) 0.35	(4) BK	(4) 1050	(4) Ground	(4) I	(4) —
(5) 5	(5) 0.35	(5) BU	(5) 4987	(5) AUTOSAR CAN Bus [+] 1 Serial Data	(5) I	(5) —

Pin	Size	Color	Circuit	Function	Terminal Type ID	Option
(6) 6	(6) 0.35	(6) WH	(6) 4986	(6) AUTOSAR CAN Bus [-] 1 Serial Data	(6) I	(6) —
(7) 7	(7) 0.35	(7) WH	(7) 4100	(7) AUTOSAR CAN Bus [-] 4 Serial Data	(7) I	(7) —
(8) 8	(8) 0.35	(8) BU / VT	(8) 4101	(8) AUTOSAR CAN Bus [+] 4 Serial Data	(8) I	(8) —
(9) 9	(9) 0.35	(9) WH	(9) 4976	(9) AUTOSAR CAN Bus [-] 3 Serial Data	(9) I	(9) —
(10) 10	(10) 0.35	(10) BU / BK	(10) 4977	(10) AUTOSAR CAN Bus [+] 3 Serial Data	(10) I	(10) —
11 - 12	—	—	—	Not Occupied	—	—
(13) 13	(13) 0.35	(13) WH / GY	(13) 4104	(13) AUTOSAR CAN Bus [-] 8 Serial Data	(13) I	(13) —
(14) 14	(14) 0.35	(14) BU / GY	(14) 4105	(14) AUTOSAR CAN Bus [+] 8 Serial Data	(14) I	(14) —
(15) 15	(15) 0.35	(15) BU	(15) 4987	(15) AUTOSAR CAN Bus [+] 1 Serial Data	(15) I	(15) —
(16) 16	(16) 0.35	(16) WH	(16) 4986	(16) AUTOSAR CAN Bus [-] 1 Serial Data	(16) I	(16) —
(17) 17	(17) 0.35	(17) WH	(17) 4978	(17) AUTOSAR CAN Bus [-] 2 Serial Data	(17) I	(17) —
(18) 18	(18) 0.35	(18) BU / YE	(18) 4979	(18) AUTOSAR CAN Bus [+] 2 Serial Data	(18) I	(18) —
(19) 19	(19) 0.35	(19) BU / YE	(19) 4984	(19) AUTOSAR CAN Bus [-] 5 Serial Data	(19) I	(19) —
(20) 20	(20) 0.35	(20) BU / WH	(20) 4985	(20) AUTOSAR CAN Bus [+] 5 Serial Data	(20) I	(20) —
(21) 21	(21) 0.35	(21) BN / WH	(21) 7209	(21) Ethernet Bus 3 [+]	(21) II	(21) —
(22) 22	(22) 0.35	(22) BN	(22) 7208	(22) Ethernet Bus 3 [-]	(22) II	(22) —
23 - 24	—	—	—	Not Occupied	—	—
(25) 25	(25) 0.35	(25) BU	(25) 4987	(25) AUTOSAR CAN Bus [+] 1 Serial Data	(25) I	(25) —
(26) 26	(26) 0.35	(26) WH	(26) 4986	(26) AUTOSAR CAN Bus [-] 1 Serial Data	(26) I	(26) —
(27) 27	(27) 0.35	(27) WH	(27) 4978	(27) AUTOSAR CAN Bus [-] 2 Serial Data	(27) I	(27) —
(28) 28	(28) 0.35	(28) BU / YE	(28) 4979	(28) AUTOSAR CAN Bus [+] 2 Serial Data	(28) I	(28) —
29 - 30	—	—	—	Not Occupied	—	—

K56 Serial Data Gateway Module X2

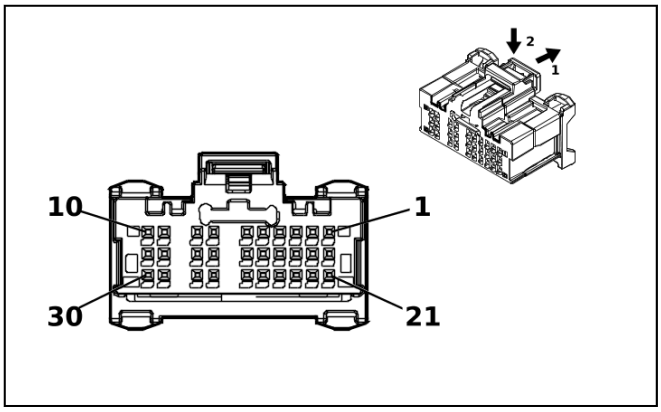

5203942

Connector Part Information

- Harness Type: Instrument Panel Wiring Harness
- OEM Connector: 2309644-2
- Service Connector: 84766509
- Description: 30-Way F 0.5 MQS Series(BK with L-GY Front Housing)

Terminal Part Information

Terminal Type ID	Terminated Lead	Diagnostic Test Probe	Terminal Removal Tool
I	19370262	EL-35616-58 (BK)	EL-38125-58
II	Service by Cable	EL-35616-58 (BK)	EL-38125-58

K56 Serial Data Gateway Module X2

Pin	Size	Color	Circuit	Function	Terminal Type ID	Option
1 - 4	—	—	—	Not Occupied	—	—
(5) 5	(5) 0.35	(5) BK / GY	(5) 3559	(5) Passive Start Switch 2 Low Reference	(5) I	(5) —
6	—	—	—	Not Occupied	—	—
(7) 7	(7) 0.35	(7) GN / VT	(7) 5199	(7) Run/Crank Relay Coil Control	(7) I	(7) —
8	—	—	—	Not Occupied	—	—
(9) 9	(9) 0.35	(9) YE / WH	(9) 4973	(9) Ethernet Bus 1R [+]	(9) II	(9) —
(10) 10	(10) 0.35	(10) YE	(10) 4972	(10) Ethernet Bus 1R [-]	(10) II	(10) —
11 - 12	—	—	—	Not Occupied	—	—
(13) 13	(13) 0.35	(13) BU / BN	(13) 4983	(13) AUTOSAR CAN Bus [+] 7 Serial Data	(13) I	(13) —
(14) 14	(14) 0.35	(14) WH	(14) 4982	(14) AUTOSAR CAN Bus [-] 7 Serial Data	(14) I	(14) —
(15) 15	(15) 0.35	(15) GN / BK	(15) 3558	(15) Passive Start Switch Signal 2	(15) I	(15) —
(16) 16	(16) 0.35	(16) WH	(16) 4980	(16) AUTOSAR CAN Bus [-] 6 Serial Data	(16) I	(16) —
(17) 17	(17) 0.35	(17) GN	(17) 2578	(17) Private Serial Data Presentation CAN Bus [+] 1 Serial Data	(17) I	(17) —

Pin	Size	Color	Circuit	Function	Terminal Type ID	Option
(18) 18	(18) 0.35	(18) BN	(18) 2577	(18) Private Serial Data Presentation CAN Bus [-] 1 Serial Data	(18) I	(18) —
(19) 19	(19) 0.35	(19) WH	(19) 7207	(19) Ethernet Bus 1 Enable Signal	(19) I	(19) —
20 - 22	—	—	—	Not Occupied	—	—
(23) 23	(23) 0.35	(23) BU / WH	(23) 4985	(23) AUTOSAR CAN Bus [+] 5 Serial Data	(23) I	(23) —
(24) 24	(24) 0.35	(24) BU / YE	(24) 4984	(24) AUTOSAR CAN Bus [-] 5 Serial Data	(24) I	(24) —
25	—	—	—	Not Occupied	—	—
(26) 26	(26) 0.35	(26) YE	(26) 4981	(26) AUTOSAR CAN Bus [+] 6 Serial Data	(26) I	(26) —
(27) 27	(27) 0.35	(27) VT	(27) 2580	(27) Private Serial Data Presentation CAN Bus [+] 2 Serial Data	(27) I	(27) —
(28) 28	(28) 0.35	(28) GY	(28) 2579	(28) Private Serial Data Presentation CAN Bus [-] 2 Serial Data	(28) I	(28) —
(29) 29	(29) 0.35	(29) GN / WH	(29) 4975	(29) Ethernet Bus 1T [+]	(29) II	(29) —
(30) 30	(30) 0.35	(30) GN	(30) 4974	(30) Ethernet Bus 1T [-]	(30) II	(30) —

K56 Serial Data Gateway Module X3

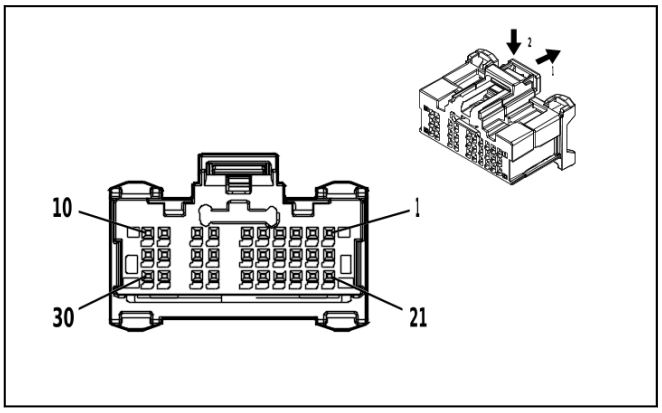

4900333

Connector Part Information

- Harness Type: Instrument Panel Wiring Harness
- OEM Connector: 2309644-3
- Service Connector: 13519319
- Description: 30-Way F 0.5 MQS Series(BK with D-GY Front Housing)

Terminal Part Information

Terminal Type ID	Terminated Lead	Diagnostic Test Probe	Terminal Removal Tool
I	19370262	EL-35616-58 (BK)	EL-38125-58
II	Service by Cable	EL-35616-58 (BK)	EL-38125-58

K56 Serial Data Gateway Module X3

Pin	Size	Color	Circuit	Function	Terminal Type ID	Option
(1) 1	(1) 0.35	(1) BU / GN	(1) 4103	(1) AUTOSAR CAN Bus [+] 9 Serial Data	(1) I	(1) —
(2) 2	(2) 0.35	(2) WH / GN	(2) 4102	(2) AUTOSAR CAN Bus [-] 9 Serial Data	(2) I	(2) —
3 - 4	—	—	—	Not Occupied	—	—
(5) 5	(5) 0.35	(5) BU	(5) 4987	(5) AUTOSAR CAN Bus [+] 1 Serial Data	(5) I	(5) —
(6) 6	(6) 0.35	(6) WH	(6) 4986	(6) AUTOSAR CAN Bus [-] 1 Serial Data	(6) I	(6) —
(7) 7	(7) 0.35	(7) BU / WH	(7) 4758	(7) Ethernet Bus 2 [+]	(7) II	(7) —
(8) 8	(8) 0.35	(8) BU	(8) 4757	(8) Ethernet Bus 2 [-]	(8) II	(8) —
9 - 24	—	—	—	Not Occupied	—	—
(25) 25	(25) 0.35	(25) BU / YE	(25) 4979	(25) AUTOSAR CAN Bus [+] 2 Serial Data	(25) I	(25) —
(26) 26	(26) 0.35	(26) WH	(26) 4978	(26) AUTOSAR CAN Bus [-] 2 Serial Data	(26) I	(26) —
27 - 30	—	—	—	Not Occupied	—	—

K56U Special Purpose Vehicle Control Module (KGU)

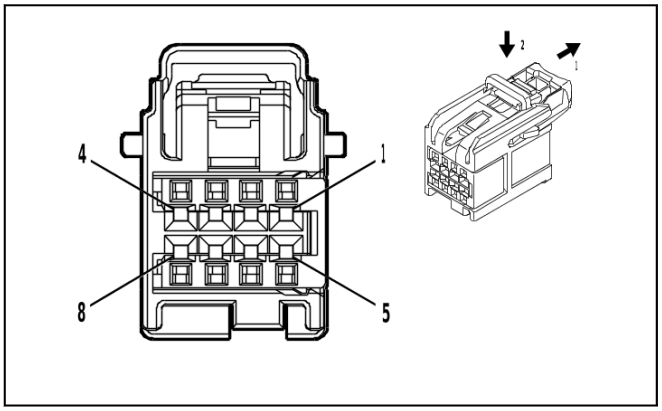

4935776

Connector Part Information

- Harness Type: Instrument Panel Wiring Harness
- OEM Connector: 15526972
- Service Connector: 19370429
- Description: 8-Way F 0.64 OCS Series(BK)

Terminal Part Information

Terminal Type ID	Terminated Lead	Diagnostic Test Probe	Terminal Removal Tool
I	Not required	J-35616-64B (L-BU)	No Tool Required

K56U Special Purpose Vehicle Control Module (KGU)

Pin	Size	Color	Circuit	Function	Terminal Type ID	Option
(1) 1	(1) 0.75	(1) RD / VT	(1) 14240	(1) Battery Positive Voltage	(1) I	(1) —
(2) 2	(2) 0.35	(2) BU	(2) 4987	(2) AUTOSAR CAN Bus [+] 1 Serial Data	(2) I	(2) —
(3) 3	(3) 0.35	(3) WH	(3) 4986	(3) AUTOSAR CAN Bus [-] 1 Serial Data	(3) I	(3) —
(4) 4	(4) 0.75	(4) BK	(4) 8950	(4) Upfitter Vehicle Module Ground	(4) I	(4) —
5	—	—	—	Not Occupied	—	—
(6) 6	(6) 0.5	(6) BU	(6) 4987	(6) AUTOSAR CAN Bus [+] 1 Serial Data	(6) I	(6) —
(7) 7	(7) 0.5	(7) WH	(7) 4986	(7) AUTOSAR CAN Bus [-] 1 Serial Data	(7) I	(7) —
8	—	—	—	Not Occupied	—	—

K60 Column Lock Module

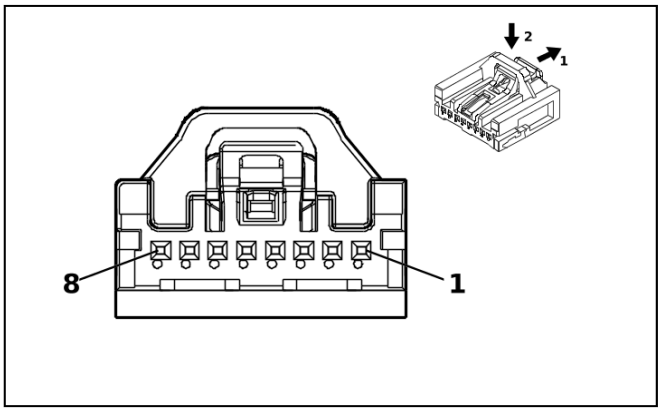

5200269

Connector Part Information

- Harness Type: Instrument Panel Wiring Harness
- OEM Connector: 35068228
- Service Connector: 84769201
- Description: 8-Way F Mini 50 Series(BK)

Terminal Part Information

Terminal Type ID	Terminated Lead	Diagnostic Test Probe	Terminal Removal Tool
I	Not required	EL-35616-58 (BK)	No Tool Required

K60 Column Lock Module

Pin	Size	Color	Circuit	Function	Terminal Type ID	Option
(1) 1	(1) 0.35	(1) RD / WH	(1) 6440	(1) Battery Positive Voltage	(1) I	(1) —
2	—	—	—	Not Occupied	—	—
(3) 3	(3) 0.35	(3) BK	(3) 1850	(3) Ground	(3) I	(3) —
(4) 4	(4) 0.35	(4) BU	(4) 4987	(4) AUTOSAR CAN Bus [+] 1 Serial Data	(4) I	(4) —
(5) 5	(5) 0.35	(5) BU	(5) 4987	(5) AUTOSAR CAN Bus [+] 1 Serial Data	(5) I	(5) —
(6) 6	(6) 0.35	(6) WH	(6) 4986	(6) AUTOSAR CAN Bus [-] 1 Serial Data	(6) I	(6) —

Pin	Size	Color	Circuit	Function	Terminal Type ID	Option
(7) 7	(7) 0.35	(7) WH	(7) 4986	(7) AUTOSAR CAN Bus [-] 1 Serial Data	(7) I	(7) —
(8) 8	(8) 0.35	(8) BU / VT	(8) 807	(8) Ignition Off/Accessory Ignition Voltage	(8) I	(8) —

K61 Sunroof Control Module (C3U)

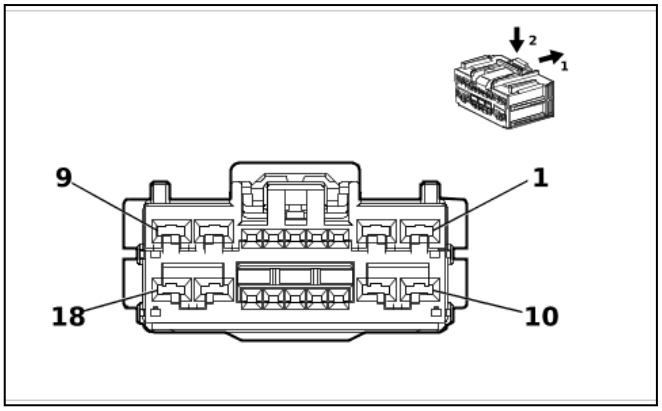

5671221

Connector Part Information

- Harness Type: Sunroof Wiring Harness
- OEM Connector: 7289-9550-30
- Service Connector: Service by Harness - See Part Catalog
- Description: 18-Way F 0.64 GEN-Y, 2.8 YESC Series(BK)

Terminal Part Information

Terminal Type ID	Terminated Lead	Diagnostic Test Probe	Terminal Removal Tool
I	Not required	J-35616-4A (PU)	No Tool Required
II	Not required	J-35616-64B (L-BU)	No Tool Required

K61 Sunroof Control Module (C3U)

Pin	Size	Color	Circuit	Function	Terminal Type ID	Option
1	—	—	—	Not Occupied	—	—
(2) 2	(2) 2	(2) BK	(2) 1050	(2) Ground	(2) I	(2) —
3 - 6	—	—	—	Not Occupied	—	—
(7) 7	(7) 0.35	(7) BU	(7) 2854	(7) Body Control Module LIN Bus 8	(7) II	(7) —
(8) 8	(8) 2	(8) BN	(8) 1050	(8) Ground	(8) I	(8) —
9	—	—	—	Not Occupied	—	—
(10) 10	(10) 2	(10) OG	(10) 4540	(10) Battery Positive Voltage	(10) I	(10) —
(11) 11	(11) 2	(11) RD	(11) 4540	(11) Battery Positive Voltage	(11) I	(11) —
(12) 12	(12) 0.35	(12) BK / BN	(12) 128	(12) Sunroof Switch Low Reference	(12) II	(12) —
(13) 13	(13) 0.35	(13) RD / WH	(13) 5033	(13) Sunroof Obstruction Sensor Voltage Reference	(13) II	(13) —
(14) 14	(14) 0.35	(14) VT	(14) 5124	(14) Sunroof Obstruction Sensor Signal 2	(14) II	(14) —

Pin	Size	Color	Circuit	Function	Terminal Type ID	Option
(15) 15	(15) 0.35	(15) YE	(15) 5034	(15) Sunroof Obstruction Sensor Signal 1	(15) II	(15) —
16	—	—	—	Not Occupied	—	—
(17) 17	(17) 1.5	(17) BU	(17) 3782	(17) Front Sunshade Motor Close Control	(17) I	(17) —
(18) 18	(18) 1.5	(18) PK	(18) 3781	(18) Front Sunroof Sunshade Motor Open Control	(18) I	(18) —

K67 Trailer Brake Control Module (JL1)

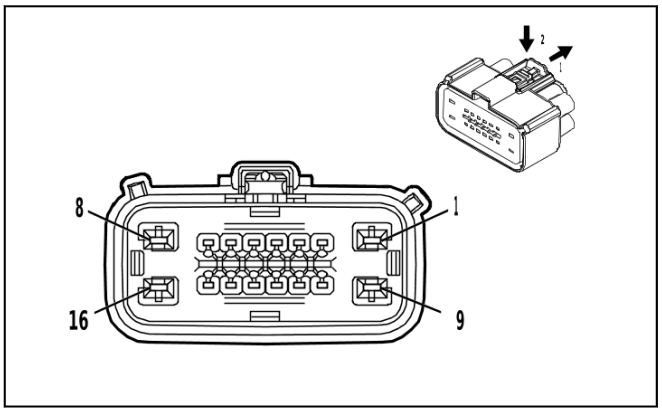

4624589

Connector Part Information

- Harness Type: Chassis Wiring Harness
- OEM Connector: 34985-4016
- Service Connector: 13599889
- Description: 16-Way F 1.5, 2.8 MX Series, Sealed(GY)

Terminal Part Information

Terminal Type ID	Terminated Lead	Diagnostic Test Probe	Terminal Removal Tool
I	13576377	J-35616-35 (VT)	J-38125-12A
II	85528055	J-35616-2A (GY)	J-38125-217

K67 Trailer Brake Control Module (JL1)

Pin	Size	Color	Circuit	Function	Terminal Type ID	Option
(1) 1	(1) 3	(1) RD / VT	(1) 1242	(1) Battery Positive Voltage	(1) I	(1) —
(2) 2	(2) 1.5	(2) WH / BK	(2) 2223	(2) Trailer Brake Apply Signal	(2) II	(2) —
3 - 4	—	—	—	Not Occupied	—	—
(5) 5	(5) 1.5	(5) YE / BK	(5) 2224	(5) Trailer Brake Enable Signal	(5) II	(5) —
6 - 7	—	—	—	Not Occupied	—	—
(8) 8	(8) 2.5	(8) BU	(8) 47	(8) Trailer Auxiliary Control	(8) I	(8) —
(9) 9	(9) 2.5	(9) BK	(9) 1950	(9) Ground	(9) I	(9) —
10 - 11	—	—	—	Not Occupied	—	—

Pin	Size	Color	Circuit	Function	Terminal Type ID	Option
(12) 12	(12) 0.75	(12) GN / BU	(12) 2733	(12) Brake System Control Module LIN Bus 2	(12) II	(12) —
13 - 16	—	—	—	Not Occupied	—	—

K68 Trailer Lamp Control Module (UET)

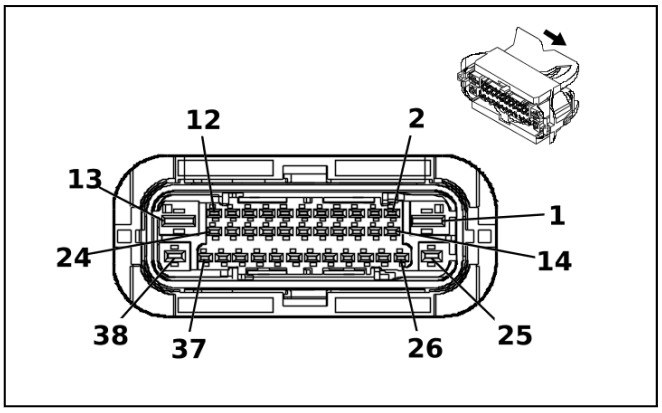

5199340

Connector Part Information

- Harness Type: Chassis Wiring Harness
- OEM Connector: 35497867
- Service Connector: 86825458
- Description: 38-Way F 1.5, 2.8, 4.8 MCP Series, Sealed(BK with BN Inner Connector)

Terminal Part Information

Terminal Type ID	Terminated Lead	Diagnostic Test Probe	Terminal Removal Tool
I	19368624	J-35616-35 (VT)	J-38125-557
II	19369235	J-35616-14 (GN)	EL-38125-560A
III	85158596	J-35616-40 (BU)	J-38125-556

K68 Trailer Lamp Control Module (UET)

Pin	Size	Color	Circuit	Function	Terminal Type ID	Option
(1) 1	(1) 3	(1) RD / VT	(1) 5640	(1) Battery Positive Voltage	(1) III	(1) —
(2) 2	(2) 0.75	(2) BU / WH	(2) 5186	(2) Left Trailer Turn Signal Lamp Control	(2) II	(2) —
(3) 3	(3) 0.75	(3) YE / GY	(3) 5187	(3) Right Trailer Turn Signal Lamp Control	(3) II	(3) —
4 - 6	—	—	—	Not Occupied	—	—
(7) 7	(7) 0.75	(7) GN / WH	(7) 5189	(7) Trailer Backup Lamp Control	(7) II	(7) —
8 - 9	—	—	—	Not Occupied	—	—
(10) 10	(10) 0.75	(10) VT / BK	(10) 339	(10) Run/Crank Ignition 1 Voltage	(10) II	(10) —
(11) 11	(11) 0.75	(11) BN / YE	(11) 820	(11) Center High Mounted Stop Lamp Supply Voltage	(11) II	(11) —
12	—	—	—	Not Occupied	—	—

Pin	Size	Color	Circuit	Function	Terminal Type ID	Option
(13) 13	(13) 2.5	(13) BK	(13) 2050	(13) Ground	(13) III	(13) —
14 - 24	—	—	—	Not Occupied	—	—
(25) 25	(25) 0.75	(25) BN / GY	(25) 5184	(25) Left Trailer Park Lamp Control	(25) I	(25) —
26	—	—	—	Not Occupied	—	—
(27) 27	(27) 0.5	(27) BU / VT	(27) 4101	(27) AUTOSAR CAN Bus [+] 4 Serial Data	(27) II	(27) —
(28) 28	(28) 0.5	(28) WH / GN	(28) 4100	(28) AUTOSAR CAN Bus [-] 4 Serial Data	(28) II	(28) —
(29) 29	(29) 0.5	(29) BU / VT	(29) 4101	(29) AUTOSAR CAN Bus [+] 4 Serial Data	(29) II	(29) —
(30) 30	(30) 0.5	(30) WH	(30) 4100	(30) AUTOSAR CAN Bus [-] 4 Serial Data	(30) II	(30) —
31 - 37	—	—	—	Not Occupied	—	—
(38) 38	(38) 2	(38) RD / YE	(38) 5840	(38) Battery Positive Voltage	(38) I	(38) —

K69 Transfer Case Control Module ((L84 / L87) & (NP0 / NQH))

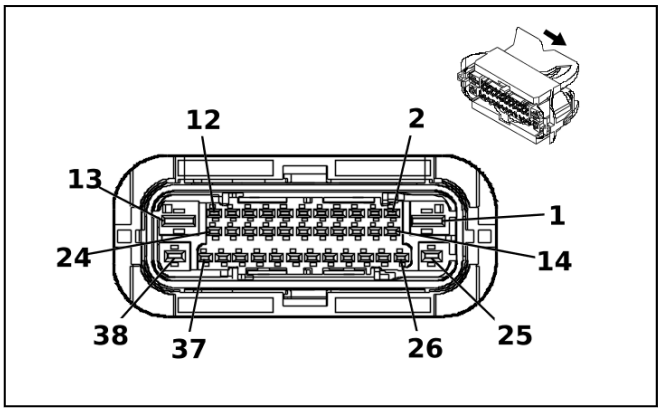

5199340

Connector Part Information

- Harness Type: Engine Wiring Harness
- OEM Connector: 35497867
- Service Connector: 86825458
- Description: 38-Way F 1.5, 2.8, 4.8 MCP Series, Sealed(BK with BN Inner Connector)

Terminal Part Information

Terminal Type ID	Terminated Lead	Diagnostic Test Probe	Terminal Removal Tool
I	19368624	J-35616-35 (VT)	J-38125-557
II	19369235	J-35616-14 (GN)	EL-38125-560A
III	85158596	J-35616-40 (BU)	J-38125-556

K69 Transfer Case Control Module ((L84 / L87) & (NP0 / NQH))

Pin	Size	Color	Circuit	Function	Terminal Type ID	Option
(1) 1	(1) 2.5	(1) RD / GY	(1) 1342	(1) Battery Positive Voltage	(1) III	(1) —
2	—	—	—	Not Occupied	—	—
(3) 3	(3) 0.5	(3) BU / YE	(3) 4979	(3) AUTOSAR CAN Bus [+] 2 Serial Data	(3) II	(3) —
(4) 4	(4) 0.5	(4) WH	(4) 4978	(4) AUTOSAR CAN Bus [-] 2 Serial Data	(4) II	(4) —
(5) 5	(5) 0.5	(5) WH / GN	(5) 7479	(5) Rotary Position Sensor Signal	(5) II	(5) —
6	—	—	—	Not Occupied	—	—
(7) 7	(7) 0.5	(7) YE	(7) 7474	(7) Incremental Encoder Direction Signal	(7) II	(7) —
8	—	—	—	Not Occupied	—	—
(9) 9	(9) 0.5	(9) YE / WH	(9) 1695	(9) 4WD Locked Range Indicator Control	(9) II	(9) —
10	—	—	—	Not Occupied	—	—
(11) 11	(11) 0.5	(11) VT / GY	(11) 8017	(11) Secondary Axle Motor Relay Control	(11) II	(11) —
(12) 12	(12) 0.5	(12) GY / BK	(12) 1570	(12) Front Axle Actuator Control	(12) II	(12) —
(13) 13	(13) 2.5	(13) YE / VT	(13) 1553	(13) Transfer Case Motor Counter Clockwise Control	(13) III	(13) —
14	—	—	—	Not Occupied	—	—
(15) 15	(15) 0.5	(15) BU / YE	(15) 4979	(15) AUTOSAR CAN Bus [+] 2 Serial Data	(15) II	(15) —
(16) 16	(16) 0.5	(16) WH	(16) 4978	(16) AUTOSAR CAN Bus [-] 2 Serial Data	(16) II	(16) —
17	—	—	—	Not Occupied	—	—
(18) 18	(18) 0.5	(18) VT / BK	(18) 2139	(18) Run/Crank Ignition 1 Voltage	(18) II	(18) —
(19) 19	(19) 0.5	(19) BU / GY	(19) 7473	(19) Incremental Encoder Impulse Signal	(19) II	(19) —
(20) 20	(20) 0.5	(20) WH / RD	(20) 7477	(20) Gear Position Sensor 5V Reference	(20) II	(20) —
21 - 23	—	—	—	Not Occupied	—	—
(24) 24	(24) 0.5	(24) BK	(24) 8015	(24) Transfer Case Motor Low Reference	(24) II	(24) —
(25) 25	(25) 2.5	(25) BK	(25) 6550	(25) Ground	(25) I	(25) —
26	—	—	—	Not Occupied	—	—
(27) 27	(27) 0.5	(27) BK	(27) 8014	(27) Transfer Case Lock Solenoid Low Reference	(27) II	(27) —
28 - 29	—	—	—	Not Occupied	—	—
(30) 30	(30) 0.5	(30) YE / BK	(30) 7478	(30) Gear Position Sensor Low Reference	(30) II	(30) —
(31) 31	(31) 0.5	(31) WH / GN	(31) 7475	(31) Incremental Encoder Sensor Voltage Reference	(31) II	(31) —
32	—	—	—	Not Occupied	—	—
(33) 33	(33) 0.5	(33) BU	(33) 8013	(33) Transfer Case Lock Solenoid Control 2	(33) II	(33) —
(34) 34	(34) 0.5	(34) YE / BN	(34) 1569	(34) Transfer Case Lock Solenoid Valve Control	(34) II	(34) —
35	—	—	—	Not Occupied	—	—

Pin	Size	Color	Circuit	Function	Terminal Type ID	Option
(36) 36	(36) 0.5	(36) VT	(36) 7476	(36) Incremental Encoder Sensor Low Reference	(36) II	(36) —
37	—	—	—	Not Occupied	—	—
(38) 38	(38) 2.5	(38) YE / GY	(38) 1552	(38) Transfer Case Motor Clockwise Control	(38) I	(38) —

K69 Transfer Case Control Module (LZ0 & (NP0 / NQH))

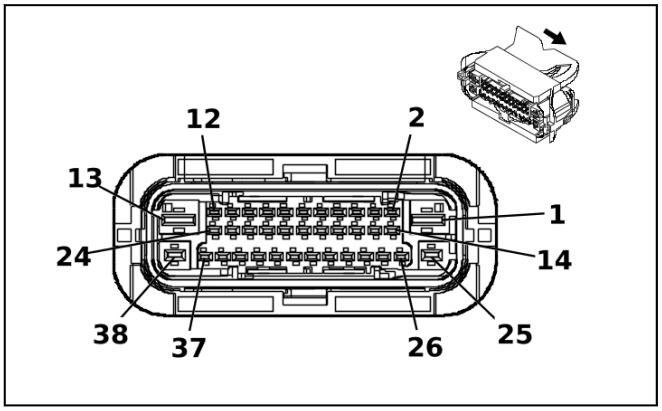

5199340

Connector Part Information
- Harness Type: Engine Wiring Harness
- OEM Connector: 35740703
- Service Connector: 86825458
- Description: 38-Way F 1.5, 2.8, 4.8 MCP Series, Sealed(BK with BN Inner Connector)

Terminal Part Information

Terminal Type ID	Terminated Lead	Diagnostic Test Probe	Terminal Removal Tool
I	19368624	J-35616-35 (VT)	J-38125-557
II	19369235	J-35616-14 (GN)	EL-38125-560A
III	85158596	J-35616-40 (BU)	J-38125-556

K69 Transfer Case Control Module (LZ0 & (NP0 / NQH))

Pin	Size	Color	Circuit	Function	Terminal Type ID	Option
(1) 1	(1) 2.5	(1) RD / GY	(1) 1342	(1) Battery Positive Voltage	(1) III	(1) —
2	—	—	—	Not Occupied	—	—
(3) 3	(3) 0.5	(3) BU / YE	(3) 4979	(3) AUTOSAR CAN Bus [+] 2 Serial Data	(3) II	(3) —
(4) 4	(4) 0.5	(4) WH	(4) 4978	(4) AUTOSAR CAN Bus [-] 2 Serial Data	(4) II	(4) —
(5) 5	(5) 0.5	(5) WH / GN	(5) 7479	(5) Rotary Position Sensor Signal	(5) II	(5) —
6	—	—	—	Not Occupied	—	—
(7) 7	(7) 0.5	(7) YE	(7) 7474	(7) Incremental Encoder Direction Signal	(7) II	(7) —
8	—	—	—	Not Occupied	—	—

Pin	Size	Color	Circuit	Function	Terminal Type ID	Option
(9) 9	(9) 0.5	(9) YE / WH	(9) 1695	(9) 4WD Locked Range Indicator Control	(9) II	(9) —
10	—	—	—	Not Occupied	—	—
(11) 11	(11) 0.5	(11) VT / GY	(11) 8017	(11) Secondary Axle Motor Relay Control	(11) II	(11) —
(12) 12	(12) 0.5	(12) GY / BK	(12) 1570	(12) Front Axle Actuator Control	(12) II	(12) —
(13) 13	(13) 2.5	(13) YE / VT	(13) 1553	(13) Transfer Case Motor Counter Clockwise Control	(13) III	(13) —
14	—	—	—	Not Occupied	—	—
(15) 15	(15) 0.5	(15) BU / YE	(15) 4979	(15) AUTOSAR CAN Bus [+] 2 Serial Data	(15) II	(15) —
(16) 16	(16) 0.5	(16) WH	(16) 4978	(16) AUTOSAR CAN Bus [-] 2 Serial Data	(16) II	(16) —
17	—	—	—	Not Occupied	—	—
(18) 18	(18) 0.5	(18) VT / BK	(18) 2139	(18) Run/Crank Ignition 1 Voltage	(18) II	(18) —
(19) 19	(19) 0.5	(19) BU / GY	(19) 7473	(19) Incremental Encoder Impulse Signal	(19) II	(19) —
(20) 20	(20) 0.5	(20) WH / RD	(20) 7477	(20) Gear Position Sensor 5V Reference	(20) II	(20) —
21 - 23	—	—	—	Not Occupied	—	—
(24) 24	(24) 0.5	(24) BK	(24) 8015	(24) Transfer Case Motor Low Reference	(24) II	(24) —
(25) 25	(25) 2.5	(25) BK	(25) 6550	(25) Ground	(25) I	(25) —
26	—	—	—	Not Occupied	—	—
(27) 27	(27) 0.5	(27) BK	(27) 8014	(27) Transfer Case Lock Solenoid Low Reference	(27) II	(27) —
28 - 29	—	—	—	Not Occupied	—	—
(30) 30	(30) 0.5	(30) YE / BK	(30) 7478	(30) Gear Position Sensor Low Reference	(30) II	(30) —
(31) 31	(31) 0.5	(31) WH / GN	(31) 7475	(31) Incremental Encoder Sensor Voltage Reference	(31) II	(31) —
32	—	—	—	Not Occupied	—	—
(33) 33	(33) 0.5	(33) BU	(33) 8013	(33) Transfer Case Lock Solenoid Control 2	(33) II	(33) —
(34) 34	(34) 0.5	(34) YE / BN	(34) 1569	(34) Transfer Case Lock Solenoid Valve Control	(34) II	(34) —
35	—	—	—	Not Occupied	—	—
(36) 36	(36) 0.5	(36) VT	(36) 7476	(36) Incremental Encoder Sensor Low Reference	(36) II	(36) —
37	—	—	—	Not Occupied	—	—
(38) 38	(38) 2.5	(38) YE / GY	(38) 1552	(38) Transfer Case Motor Clockwise Control	(38) I	(38) —

K71 Transmission Control Module

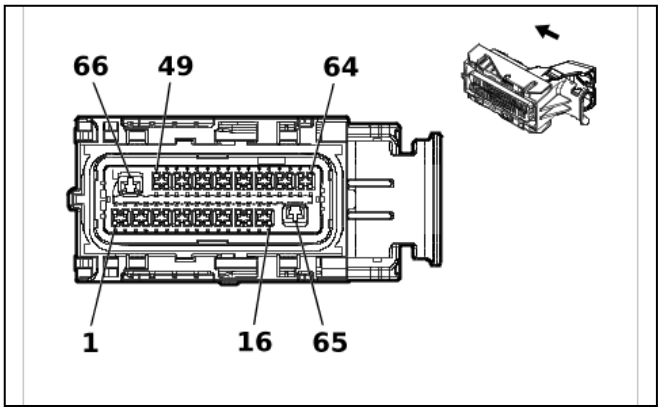

6608989

Connector Part Information

- Harness Type: Engine Wiring Harness
- OEM Connector: 216741-0002
- Service Connector: 85786014
- Description: 66-Way F 0.64, 2.8 Series, Sealed(BK with BK Terminal Position Assurance)

Terminal Part Information

Terminal Type ID	Terminated Lead	Diagnostic Test Probe	Terminal Removal Tool
I	13587518	J-35616-35 (VT)	J-38125-11A
II	19351723	J-35616-64B (L-BU)	J-38125-213

K71 Transmission Control Module

Pin	Size	Color	Circuit	Function	Terminal Type ID	Option
(1) 1	(1) 0.5	(1) VT / WH	(1) 422	(1) Torque Converter Clutch Solenoid Valve Control	(1) II	(1) —
(2) 2	(2) 0.5	(2) GY / GN	(2) 6403	(2) Clutch Solenoid Valve D Control	(2) II	(2) —
(3) 3	(3) 0.5	(3) WH / BU	(3) 4507	(3) Transmission Clutch H Control	(3) II	(3) —
(4) 4	(4) 0.5	(4) WH	(4) 4508	(4) Transmission Clutch G Control	(4) II	(4) —
(7) 7	(7) 0.5	(7) YE / GN	(7) 4170	(7) Transmission Output Shaft Speed Sensor Circuit 9V Reference	(7) II	(7) —
(8) 8	(8) 0.5	(8) YE / BU	(8) 4171	(8) Transmission Input Shaft Speed Sensor Circuit 9V Reference	(8) II	(8) —
(12) 12	(12) 0.5	(12) GN / YE	(12) 6353	(12) Input Speed Signal	(12) II	(12) —
(13) 13	(13) 0.5	(13) GN / VT	(13) 4510	(13) Transmission Intermediate Speed Signal	(13) II	(13) —
(14) 14	(14) 0.5	(14) GY / BU	(14) 6358	(14) Output Speed Signal	(14) II	(14) —
(15) 15	(15) 0.5	(15) BN / BU	(15) 6254	(15) Transmission Input Speed Sensor Signal	(15) II	(15) —
(17) 17	(17) 0.5	(17) GN / WH	(17) 1530	(17) Transmission Line Pressure Control Solenoid Valve Control	(17) II	(17) —
(18) 18	(18) 0.5	(18) YE / BN	(18) 6404	(18) Clutch Solenoid Valve E Control	(18) II	(18) —

Pin	Size	Color	Circuit	Function	Terminal Type ID	Option
(19) 19	(19) 0.5	(19) GY	(19) 6402	(19) Clutch Solenoid Valve C Control	(19) II	(19) —
(20) 20	(20) 0.5	(20) VT	(20) 4509	(20) Transmission Clutch F Control	(20) II	(20) —
(21) 21	(21) 0.5	(21) YE	(21) 2159	(21) Park Inhibit Solenoid Assembly Control	(21) II	(21) —
(22) 22	(22) 0.5	(22) GN / BK	(22) 7819	(22) Default Disable Solenoid Control	(22) II	(22) —
(24) 24	(24) 0.5	(24) GN	(24) 2968	(24) Transmission Auxiliary Fluid Pump Control	(24) II	(24) —
(28) 28	(28) 0.5	(28) BK / BN	(28) 586	(28) Transmission Fluid Temperature Sensor Low Reference	(28) II	(28) —
(31) 31	(31) 0.75	(31) GN / VT	(31) 4621	(31) Engine Control Module LIN Bus 1	(31) II	(31) —
(33) 33	(33) 0.5	(33) GN / GY	(33) 6387	(33) Transmission High Side Driver 1 Control	(33) II	(33) —
(35) 35	(35) 0.5	(35) VT / BK	(35) 2139	(35) Run/Crank Ignition 1 Voltage	(35) II	(35) —
(37) 37	(37) 0.5	(37) BU / YE	(37) 4979	(37) AUTOSAR CAN Bus [+] 2 Serial Data	(37) II	(37) —
(38) 38	(38) 0.5	(38) WH	(38) 4978	(38) AUTOSAR CAN Bus [-] 2 Serial Data	(38) II	(38) —
(49) 49	(49) 0.5	(49) GY / BN	(49) 6388	(49) Transmission High Side Driver 2 Control	(49) II	(49) —
(53) 53	(53) 0.5	(53) BU / YE	(53) 4979	(53) AUTOSAR CAN Bus [+] 2 Serial Data	(53) II	(53) —
(54) 54	(54) 0.5	(54) WH	(54) 4978	(54) AUTOSAR CAN Bus [-] 2 Serial Data	(54) II	(54) —
(59) 59	(59) 0.5	(59) VT / WH	(59) 6319	(59) Electronic Transmission Range Select Out of Park Switch 2 Signal	(59) II	(59) —
(61) 61	(61) 0.5	(61) WH / YE	(61) 6317	(61) Electronic Transmission Range Select Out of Park Switch Signal	(61) II	(61) —
(62) 62	(62) 0.5	(62) BN	(62) 3706	(62) Electronic Transmission Range Select Switch Analog Signal 1	(62) II	(62) —
(63) 63	(63) 0.5	(63) BN / WH	(63) 585	(63) Transmission Fluid Temperature Sensor Signal	(63) II	(63) —
(65) 65	(65) 1	(65) BK / WH	(65) 6151	(65) Engine Control Module Ground	(65) I	(65) —
(66) 66	(66) 1	(66) RD / GN	(66) 1840	(66) Battery Positive Voltage	(66) I	(66) —

K73 Telematic Control Module X1

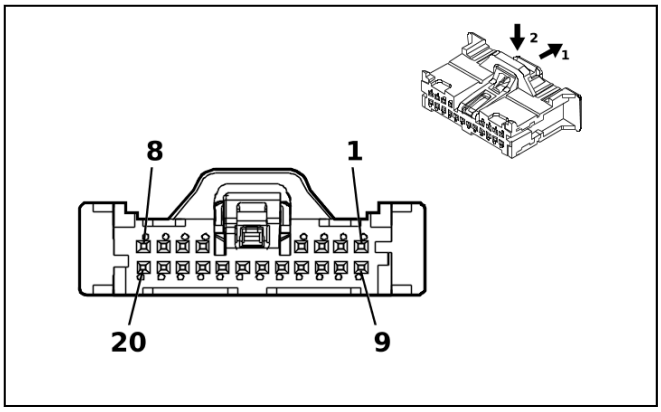

5200955

Connector Part Information

- Harness Type: Instrument Panel Wiring Harness
- OEM Connector: 35068196
- Service Connector: 84769280
- Description: 20-Way F Mini 50 Series(BK)

Terminal Part Information

Terminal Type ID	Terminated Lead	Diagnostic Test Probe	Terminal Removal Tool
I	84944580	EL-35616-58 (BK)	EL-38125-58

K73 Telematic Control Module X1

Pin	Size	Color	Circuit	Function	Terminal Type ID	Option
(1) 1	(1) 0.35	(1) RD / BU	(1) 3240	(1) Battery Positive Voltage	(1) I	(1) —
2	—	—	—	Not Occupied	—	—
(3) 3	(3) 0.35	(3) GN / BK	(3) 2515	(3) Telematics Switch Supply Voltage	(3) I	(3) —
(4) 4	(4) 0.35	(4) GN / WH	(4) 2514	(4) Telematics Switch Signal	(4) I	(4) —
(5) 5	(5) 0.35	(5) YE / VT	(5) 2516	(5) Telematics Switch Green LED Indicator Control	(5) I	(5) —
(6) 6	(6) 0.35	(6) BN / WH	(6) 2517	(6) Telematics Switch Red LED Indicator Control	(6) I	(6) —
(7) 7	(7) 0.35	(7) BU / WH	(7) 4985	(7) AUTOSAR CAN Bus [+] 5 Serial Data	(7) I	(7) —
(8) 8	(8) 0.35	(8) BU / YE	(8) 4984	(8) AUTOSAR CAN Bus [-] 5 Serial Data	(8) I	(8) —
(9) 9	(9) 0.35	(9) BK / WH	(9) 1451	(9) Signal Ground	(9) I	(9) —
10 - 18	—	—	—	Not Occupied	—	—
(19) 19	(19) 0.35	(19) BU / WH	(19) 4985	(19) AUTOSAR CAN Bus [+] 5 Serial Data	(19) I	(19) —
(20) 20	(20) 0.35	(20) BU / YE	(20) 4984	(20) AUTOSAR CAN Bus [-] 5 Serial Data	(20) I	(20) —

K73 Telematic Control Module X2

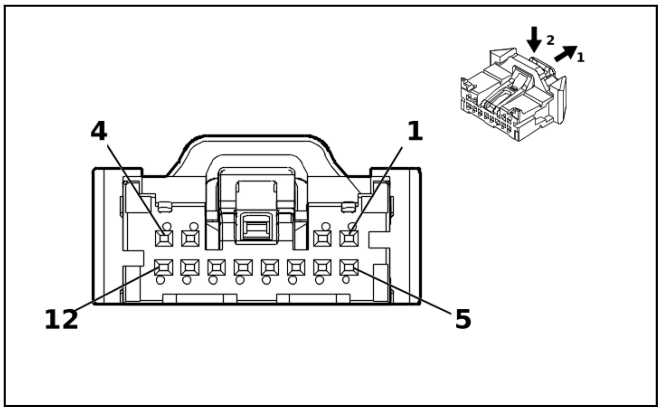

5360826

Connector Part Information

- Harness Type: Instrument Panel Wiring Harness
- OEM Connector: 35068239
- Service Connector: 13529935
- Description: 12-Way F 050 CTS Series(BK)

Terminal Part Information

Terminal Type ID	Terminated Lead	Diagnostic Test Probe	Terminal Removal Tool
I	84944580	EL-35616-58 (BK)	EL-38125-58

K73 Telematic Control Module X2

Pin	Size	Color	Circuit	Function	Terminal Type ID	Option
(1) 1	(1) 0.35	(1) GY / GN	(1) 4770	(1) Emergency Call Backup Speaker [+] Control	(1) I	(1) —
(2) 2	(2) 0.35	(2) WH / BK	(2) 4769	(2) Emergency Call Backup Speaker [-] Control	(2) I	(2) —
3 - 7	—	—	—	Not Occupied	—	—
(8) 8	(8) 0.35	(8) BU	(8) 655	(8) Cellular Telephone Microphone Signal	(8) I	(8) —
(9) 9	(9) 0.35	(9) BK / BN	(9) 654	(9) Cellular Telephone Microphone Low Reference	(9) I	(9) —
10 - 12	—	—	—	Not Occupied	—	—

K73 Telematic Control Module X3 (- UKL)

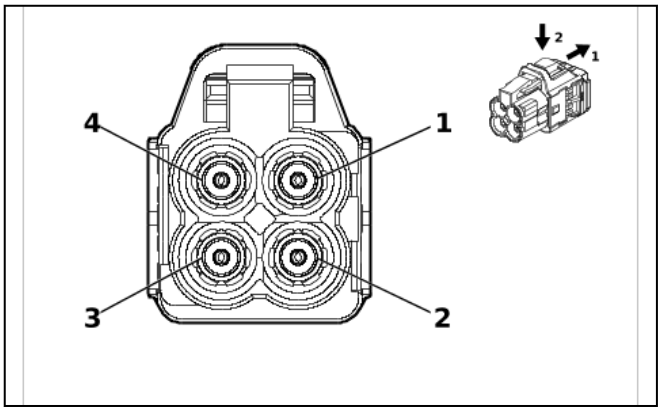

6186811

Connector Part Information

- Harness Type: Instrument Panel Wiring Harness COAX
- OEM Connector: AMZW25-000-C
- Service Connector: Service by Cable Assembly — See Part Catalog
- Description: 4-Way F Mini Coax Type(BU)

Terminal Part Information

Terminal Type ID	Terminated Lead	Diagnostic Test Probe	Terminal Removal Tool
I	Not required	No Tool Required	No Tool Required

K73 Telematic Control Module X3 (- UKL)

Pin	Size	Color	Circuit	Function	Terminal Type ID	Option
(1) 1	(1) 0.5	(1) Coax Cable	(1) 10314	(1) Global Navigation Satellite System Antenna Coaxial Signal	(1) I	(1) —
2	—	—	—	Not Occupied	—	—
(3) 3	(3) 0.5	(3) Coax Cable	(3) 10292	(3) Cell Phone Antenna 2 Coaxial Signal	(3) I	(3) —
(4) 4	(4) 0.5	(4) Coax Cable	(4) 6449	(4) Coaxial Antenna Cell Phone Signal	(4) I	(4) —

K73 Telematic Control Module X3 (UKL)

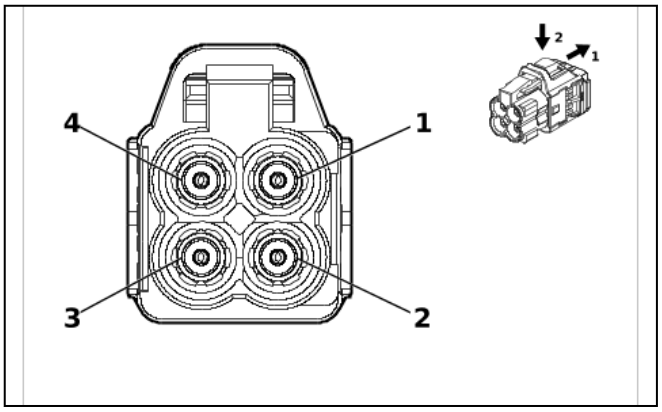

6002487

Connector Part Information

- Harness Type: Instrument Panel Wiring Harness COAX
- OEM Connector: 13544823
- Service Connector: Service by Cable Assembly — See Part Catalog
- Description: 4-Way F Mini Coax Type(GN)

Terminal Part Information

Terminal Type ID	Terminated Lead	Diagnostic Test Probe	Terminal Removal Tool
I	Not required	No Tool Required	No Tool Required

K73 Telematic Control Module X3 (UKL)

Pin	Size	Color	Circuit	Function	Terminal Type ID	Option
(1) 1	(1) 0.5	(1) Coax Cable	(1) 10314	(1) Global Navigation Satellite System Antenna Coaxial Signal	(1) I	(1) —
(3) 3	(3) 0.5	(3) Coax Cable	(3) 10292	(3) Cell Phone Antenna 2 Coaxial Signal	(3) I	(3) —
(4) 4	(4) 0.5	(4) Coax Cable	(4) 6449	(4) Coaxial Antenna Cell Phone Signal	(4) I	(4) —

K73 Telematic Control Module X7 (- (5W4 / 9C1))

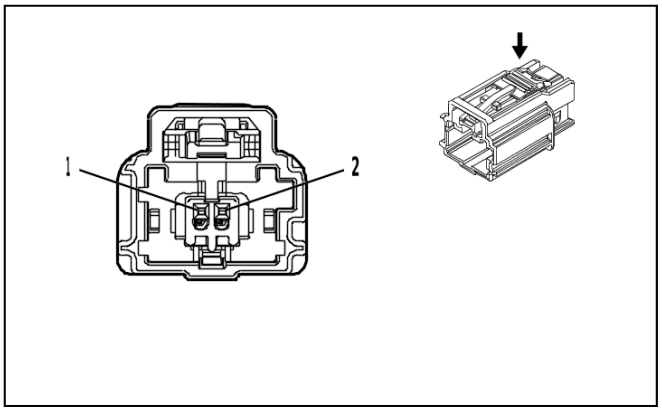

4942391

Connector Part Information
- Harness Type: Instrument Panel Wiring Harness
- OEM Connector: 13532867
- Service Connector: 13532867
- Description: 2-Way F 050 CTS Ethernet Series, Sealed(BK)

Terminal Part Information

Terminal Type ID	Terminated Lead	Diagnostic Test Probe	Terminal Removal Tool
I	Service by Cable	J-35616-64B (L-BU)	J-38125-215A

K73 Telematic Control Module X7 (- (5W4 / 9C1))

Pin	Size	Color	Circuit	Function	Terminal Type ID	Option
(1) 1	(1) 0.13	(1) WH	(1) 7211	(1) Ethernet Bus 4 [+]	(1) I	(1) —
(2) 2	(2) 0.13	(2) WH	(2) 7210	(2) Ethernet Bus 4 [-]	(2) I	(2) —

K73 Telematic Control Module X7 (5W4 / 9C1)

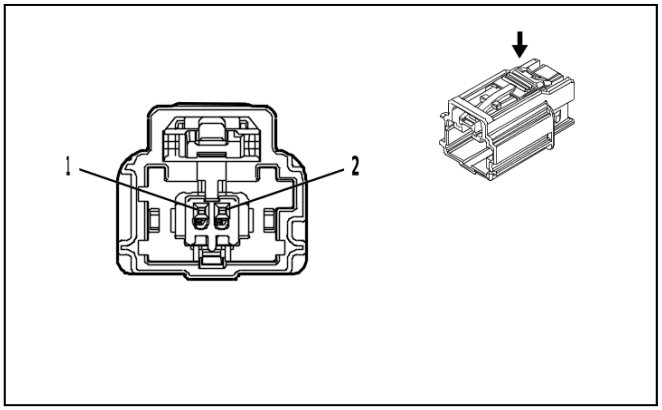

4942391

Connector Part Information
- Harness Type: Instrument Panel Wiring Harness
- OEM Connector: 35122188
- Service Connector: 13532867
- Description: 2-Way F 050 CTS Ethernet Series, Sealed(BK)

Terminal Part Information

Terminal Type ID	Terminated Lead	Diagnostic Test Probe	Terminal Removal Tool
I	Service by Cable	J-35616-64B (L-BU)	J-38125-215A

K73 Telematic Control Module X7 (5W4 / 9C1)

Pin	Size	Color	Circuit	Function	Terminal Type ID	Option
(1) 1	(1) 0.13	(1) GN	(1) 7211	(1) Ethernet Bus 4 [+]	(1) I	(1) —
(2) 2	(2) 0.13	(2) WH	(2) 7210	(2) Ethernet Bus 4 [-]	(2) I	(2) —

K77 Remote Function Actuator Module

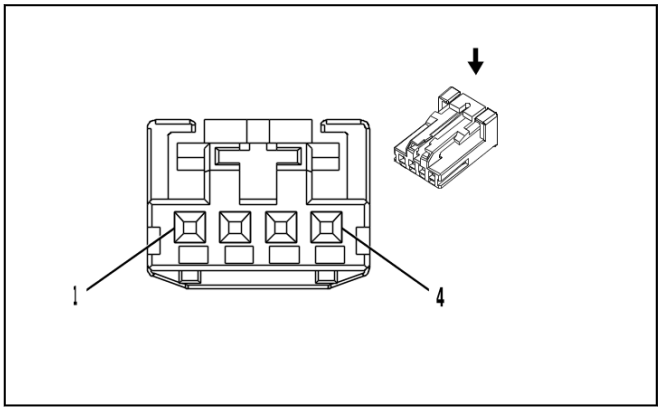

2717162

Connector Part Information

- Harness Type: Body Wiring Harness
- OEM Connector: 1-936119-1
- Service Connector: 19367524
- Description: 4-Way F 0.64 Micro-Quadlock Series(BK)

Terminal Part Information

Terminal Type ID	Terminated Lead	Diagnostic Test Probe	Terminal Removal Tool
I	Not required	J-35616-64B (L-BU)	No Tool Required

K77 Remote Function Actuator Module

Pin	Size	Color	Circuit	Function	Terminal Type ID	Option
(1) 1	(1) 0.5	(1) RD / VT	(1) 2640	(1) Battery Positive Voltage	(1) I	(1) —
(2) 2	(2) 0.5	(2) GN / YE	(2) 2862	(2) Body Control Module LIN Bus 16	(2) I	(2) —
3	—	—	—	Not Occupied	—	—
(4) 4	(4) 0.5	(4) BK / WH	(4) 1351	(4) Signal Ground	(4) I	(4) —

K85P Restraints Occupant Classification System Module - Passenger

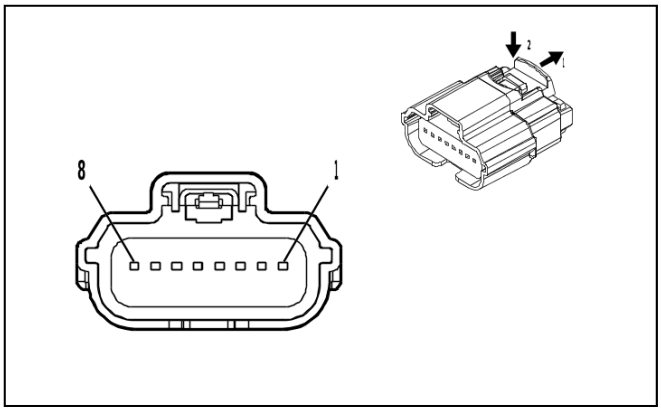

4708234

Connector Part Information

- Harness Type: Front Seat Wiring Harness - Passenger
- OEM Connector: 13526714
- Service Connector: Service by Harness - See Part Catalog
- Description: 8-Way F 64 Series, Sealed(BK)

Terminal Part Information

Terminal Type ID	Terminated Lead	Diagnostic Test Probe	Terminal Removal Tool
I	Not required	No Tool Required	No Tool Required

K85P Restraints Occupant Classification System Module - Passenger

Pin	Size	Color	Circuit	Function	Terminal Type ID	Option
(1) 1	(1) —	(1) RD / GN	(1) 4440	(1) Battery Positive Voltage	(1) I	(1) —
(2) 2	(2) —	(2) BU	(2) 4987	(2) AUTOSAR CAN Bus [+] 1 Serial Data	(2) I	(2) —
(3) 3	(3) —	(3) BU	(3) 4987	(3) AUTOSAR CAN Bus [+] 1 Serial Data	(3) I	(3) —
(4) 4	(4) —	(4) WH	(4) 4986	(4) AUTOSAR CAN Bus [-] 1 Serial Data	(4) I	(4) —
(5) 5	(5) —	(5) WH	(5) 4986	(5) AUTOSAR CAN Bus [-] 1 Serial Data	(5) I	(5) —
(6) 6	(6) —	(6) BK / WH	(6) 1351	(6) Signal Ground	(6) I	(6) —
(7) 7	(7) —	(7) OG / BN	(7) 3947	(7) Passenger Automatic Locking Retractor Switch Signal	(7) I	(7) —
(8) 8	(8) —	(8) GY / OG	(8) 3946	(8) Passenger Automatic Locking Retractor Switch Low Reference	(8) I	(8) —

K99 Steering Column Control Module X1 (N38)

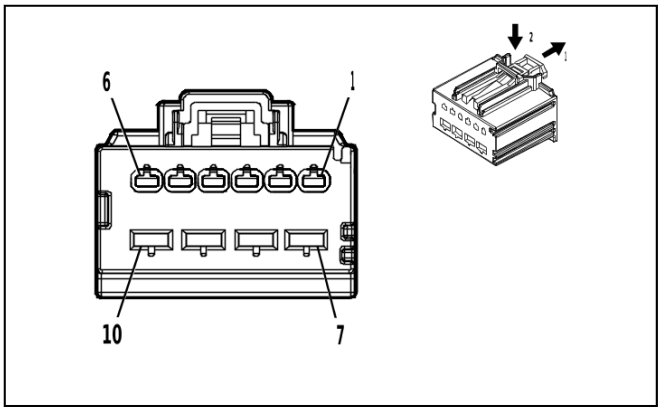

5035058

Connector Part Information

- Harness Type: Instrument Panel Wiring Harness
- OEM Connector: 31372-1600
- Service Connector: 13525907
- Description: 10-Way F 1.5, 2.8 MX Series(BK)

Terminal Part Information

Terminal Type ID	Terminated Lead	Diagnostic Test Probe	Terminal Removal Tool
I	19300432	J-35616-2A (GY)	J-38125-557
II	85544080	J-35616-4A (PU)	J-38125-11A

K99 Steering Column Control Module X1 (N38)

Pin	Size	Color	Circuit	Function	Terminal Type ID	Option
(1) 1	(1) 0.35	(1) VT / BK	(1) 2020	(1) Steering Column Tilt and Telescope Switch Feedback Signal	(1) I	(1) —
(2) 2	(2) 0.35	(2) GN / WH	(2) 7530	(2) Driver Seat Adjuster Memory Module LIN Bus 1	(2) I	(2) —
(3) 3	(3) 0.35	(3) GN / BN	(3) 2095	(3) Steering Column Tilt and Telescope Switch Rearward Signal	(3) I	(3) —
(4) 4	(4) 0.35	(4) BN / GY	(4) 2096	(4) Steering Column Tilt and Telescope Switch Up Signal	(4) I	(4) —
(5) 5	(5) 0.35	(5) YE / BN	(5) 2097	(5) Steering Column Tilt and Telescope Switch Down Signal	(5) I	(5) —
(6) 6	(6) 0.35	(6) BU / YE	(6) 2094	(6) Steering Column Tilt and Telescope Switch Forward Signal	(6) I	(6) —
(7) 7	(7) 1	(7) RD / VT	(7) 4640	(7) Battery Positive Voltage	(7) II	(7) —
(8) 8	(8) 1	(8) BK	(8) 1850	(8) Ground	(8) II	(8) —
9 - 10	—	—	—	Not Occupied	—	—

K99 Steering Column Control Module X2 (N38)

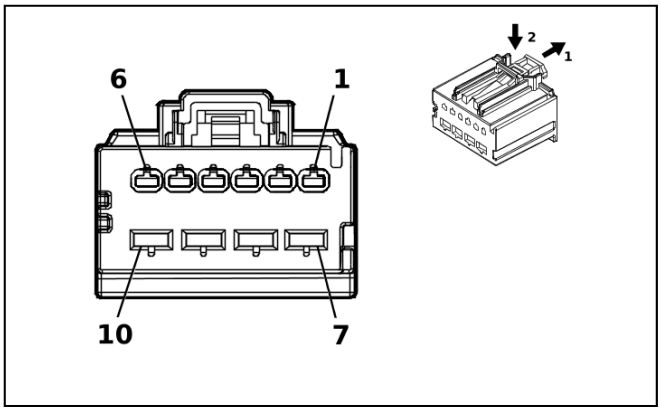

5190551

Connector Part Information

- Harness Type: Steering Column Tilt and Telescope Wheel Actuator Motor Harness
- OEM Connector: 31372-1700
- Service Connector: Service by Harness - See Part Catalog
- Description: 10-Way F 1.5, 2.8 MX Series(GY)

Terminal Part Information

Terminal Type ID	Terminated Lead	Diagnostic Test Probe	Terminal Removal Tool
I	Not required	No Tool Required	No Tool Required

K99 Steering Column Control Module X2 (N38)

Pin	Size	Color	Circuit	Function	Terminal Type ID	Option
(1) 1	(1) 0.35	(1) YE	(1) 2153	(1) Steering Column Telescope Motor Signal	(1) I	(1) —
(2) 2	(2) 0.35	(2) WH	(2) 2152	(2) Steering Column Telescope Motor Low Reference	(2) I	(2) —
(3) 3	(3) 0.35	(3) BN	(3) 2154	(3) Steering Column Tilt Motor Signal	(3) I	(3) —
(4) 4	(4) 0.35	(4) BU	(4) 2157	(4) Steering Column Tilt Motor Low Reference	(4) I	(4) —
5 - 6	—	—	—	Not Occupied	—	—
(7) 7	(7) 1	(7) GN	(7) 2098	(7) Steering Column Telescope Motor Forward Control	(7) I	(7) —
(8) 8	(8) 1	(8) RD	(8) 2110	(8) Steering Column Telescope Motor Rearward Control	(8) I	(8) —
(9) 9	(9) 1	(9) OG	(9) 2112	(9) Steering Column Tilt Motor Down Control	(9) I	(9) —
(10) 10	(10) 1	(10) VT	(10) 2111	(10) Steering Column Tilt Motor Up Control	(10) I	(10) —

K104DP Front Seat Bladder Control Module - Driver Primary (AVK)

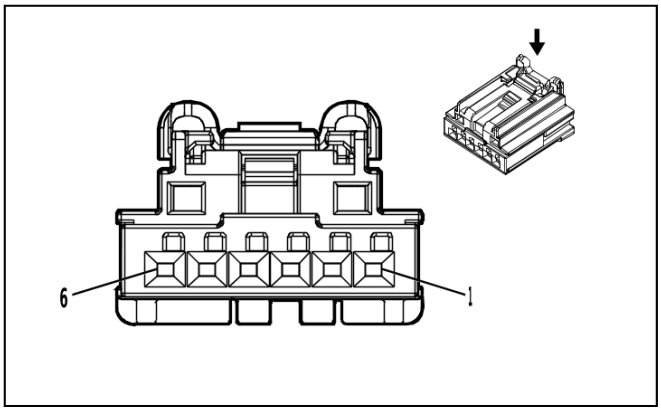

5020940

Connector Part Information

- Harness Type: Front Seat Wiring Harness - Driver
- OEM Connector: 13583827
- Service Connector: Service by Harness - See Part Catalog
- Description: 6-Way F 0.64 Generation Y Series(BK)

Terminal Part Information

Terminal Type ID	Terminated Lead	Diagnostic Test Probe	Terminal Removal Tool
I	Not required	No Tool Required	No Tool Required

K104DP Front Seat Bladder Control Module - Driver Primary (AVK)

Pin	Size	Color	Circuit	Function	Terminal Type ID	Option
(1) 1	(1) —	(1) RD / BN	(1) 2240	(1) Battery Positive Voltage	(1) I	(1) —
(2) 2	(2) —	(2) GN / GY	(2) 3758	(2) Driver Seat Adjuster Memory Module LIN Bus 2	(2) I	(2) —
(3) 3	(3) —	(3) WH / BU	(3) 4891	(3) Driver Seat Lumbar/Bolster Pump Control	(3) I	(3) —
(4) 4	(4) —	(4) BK	(4) 1150	(4) Ground	(4) I	(4) —
(5) 5	(5) —	(5) BN / BK	(5) 2305	(5) Driver Seat Bolster Pump Low Reference	(5) I	(5) —
6	—	—	—	Not Occupied	—	—

K104P Front Seat Bladder Control Module - Passenger (AVU)

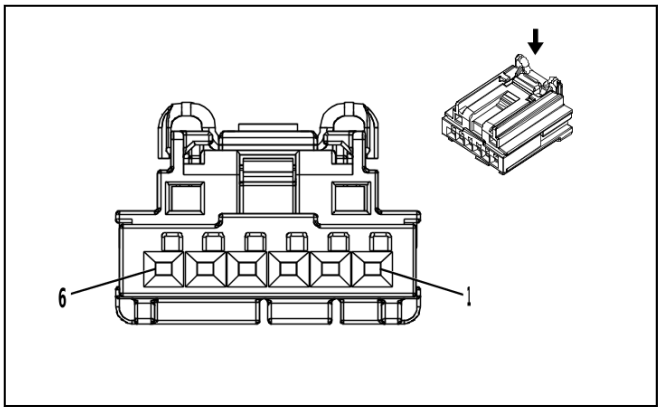

3960313

Connector Part Information

- Harness Type: Front Seat Wiring Harness - Passenger
- OEM Connector: 13583825
- Service Connector: Service by Harness - See Part Catalog
- Description: 6-Way F 0.64 Generation Y Series(BK)

Terminal Part Information

Terminal Type ID	Terminated Lead	Diagnostic Test Probe	Terminal Removal Tool
I	Not required	No Tool Required	No Tool Required

K104P Front Seat Bladder Control Module - Passenger (AVU)

Pin	Size	Color	Circuit	Function	Terminal Type ID	Option
(1) 1	(1) —	(1) RD / BU	(1) 3940	(1) Battery Positive Voltage	(1) I	(1) —
2	—	—	—	Not Occupied	—	—
(3) 3	(3) —	(3) GY / WH	(3) 4890	(3) Passenger Seat Lumbar/Bolster Pump Control	(3) I	(3) —
(4) 4	(4) —	(4) BK	(4) 1250	(4) Ground	(4) I	(4) —
(5) 5	(5) —	(5) BK / WH	(5) 2194	(5) Passenger Seat Position Switch Low Reference	(5) I	(5) —
(6) 6	(6) —	(6) BK / GN	(6) 1068	(6) Passenger Seat Lumbar Support Switch Analog Signal	(6) I	(6) —

K111 Fuel Pump Power Control Module

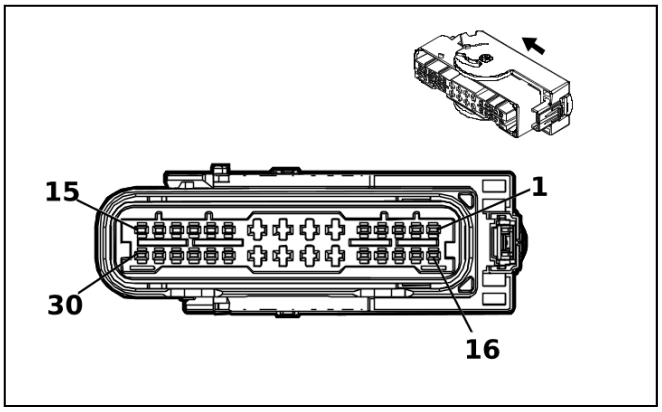

3240109

Connector Part Information

- Harness Type: Chassis Wiring Harness
- OEM Connector: 5-2109446-7
- Service Connector: 86545828
- Description: 30-Way F 1.5, 2.8 MCP Series, Sealed(BK)

Terminal Part Information

Terminal Type ID	Terminated Lead	Diagnostic Test Probe	Terminal Removal Tool
I	19329958	J-35616-2A (GY)	J-38125-217
II	19371214	J-35616-35 (VT)	J-38125-556

K111 Fuel Pump Power Control Module

Pin	Size	Color	Circuit	Function	Terminal Type ID	Option
1	—	—	—	Not Occupied	—	—
(2) 2	(2) 0.5	(2) BU / YE	(2) 6861	(2) Water In Fuel Sensor Signal	(2) I	(2) —
(3) 3	(3) 0.5	(3) BK / BU	(3) 6863	(3) Water In Fuel Sensor Low Reference	(3) I	(3) —
(4) 4	(4) 0.5	(4) BN / GY	(4) 7072	(4) Fuel Temperature Sensor 1 Signal	(4) I	(4) —
5 - 6	—	—	—	Not Occupied	—	—
(7) 7	(7) 2.5	(7) RD / VT	(7) 1940	(7) Battery Positive Voltage	(7) II	(7) —
(8) 8	(8) 2.5	(8) GY	(8) 120	(8) Fuel Pump Control	(8) II	(8) —
(9) 9	(9) 2.5	(9) YE / GY	(9) 4137	(9) Fuel Pump Supply Voltage Phase 2	(9) II	(9) —
(10) 10	(10) 0.5	(10) YE / RD	(10) 2709	(10) Fuel Tank Pressure Sensor 5V Reference	(10) I	(10) —
(11) 11	(11) 0.5	(11) BU	(11) 890	(11) Fuel Tank Pressure Sensor Signal	(11) I	(11) —
(12) 12	(12) 0.5	(12) BN / RD	(12) 7445	(12) Fuel Line Pressure Sensor 5V Reference	(12) I	(12) —
(13) 13	(13) 0.5	(13) BU / GN	(13) 1936	(13) Primary Fuel Level Sensor Signal	(13) I	(13) —
14	—	—	—	Not Occupied	—	—
(15) 15	(15) 0.5	(15) BU / GY	(15) 4054	(15) Private Serial Data Powertrain CAN Bus [-] Serial Data	(15) I	(15) —

Pin	Size	Color	Circuit	Function	Terminal Type ID	Option
(16) 16	(16) 0.5 (16) 0.75	(16) VT / GN (16) VT / GN	(16) 4320 (16) 4320	(16) Powertrain Sensor Bus Enable (16) Powertrain Sensor Bus Enable	(16) I (16) I	(16) L84/ L87 (16) LZ0
17	—	—	—	Not Occupied	—	—
(18) 18	(18) 0.5	(18) GN / GY	(18) 465	(18) Fuel Pump Primary Relay Control	(18) I	(18) —
(19) 19	(19) 0.5	(19) BN / WH	(19) 7073	(19) Fuel Temperature Sensor 1 Low Reference	(19) I	(19) —
20	—	—	—	Not Occupied	—	—
(21) 21	(21) 0.5	(21) WH	(21) 1310	(21) EVAP Vent Solenoid Valve Control	(21) II	(21) —
(22) 22	(22) 2.5	(22) BK	(22) 1950	(22) Ground	(22) II	(22) —
(23) 23	(23) 0.5	(23) BK	(23) 7444	(23) Fuel Pump Assembly Shield Ground	(23) II	(23) —
(24) 24	(24) 2.5	(24) WH / BN	(24) 4138	(24) Fuel Pump Supply Voltage Phase 3	(24) II	(24) —
(25) 25	(25) 0.5	(25) BK / BN	(25) 6284	(25) Fuel Tank Pressure Sensor Low Reference	(25) I	(25) —
(26) 26	(26) 0.5	(26) BU / WH	(26) 7446	(26) Fuel Pressure Sensor Signal	(26) I	(26) —
(27) 27	(27) 0.5	(27) BK / YE	(27) 7447	(27) Fuel Pressure Sensor Low Reference	(27) I	(27) —
(28) 28	(28) 0.5	(28) BK / GN	(28) 6281	(28) Fuel Level Sensor Low Reference	(28) I	(28) —
29	—	—	—	Not Occupied	—	—
(30) 30	(30) 0.5	(30) WH	(30) 4055	(30) Private Serial Data Powertrain CAN Bus [+] Serial Data	(30) I	(30) —

K115 Reductant Control Module (LZ0)

—

Connector Part Information

- Harness Type: Emission Reduction Fluid Tank Reservoir Wire Harness
- OEM Connector: 35202510
- Service Connector: Service by Harness - See Part Catalog
- Description: 26-Way

Terminal Part Information

Terminal Type ID	Terminated Lead	Diagnostic Test Probe	Terminal Removal Tool
I	Not required	No Tool Required	No Tool Required

K115 Reductant Control Module (LZ0)

Pin	Size	Color	Circuit	Function	Terminal Type ID	Option
(1) 1	(1) — (1) —	(1) BK (1) BK / WH	(1) 3440 (1) 3440	(1) Battery Positive Voltage (1) Battery Positive Voltage	(1) I (1) I	(1) — (1) —
(2) 2	(2) —	(2) BN	(2) 3676	(2) Diesel Exhaust Fluid Heating Tank 2 Heater Control	(2) I	(2) —

Pin	Size	Color	Circuit	Function	Terminal Type ID	Option
(4) 4	(4) —	(4) YE	(4) 3677	(4) Diesel Exhaust Fluid Reservoir Heater Control	(4) I	(4) —
(6) 6	(6) —	(6) BK	(6) 3244	(6) Diesel Exhaust Fluid Tank Temperature Sensor Signal	(6) I	(6) —
(7) 7	(7) —	(7) BK	(7) 7290	(7) Diesel Exhaust Fluid Sensor Voltage Reference 1	(7) I	(7) —
(8) 8	(8) —	(8) BN	(8) 7284	(8) Diesel Exhaust Fluid Liquid Quality Temperature Signal	(8) I	(8) —
(9) 9	(9) —	(9) BK	(9) 8434	(9) Diesel Exhaust Fluid Sensor Low Reference	(9) I	(9) —
(11) 11	(11) —	(11) YE	(11) 3876	(11) Diesel Exhaust Fluid Smart Pump Supply Voltage Phase 3	(11) I	(11) —
(13) 13	(13) —	(13) WH	(13) 1650	(13) Ground	(13) I	(13) —
(14) 14	(14) —	(14) BN	(14) 2936	(14) Diesel Exhaust Fluid Heating Tank 2 Heater Control Low	(14) I	(14) —
(16) 16	(16) —	(16) BU	(16) 4318	(16) Diesel Exhaust Fluid Tank Heater Low Control	(16) I	(16) —
(18) 18	(18) —	(18) BN	(18) 3245	(18) Diesel Exhaust Fluid Tank Temperature Sensor Low Reference	(18) I	(18) —
(19) 19	(19) —	(19) BN	(19) 3106	(19) Diesel Exhaust Fluid Pressure Sensor 5 Volt Reference	(19) I	(19) —
(20) 20	(20) —	(20) BU	(20) 3108	(20) Diesel Exhaust Fluid Pressure Sensor Signal	(20) I	(20) —
(21) 21	(21) —	(21) BU	(21) 3107	(21) Diesel Exhaust Fluid Pressure Sensor Low Reference	(21) I	(21) —
(24) 24	(24) —	(24) BN	(24) 3875	(24) Diesel Exhaust Fluid Smart Pump Supply Voltage Phase 2	(24) I	(24) —
(26) 26	(26) —	(26) WH	(26) 3199	(26) Diesel Exhaust Fluid Pressure Line Heater Control	(26) I	(26) —
(28) 28	(28) —	(28) BN	(28) 4319	(28) Diesel Exhaust Fluid Line Heater Low Control	(28) I	(28) —
(30) 30	(30) — (30) —	(30) BN (30) VT / BK	(30) 2139 (30) 2139	(30) Run/Crank Ignition 1 Voltage (30) Run/Crank Ignition 1 Voltage	(30) I (30) I	(30) — (30) —
(31) 31	(31) —	(31) BU	(31) 4987	(31) AUTOSAR CAN Bus [+] 1 Serial Data	(31) I	(31) —
(32) 32	(32) —	(32) BU	(32) 4987	(32) AUTOSAR CAN Bus [+] 1 Serial Data	(32) I	(32) —
(33) 33	(33) — (33) —	(33) WH (33) BN	(33) 4986 (33) 4986	(33) AUTOSAR CAN Bus [-] 1 Serial Data (33) AUTOSAR CAN Bus [-] 1 Serial Data	(33) I (33) I	(33) — (33) —
(34) 34	(34) —	(34) BN	(34) 4986	(34) AUTOSAR CAN Bus [-] 1 Serial Data	(34) I	(34) —
(36) 36	(36) —	(36) BU	(36) 2937	(36) Diesel Exhaust Fluid Pump Motor Stator Low Reference	(36) I	(36) —
(37) 37	(37) —	(37) WH	(37) 3103	(37) Diesel Exhaust Fluid Smart Pump Control	(37) I	(37) —
(38) 38	(38) — (38) —	(38) RD / WH (38) RD	(38) 2040 (38) 2040	(38) Battery Positive Voltage (38) Battery Positive Voltage	(38) I (38) I	(38) — (38) —

K124 Image Processing Module X1 (UKL)

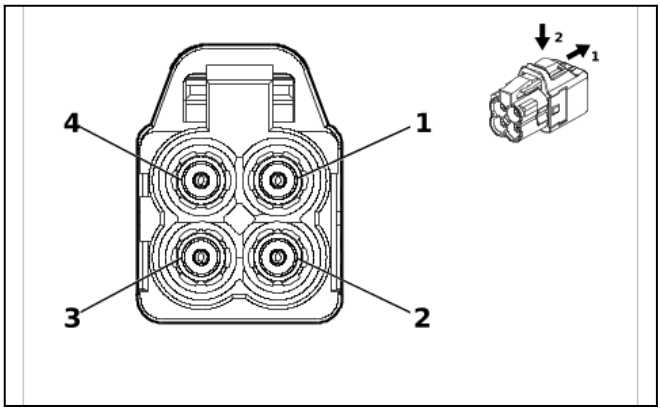

5835118

Connector Part Information
- Harness Type: Body Wiring Harness COAX
- OEM Connector: 35520546
- Service Connector: Service by Cable Assembly — See Part Catalog
- Description: 4-Way F Mini Coax Type(BK)

Terminal Part Information

Terminal Type ID	Terminated Lead	Diagnostic Test Probe	Terminal Removal Tool
I	Not required	No Tool Required	No Tool Required

K124 Image Processing Module X1 (UKL)

Pin	Size	Color	Circuit	Function	Terminal Type ID	Option
1 - 3	—	—	—	Not Occupied	—	—
(4) 4	(4) 0.4	(4) Coax Cable	(4) 4723	(4) Video Processing Module LVDS (Low Voltage Differential Signaling) Coaxial Signal	(4) I	(4) —

K124 Image Processing Module X2 (UKL)

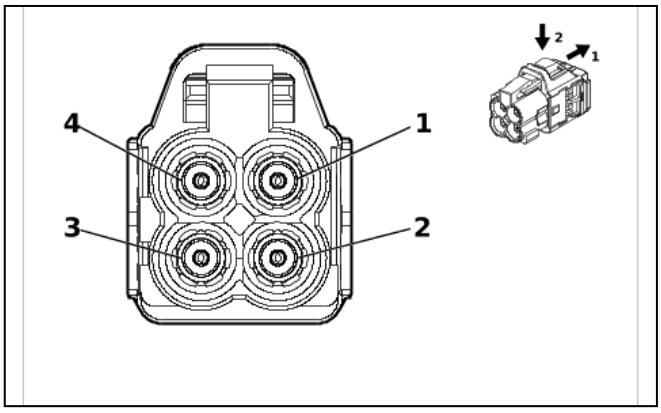

5925514

Connector Part Information
- Harness Type: Body Wiring Harness COAX
- OEM Connector: 13544822
- Service Connector: Service by Cable Assembly — See Part Catalog
- Description: 4-Way F Mini Coax Type(VT)

Terminal Part Information

Terminal Type ID	Terminated Lead	Diagnostic Test Probe	Terminal Removal Tool
I	Not required	No Tool Required	No Tool Required

K124 Image Processing Module X2 (UKL)

Pin	Size	Color	Circuit	Function	Terminal Type ID	Option
(1) 1	(1) 0.4	(1) Coax Cable	(1) 4722	(1) Frontview Camera LVDS (Low Voltage Differential Signaling) Coaxial Signal	(1) I	(1) —
(2) 2	(2) 0.4	(2) Coax Cable	(2) 4725	(2) Left Sideview Camera LVDS (Low Voltage Differential Signaling) Coaxial Signal	(2) I	(2) —
(3) 3	(3) 0.4	(3) Coax Cable	(3) 4724	(3) Right Sideview Camera LVDS (Low Voltage Differential Signaling) Coaxial Signal	(3) I	(3) —
(4) 4	(4) 0.4	(4) Coax Cable	(4) 4721	(4) Rearview Camera LVDS (Low Voltage Differential Signaling) Coaxial Signal	(4) I	(4) —

K124 Image Processing Module X3 (UKL)

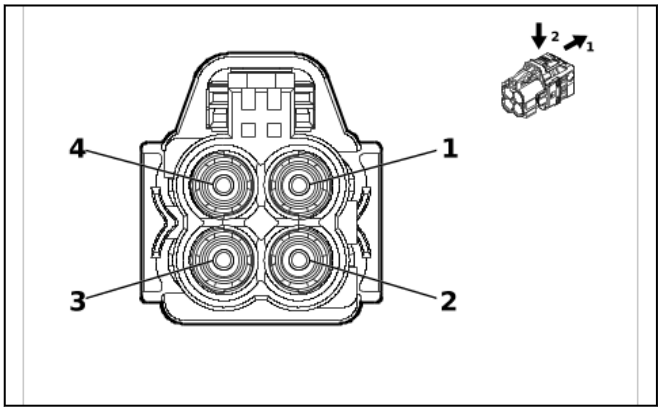

5903560

Connector Part Information

- Harness Type: Body Wiring Harness
- OEM Connector: AMZW25-000-B
- Service Connector: Service by Cable Assembly — See Part Catalog
- Description: 4-Way F Mini Coax Type(WH)

Terminal Part Information

Terminal Type ID	Terminated Lead	Diagnostic Test Probe	Terminal Removal Tool
I	Not required	No Tool Required	No Tool Required

K124 Image Processing Module X3 (UKL)

Pin	Size	Color	Circuit	Function	Terminal Type ID	Option
1 - 2	—	—	—	Not Occupied	—	—
(3) 3	(3) 0.4	(3) BARE	(3) 4726	(3) Driver Monitoring System Camera LVDS (Low Voltage Differential Signaling) Coaxial Signal	(3) I	(3) —
4	—	—	—	Not Occupied	—	—

K124 Image Processing Module X6 (UKL)

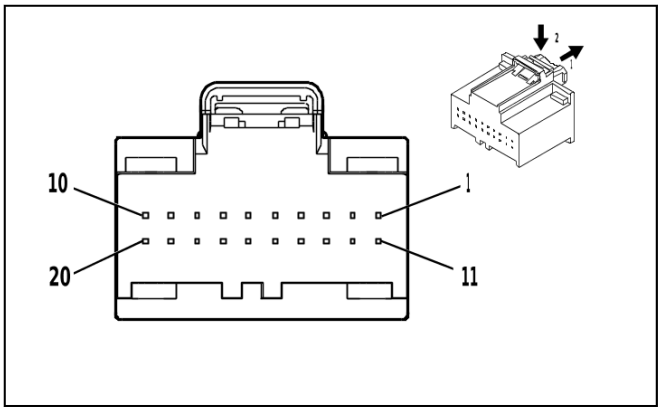

5109511

Connector Part Information

- Harness Type: Body Wiring Harness
- OEM Connector: 31410-0208
- Service Connector: 13525993
- Description: 20-Way F 0.64 Series(GN)

Terminal Part Information

Terminal Type ID	Terminated Lead	Diagnostic Test Probe	Terminal Removal Tool
I	13584547	J-35616-64B (L-BU)	J-38125-215A
II	Service by Cable	J-35616-64B (L-BU)	J-38125-215A

K124 Image Processing Module X6 (UKL)

Pin	Size	Color	Circuit	Function	Terminal Type ID	Option
(1) 1	(1) 0.35	(1) WH	(1) 4978	(1) AUTOSAR CAN Bus [-] 2 Serial Data	(1) I	(1) —
(2) 2	(2) 0.35	(2) WH	(2) 4978	(2) AUTOSAR CAN Bus [-] 2 Serial Data	(2) I	(2) —
(3) 3	(3) 0.35	(3) BU / YE	(3) 4979	(3) AUTOSAR CAN Bus [+] 2 Serial Data	(3) I	(3) —
(4) 4	(4) 0.35	(4) BU / YE	(4) 4979	(4) AUTOSAR CAN Bus [+] 2 Serial Data	(4) I	(4) —
(5) 5	(5) 0.35	(5) WH	(5) 4978	(5) AUTOSAR CAN Bus [-] 2 Serial Data	(5) I	(5) —
(6) 6	(6) 0.35	(6) BU / YE	(6) 4979	(6) AUTOSAR CAN Bus [+] 2 Serial Data	(6) I	(6) —
7 - 8	—	—	—	Not Occupied	—	—
(9) 9	(9) 0.35	(9) BN / WH	(9) 7209	(9) Ethernet Bus 3 [+]	(9) II	(9) —
(10) 10	(10) 0.35	(10) BN	(10) 7208	(10) Ethernet Bus 3 [-]	(10) II	(10) —
(11) 11	(11) 0.35	(11) WH	(11) 8976	(11) Private Serial Data Active Safety CAN Bus [-] Serial Data	(11) II	(11) —
(12) 12	(12) 0.35	(12) BU	(12) 8977	(12) Private Serial Data Active Safety CAN Bus [+] Serial Data	(12) II	(12) —
(13) 13	(13) 0.5	(13) WH / GY	(13) 4104	(13) AUTOSAR CAN Bus [-] 8 Serial Data	(13) I	(13) —
(14) 14	(14) 0.5	(14) BU / GY	(14) 4105	(14) AUTOSAR CAN Bus [+] 8 Serial Data	(14) I	(14) —
15 - 20	—	—	—	Not Occupied	—	—

K124 Image Processing Module X7 (UKL)

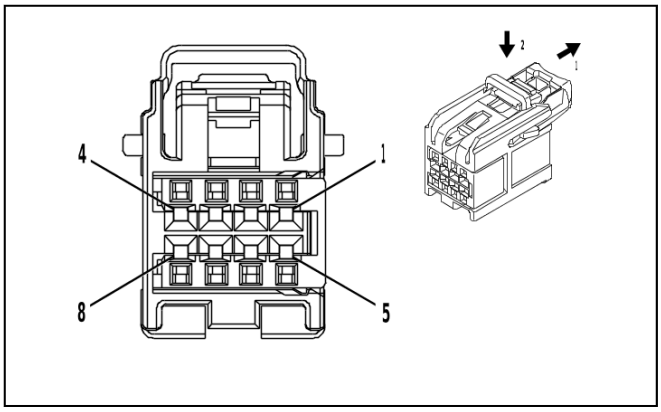

4232228

Connector Part Information

- Harness Type: Body Wiring Harness
- OEM Connector: 15526973
- Service Connector: 19353873
- Description: 8-Way F 0.64 OCS Series(GY)

Terminal Part Information

Terminal Type ID	Terminated Lead	Diagnostic Test Probe	Terminal Removal Tool
I	Not required	J-35616-12 (BU)	No Tool Required
II	Not required	J-35616-64B (L-BU)	No Tool Required

K124 Image Processing Module X7 (UKL)

Pin	Size	Color	Circuit	Function	Terminal Type ID	Option
1	—	—	—	Not Occupied	—	—
(2) 2	(2) 0.5	(2) WH	(2) 4976	(2) AUTOSAR CAN Bus [-] 3 Serial Data	(2) II	(2) —
(3) 3	(3) 0.5	(3) BU / BK	(3) 4977	(3) AUTOSAR CAN Bus [+] 3 Serial Data	(3) II	(3) —
4	—	—	—	Not Occupied	—	—
(5) 5	(5) 0.5	(5) VT / GY	(5) 8978	(5) Inertial Sensor Supply Voltage	(5) II	(5) —
(6) 6	(6) 0.35	(6) GN / GY	(6) 11023	(6) Image Processing Module LIN Bus 1	(6) I	(6) —
(7) 7	(7) 0.5	(7) WH	(7) 4976	(7) AUTOSAR CAN Bus [-] 3 Serial Data	(7) II	(7) —
(8) 8	(8) 0.5	(8) BU / BK	(8) 4977	(8) AUTOSAR CAN Bus [+] 3 Serial Data	(8) II	(8) —

K124 Image Processing Module X8 (UKL)

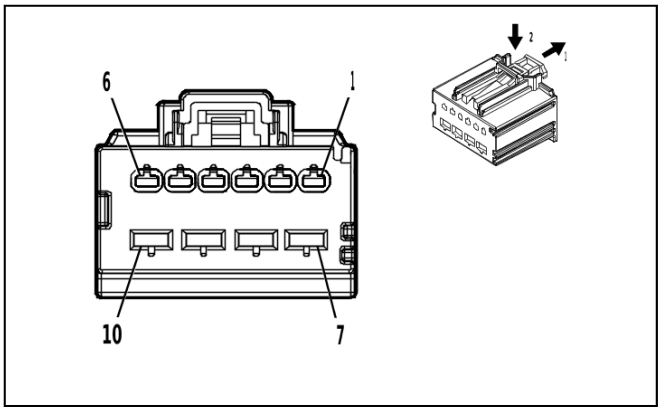

5035058

Connector Part Information

- Harness Type: Body Wiring Harness
- OEM Connector: 31372-1600
- Service Connector: 13525907
- Description: 10-Way F 1.5, 2.8 MX Series(BK)

Terminal Part Information

Terminal Type ID	Terminated Lead	Diagnostic Test Probe	Terminal Removal Tool
I	19300432	J-35616-2A (GY)	J-38125-557
II	85544080	J-35616-4A (PU)	J-38125-11A

K124 Image Processing Module X8 (UKL)

Pin	Size	Color	Circuit	Function	Terminal Type ID	Option
(1) 1	(1) 0.35	(1) BU / BN	(1) 7744	(1) Driver Illumination Lamp Ground	(1) I	(1) —
(2) 2	(2) 0.35	(2) WH / VT	(2) 2246	(2) Driver Illumination Lamp 1 Control	(2) I	(2) —
(3) 3	(3) 0.35	(3) YE / BU	(3) 2245	(3) Driver Illumination Lamp 2 Control	(3) I	(3) —
4 - 6	—	—	—	Not Occupied	—	—
(7) 7	(7) 1	(7) RD / BN	(7) 13240	(7) Battery Positive Voltage	(7) II	(7) —
(8) 8	(8) 1	(8) BK	(8) 1450	(8) Ground	(8) II	(8) —
9 - 10	—	—	—	Not Occupied	—	—

K160 Brake System Control Module

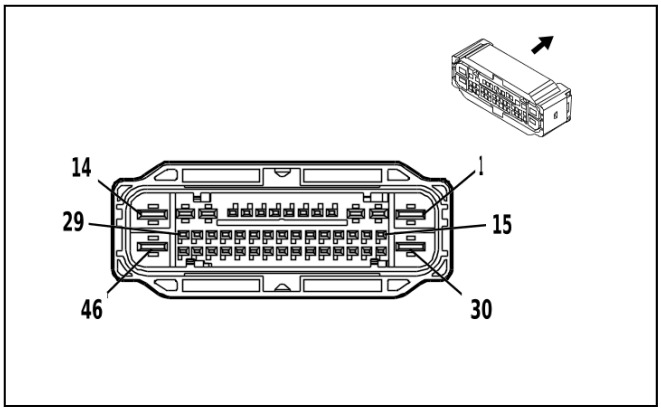

4162046

Connector Part Information

- Harness Type: Body Wiring Harness
- OEM Connector: 35492372
- Service Connector: 85090369
- Description: 46-Way F 1.2 OCS, 2.8, 6.3 CTS Series, Sealed(GY)

Terminal Part Information

Terminal Type ID	Terminated Lead	Diagnostic Test Probe	Terminal Removal Tool
I	13575368	J-35616-35 (VT)	J-38125-36
II	19370818	J-35616-12 (BU)	J-38125-215A
III	84634921	J-35616-42 (RD)	J-38125-212

K160 Brake System Control Module

Pin	Size	Color	Circuit	Function	Terminal Type ID	Option
(1) 1	(1) 6	(1) BK	(1) 150	(1) Ground	(1) III	(1) —
(2) 2	(2) 2.5	(2) WH	(2) 2001	(2) Left Park Brake Motor Apply Control	(2) I	(2) —
(3) 3	(3) 2.5	(3) GY / BK	(3) 4369	(3) Left Park Brake Motor Low Reference	(3) I	(3) —
(4) 4	(4) 0.5	(4) GY / WH	(4) 7064	(4) Left Front Wheel Speed Sensor Control	(4) II	(4) —
(5) 5	(5) 0.5	(5) GY	(5) 830	(5) Left Front Wheel Speed Sensor Signal	(5) II	(5) —
6 - 8	—	—	—	Not Occupied	—	—
(9) 9	(9) 0.5	(9) VT / WH	(9) 639	(9) Run/Crank Ignition 1 Voltage	(9) II	(9) —
(10) 10	(10) 0.5	(10) GY / BN	(10) 7065	(10) Right Front Wheel Speed Sensor Control	(10) II	(10) —
(11) 11	(11) 0.5	(11) YE	(11) 872	(11) Right Front Wheel Speed Sensor Signal	(11) II	(11) —
(12) 12	(12) 2.5	(12) GN / VT	(12) 1988	(12) Right Park Brake Motor Apply Control	(12) I	(12) —
(13) 13	(13) 2.5	(13) GY	(13) 4368	(13) Right Park Brake Motor Low Reference	(13) I	(13) —
(14) 14	(14) 6	(14) RD / YE	(14) 442	(14) Battery Positive Voltage	(14) III	(14) —
(15) 15	(15) 0.5	(15) GY / BK	(15) 7127	(15) Left Rear Wheel Speed Sensor Control	(15) II	(15) —
(16) 16	(16) 0.5	(16) BU	(16) 884	(16) Left Rear Wheel Speed Sensor Signal	(16) II	(16) —

Pin	Size	Color	Circuit	Function	Terminal Type ID	Option
(17) 17	(17) 0.35	(17) BU / YE	(17) 4979	(17) AUTOSAR CAN Bus [+] 2 Serial Data	(17) II	(17) —
(18) 18	(18) 0.35	(18) BU / YE	(18) 4979	(18) AUTOSAR CAN Bus [+] 2 Serial Data	(18) II	(18) —
(19) 19	(19) 0.5	(19) GN / GY	(19) 817	(19) Vehicle Speed Signal	(19) II	(19) —
20 - 22	—	—	—	Not Occupied	—	—
(23) 23	(23) 0.5	(23) GN / YE	(23) 2731	(23) Brake System Control Module LIN Bus 1	(23) II	(23) —
24	—	—	—	Not Occupied	—	—
(25) 25	(25) 0.5	(25) WH	(25) 4976	(25) AUTOSAR CAN Bus [-] 3 Serial Data	(25) II	(25) —
(26) 26	(26) 0.5	(26) WH	(26) 4976	(26) AUTOSAR CAN Bus [-] 3 Serial Data	(26) II	(26) —
27	—	—	—	Not Occupied	—	—
(28) 28	(28) 0.5	(28) GY / YE	(28) 7128	(28) Right Rear Wheel Speed Sensor Control	(28) II	(28) —
(29) 29	(29) 0.5	(29) VT	(29) 882	(29) Right Rear Wheel Speed Sensor Signal	(29) II	(29) —
(30) 30	(30) 6	(30) BK	(30) 150	(30) Ground	(30) III	(30) —
31 - 32	—	—	—	Not Occupied	—	—
(33) 33	(33) 0.35	(33) WH	(33) 4978	(33) AUTOSAR CAN Bus [-] 2 Serial Data	(33) II	(33) —
(34) 34	(34) 0.35	(34) WH	(34) 4978	(34) AUTOSAR CAN Bus [-] 2 Serial Data	(34) II	(34) —
(35) 35	(35) 0.75	(35) GN / BU	(35) 2733	(35) Brake System Control Module LIN Bus 2	(35) II	(35) —
(36) 36	(36) 0.75	(36) WH / BK	(36) 2223	(36) Trailer Brake Apply Signal	(36) II	(36) —
(37) 37	(37) 0.75	(37) YE / BK	(37) 2224	(37) Trailer Brake Enable Signal	(37) II	(37) —
(38) 38	(38) 0.5	(38) GN / GY	(38) 333	(38) Brake Fluid Level Signal	(38) II	(38) —
(39) 39	(39) 0.75	(39) BN / BU	(39) 1602	(39) Front Brake Pad Wear Sensor Signal	(39) II	(39) —
40	—	—	—	Not Occupied	—	—
(41) 41	(41) 0.5	(41) BU / BK	(41) 4977	(41) AUTOSAR CAN Bus [+] 3 Serial Data	(41) II	(41) —
(42) 42	(42) 0.5	(42) BU / BK	(42) 4977	(42) AUTOSAR CAN Bus [+] 3 Serial Data	(42) II	(42) —
43	—	—	—	Not Occupied	—	—
(44) 44	(44) 0.75	(44) GN / YE	(44) 1616	(44) Rear Brake Pad Wear Sensor Signal	(44) II	(44) —
45	—	—	—	Not Occupied	—	—
(46) 46	(46) 6	(46) RD / WH	(46) 1642	(46) Battery Positive Voltage	(46) III	(46) —

K164 Differential Control Module X1 (G96)

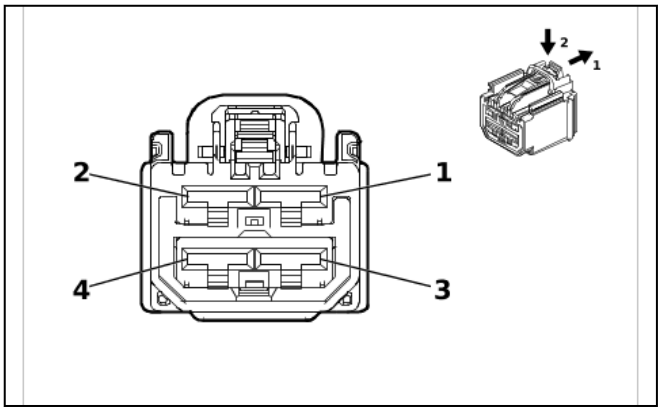

5492913

Connector Part Information

- Harness Type: Body Wiring Harness
- OEM Connector: 7289-7459-40
- Service Connector: 84766433
- Description: 4-Way F 6.3 YESC Series(GY)

Terminal Part Information

Terminal Type ID	Terminated Lead	Diagnostic Test Probe	Terminal Removal Tool
I	Not required	J-35616-42 (RD)	No Tool Required

K164 Differential Control Module X1 (G96)

Pin	Size	Color	Circuit	Function	Terminal Type ID	Option
(1) 1	(1) 4	(1) GY / BN	(1) 7968	(1) Axle Differential Lock Control High	(1) I	(1) —
(2) 2	(2) 3	(2) BK	(2) 2050	(2) Ground	(2) I	(2) —
(3) 3	(3) 3	(3) RD / GY	(3) 5540	(3) Battery Positive Voltage	(3) I	(3) —
(4) 4	(4) 4	(4) YE / WH	(4) 7969	(4) Axle Differential Lock Control Low	(4) I	(4) —

K164 Differential Control Module X2 (G96)

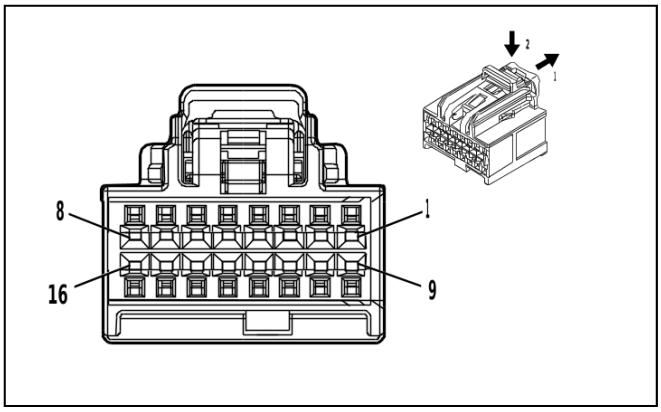

4873243

Connector Part Information

- Harness Type: Body Wiring Harness
- OEM Connector: 35016343
- Service Connector: 13519738
- Description: 16-Way F 0.64 OCS Series(BK)

Terminal Part Information

Terminal Type ID	Terminated Lead	Diagnostic Test Probe	Terminal Removal Tool
I	19354230	J-35616-64B (L-BU)	J-38125-215A

K164 Differential Control Module X2 (G96)

Pin	Size	Color	Circuit	Function	Terminal Type ID	Option
(1) 1	(1) 0.35	(1) WH	(1) 4978	(1) AUTOSAR CAN Bus [-] 2 Serial Data	(1) I	(1) —
(2) 2	(2) 0.35	(2) WH	(2) 4978	(2) AUTOSAR CAN Bus [-] 2 Serial Data	(2) I	(2) —
(3) 3	(3) 0.5	(3) WH	(3) 4978	(3) AUTOSAR CAN Bus [-] 2 Serial Data	(3) I	(3) —
(4) 4	(4) 0.5	(4) BU / WH	(4) 7978	(4) Axle Differential Lock Motor Temperature Sensor Signal	(4) I	(4) —
(5) 5	(5) 0.5	(5) GY	(5) 7976	(5) Axle Differential Lock Motor Position Sensor Signal 2	(5) I	(5) —
(6) 6	(6) 0.5	(6) GN / BN	(6) 7975	(6) Axle Differential Lock Motor Position Sensor Signal 1	(6) I	(6) —
(7) 7	(7) 0.75	(7) VT / BK	(7) 7972	(7) Axle Differential Lock Motor Brake Control Low	(7) I	(7) —
(8) 8	(8) 0.5	(8) BK	(8) 7970	(8) Axle Differential Lock Control Shield	(8) I	(8) —
(9) 9	(9) 0.35	(9) BU / YE	(9) 4979	(9) AUTOSAR CAN Bus [+] 2 Serial Data	(9) I	(9) —
(10) 10	(10) 0.35	(10) BU / YE	(10) 4979	(10) AUTOSAR CAN Bus [+] 2 Serial Data	(10) I	(10) —
(11) 11	(11) 0.5	(11) BU / YE	(11) 4979	(11) AUTOSAR CAN Bus [+] 2 Serial Data	(11) I	(11) —
(12) 12	(12) 0.5	(12) BK / YE	(12) 7977	(12) Axle Differential Lock Motor Temperature Sensor Low Reference	(12) I	(12) —
(13) 13	(13) 0.5	(13) BK / VT	(13) 7974	(13) Axle Differential Lock Motor Position Sensor Low Reference	(13) I	(13) —
(14) 14	(14) 0.75	(14) WH / RD	(14) 7973	(14) Axle Differential Lock Motor Position Sensor High Reference	(14) I	(14) —

Pin	Size	Color	Circuit	Function	Terminal Type ID	Option
15	—	—	—	Not Occupied	—	—
(16) 16	(16) 0.75	(16) WH	(16) 7971	(16) Axle Differential Lock Motor Brake Control High	(16) I	(16) —

K169 Folding 3rd Row Seat Module X1 (AS8)

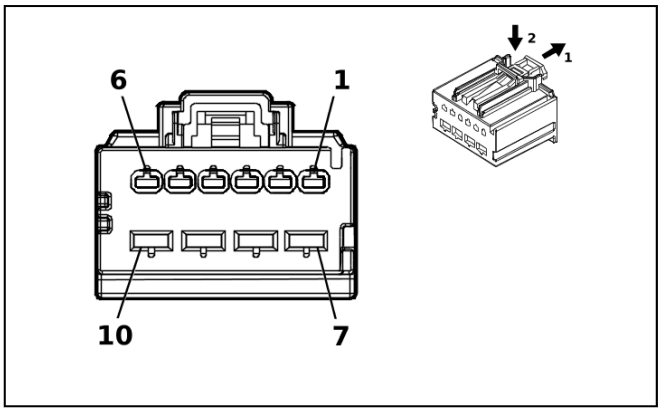

5190551

Connector Part Information

- Harness Type: 3rd Row Seat Wiring Harness
- OEM Connector: 31372-1700
- Service Connector: Service by Harness - See Part Catalog
- Description: 10-Way F 1.5, 2.8 MX Series(GY)

Terminal Part Information

Terminal Type ID	Terminated Lead	Diagnostic Test Probe	Terminal Removal Tool
I	Not required	No Tool Required	No Tool Required

K169 Folding 3rd Row Seat Module X1 (AS8)

Pin	Size	Color	Circuit	Function	Terminal Type ID	Option
(1) 1	(1) —	(1) GN / BN	(1) 8921	(1) Right 3rd Row Folding Seat Back Unlatch Motor Control High	(1) I	(1) —
(2) 2	(2) —	(2) BU / VT	(2) 8920	(2) Right 3rd Row Folding Seat Back Unlatch Motor Control Low	(2) I	(2) —
(3) 3	(3) —	(3) YE / BN	(3) 4214	(3) 3rd Row Left Seat Recline Position Sensor Signal	(3) I	(3) —
(4) 4	(4) —	(4) BK / BU	(4) 5474	(4) 3rd Row Seat Sensor Low Reference	(4) I	(4) —
(5) 5	(5) —	(5) WH / VT	(5) 4213	(5) 3rd Row Right Seat Recline Position Sensor Signal	(5) I	(5) —
(6) 6	(6) —	(6) GN / BU	(6) 2856	(6) Body Control Module LIN Bus 10	(6) I	(6) —
(7) 7	(7) —	(7) BU	(7) 4217	(7) 3rd Row Right Seat Recline Motor Forward Control	(7) I	(7) —
(8) 8	(8) —	(8) GY / OG	(8) 4218	(8) 3rd Row Right Seat Recline Rearward Control	(8) I	(8) —

Pin	Size	Color	Circuit	Function	Terminal Type ID	Option
9	—	—	—	Not Occupied	—	—
(10) 10	(10) — (10) —	(10) BK (10) BK / WH	(10) 1450 (10) 1450	(10) Ground (10) Ground	(10) I (10) I	(10) — (10) —

K169 Folding 3rd Row Seat Module X2 (AS8)

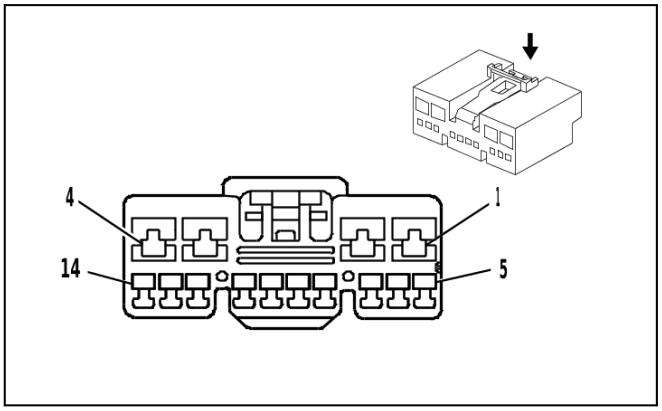

1469285

Connector Part Information

- Harness Type: 3rd Row Seat Wiring Harness
- OEM Connector: 19179972
- Service Connector: Service by Harness - See Part Catalog
- Description: 14-Way F 0.64, 2.8 YESC Series(L-GY)

Terminal Part Information

Terminal Type ID	Terminated Lead	Diagnostic Test Probe	Terminal Removal Tool
I	Not required	No Tool Required	No Tool Required

K169 Folding 3rd Row Seat Module X2 (AS8)

Pin	Size	Color	Circuit	Function	Terminal Type ID	Option
(1) 1	(1) —	(1) RD / GY	(1) 7840	(1) Battery Positive Voltage	(1) I	(1) —
2	—	—	—	Not Occupied	—	—
(3) 3	(3) —	(3) VT / BK	(3) 4221	(3) 3rd Row Left Seat Recline Motor Forward Control	(3) I	(3) —
(4) 4	(4) —	(4) BN	(4) 4222	(4) 3rd Row Left Seat Recline Motor Rearward Control	(4) I	(4) —
5	—	—	—	Not Occupied	—	—
(6) 6	(6) —	(6) YE / BU	(6) 2698	(6) Left 3rd Row Seat Recline Switch Signal	(6) I	(6) —
(7) 7	(7) —	(7) GN / GY	(7) 2699	(7) Right 3rd Row Seat Recline Switch Signal	(7) I	(7) —
8 - 10	—	—	—	Not Occupied	—	—
(11) 11	(11) —	(11) GY / WH	(11) 8922	(11) Left 3rd Row Folding Seat Back Unlatch Motor Control Low	(11) I	(11) —

Pin	Size	Color	Circuit	Function	Terminal Type ID	Option
(12) 12	(12) —	(12) YE / BK	(12) 8923	(12) Left 3rd Row Folding Seat Back Unlatch Motor Control High	(12) I	(12) —
13 - 14	—	—	—	Not Occupied	—	—

K175 Front Floor Console Compartment Cooler (DCK)

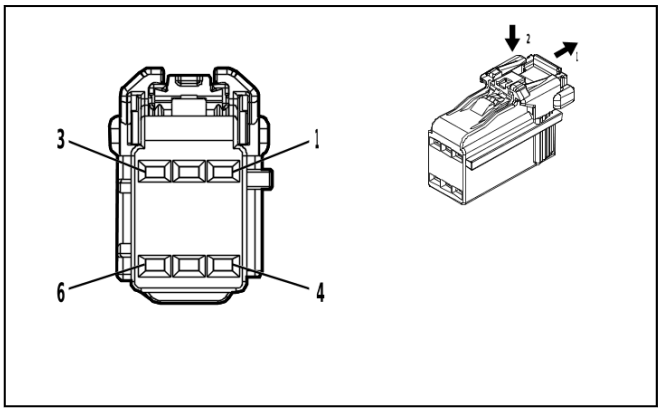

4862126

Connector Part Information

- Harness Type: Front Floor Console Wiring Harness
- OEM Connector: 6098-8996
- Service Connector: Service by Harness - See Part Catalog
- Description: 6-Way F 1.2 Series(BK)

Terminal Part Information

Terminal Type ID	Terminated Lead	Diagnostic Test Probe	Terminal Removal Tool
I	Not required	J-35616-12 (BU)	No Tool Required
II	Not required	J-35616-16 (L-GN)	No Tool Required

K175 Front Floor Console Compartment Cooler (DCK)

Pin	Size	Color	Circuit	Function	Terminal Type ID	Option
(1) 1	(1) 0.75	(1) RD / VT	(1) 8640	(1) Battery Positive Voltage	(1) II	(1) —
(2) 2	(2) 0.75	(2) BK	(2) 1250	(2) Ground	(2) II	(2) —
(3) 3	(3) 0.35	(3) GN / VT	(3) 2857	(3) Body Control Module LIN Bus 11	(3) I	(3) —
(4) 4	(4) 0.35	(4) GN / WH	(4) 7846	(4) Refrigerator On Indicator Control	(4) I	(4) —
(5) 5	(5) 0.35	(5) BU / GN	(5) 7845	(5) Refrigerator Freeze Indicator Control	(5) I	(5) —
(6) 6	(6) 0.35	(6) BN / BK	(6) 7844	(6) Refrigerator Enable Signal	(6) I	(6) —

K180S Driver Monitoring System Module - Steering Wheel X3 (UKL)

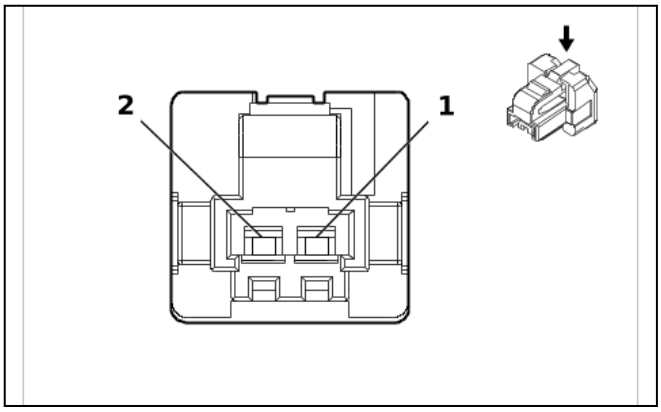

6280465

Connector Part Information
- Harness Type: Steering Wheel Horn Switch Wiring Harness
- OEM Connector: 502380-0200
- Service Connector: Service by Harness - See Part Catalog
- Description: 2-Way F Click-Mate Series(NA)

Terminal Part Information

Terminal Type ID	Terminated Lead	Diagnostic Test Probe	Terminal Removal Tool
I	Not required	EL-35616-58 (BK)	No Tool Required

K180S Driver Monitoring System Module - Steering Wheel X3 (UKL)

Pin	Size	Color	Circuit	Function	Terminal Type ID	Option
(1) 1	(1) 0.13	(1) YE / GY	(1) 5883	(1) Steering Wheel Heating Switch Signal	(1) I	(1) —
(2) 2	(2) 0.13	(2) BN / WH	(2) 5884	(2) Steering Wheel Heating Switch LED Control	(2) I	(2) —

K180S Driver Monitoring System Module - Steering Wheel X4 (UKL)

—

Connector Part Information
- Harness Type: Steering Wheel Horn Switch Wiring Harness
- OEM Connector: Not Available
- Service Connector: Service by Harness - See Part Catalog
- Description: 2-Way

Terminal Part Information

Terminal Type ID	Terminated Lead	Diagnostic Test Probe	Terminal Removal Tool
I	Not required	No Tool Required	No Tool Required

K180S Driver Monitoring System Module - Steering Wheel X4 (UKL)

Pin	Size	Color	Circuit	Function	Terminal Type ID	Option
(1) 1	(1) —	(1) BK / BU	(1) 5886	(1) Steering Wheel Heating Temperature Sensor Signal	(1) I	(1) —
(2) 2	(2) —	(2) YE / RD	(2) 5885	(2) Steering Wheel Heating Voltage Reference	(2) I	(2) —

K180S Driver Monitoring System Module - Steering Wheel X5 (UKL)

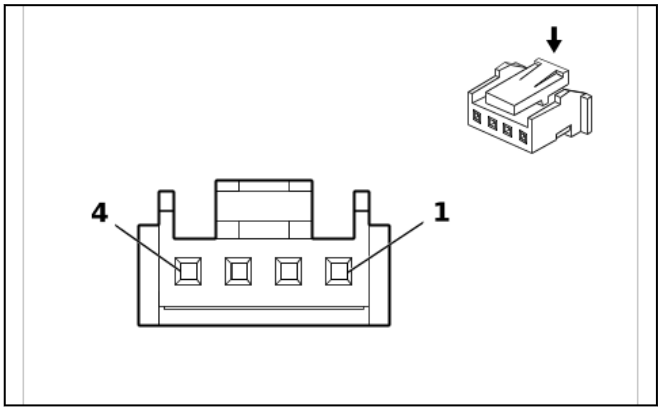

6276016

Connector Part Information

- Harness Type: Steering Wheel LED Display
- OEM Connector: PAP-04V-S
- Service Connector: Service by Harness - See Part Catalog
- Description: 4-Way F 050 Series(NA)

Terminal Part Information

Terminal Type ID	Terminated Lead	Diagnostic Test Probe	Terminal Removal Tool
I	Not required	No Tool Required	No Tool Required

K180S Driver Monitoring System Module - Steering Wheel X5 (UKL)

Pin	Size	Color	Circuit	Function	Terminal Type ID	Option
(1) 1	(1) —	(1) WH / VT	(1) 7745	(1) Steering Wheel Lightbar Control	(1) I	(1) —
(2) 2	(2) —	(2) BU / GN	(2) 7748	(2) Steering Wheel Lightbar Blue Control	(2) I	(2) —
(3) 3	(3) —	(3) VT / YE	(3) 7747	(3) Steering Wheel Lightbar Green Control	(3) I	(3) —
(4) 4	(4) —	(4) GY / BU	(4) 7746	(4) Steering Wheel Lightbar Red Control	(4) I	(4) —

K180S Driver Monitoring System Module - Steering Wheel X6 (UKL)

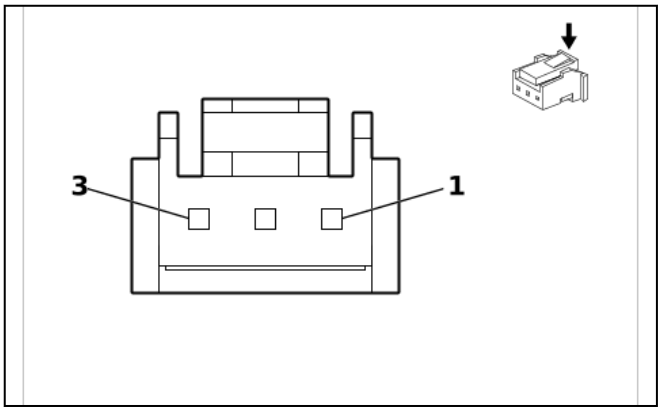

5867324

Connector Part Information

- Harness Type: Steering Wheel Horn Switch Wiring Harness
- OEM Connector: PAP-03V-S
- Service Connector: Service by Harness - See Part Catalog
- Description: 3-Way F 050 Series(WH)

Terminal Part Information

Terminal Type ID	Terminated Lead	Diagnostic Test Probe	Terminal Removal Tool
I	Not required	EL-35616-58 (BK)	No Tool Required

K180S Driver Monitoring System Module - Steering Wheel X6 (UKL)

Pin	Size	Color	Circuit	Function	Terminal Type ID	Option
(1) 1	(1) 0.35	(1) RD / GN	(1) 5140	(1) Battery Positive Voltage	(1) I	(1) —
(2) 2	(2) 0.35	(2) GN / BK	(2) 11023	(2) Image Processing Module LIN Bus 1	(2) I	(2) —
(3) 3	(3) 0.35	(3) BK / WH	(3) 6051	(3) Steering Wheel Ground	(3) I	(3) —

K180S Driver Monitoring System Module - Steering Wheel X7 (UKL)

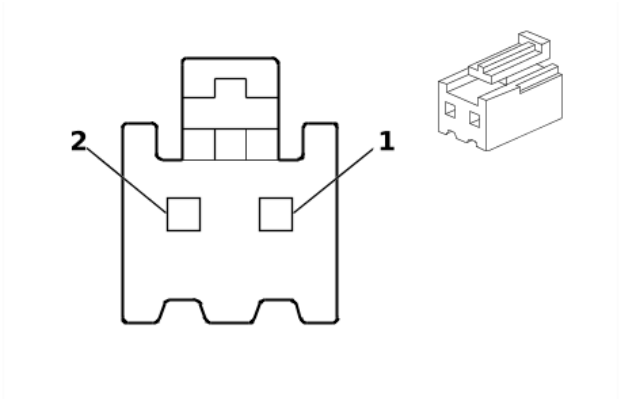

2212059

Connector Part Information
- Harness Type: Steering Wheel Horn Switch Wiring Harness
- OEM Connector: VHR-2N-R
- Service Connector: Service by Harness - See Part Catalog
- Description: 2-Way F VH Series(RD)

Terminal Part Information

Terminal Type ID	Terminated Lead	Diagnostic Test Probe	Terminal Removal Tool
I	Not required	J-35616-18 (BK)	No Tool Required

K180S Driver Monitoring System Module - Steering Wheel X7 (UKL)

Pin	Size	Color	Circuit	Function	Terminal Type ID	Option
(1) 1	(1) 0.5	(1) RD / BU	(1) 10040	(1) Battery Positive Voltage	(1) I	(1) —
(2) 2	(2) 0.5	(2) BK	(2) 6050	(2) Steering Wheel Ground	(2) I	(2) —

K180S Driver Monitoring System Module - Steering Wheel X8 (UKL)

—

Connector Part Information
- Harness Type: Steering Wheel Horn Switch Wiring Harness
- OEM Connector: Not Available
- Service Connector: Service by Harness - See Part Catalog
- Description: 2-Way

Terminal Part Information

Terminal Type ID	Terminated Lead	Diagnostic Test Probe	Terminal Removal Tool
I	Not required	No Tool Required	No Tool Required

K180S Driver Monitoring System Module - Steering Wheel X8 (UKL)

Pin	Size	Color	Circuit	Function	Terminal Type ID	Option
(1) 1	(1) —	(1) GY / YE	(1) 5887	(1) Steering Wheel Heating Low Control	(1) I	(1) —
(2) 2	(2) —	(2) WH / YE	(2) 5888	(2) Steering Wheel Heating High Control	(2) I	(2) —

K182 Parking Assist Control Module X1

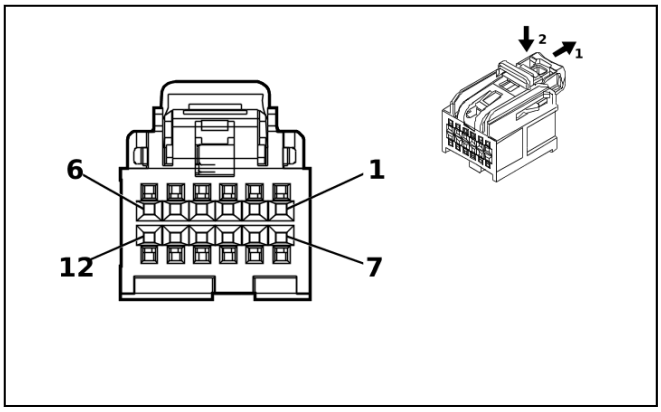

4975223

Connector Part Information

- Harness Type: Body Wiring Harness
- OEM Connector: 35016616
- Service Connector: 13519750
- Description: 12-Way F 0.64 OCS Series(BK)

Terminal Part Information

Terminal Type ID	Terminated Lead	Diagnostic Test Probe	Terminal Removal Tool
I	19354230	J-35616-64B (L-BU)	J-38125-215A

K182 Parking Assist Control Module X1

Pin	Size	Color	Circuit	Function	Terminal Type ID	Option
(1) 1	(1) 0.5	(1) RD / WH	(1) 4740	(1) Battery Positive Voltage	(1) I	(1) —
(2) 2	(2) 0.5	(2) WH	(2) 4986	(2) AUTOSAR CAN Bus [-] 1 Serial Data	(2) I	(2) —
(3) 3	(3) 0.5	(3) BU	(3) 4987	(3) AUTOSAR CAN Bus [+] 1 Serial Data	(3) I	(3) —
(4) 4	(4) 0.5	(4) BU	(4) 4987	(4) AUTOSAR CAN Bus [+] 1 Serial Data	(4) I	(4) —
5	—	—	—	Not Occupied	—	—
(6) 6	(6) 0.5	(6) BK	(6) 1450	(6) Ground	(6) I	(6) —
7	—	—	—	Not Occupied	—	—
(8) 8	(8) 0.5	(8) WH	(8) 4986	(8) AUTOSAR CAN Bus [-] 1 Serial Data	(8) I	(8) —
(9) 9	(9) 0.5	(9) BU	(9) 4987	(9) AUTOSAR CAN Bus [+] 1 Serial Data	(9) I	(9) —
(10) 10	(10) 0.5	(10) WH	(10) 4986	(10) AUTOSAR CAN Bus [-] 1 Serial Data	(10) I	(10) —
11 - 12	—	—	—	Not Occupied	—	—

K182 Parking Assist Control Module X2

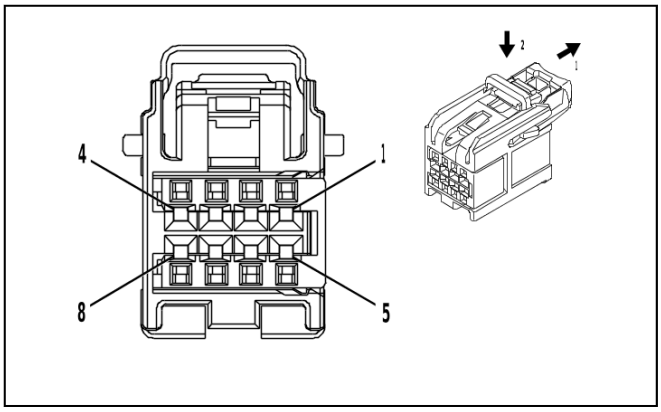

4232228

Connector Part Information

- Harness Type: Body Wiring Harness
- OEM Connector: 15526973
- Service Connector: 19353873
- Description: 8-Way F 0.64 OCS Series(GY)

Terminal Part Information

Terminal Type ID	Terminated Lead	Diagnostic Test Probe	Terminal Removal Tool
I	Not required	J-35616-64B (L-BU)	No Tool Required

K182 Parking Assist Control Module X2

Pin	Size	Color	Circuit	Function	Terminal Type ID	Option
(1) 1	(1) 0.5	(1) BU	(1) 3157	(1) Right Rear Advanced Parking Assist Side Object Sensor Signal	(1) I	(1) —
(2) 2	(2) 0.5	(2) YE / WH	(2) 2377	(2) Right Rear Middle Parking Assist Sensor Signal	(2) I	(2) —
(3) 3	(3) 0.5	(3) YE	(3) 2375	(3) Left Rear Outer Parking Assist Sensor Signal	(3) I	(3) —
(4) 4	(4) 0.5	(4) BN / WH	(4) 2374	(4) Object Sensor Voltage Reference	(4) I	(4) —
(5) 5	(5) 0.5	(5) YE / VT	(5) 2378	(5) Right Rear Outer Parking Assist Sensor Signal	(5) I	(5) —
(6) 6	(6) 0.5	(6) YE / BU	(6) 2376	(6) Left Rear Middle Parking Assist Sensor Signal	(6) I	(6) —
(7) 7	(7) 0.5	(7) GN	(7) 3156	(7) Left Rear Advanced Parking Assist Side Object Sensor Signal	(7) I	(7) —
(8) 8	(8) 0.5	(8) BK / GY	(8) 2379	(8) Object Sensor Low Reference	(8) I	(8) —

K182 Parking Assist Control Module X3

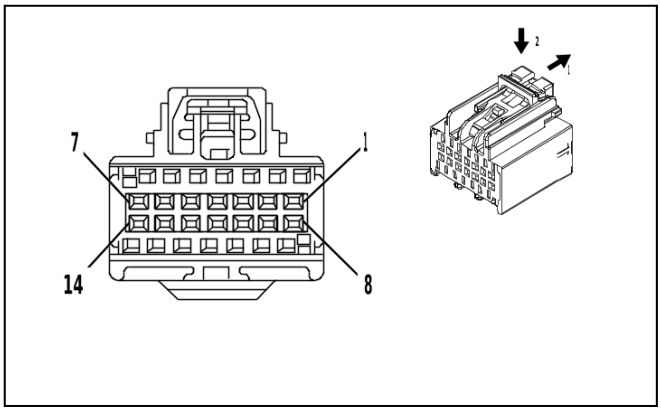

4547098

Connector Part Information

- Harness Type: Body Wiring Harness
- OEM Connector: 7289-2897-90
- Service Connector: 19354933
- Description: 14-Way F 0.64 Kaizen Series(BU)

Terminal Part Information

Terminal Type ID	Terminated Lead	Diagnostic Test Probe	Terminal Removal Tool
I	19303553	J-35616-64B (L-BU)	J-38125-215A

K182 Parking Assist Control Module X3

Pin	Size	Color	Circuit	Function	Terminal Type ID	Option
(1) 1	(1) 0.35	(1) WH / GY	(1) 4104	(1) AUTOSAR CAN Bus [-] 8 Serial Data	(1) I	(1) —
(2) 2	(2) 0.35	(2) BU / GY	(2) 4105	(2) AUTOSAR CAN Bus [+] 8 Serial Data	(2) I	(2) —
3	—	—	—	Not Occupied	—	—
(4) 4	(4) 0.5	(4) GY	(4) 3154	(4) Left Front Advanced Parking Assist Side Object Sensor Signal	(4) I	(4) —
(5) 5	(5) 0.5	(5) YE / GY	(5) 5216	(5) Left Front Middle Parking Assist Sensor	(5) I	(5) —
(6) 6	(6) 0.5	(6) WH / GY	(6) 5217	(6) Right Front Outer Parking Assist Sensor	(6) I	(6) —
(7) 7	(7) 0.5	(7) BN	(7) 6581	(7) Front Parking Assist Display Control	(7) I	(7) —
(8) 8	(8) 0.35	(8) WH / GY	(8) 4104	(8) AUTOSAR CAN Bus [-] 8 Serial Data	(8) I	(8) —
(9) 9	(9) 0.35	(9) BU / GY	(9) 4105	(9) AUTOSAR CAN Bus [+] 8 Serial Data	(9) I	(9) —
10	—	—	—	Not Occupied	—	—
(11) 11	(11) 0.5	(11) VT / WH	(11) 5215	(11) Left Front Outer Parking Assist Sensor	(11) I	(11) —
(12) 12	(12) 0.5	(12) VT / GY	(12) 5218	(12) Right Front Middle Parking Assist Sensor	(12) I	(12) —

Pin	Size	Color	Circuit	Function	Terminal Type ID	Option
(13) 13	(13) 0.5	(13) GN	(13) 3155	(13) Right Front Advanced Parking Assist Side Object Sensor Signal	(13) I	(13) —
(14) 14	(14) 0.5	(14) BK / BU	(14) 5214	(14) Front Parking Assist Sensor Low Reference	(14) I	(14) —

K183 UHF Short Range Low Energy Remote Control Access Transceiver ((BOR / BOY) - AZ3)

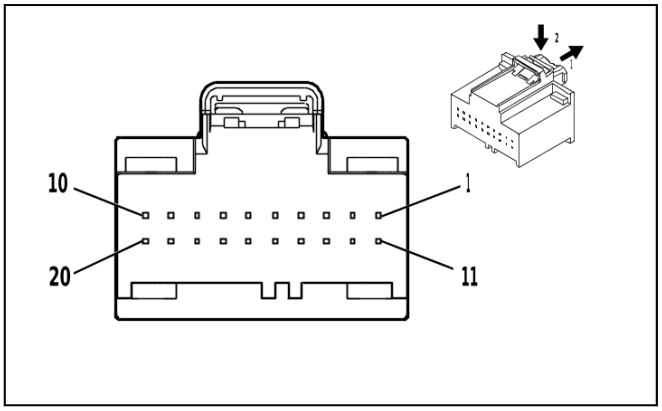

5112891

Connector Part Information

- Harness Type: Front Floor Console Wiring Harness
- OEM Connector: 31410-0205
- Service Connector: Service by Harness - See Part Catalog
- Description: 20-Way F 0.64 Series(BK)

Terminal Part Information

Terminal Type ID	Terminated Lead	Diagnostic Test Probe	Terminal Removal Tool
I	Not required	J-35616-64B (L-BU)	No Tool Required

K183 UHF Short Range Low Energy Remote Control Access Transceiver ((BOR / BOY) - AZ3)

Pin	Size	Color	Circuit	Function	Terminal Type ID	Option
(1) 1	(1) 0.35	(1) GN / BK	(1) 2738	(1) Near Field Communication Module LIN Bus 1	(1) I	(1) —
(2) 2	(2) 0.5	(2) BU / BN	(2) 11326	(2) Virtual Key Private CAN Bus [+] Serial Data	(2) I	(2) —
(3) 3	(3) 0.5	(3) WH / YE	(3) 11325	(3) Virtual Key Private CAN Bus [-] Serial Data	(3) I	(3) —
4 - 5	—	—	—	Not Occupied	—	—
(6) 6	(6) 0.35	(6) BU / WH	(6) 4985	(6) AUTOSAR CAN Bus [+] 5 Serial Data	(6) I	(6) —
(7) 7	(7) 0.35	(7) BU / YE	(7) 4984	(7) AUTOSAR CAN Bus [-] 5 Serial Data	(7) I	(7) —
8 - 11	—	—	—	Not Occupied	—	—
(12) 12	(12) 0.5	(12) BU / BN	(12) 11326	(12) Virtual Key Private CAN Bus [+] Serial Data	(12) I	(12) —
(13) 13	(13) 0.5	(13) WH / YE	(13) 11325	(13) Virtual Key Private CAN Bus [-] Serial Data	(13) I	(13) —

Pin	Size	Color	Circuit	Function	Terminal Type ID	Option
14 - 15	—	—	—	Not Occupied	—	—
(16) 16	(16) 0.35	(16) BU / WH	(16) 4985	(16) AUTOSAR CAN Bus [+] 5 Serial Data	(16) I	(16) —
(17) 17	(17) 0.35	(17) BU / YE	(17) 4984	(17) AUTOSAR CAN Bus [-] 5 Serial Data	(17) I	(17) —
(18) 18	(18) 0.5	(18) BK / WH	(18) 1351	(18) Signal Ground	(18) I	(18) —
19	—	—	—	Not Occupied	—	—
(20) 20	(20) 0.5	(20) RD / VT	(20) 6340	(20) Battery Positive Voltage	(20) I	(20) —

K183 UHF Short Range Low Energy Remote Control Access Transceiver ((BOR / BOY) & AZ3)

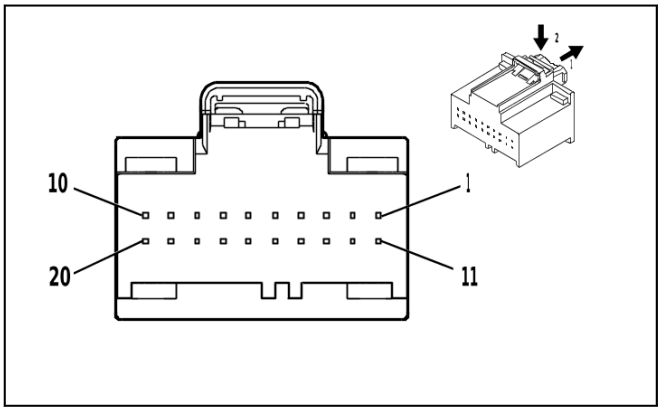

5112891

Connector Part Information

- Harness Type: Front Seat Wiring Harness - Center
- OEM Connector: 31410-0205
- Service Connector: Service by Harness - See Part Catalog
- Description: 20-Way F 0.64 Series(BK)

Terminal Part Information

Terminal Type ID	Terminated Lead	Diagnostic Test Probe	Terminal Removal Tool
I	Not required	J-35616-64B (L-BU)	No Tool Required

K183 UHF Short Range Low Energy Remote Control Access Transceiver ((BOR / BOY) & AZ3)

Pin	Size	Color	Circuit	Function	Terminal Type ID	Option
(1) 1	(1) 0.35	(1) GN / BK	(1) 2738	(1) Near Field Communication Module LIN Bus 1	(1) I	(1) —
(2) 2	(2) 0.5	(2) BU / BN	(2) 11326	(2) Virtual Key Private CAN Bus [+] Serial Data	(2) I	(2) —
(3) 3	(3) 0.5	(3) WH / YE	(3) 11325	(3) Virtual Key Private CAN Bus [-] Serial Data	(3) I	(3) —
4 - 5	—	—	—	Not Occupied	—	—
(6) 6	(6) 0.35	(6) BU / WH	(6) 4985	(6) AUTOSAR CAN Bus [+] 5 Serial Data	(6) I	(6) —

Pin	Size	Color	Circuit	Function	Terminal Type ID	Option
(7) 7	(7) 0.35	(7) BU / YE	(7) 4984	(7) AUTOSAR CAN Bus [-] 5 Serial Data	(7) I	(7) —
8 - 11	—	—	—	Not Occupied	—	—
(12) 12	(12) 0.5	(12) BU / BN	(12) 11326	(12) Virtual Key Private CAN Bus [+] Serial Data	(12) I	(12) —
(13) 13	(13) 0.5	(13) WH / YE	(13) 11325	(13) Virtual Key Private CAN Bus [-] Serial Data	(13) I	(13) —
14 - 15	—	—	—	Not Occupied	—	—
(16) 16	(16) 0.35	(16) BU / WH	(16) 4985	(16) AUTOSAR CAN Bus [+] 5 Serial Data	(16) I	(16) —
(17) 17	(17) 0.35	(17) BU / YE	(17) 4984	(17) AUTOSAR CAN Bus [-] 5 Serial Data	(17) I	(17) —
(18) 18	(18) 0.5	(18) BK / WH	(18) 1351	(18) Signal Ground	(18) I	(18) —
19	—	—	—	Not Occupied	—	—
(20) 20	(20) 0.5	(20) RD / VT	(20) 6340	(20) Battery Positive Voltage	(20) I	(20) —

K194 Rear Gate Module X1 (TB5 / TCP)

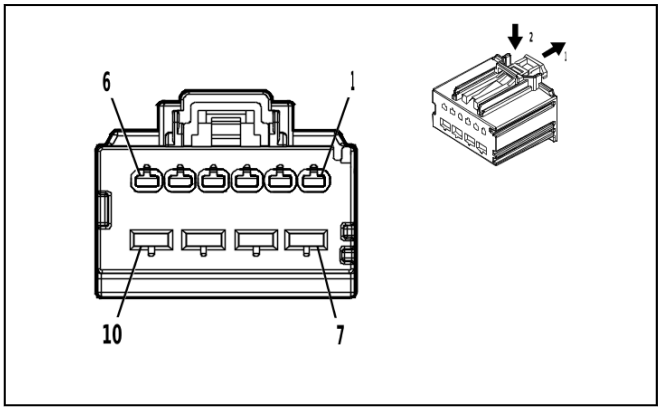

5035058

Connector Part Information

- Harness Type: Body Wiring Harness
- OEM Connector: 31372-1600
- Service Connector: 13525907
- Description: 10-Way F 1.5, 2.8 MX Series(BK)

Terminal Part Information

Terminal Type ID	Terminated Lead	Diagnostic Test Probe	Terminal Removal Tool
I	85544080	J-35616-4A (PU)	J-38125-11A

K194 Rear Gate Module X1 (TB5 / TCP)

Pin	Size	Color	Circuit	Function	Terminal Type ID	Option
1 - 6	—	—	—	Not Occupied	—	—
(7) 7	(7) 2.5	(7) RD / BN	(7) 3842	(7) Battery Positive Voltage	(7) I	(7) —

Pin	Size	Color	Circuit	Function	Terminal Type ID	Option
8 - 9	—	—	—	Not Occupied	—	—
(10) 10	(10) 2.5	(10) BK	(10) 2050	(10) Ground	(10) I	(10) —

K194 Rear Gate Module X2 (TB5 / TCP)

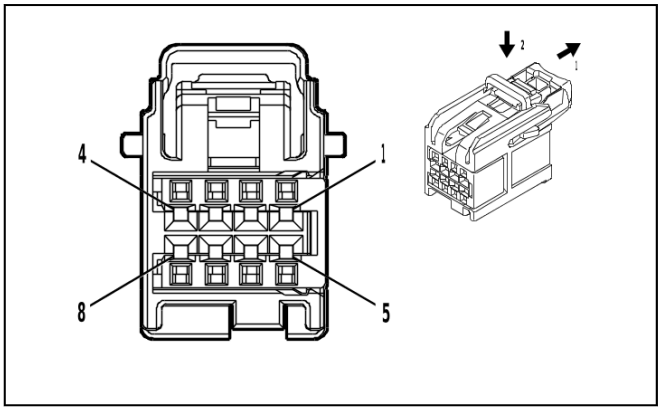

4935776

Connector Part Information

- Harness Type: Body Wiring Harness
- OEM Connector: 15526972
- Service Connector: 19370429
- Description: 8-Way F 0.64 OCS Series(BK)

Terminal Part Information

Terminal Type ID	Terminated Lead	Diagnostic Test Probe	Terminal Removal Tool
I	Not required	J-35616-12 (BU)	No Tool Required

K194 Rear Gate Module X2 (TB5 / TCP)

Pin	Size	Color	Circuit	Function	Terminal Type ID	Option
1	—	—	—	Not Occupied	—	—
(2) 2	(2) 0.35	(2) WH	(2) 4100	(2) AUTOSAR CAN Bus [-] 4 Serial Data	(2) I	(2) —
(3) 3	(3) 0.35	(3) WH	(3) 4100	(3) AUTOSAR CAN Bus [-] 4 Serial Data	(3) I	(3) —
(4) 4	(4) 0.35	(4) BU / VT	(4) 4101	(4) AUTOSAR CAN Bus [+] 4 Serial Data	(4) I	(4) —
5	—	—	—	Not Occupied	—	—
(6) 6	(6) 0.35	(6) BU / VT	(6) 4101	(6) AUTOSAR CAN Bus [+] 4 Serial Data	(6) I	(6) —
(7) 7	(7) 0.35	(7) WH	(7) 4100	(7) AUTOSAR CAN Bus [-] 4 Serial Data	(7) I	(7) —
(8) 8	(8) 0.35	(8) BU / VT	(8) 4101	(8) AUTOSAR CAN Bus [+] 4 Serial Data	(8) I	(8) —

K194 Rear Gate Module X3 (TB5 / TCP)

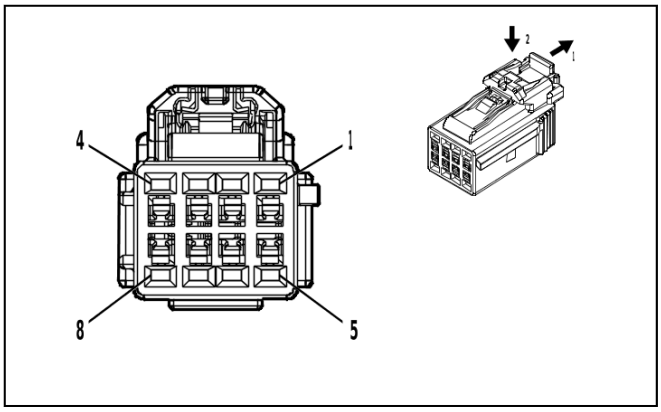

5086387

Connector Part Information

- Harness Type: Liftgate Jumper
- OEM Connector: 13533339
- Service Connector: Service by Harness - See Part Catalog
- Description: 8-Way F 1.2 Series(BK)

Terminal Part Information

Terminal Type ID	Terminated Lead	Diagnostic Test Probe	Terminal Removal Tool
I	Not required	No Tool Required	No Tool Required

K194 Rear Gate Module X3 (TB5 / TCP)

Pin	Size	Color	Circuit	Function	Terminal Type ID	Option
(1) 1	(1) —	(1) WH	(1) 4689	(1) Rear Closure Open/Close Motor Open Control	(1) I	(1) —
2	—	—	—	Not Occupied	—	—
(3) 3	(3) —	(3) BN / YE	(3) 4686	(3) Rear Closure Position Sensor Signal 2	(3) I	(3) —
(4) 4	(4) —	(4) BN / RD	(4) 4683	(4) Rear Closure Position Sensor Voltage Reference	(4) I	(4) —
(5) 5	(5) —	(5) BN / WH	(5) 4690	(5) Rear Closure Open/Close Motor Close Control	(5) I	(5) —
(6) 6	(6) —	(6) BK / GN	(6) 4687	(6) Rear Closure Position Sensor Low Reference	(6) I	(6) —
(7) 7	(7) —	(7) BU / WH	(7) 4685	(7) Rear Closure Position Sensor Signal 1	(7) I	(7) —
8	—	—	—	Not Occupied	—	—

K194 Rear Gate Module X4 (TB5 / TCP)

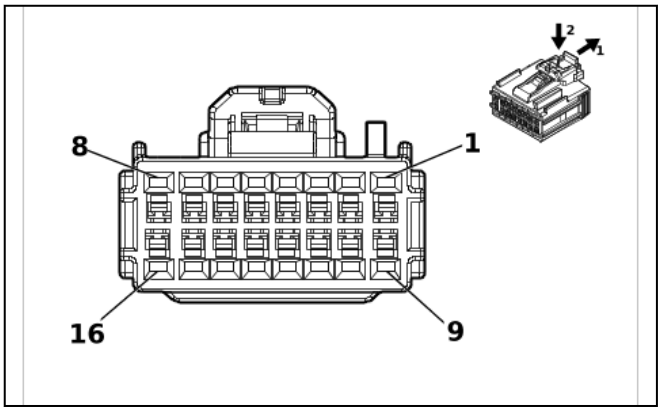

6074391

Connector Part Information

- Harness Type: Body Wiring Harness
- OEM Connector: 6098-9012
- Service Connector: 13541574
- Description: 16-Way F 1.2 MCON Series(BK)

Terminal Part Information

Terminal Type ID	Terminated Lead	Diagnostic Test Probe	Terminal Removal Tool
I	19371240	J-35616-12 (BU)	J-38125-215A
II	84962854	J-35616-12 (BU)	J-38125-215A

K194 Rear Gate Module X4 (TB5 / TCP)

Pin	Size	Color	Circuit	Function	Terminal Type ID	Option
(1) 1	(1) 1	(1) BN	(1) 4681	(1) Rear Closure Cinch Latch Motor Cinch Control	(1) I	(1) —
2 - 3	—	—	—	Not Occupied	—	—
(4) 4	(4) 0.35	(4) GY / VT	(4) 4678	(4) Rear Closure Latch Unlatch Status	(4) II	(4) —
5	—	—	—	Not Occupied	—	—
(6) 6	(6) 0.35	(6) WH / GN	(6) 8084	(6) Rear Closure Latch Neutral Status	(6) II	(6) —
7	—	—	—	Not Occupied	—	—
(8) 8	(8) 0.35	(8) GY / WH	(8) 4658	(8) Rear Closure Switch LED Control	(8) II	(8) —
(9) 9	(9) 1	(9) BU / GY	(9) 4682	(9) Rear Closure Cinch Latch Motor Release Control	(9) I	(9) —
(10) 10	(10) 0.35	(10) BK / VT	(10) 4656	(10) Rear Closure Object Sensor Low Reference	(10) II	(10) —
11 - 12	—	—	—	Not Occupied	—	—
(13) 13	(13) 0.35	(13) YE / BK	(13) 8085	(13) Rear Closure Latch Primary Status	(13) II	(13) —
(14) 14	(14) 0.35	(14) GY / GN	(14) 6190	(14) Liftgate Window/Rear Compartment Lid, Exterior Unlatch Signal	(14) II	(14) —
15	—	—	—	Not Occupied	—	—
(16) 16	(16) 0.35	(16) GN	(16) 4657	(16) Rear Closure Switch Signal	(16) II	(16) —

K214 Trailer Tire Pressure Indicator Module (UET)

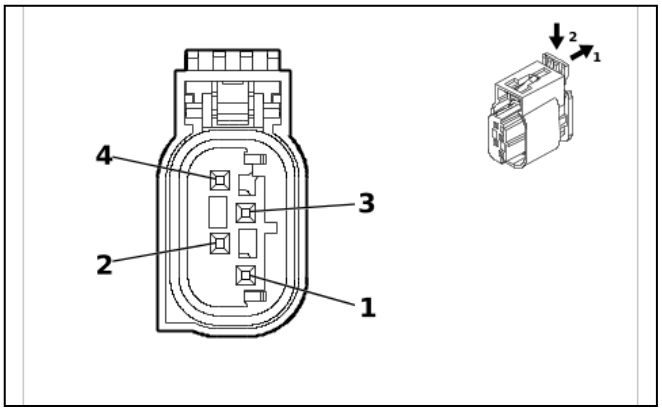

5215490

Connector Part Information

- Harness Type: Rear Object Alarm Sensor Wiring Harness
- OEM Connector: 13655424
- Service Connector: Service by Harness - See Part Catalog
- Description: 4-Way F 0.64 MTS Series, Sealed(BK)

Terminal Part Information

Terminal Type ID	Terminated Lead	Diagnostic Test Probe	Terminal Removal Tool
I	Not required	J-35616-64B (L-BU)	No Tool Required

K214 Trailer Tire Pressure Indicator Module (UET)

Pin	Size	Color	Circuit	Function	Terminal Type ID	Option
(1) 1	(1) 0.5	(1) RD / GY	(1) 4840	(1) Battery Positive Voltage	(1) I	(1) —
(2) 2	(2) 0.5	(2) BK	(2) 1450	(2) Ground	(2) I	(2) —
(3) 3	(3) 0.5	(3) GN / YE	(3) 2862	(3) Body Control Module LIN Bus 16	(3) I	(3) —
4	—	—	—	Not Occupied	—	—

K219 Lighting Control Module X1

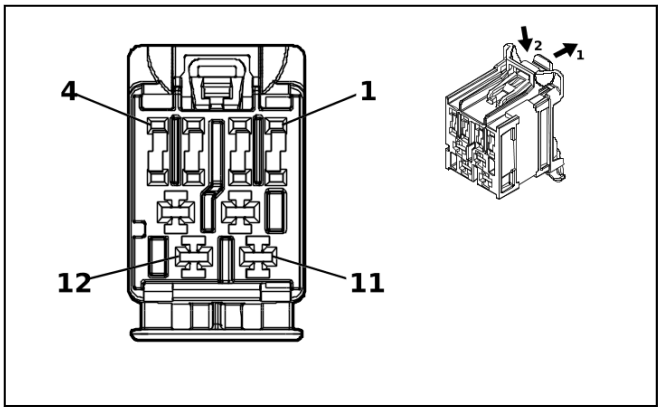

5203784

Connector Part Information

- Harness Type: Body Wiring Harness
- OEM Connector: 160026-0003
- Service Connector: 13509990
- Description: 12-Way F 1.2, 2.8 stAK50h Series(L-PU)

Terminal Part Information

Terminal Type ID	Terminated Lead	Diagnostic Test Probe	Terminal Removal Tool
I	84729890	J-35616-12 (BU)	J-38125-215A
II	87814662	J-35616-35 (VT)	J-38125-557

K219 Lighting Control Module X1

Pin	Size	Color	Circuit	Function	Terminal Type ID	Option
(1) 1	(1) 0.5	(1) YE	(1) 712	(1) Left Headlamp Low Beam Control	(1) I	(1) —
2 - 6	—	—	—	Not Occupied	—	—
(7) 7	(7) 0.5	(7) YE / GN	(7) 2024	(7) Animation Lighting Control	(7) I	(7) —
(8) 8	(8) 0.5	(8) WH / GN	(8) 5966	(8) Approach Lamp Control	(8) I	(8) —
(9) 9	(9) 1	(9) RD / VT	(9) 7140	(9) Battery Positive Voltage	(9) II	(9) —
(10) 10	(10) 0.5	(10) WH / YE	(10) 1254	(10) Left Front Park Lamp Control	(10) II	(10) —
11 - 12	—	—	—	Not Occupied	—	—

K219 Lighting Control Module X2

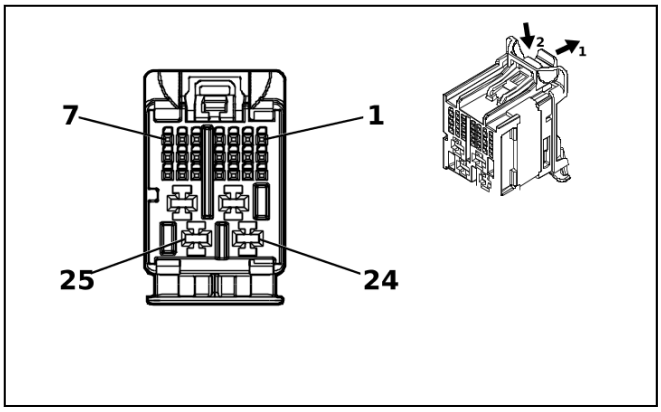

5203807

Connector Part Information

- Harness Type: Body Wiring Harness
- OEM Connector: 160027-0012
- Service Connector: 13534966
- Description: 25-Way F 0.5 MQS, 2.8 MCP Series(GY with GY Inner Connector)

Terminal Part Information

Terminal Type ID	Terminated Lead	Diagnostic Test Probe	Terminal Removal Tool
I	19370262	EL-35616-58 (BK)	EL-38125-58
II	87814662	J-35616-35 (VT)	J-38125-557

K219 Lighting Control Module X2

Pin	Size	Color	Circuit	Function	Terminal Type ID	Option
(1) 1	(1) 0.35	(1) GN / YE	(1) 6846	(1) Rear License Plate Lamp Control	(1) I	(1) —
(2) 2	(2) 0.35	(2) GN / VT	(2) 1315	(2) Right Front Turn Signal Lamp Control	(2) I	(2) —
(3) 3	(3) 0.35	(3) BN / GY	(3) 2268	(3) Windshield Washer Relay Control	(3) I	(3) —
(4) 4	(4) 0.35	(4) WH	(4) 711	(4) Left Headlamp High Beam Control	(4) I	(4) —
5 - 9	—	—	—	Not Occupied	—	—
(10) 10	(10) 0.35	(10) BN / GN	(10) 196	(10) Windshield Wiper Motor Park Switch Signal	(10) I	(10) —
(11) 11	(11) 0.35	(11) VT / BK	(11) 6568	(11) Front Turn Signal Lamp Feedback Signal	(11) I	(11) —
(12) 12	(12) 0.35	(12) GY	(12) 91	(12) Windshield Wiper Motor Relay Coil Control	(12) I	(12) —
13	—	—	—	Not Occupied	—	—
(14) 14	(14) 0.35	(14) VT	(14) 185	(14) Low Washer Fluid Indicator Control	(14) I	(14) —
15	—	—	—	Not Occupied	—	—
(16) 16	(16) 0.35	(16) YE / BU	(16) 318	(16) Left Rear Trailer Stop/Turn Lamp Control	(16) I	(16) —
(17) 17	(17) 0.35	(17) BU / WH	(17) 1314	(17) Left Front Turn Signal Lamp Control	(17) I	(17) —

Pin	Size	Color	Circuit	Function	Terminal Type ID	Option
(18) 18	(18) 0.35	(18) WH	(18) 311	(18) Right Headlamp High Beam Control	(18) I	(18) —
(19) 19	(19) 0.35	(19) WH / BN	(19) 7055	(19) Auxiliary Park Lamp Relay Control	(19) I	(19) —
(20) 20	(20) 0.35	(20) WH / YE	(20) 7545	(20) Right Front Turn Signal Lamp Feedback Signal	(20) I	(20) —
(21) 21	(21) 0.35	(21) WH / VT	(21) 860	(21) Windshield Wiper Switch High Signal	(21) I	(21) —
(22) 22	(22) 1	(22) RD / GN	(22) 7740	(22) Battery Positive Voltage	(22) II	(22) —
(23) 23	(23) 1	(23) RD / BU	(23) 840	(23) Battery Positive Voltage	(23) II	(23) —
24 - 25	—	—	—	Not Occupied	—	—

K219 Lighting Control Module X3

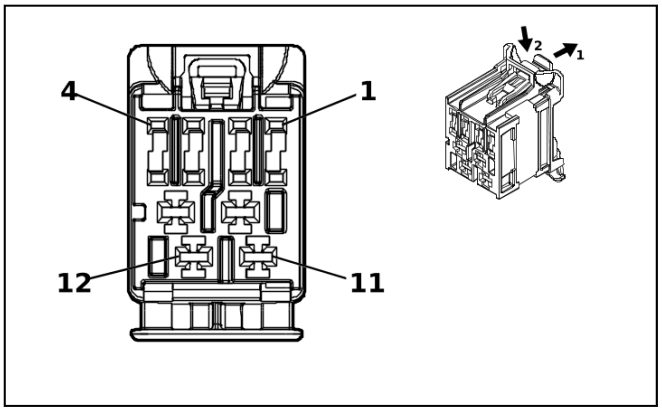

5203797

Connector Part Information

- Harness Type: Body Wiring Harness
- OEM Connector: 160026-0002
- Service Connector: 13509989
- Description: 12-Way F 1.2, 2.8 stAK50h Series(GN)

Terminal Part Information

Terminal Type ID	Terminated Lead	Diagnostic Test Probe	Terminal Removal Tool
I	84729890	J-35616-12 (BU)	J-38125-215A
II	87814662	J-35616-35 (VT)	J-38125-557

K219 Lighting Control Module X3

Pin	Size	Color	Circuit	Function	Terminal Type ID	Option
(1) 1	(1) 0.5	(1) GY / BN	(1) 10749	(1) Sequential Turn Lamp Enable Signal	(1) I	(1) —
2 - 3	—	—	—	Not Occupied	—	—
(4) 4	(4) 0.5	(4) YE	(4) 312	(4) Right Headlamp Low Beam Control	(4) I	(4) —
5 - 8	—	—	—	Not Occupied	—	—

Pin	Size	Color	Circuit	Function	Terminal Type ID	Option
(9) 9	(9) 1	(9) RD / BU	(9) 540	(9) Battery Positive Voltage	(9) II	(9) —
(10) 10	(10) 1	(10) RD / BN	(10) 1440	(10) Battery Positive Voltage	(10) II	(10) —
11	—	—	—	Not Occupied	—	—
(12) 12	(12) 0.5	(12) BU / GN	(12) 1253	(12) Right Front Park Lamp Control	(12) II	(12) —

K219 Lighting Control Module X4

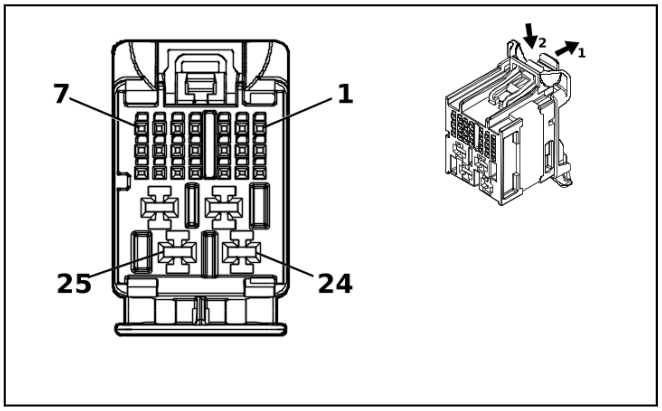

5203416

Connector Part Information

- Harness Type: Body Wiring Harness
- OEM Connector: 160027-0015
- Service Connector: 13534969
- Description: 25-Way F 0.5 MQS, 2.8 MCP Series(PU with GY Inner Connector)

Terminal Part Information

Terminal Type ID	Terminated Lead	Diagnostic Test Probe	Terminal Removal Tool
I	19370262	EL-35616-58 (BK)	EL-38125-58
II	87814662	J-35616-35 (VT)	J-38125-557

K219 Lighting Control Module X4

Pin	Size	Color	Circuit	Function	Terminal Type ID	Option
1 - 2	—	—	—	Not Occupied	—	—
(3) 3	(3) 0.35	(3) BU / GN	(3) 4103	(3) AUTOSAR CAN Bus [+] 9 Serial Data	(3) I	(3) —
(4) 4	(4) 0.35	(4) WH / GN	(4) 4102	(4) AUTOSAR CAN Bus [-] 9 Serial Data	(4) I	(4) —
(5) 5	(5) 0.35	(5) BU / GN	(5) 4103	(5) AUTOSAR CAN Bus [+] 9 Serial Data	(5) I	(5) —
(6) 6	(6) 0.35	(6) WH / GN	(6) 4102	(6) AUTOSAR CAN Bus [-] 9 Serial Data	(6) I	(6) —
(7) 7	(7) 0.35	(7) WH / BU	(7) 6311	(7) Cruise/ETC/TCC Brake Signal	(7) I	(7) —
(8) 8	(8) 0.35	(8) VT / YE	(8) 8868	(8) Police Liftgate Strobe Enable 1 Signal	(8) I	(8) —

Pin	Size	Color	Circuit	Function	Terminal Type ID	Option
(9) 9	(9) 0.35	(9) VT / GN	(9) 8869	(9) Police Liftgate Strobe Rear On OFF Control	(9) I	(9) —
10 - 11	—	—	—	Not Occupied	—	—
(12) 12	(12) 0.35	(12) BU / GN	(12) 8864	(12) Police Tail Lamp Red/Red Alternate Flash Enable Signal	(12) I	(12) —
(13) 13	(13) 0.35	(13) GY / GN	(13) 8865	(13) Police Tail Lamp Red/White Alternate Flash Enable Signal	(13) I	(13) —
(14) 14	(14) 0.35	(14) GN	(14) 8863	(14) Police High Beam Alternate Flash Enable Signal	(14) I	(14) —
(15) 15	(15) 0.35	(15) VT / BU	(15) 4001	(15) Left Rear Door Lock Switch Lock Control	(15) I	(15) —
(16) 16	(16) 0.35	(16) WH / YE	(16) 4002	(16) Left Rear Door Lock Switch Unlock Control	(16) I	(16) —
(17) 17	(17) 0.35	(17) GN / BN	(17) 4003	(17) Right Rear Door Lock Switch Lock Control	(17) I	(17) —
(18) 18	(18) 0.35	(18) BU / GY	(18) 4004	(18) Right Rear Door Lock Switch Unlock Control	(18) I	(18) —
(19) 19	(19) 0.35	(19) GY / WH	(19) 10137	(19) Radio Audio Mute Police Signal	(19) I	(19) —
(20) 20	(20) 0.35	(20) BU / YE	(20) 2279	(20) Liftgate Window Ajar Switch Signal	(20) I	(20) —
(21) 21	(21) 0.35	(21) VT / GY	(21) 1303	(21) Liftgate Ajar Switch Signal 1	(21) I	(21) —
(22) 22	(22) 1	(22) RD / BN	(22) 1140	(22) Battery Positive Voltage	(22) II	(22) —
(23) 23	(23) 1	(23) BK / WH	(23) 1151	(23) Signal Ground	(23) II	(23) —
(24) 24	(24) 1	(24) RD / GN	(24) 1540	(24) Battery Positive Voltage	(24) II	(24) —
(25) 25	(25) 1	(25) BK / WH	(25) 1151	(25) Signal Ground	(25) II	(25) —

K219 Lighting Control Module X5

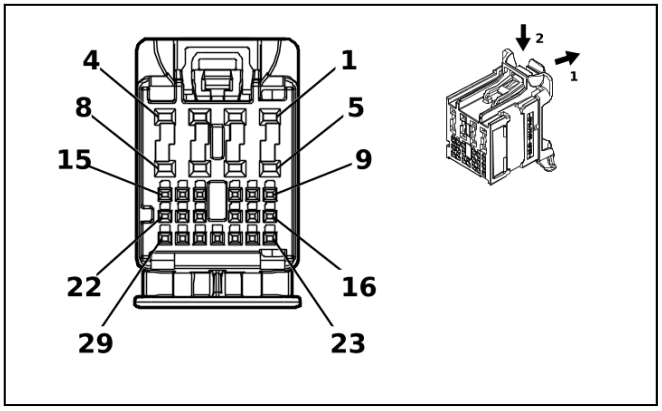

5203373

Connector Part Information

- Harness Type: Body Wiring Harness
- OEM Connector: 160029-0013
- Service Connector: 13534975
- Description: 29-Way F 0.5 NANO, 1.2 MCON, stAK50h Series(BU with GY Inner Connector)

Terminal Part Information

Terminal Type ID	Terminated Lead	Diagnostic Test Probe	Terminal Removal Tool
I	19370262	EL-35616-58 (BK)	EL-38125-58
II	84729890	J-35616-12 (BU)	J-38125-215A

K219 Lighting Control Module X5

Pin	Size	Color	Circuit	Function	Terminal Type ID	Option
(1) 1	(1) 0.5	(1) VT	(1) 8866	(1) Police Liftgate Strobe Control	(1) II	(1) —
(2) 2	(2) 0.5	(2) BN / GY	(2) 6995	(2) Right Rear Park Lamp Control	(2) II	(2) —
(3) 3	(3) 0.5	(3) BN / GY	(3) 5061	(3) Left Front Fog Lamp Control	(3) II	(3) —
(4) 4	(4) 0.5	(4) BU / VT	(4) 1335	(4) Right Rear Turn Signal Lamp Control 2	(4) II	(4) —
(5) 5	(5) 0.5	(5) GN / WH	(5) 24	(5) Backup Lamp Control	(5) II	(5) —
(6) 6	(6) 0.5	(6) BN / BU	(6) 6993	(6) Left Rear Park Lamp Control	(6) II	(6) —
7	—	—	—	Not Occupied	—	—
(8) 8	(8) 0.5	(8) BU / WH	(8) 1334	(8) Left Rear Turn Signal Lamp Control 2	(8) II	(8) —
(9) 9	(9) 0.35	(9) GN / GY	(9) 2115	(9) Right Turn Signal Lamp Control 2	(9) I	(9) —
(10) 10	(10) 0.35	(10) WH / GY	(10) 2114	(10) Left Turn Signal Lamp Control 2	(10) I	(10) —
(11) 11	(11) 0.35	(11) GY	(11) 1715	(11) Windshield Wiper Switch High Signal	(11) I	(11) —
(13) 13	(13) 0.35	(13) BU / BN	(13) 7539	(13) Right Front DRL Control	(13) I	(13) —
14	—	—	—	Not Occupied	—	—
(15) 15	(15) 0.35	(15) GY / GN	(15) 6190	(15) Liftgate Window/Rear Compartment Lid, Exterior Unlatch Signal	(15) I	(15) —
(16) 16	(16) 0.35	(16) WH / YE	(16) 7541	(16) Right Rear Stop Lamp Control	(16) I	(16) —
17	—	—	—	Not Occupied	—	—
(18) 18	(18) 0.35	(18) VT / WH	(18) 1139	(18) Run/Crank Ignition 1 Voltage	(18) I	(18) —
20 - 21	—	—	—	Not Occupied	—	—
(22) 22	(22) 0.35	(22) GN / WH	(22) 2270	(22) Rear Window Washer Relay Control	(22) I	(22) —
(23) 23	(23) 0.35	(23) WH / VT	(23) 6567	(23) Rear Turn Signal Lamp Feedback Signal	(23) I	(23) —
(24) 24	(24) 0.35	(24) WH / BK	(24) 7544	(24) Right Rear Turn Signal Lamp Feedback Signal	(24) I	(24) —
(25) 25	(25) 0.35	(25) BN / YE	(25) 820	(25) Center High Mounted Stop Lamp Supply Voltage	(25) I	(25) —
(26) 26	(26) 0.35	(26) GN / BN	(26) 319	(26) Right Rear Trailer Stop/Turn Lamp Control	(26) I	(26) —
(27) 27	(27) 0.35	(27) BU / BN	(27) 38	(27) Backup Lamp Relay Control	(27) I	(27) —

Pin	Size	Color	Circuit	Function	Terminal Type ID	Option
(28) 28	(28) 0.35	(28) GY / YE	(28) 7542	(28) Left Rear Stop Lamp Control	(28) I	(28) —
(29) 29	(29) 0.35	(29) GY / BU	(29) 7538	(29) Left Front DRL Control	(29) I	(29) —

K230 Front Floor Console Control Module (DCH)

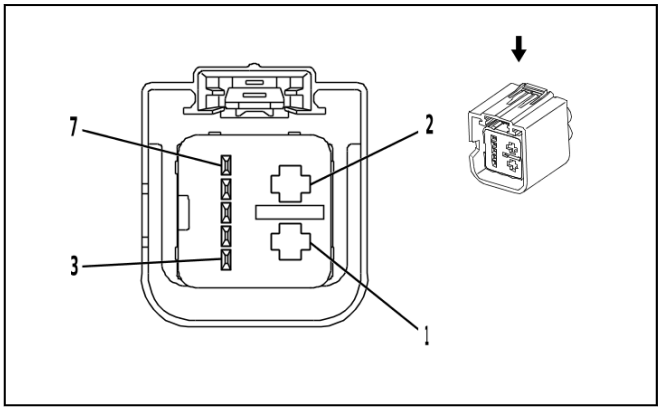

2282932

Connector Part Information

- Harness Type: Front Floor Console Wiring Harness
- OEM Connector: 1-1732115-2
- Service Connector: Service by Harness - See Part Catalog
- Description: 7-Way F 0.64, 2.8 Kaizen Timer Series, Sealed(GY)

Terminal Part Information

Terminal Type ID	Terminated Lead	Diagnostic Test Probe	Terminal Removal Tool
I	Not required	J-35616-4A (PU)	No Tool Required
II	Not required	J-35616-64B (L-BU)	No Tool Required

K230 Front Floor Console Control Module (DCH)

Pin	Size	Color	Circuit	Function	Terminal Type ID	Option
(1) 1	(1) 1	(1) BK	(1) 1250	(1) Ground	(1) I	(1) —
(2) 2	(2) 1	(2) RD / VT	(2) 8640	(2) Battery Positive Voltage	(2) I	(2) —
3	—	—	—	Not Occupied	—	—
(4) 4	(4) 0.5	(4) GN / VT	(4) 2857	(4) Body Control Module LIN Bus 11	(4) II	(4) —
5 - 7	—	—	—	Not Occupied	—	—

K299R Audio/Video Interface Rear Module X1 (UW9)

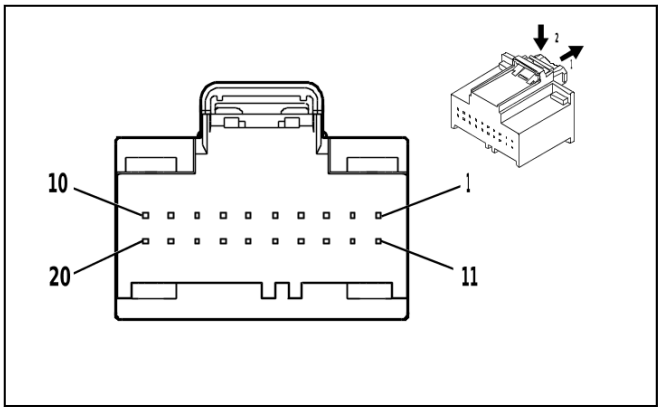

5112891

Connector Part Information

- Harness Type: Body Wiring Harness
- OEM Connector: 31410-0205
- Service Connector: 13525990
- Description: 20-Way F 0.64 Series(BK)

Terminal Part Information

Terminal Type ID	Terminated Lead	Diagnostic Test Probe	Terminal Removal Tool
I	13584547	J-35616-64B (L-BU)	J-38125-215A
II	Service by Cable	J-35616-64B (L-BU)	J-38125-215A

K299R Audio/Video Interface Rear Module X1 (UW9)

Pin	Size	Color	Circuit	Function	Terminal Type ID	Option
(1) 1	(1) 0.75	(1) RD / BN	(1) 3640	(1) Battery Positive Voltage	(1) I	(1) —
2	—	—	—	Not Occupied	—	—
(3) 3	(3) 0.5	(3) BU / WH	(3) 4985	(3) AUTOSAR CAN Bus [+] 5 Serial Data	(3) I	(3) —
(4) 4	(4) 0.5	(4) BU / YE	(4) 4984	(4) AUTOSAR CAN Bus [-] 5 Serial Data	(4) I	(4) —
5 - 8	—	—	—	Not Occupied	—	—
(9) 9	(9) 0.35	(9) WH	(9) 8580	(9) Automotive Audio Bus A2B Serial Data 1 [+]	(9) II	(9) —
(10) 10	(10) 0.35	(10) GN	(10) 8579	(10) Automotive Audio Bus A2B Serial Data 1 [-]	(10) II	(10) —
11	—	—	—	Not Occupied	—	—
(12) 12	(12) 0.75	(12) BK / WH	(12) 1451	(12) Signal Ground	(12) I	(12) —
(13) 13	(13) 0.5	(13) BU / WH	(13) 4985	(13) AUTOSAR CAN Bus [+] 5 Serial Data	(13) I	(13) —
(14) 14	(14) 0.5	(14) BU / YE	(14) 4984	(14) AUTOSAR CAN Bus [-] 5 Serial Data	(14) I	(14) —
15	—	—	—	Not Occupied	—	—
(16) 16	(16) 0.35	(16) VT	(16) 7212	(16) Ethernet Bus 5 [-]	(16) II	(16) —
(17) 17	(17) 0.35	(17) VT / WH	(17) 7213	(17) Ethernet Bus 5 [+]	(17) II	(17) —

Pin	Size	Color	Circuit	Function	Terminal Type ID	Option
18	—	—	—	Not Occupied	—	—
(19) 19	(19) 0.35	(19) GN	(19) 8579	(19) Automotive Audio Bus A2B Serial Data 1 [-]	(19) II	(19) —
(20) 20	(20) 0.35	(20) WH	(20) 8580	(20) Automotive Audio Bus A2B Serial Data 1 [+]	(20) II	(20) —

K299R Audio/Video Interface Rear Module X2 (UW9)

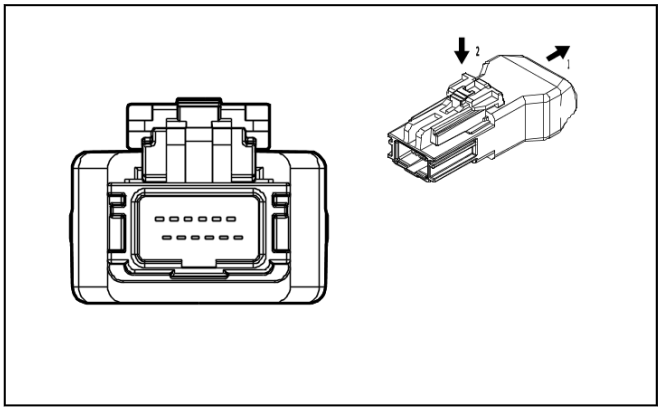

4584321

Connector Part Information

- Harness Type: Body Wiring Harness
- OEM Connector: 111146-3307
- Service Connector: Service by Cable Assembly — See Part Catalog
- Description: 12-Way M 2.0 HSAL-2 Series(GY)

Terminal Part Information

Terminal Type ID	Terminated Lead	Diagnostic Test Probe	Terminal Removal Tool
I	Not required	No Tool Required	No Tool Required

K299R Audio/Video Interface Rear Module X2 (UW9)

Pin	Size	Color	Circuit	Function	Terminal Type ID	Option
—	—	LVDS	—	(Infotainment) Infotainment Display Signal	I	—

K299R Audio/Video Interface Rear Module X3 (UW9)

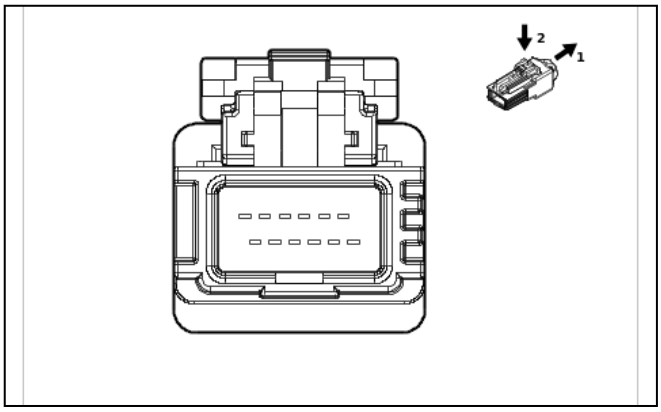

6186830

Connector Part Information
- Harness Type: Body Wiring Harness
- OEM Connector: 11146-7203
- Service Connector: Service by Cable Assembly — See Part Catalog
- Description: 12-Way M 2.0 HSAL-2 Series(BN)

Terminal Part Information

Terminal Type ID	Terminated Lead	Diagnostic Test Probe	Terminal Removal Tool
I	Not required	No Tool Required	No Tool Required

K299R Audio/Video Interface Rear Module X3 (UW9)

Pin	Size	Color	Circuit	Function	Terminal Type ID	Option
—	—	LVDS	—	Rear Seat Infotainment Auxiliary Audio/Video Jack LVDS (Low Voltage Differential Signaling) Low Reference	I	—

K313 Interior Object Detection Module

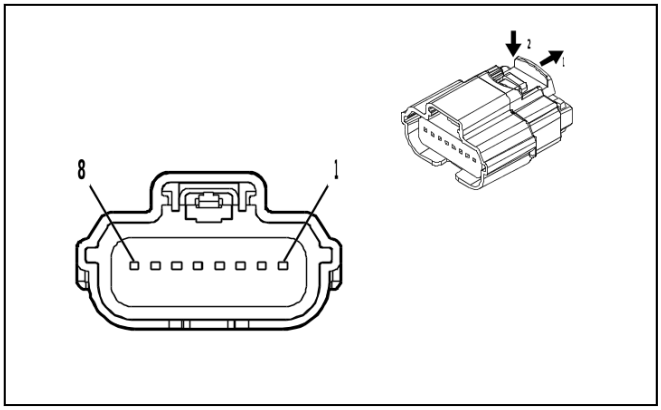

4708234

Connector Part Information
- Harness Type: Body Wiring Harness
- OEM Connector: 31404-9110
- Service Connector: 84677313
- Description: 8-Way F 64 Series, Sealed(BK)

Terminal Part Information

Terminal Type ID	Terminated Lead	Diagnostic Test Probe	Terminal Removal Tool
I	Not required	J-35616-64B (L-BU)	No Tool Required

K313 Interior Object Detection Module

Pin	Size	Color	Circuit	Function	Terminal Type ID	Option
(1) 1	(1) 0.35	(1) BK / WH	(1) 1351	(1) Signal Ground	(1) I	(1) —
2 - 3	—	—	—	Not Occupied	—	—
(4) 4	(4) 0.35	(4) RD / GN	(4) 11440	(4) Battery Positive Voltage	(4) I	(4) —
5 - 6	—	—	—	Not Occupied	—	—
(7) 7	(7) 0.35	(7) WH / GN	(7) 4102	(7) AUTOSAR CAN Bus [-] 9 Serial Data	(7) I	(7) —
(8) 8	(8) 0.35	(8) BU / GN	(8) 4103	(8) AUTOSAR CAN Bus [+] 9 Serial Data	(8) I	(8) —

M4P Programmable Air Inlet Valve Actuator

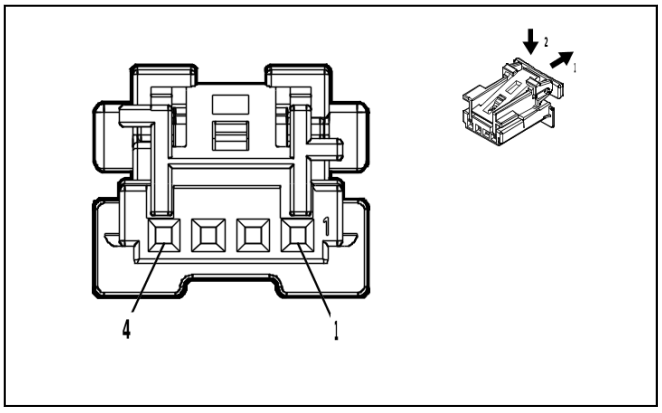

4997407

Connector Part Information

- Harness Type: Heater Wiring Harness
- OEM Connector: 2294218-1
- Service Connector: Service by Harness - See Part Catalog
- Description: 4-Way F 0.64 Micro-Quadlock Series(BK)

Terminal Part Information

Terminal Type ID	Terminated Lead	Diagnostic Test Probe	Terminal Removal Tool
I	Not required	J-35616-64B (L-BU)	No Tool Required

M4P Programmable Air Inlet Valve Actuator

Pin	Size	Color	Circuit	Function	Terminal Type ID	Option
(1) 1	(1) 0.35	(1) BK	(1) 1050	(1) Ground	(1) I	(1) —
(2) 2	(2) 0.35	(2) BU	(2) 2852	(2) Body Control Module LIN Bus 6	(2) I	(2) —

Pin	Size	Color	Circuit	Function	Terminal Type ID	Option
(3) 3	(3) 0.35	(3) BK	(3) 1050	(3) Ground	(3) I	(3) —
(4) 4	(4) 0.35	(4) RD	(4) 4634	(4) HVAC Remote Enable Signal	(4) I	(4) —

M6BP Rear Programmable Temperature Valve Actuator

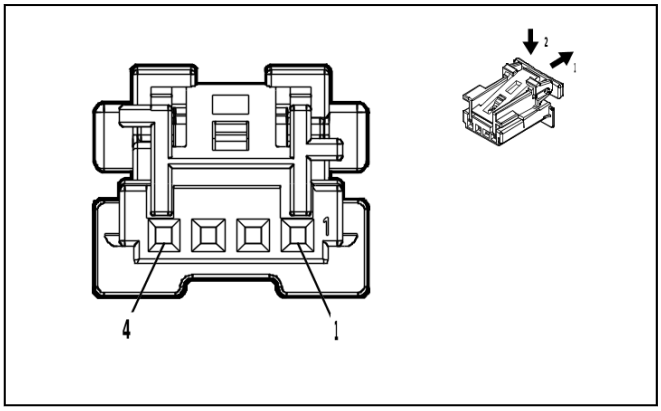

4997407

Connector Part Information

- Harness Type: Auxiliary Heater and Air Conditioning Wiring Harness
- OEM Connector: 2294218-1
- Service Connector: Service by Harness - See Part Catalog
- Description: 4-Way F 0.64 Micro-Quadlock Series(BK)

Terminal Part Information

Terminal Type ID	Terminated Lead	Diagnostic Test Probe	Terminal Removal Tool
I	Not required	J-35616-64B (L-BU)	No Tool Required

M6BP Rear Programmable Temperature Valve Actuator

Pin	Size	Color	Circuit	Function	Terminal Type ID	Option
(1) 1	(1) 0.35	(1) BK / WH	(1) 1450	(1) Ground	(1) I	(1) —
(2) 2	(2) 0.35	(2) GN / WH	(2) 2853	(2) Body Control Module LIN Bus 7	(2) I	(2) —
3	—	—	—	Not Occupied	—	—
(4) 4	(4) 0.35	(4) RD / WH	(4) 4634	(4) HVAC Remote Enable Signal	(4) I	(4) —

M6PL Programmable Temperature Valve Actuator - Left

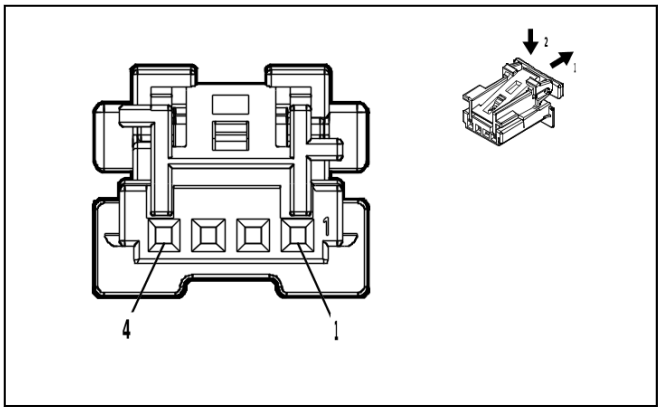

4997407

Connector Part Information

- Harness Type: Heater Wiring Harness
- OEM Connector: 2294218-1
- Service Connector: Service by Harness - See Part Catalog
- Description: 4-Way F 0.64 Micro-Quadlock Series(BK)

Terminal Part Information

Terminal Type ID	Terminated Lead	Diagnostic Test Probe	Terminal Removal Tool
I	Not required	J-35616-64B (L-BU)	No Tool Required

M6PL Programmable Temperature Valve Actuator - Left

Pin	Size	Color	Circuit	Function	Terminal Type ID	Option
(1) 1	(1) 0.35	(1) BK	(1) 1050	(1) Ground	(1) I	(1) —
(2) 2	(2) 0.35	(2) BU	(2) 2852	(2) Body Control Module LIN Bus 6	(2) I	(2) —
(3) 3	(3) 0.35	(3) BK	(3) 1050	(3) Ground	(3) I	(3) —
(4) 4	(4) 0.35	(4) RD	(4) 4634	(4) HVAC Remote Enable Signal	(4) I	(4) —

M6PR Programmable Temperature Valve Actuator - Right

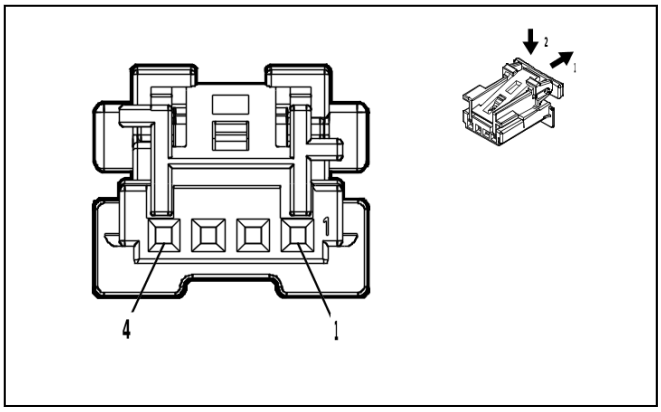

4997407

Connector Part Information

- Harness Type: Heater Wiring Harness
- OEM Connector: 2294218-1
- Service Connector: Service by Harness - See Part Catalog
- Description: 4-Way F 0.64 Micro-Quadlock Series(BK)

Terminal Part Information

Terminal Type ID	Terminated Lead	Diagnostic Test Probe	Terminal Removal Tool
I	Not required	J-35616-64B (L-BU)	No Tool Required

M6PR Programmable Temperature Valve Actuator - Right

Pin	Size	Color	Circuit	Function	Terminal Type ID	Option
(1) 1	(1) 0.35	(1) BK	(1) 1050	(1) Ground	(1) I	(1) —
(2) 2	(2) 0.35	(2) BU	(2) 2852	(2) Body Control Module LIN Bus 6	(2) I	(2) —
3	—	—	—	Not Occupied	—	—
(4) 4	(4) 0.35	(4) RD	(4) 4634	(4) HVAC Remote Enable Signal	(4) I	(4) —

M8 Blower Motor

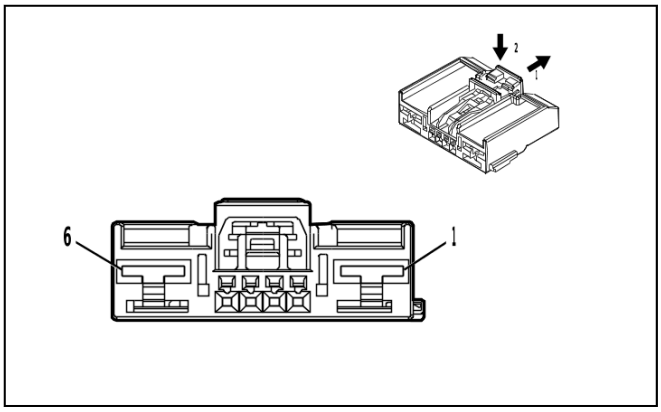

4650258

Connector Part Information
- Harness Type: Instrument Panel Wiring Harness
- OEM Connector: 7289-7139-30
- Service Connector: 19356432
- Description: 6-Way F 0.64, 6.3 Series(BK)

Terminal Part Information

Terminal Type ID	Terminated Lead	Diagnostic Test Probe	Terminal Removal Tool
I	Not required	J-35616-42 (RD)	No Tool Required
II	Not required	J-35616-64B (L-BU)	No Tool Required

M8 Blower Motor

Pin	Size	Color	Circuit	Function	Terminal Type ID	Option
(1) 1	(1) 5	(1) RD / GY	(1) 2042	(1) Battery Positive Voltage	(1) I	(1) —
(2) 2	(2) 0.35	(2) BU / GY	(2) 754	(2) Blower Motor Speed Control	(2) II	(2) —
(3) 3	(3) 0.35	(3) GN / BU	(3) 761	(3) Blower Speed Feedback Signal	(3) II	(3) —
4 - 5	—	—	—	Not Occupied	—	—
(6) 6	(6) 5	(6) BK	(6) 1050	(6) Ground	(6) I	(6) —

M8B Blower Motor - Rear

—

Connector Part Information
- Harness Type: Rear Blower Motor
- OEM Connector: Not Available
- Service Connector: Service by Harness - See Part Catalog
- Description: 2-Way

Terminal Part Information

Terminal Type ID	Terminated Lead	Diagnostic Test Probe	Terminal Removal Tool
I	Not required	No Tool Required	No Tool Required

M8B Blower Motor - Rear

Pin	Size	Color	Circuit	Function	Terminal Type ID	Option
(1) 1	(1) 2.5	(1) BU / BK	(1) 5988	(1) Rear Blower Motor Control	(1) I	(1) —
(2) 2	(2) 2.5	(2) GY / BN	(2) 101	(2) Blower Motor Control 2	(2) I	(2) —

M10 Charge Air Cooler Coolant Pump (LZ0)

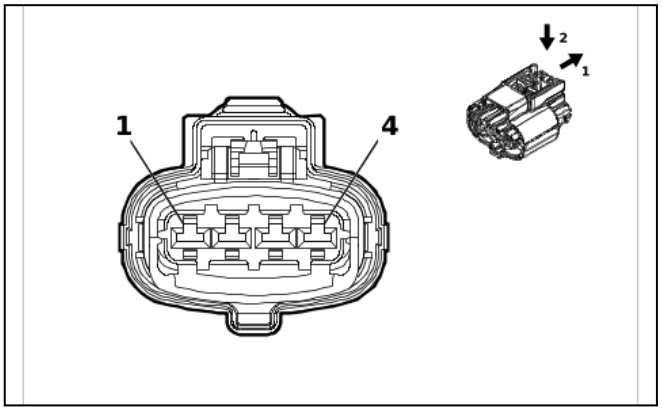

5869064

Connector Part Information

- Harness Type: Engine Wiring Harness
- OEM Connector: 35810340
- Service Connector: 19371209
- Description: 4-Way F 2.8 CTS Series, Sealed(BK)

Terminal Part Information

Terminal Type ID	Terminated Lead	Diagnostic Test Probe	Terminal Removal Tool
I	Not required	J-35616-4A (PU)	No Tool Required

M10 Charge Air Cooler Coolant Pump (LZ0)

Pin	Size	Color	Circuit	Function	Terminal Type ID	Option
(1) 1	(1) 1	(1) VT / BU	(1) 5294	(1) Powertrain Main Relay Fused Supply Voltage 5	(1) I	(1) —
(2) 2	(2) 0.5	(2) GN / VT	(2) 4621	(2) Engine Control Module LIN Bus 1	(2) I	(2) —
3	—	—	—	Not Occupied	—	—
(4) 4	(4) 1	(4) BK	(4) 6550	(4) Ground	(4) I	(4) —

M26 Front Drive Axle Actuator (NP0 / NQH)

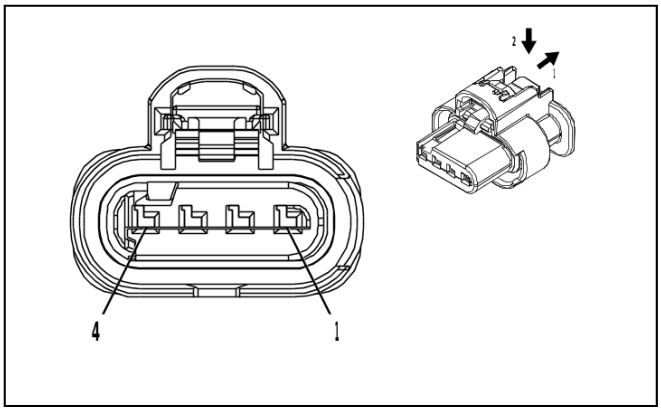

4210809

Connector Part Information

- Harness Type: Transfer Case Selector Shift Control Switch Wiring Harness Extension Harness
- OEM Connector: 1-2296696-1
- Service Connector: Service by Harness - See Part Catalog
- Description: 4-Way F 1.2 MCON-CB Series, Sealed(BK)

Terminal Part Information

Terminal Type ID	Terminated Lead	Diagnostic Test Probe	Terminal Removal Tool
I	Not required	J-35616-12 (BU)	No Tool Required

M26 Front Drive Axle Actuator (NP0 / NQH)

Pin	Size	Color	Circuit	Function	Terminal Type ID	Option
(1) 1	(1) 0.5	(1) GN	(1) 8016	(1) Secondary Axle Motor Control	(1) I	(1) —
(2) 2	(2) 0.5	(2) GY / BK	(2) 1570	(2) Front Axle Actuator Control	(2) I	(2) —
(3) 3	(3) 0.5	(3) YE / WH	(3) 1695	(3) 4WD Locked Range Indicator Control	(3) I	(3) —
(4) 4	(4) 0.5	(4) BK	(4) 450	(4) Ground	(4) I	(4) —

M31L Liftgate Power Assist Actuator - Left (TB5 / TCP)

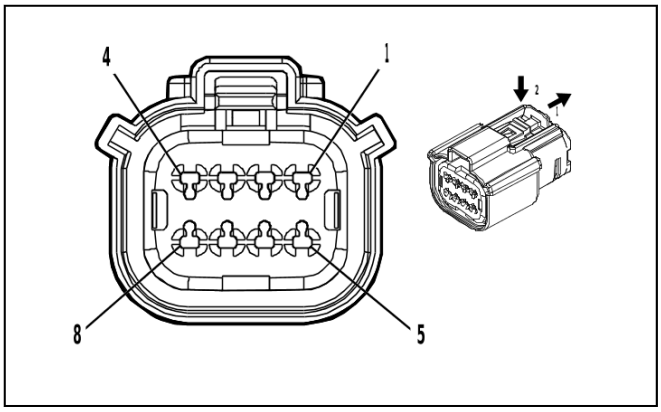

4846407

Connector Part Information

- Harness Type: Liftgate Jumper
- OEM Connector: 13520074
- Service Connector: Service by Harness - See Part Catalog
- Description: 8-Way F 1.5 MX Series, Sealed(BK)

Terminal Part Information

Terminal Type ID	Terminated Lead	Diagnostic Test Probe	Terminal Removal Tool
I	Not required	No Tool Required	No Tool Required

M31L Liftgate Power Assist Actuator - Left (TB5 / TCP)

Pin	Size	Color	Circuit	Function	Terminal Type ID	Option
(1) 1	(1) —	(1) WH	(1) 4689	(1) Rear Closure Open/Close Motor Open Control	(1) I	(1) —
2	—	—	—	Not Occupied	—	—
(3) 3	(3) —	(3) BN / YE	(3) 4686	(3) Rear Closure Position Sensor Signal 2	(3) I	(3) —
(4) 4	(4) —	(4) BN / RD	(4) 4683	(4) Rear Closure Position Sensor Voltage Reference	(4) I	(4) —
(5) 5	(5) —	(5) BN / WH	(5) 4690	(5) Rear Closure Open/Close Motor Close Control	(5) I	(5) —
(6) 6	(6) —	(6) BK / GN	(6) 4687	(6) Rear Closure Position Sensor Low Reference	(6) I	(6) —
(7) 7	(7) —	(7) BU / WH	(7) 4685	(7) Rear Closure Position Sensor Signal 1	(7) I	(7) —
8	—	—	—	Not Occupied	—	—

M33 Liftgate Window Latch

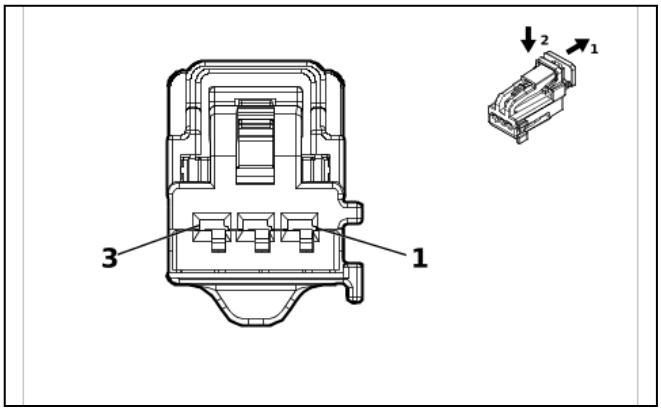

6548001

Connector Part Information

- Harness Type: Liftgate Wiring Harness
- OEM Connector: 15509304
- Service Connector: Service by Harness - See Part Catalog
- Description: 3-Way F 1.5 YESC Series(BK)

Terminal Part Information

Terminal Type ID	Terminated Lead	Diagnostic Test Probe	Terminal Removal Tool
I	Not required	J-35616-2A (GY)	No Tool Required

M33 Liftgate Window Latch

Pin	Size	Color	Circuit	Function	Terminal Type ID	Option
(1) 1	(1) 0.5	(1) BU / GN	(1) 4089	(1) Rear Closure Motor Control	(1) I	(1) —
(2) 2	(2) 0.5	(2) BK	(2) 2050	(2) Ground	(2) I	(2) —
(3) 3	(3) 0.5	(3) BU / YE	(3) 2279	(3) Liftgate Window Ajar Switch Signal	(3) I	(3) —

M37BP Rear Programmable Mode Valve Actuator

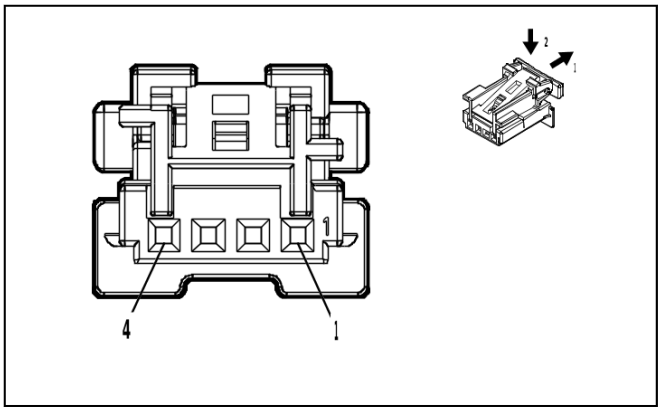

4997407

Connector Part Information

- Harness Type: Auxiliary Heater and Air Conditioning Wiring Harness
- OEM Connector: 2294218-1
- Service Connector: Service by Harness - See Part Catalog
- Description: 4-Way F 0.64 Micro-Quadlock Series(BK)

Terminal Part Information

Terminal Type ID	Terminated Lead	Diagnostic Test Probe	Terminal Removal Tool
I	Not required	J-35616-64B (L-BU)	No Tool Required

M37BP Rear Programmable Mode Valve Actuator

Pin	Size	Color	Circuit	Function	Terminal Type ID	Option
(1) 1	(1) 0.35	(1) BK / WH	(1) 1450	(1) Ground	(1) I	(1) —
(2) 2	(2) 0.35	(2) GN / WH	(2) 2853	(2) Body Control Module LIN Bus 7	(2) I	(2) —
(3) 3	(3) 0.35	(3) BK / WH	(3) 1450	(3) Ground	(3) I	(3) —
(4) 4	(4) 0.35	(4) RD / WH	(4) 4634	(4) HVAC Remote Enable Signal	(4) I	(4) —

M37P Programmable Mode Valve Actuator

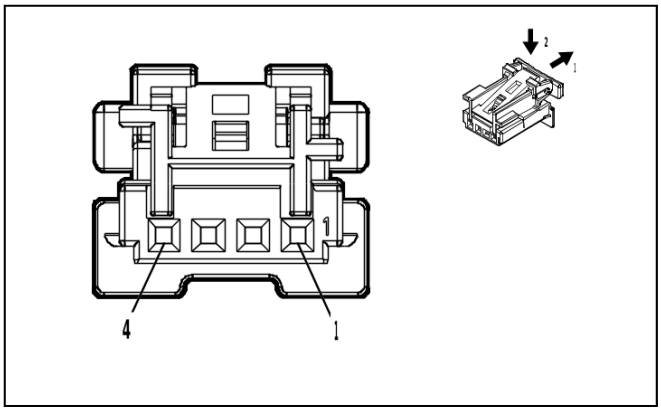

4997407

Connector Part Information

- Harness Type: Heater Wiring Harness
- OEM Connector: 2294218-1
- Service Connector: Service by Harness - See Part Catalog
- Description: 4-Way F 0.64 Micro-Quadlock Series(BK)

Terminal Part Information

Terminal Type ID	Terminated Lead	Diagnostic Test Probe	Terminal Removal Tool
I	Not required	J-35616-64B (L-BU)	No Tool Required

M37P Programmable Mode Valve Actuator

Pin	Size	Color	Circuit	Function	Terminal Type ID	Option
(1) 1	(1) 0.35	(1) BK	(1) 1050	(1) Ground	(1) I	(1) —
(2) 2	(2) 0.35	(2) BU	(2) 2852	(2) Body Control Module LIN Bus 6	(2) I	(2) —
3	—	—	—	Not Occupied	—	—
(4) 4	(4) 0.35	(4) RD	(4) 4634	(4) HVAC Remote Enable Signal	(4) I	(4) —

M45 Rear Window Wiper Motor

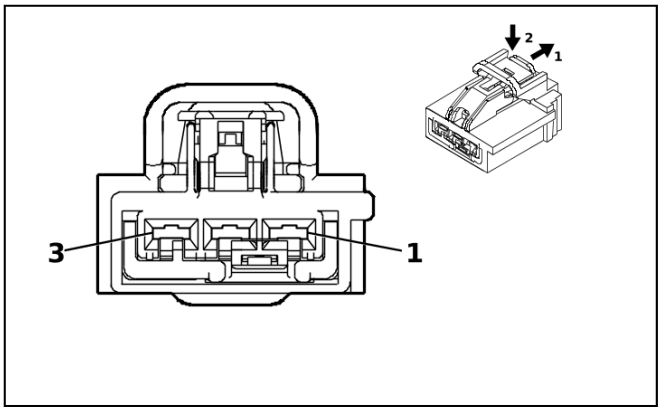

5215435

Connector Part Information

- Harness Type: Liftgate Wiring Harness
- OEM Connector: 7289-9738-40
- Service Connector: Service by Harness - See Part Catalog
- Description: 3-Way F 2.8 YESC Series(GY)

Terminal Part Information

Terminal Type ID	Terminated Lead	Diagnostic Test Probe	Terminal Removal Tool
I	Not required	J-35616-4A (PU)	No Tool Required

M45 Rear Window Wiper Motor

Pin	Size	Color	Circuit	Function	Terminal Type ID	Option
(1) 1	(1) 1	(1) BK	(1) 2050	(1) Ground	(1) I	(1) —
(2) 2	(2) 0.5	(2) GN / BU	(2) 2856	(2) Body Control Module LIN Bus 10	(2) I	(2) —
(3) 3	(3) 1	(3) RD / YE	(3) 3040	(3) Battery Positive Voltage	(3) I	(3) —

M50D Front Seat Tilt Adjuster Actuator - Driver

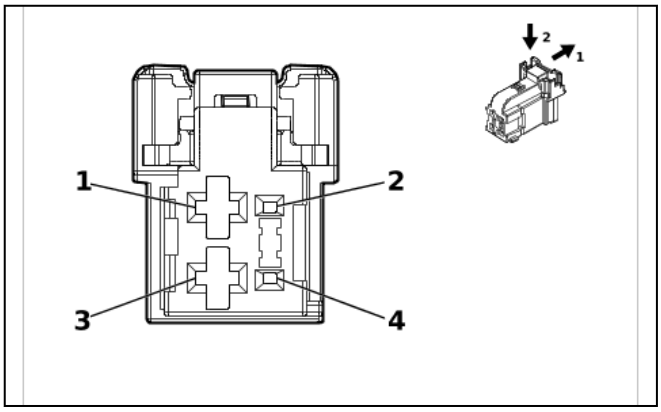

5410027

Connector Part Information

- Harness Type: Front Seat Wiring Harness - Driver
- OEM Connector: 13522742
- Service Connector: Service by Harness - See Part Catalog
- Description: 4-Way F 0.64, 2.8 Series(BK)

Terminal Part Information

Terminal Type ID	Terminated Lead	Diagnostic Test Probe	Terminal Removal Tool
I	Not required	No Tool Required	No Tool Required

M50D Front Seat Tilt Adjuster Actuator - Driver

Pin	Size	Color	Circuit	Function	Terminal Type ID	Option
(1) 1	(1) —	(1) BU / VT	(1) 287	(1) Driver Seat Front Vertical Motor Down Control	(1) I	(1) —
2	—	—	—	Not Occupied	—	—
(3) 3	(3) —	(3) GN / BN	(3) 286	(3) Driver Seat Front Vertical Motor Up Control	(3) I	(3) —
4	—	—	—	Not Occupied	—	—

M50P Front Seat Tilt Adjuster Actuator - Passenger (A7K)

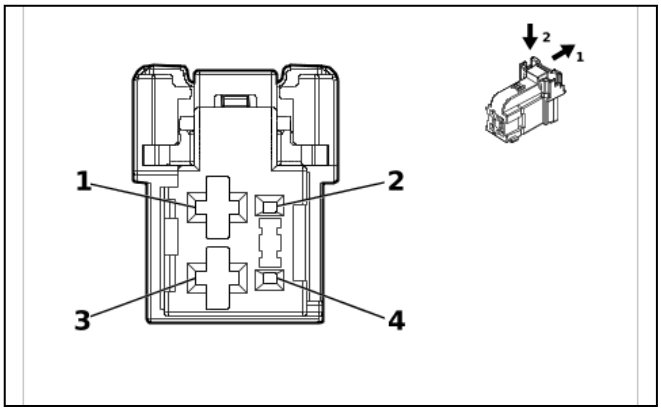

5410027

Connector Part Information

- Harness Type: Front Seat Wiring Harness - Passenger
- OEM Connector: 13522742
- Service Connector: Service by Harness - See Part Catalog
- Description: 4-Way F 0.64, 2.8 Series(BK)

Terminal Part Information

Terminal Type ID	Terminated Lead	Diagnostic Test Probe	Terminal Removal Tool
I	Not required	No Tool Required	No Tool Required

M50P Front Seat Tilt Adjuster Actuator - Passenger (A7K)

Pin	Size	Color	Circuit	Function	Terminal Type ID	Option
(1) 1	(1) —	(1) GN / VT	(1) 297	(1) Passenger Seat Front Vertical Motor Up Control	(1) I	(1) —
2	—	—	—	Not Occupied	—	—
(3) 3	(3) —	(3) GN / BU	(3) 298	(3) Passenger Seat Front Vertical Motor Down Control	(3) I	(3) —
4	—	—	—	Not Occupied	—	—

M51D Front Seat Adjuster Actuator - Driver

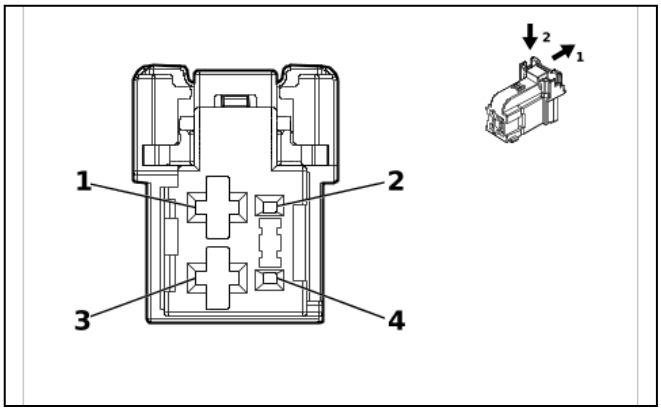

5410027

Connector Part Information

- Harness Type: Front Seat Wiring Harness - Driver
- OEM Connector: 13522742
- Service Connector: Service by Harness - See Part Catalog
- Description: 4-Way F 0.64, 2.8 Series(BK)

Terminal Part Information

Terminal Type ID	Terminated Lead	Diagnostic Test Probe	Terminal Removal Tool
I	Not required	No Tool Required	No Tool Required

M51D Front Seat Adjuster Actuator - Driver

Pin	Size	Color	Circuit	Function	Terminal Type ID	Option
(1) 1	(1) —	(1) GY / GN	(1) 284	(1) Driver Seat Horizontal Motor Rearward Control	(1) I	(1) —
2	—	—	—	Not Occupied	—	—
(3) 3	(3) —	(3) YE / BU	(3) 285	(3) Driver Seat Horizontal Motor Forward Control	(3) I	(3) —
4	—	—	—	Not Occupied	—	—

M51P Front Seat Adjuster Actuator - Passenger

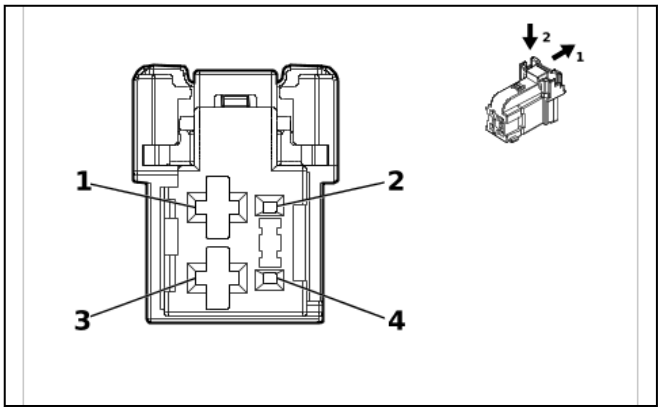

5410027

Connector Part Information

- Harness Type: Front Seat Wiring Harness - Passenger
- OEM Connector: 13522742
- Service Connector: Service by Harness - See Part Catalog
- Description: 4-Way F 0.64, 2.8 Series(BK)

Terminal Part Information

Terminal Type ID	Terminated Lead	Diagnostic Test Probe	Terminal Removal Tool
I	Not required	No Tool Required	No Tool Required

M51P Front Seat Adjuster Actuator - Passenger

Pin	Size	Color	Circuit	Function	Terminal Type ID	Option
(1) 1	(1) —	(1) YE / BU	(1) 290	(1) Passenger Seat Horizontal Motor Rearward Control	(1) I	(1) —
2	—	—	—	Not Occupied	—	—
(3) 3	(3) —	(3) YE / WH	(3) 296	(3) Passenger Seat Horizontal Motor Forward Control	(3) I	(3) —
4	—	—	—	Not Occupied	—	—

M53D Front Seat Back Lumbar Motor - Driver (AL9)

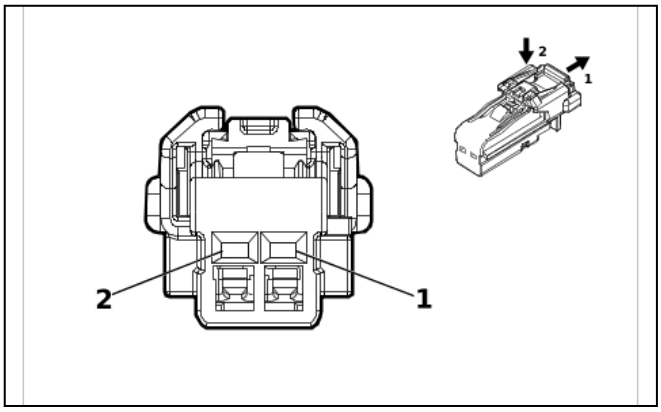

4115691

Connector Part Information
- Harness Type: Front Seat Wiring Harness - Driver
- OEM Connector: 13532422
- Service Connector: Service by Harness - See Part Catalog
- Description: 2-Way F 1.2 MCON Series(BK)

Terminal Part Information

Terminal Type ID	Terminated Lead	Diagnostic Test Probe	Terminal Removal Tool
I	Not required	No Tool Required	No Tool Required

M53D Front Seat Back Lumbar Motor - Driver (AL9)

Pin	Size	Color	Circuit	Function	Terminal Type ID	Option
(1) 1	(1) —	(1) BU	(1) 611	(1) Driver Seat Lumbar Support Motor Forward Control	(1) I	(1) —
(2) 2	(2) —	(2) VT	(2) 610	(2) Driver Seat Lumbar Support Motor Backward Control	(2) I	(2) —

M53P Front Seat Back Lumbar Motor - Passenger (AT9)

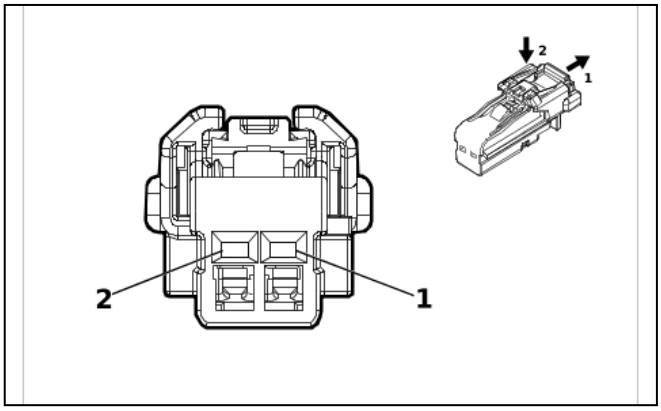

4115691

Connector Part Information
- Harness Type: Front Seat Wiring Harness - Passenger
- OEM Connector: 13532422
- Service Connector: Service by Harness - See Part Catalog
- Description: 2-Way F 1.2 MCON Series(BK)

Terminal Part Information

Terminal Type ID	Terminated Lead	Diagnostic Test Probe	Terminal Removal Tool
I	Not required	No Tool Required	No Tool Required

M53P Front Seat Back Lumbar Motor - Passenger (AT9)

Pin	Size	Color	Circuit	Function	Terminal Type ID	Option
(1) 1	(1) —	(1) BU	(1) 211	(1) Passenger Seat Lumbar Support Motor Forward Control	(1) I	(1) —
(2) 2	(2) —	(2) VT	(2) 210	(2) Passenger Seat Lumbar Support Motor Backward Control	(2) I	(2) —

M55D Front Seat Vertical Adjuster Actuator - Driver

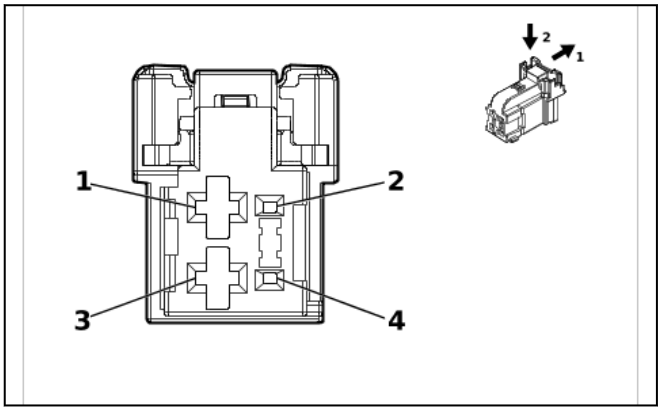

5410027

Connector Part Information

- Harness Type: Front Seat Wiring Harness - Driver
- OEM Connector: 13522742
- Service Connector: Service by Harness - See Part Catalog
- Description: 4-Way F 0.64, 2.8 Series(BK)

Terminal Part Information

Terminal Type ID	Terminated Lead	Diagnostic Test Probe	Terminal Removal Tool
I	Not required	No Tool Required	No Tool Required

M55D Front Seat Vertical Adjuster Actuator - Driver

Pin	Size	Color	Circuit	Function	Terminal Type ID	Option
(1) 1	(1) —	(1) GY / BU	(1) 283	(1) Driver Seat Rear Vertical Motor Down Control	(1) I	(1) —
2	—	—	—	Not Occupied	—	—
(3) 3	(3) —	(3) YE	(3) 282	(3) Driver Seat Rear Vertical Motor Up Control	(3) I	(3) —
4	—	—	—	Not Occupied	—	—

M55P Front Seat Vertical Adjuster Actuator - Passenger

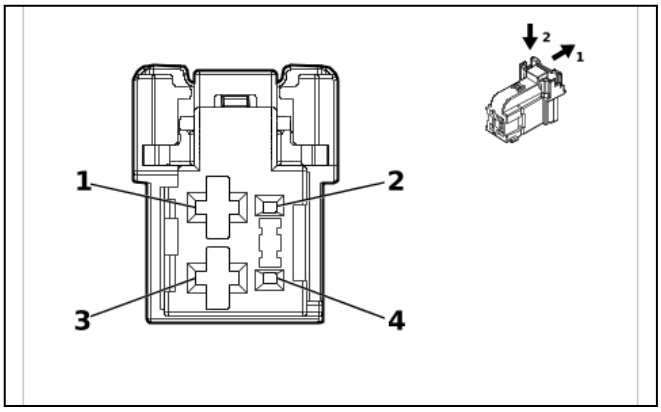

5410027

Connector Part Information

- Harness Type: Front Seat Wiring Harness - Passenger
- OEM Connector: 13522742
- Service Connector: Service by Harness - See Part Catalog
- Description: 4-Way F 0.64, 2.8 Series(BK)

Terminal Part Information

Terminal Type ID	Terminated Lead	Diagnostic Test Probe	Terminal Removal Tool
I	Not required	No Tool Required	No Tool Required

M55P Front Seat Vertical Adjuster Actuator - Passenger

Pin	Size	Color	Circuit	Function	Terminal Type ID	Option
(1) 1	(1) —	(1) BU / WH	(1) 289	(1) Passenger Seat Rear Vertical Motor Down Control	(1) I	(1) —
2	—	—	—	Not Occupied	—	—
(3) 3	(3) —	(3) GN / WH	(3) 288	(3) Passenger Seat Rear Vertical Motor Up Control	(3) I	(3) —
4	—	—	—	Not Occupied	—	—

M56D Front Seat Recliner Actuator - Driver

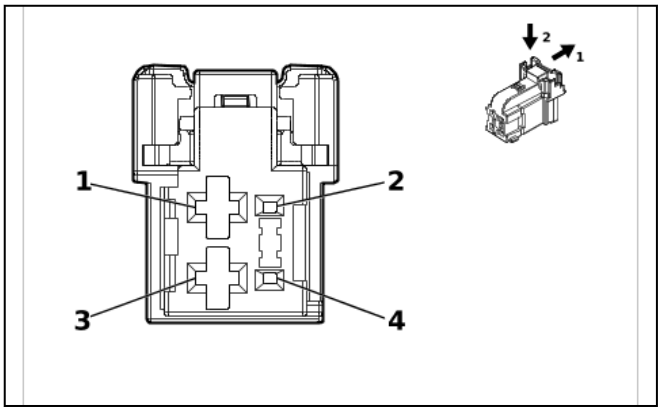

5410027

Connector Part Information

- Harness Type: Front Seat Wiring Harness - Driver
- OEM Connector: 13522742
- Service Connector: Service by Harness - See Part Catalog
- Description: 4-Way F 0.64, 2.8 Series(BK)

Terminal Part Information

Terminal Type ID	Terminated Lead	Diagnostic Test Probe	Terminal Removal Tool
I	Not required	No Tool Required	No Tool Required

M56D Front Seat Recliner Actuator - Driver

Pin	Size	Color	Circuit	Function	Terminal Type ID	Option
(1) 1	(1) —	(1) GN / YE	(1) 276	(1) Driver Seat Recline Motor Forward Control	(1) I	(1) —
2	—	—	—	Not Occupied	—	—
(3) 3	(3) —	(3) BU / YE	(3) 277	(3) Driver Seat Recline Motor Rearward Control	(3) I	(3) —
4	—	—	—	Not Occupied	—	—

M56P Front Seat Recliner Actuator - Passenger

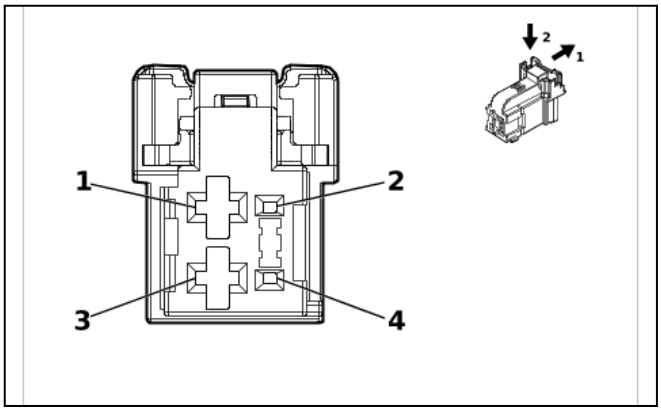

5410027

Connector Part Information

- Harness Type: Front Seat Wiring Harness - Passenger
- OEM Connector: 13522742
- Service Connector: Service by Harness - See Part Catalog
- Description: 4-Way F 0.64, 2.8 Series(BK)

Terminal Part Information

Terminal Type ID	Terminated Lead	Diagnostic Test Probe	Terminal Removal Tool
I	Not required	No Tool Required	No Tool Required

M56P Front Seat Recliner Actuator - Passenger

Pin	Size	Color	Circuit	Function	Terminal Type ID	Option
(1) 1	(1) —	(1) GN	(1) 76	(1) Passenger Seat Recline Motor Forward Control	(1) I	(1) —
2	—	—	—	Not Occupied	—	—
(3) 3	(3) —	(3) BU / BN	(3) 77	(3) Passenger Seat Recline Motor Rearward Control	(3) I	(3) —
4	—	—	—	Not Occupied	—	—

M64 Starter X1 (L84 / L87)

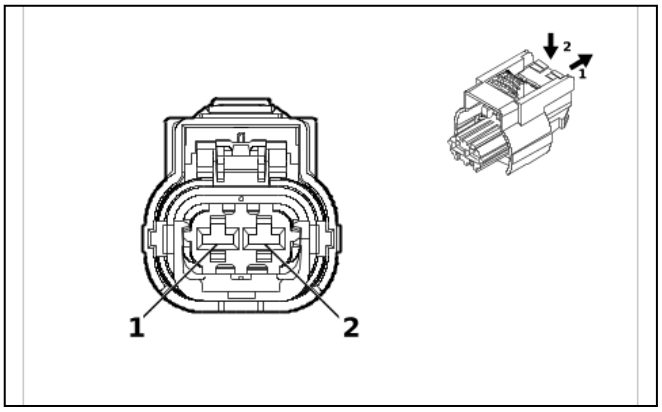

4992524

Connector Part Information
- Harness Type: Engine Wiring Harness
- OEM Connector: 35182447
- Service Connector: 84941154
- Description: 2-Way F 2.8 MCP Series, Sealed(BK)

Terminal Part Information

Terminal Type ID	Terminated Lead	Diagnostic Test Probe	Terminal Removal Tool
I	Not required	J-35616-4A (PU)	No Tool Required

M64 Starter X1 (L84 / L87)

Pin	Size	Color	Circuit	Function	Terminal Type ID	Option
(1) 1	(1) 2.5	(1) YE	(1) 6	(1) Starter Solenoid Crank Ignition Voltage	(1) I	(1) —
(2) 2	(2) 2.5	(2) YE / GN	(2) 4358	(2) Starter Pinion Solenoid Voltage	(2) I	(2) —

M64 Starter X1 (LZ0)

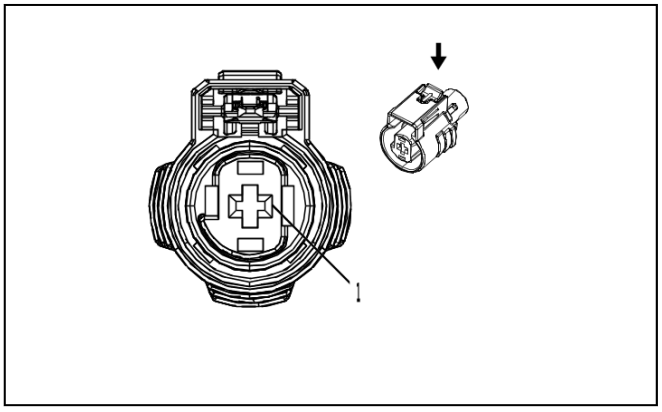

2717134

Connector Part Information
- Harness Type: Engine Wiring Harness
- OEM Connector: 2098198-5
- Service Connector: 19300471
- Description: 1-Way F 2.8 MCP Series, Sealed(BK)

Terminal Part Information

Terminal Type ID	Terminated Lead	Diagnostic Test Probe	Terminal Removal Tool
I	Not required	J-35616-4A (PU)	No Tool Required

M64 Starter X1 (LZ0)

Pin	Size	Color	Circuit	Function	Terminal Type ID	Option
(1) 1	(1) 2.5	(1) YE	(1) 6	(1) Starter Solenoid Crank Ignition Voltage	(1) I	(1) —

M64 Starter X2 (L84 / L87)

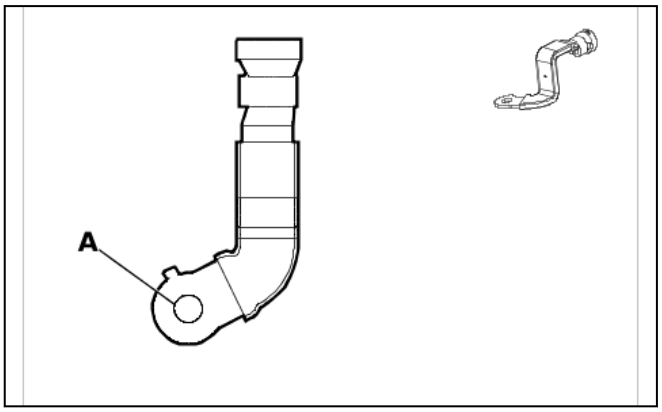

6458097

Connector Part Information

- Harness Type: Starter Solenoid Cable
- OEM Connector: 84406835
- Service Connector: Service by Cable Assembly — See Part Catalog
- Description: 1-Way Ring Terminal

Terminal Part Information

Terminal Type ID	Terminated Lead	Diagnostic Test Probe	Terminal Removal Tool
I	Not required	No Tool Required	No Tool Required

M64 Starter X2 (L84 / L87)

Pin	Size	Color	Circuit	Function	Terminal Type ID	Option
A	35	RD / YE	2	Battery Positive Voltage	I	L84/ L87

M64 Starter X2 (LZ0)

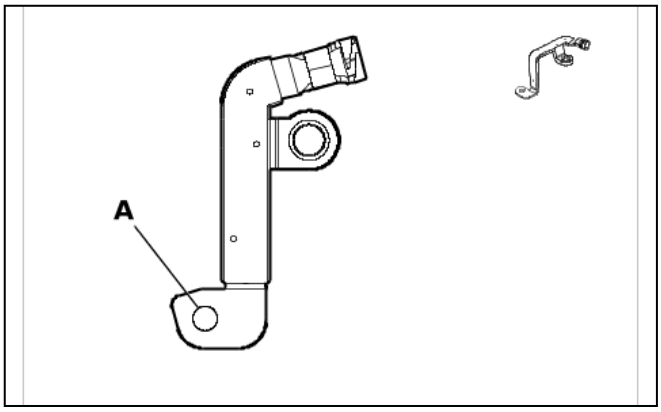

5911297

Connector Part Information
- Harness Type: Starter Solenoid Cable
- OEM Connector: 84892630
- Service Connector: Service by Cable Assembly — See Part Catalog
- Description: 1-Way Ring Terminal

Terminal Part Information

Terminal Type ID	Terminated Lead	Diagnostic Test Probe	Terminal Removal Tool
I	Not required	No Tool Required	No Tool Required

M64 Starter X2 (LZ0)

Pin	Size	Color	Circuit	Function	Terminal Type ID	Option
A	35	RD / YE	2	Battery Positive Voltage	I	LZ0

M65 Steering Column Telescope Actuator (N38)

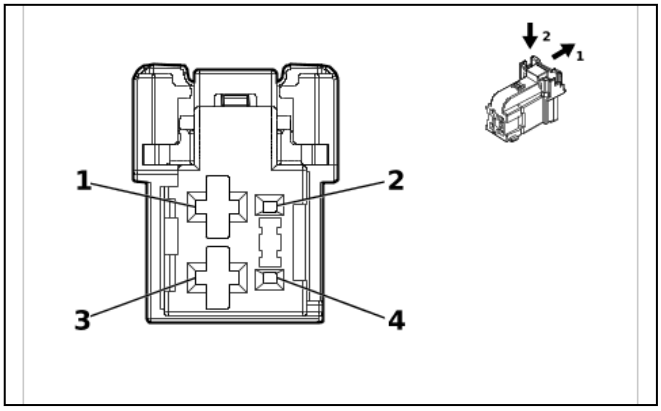

5410027

Connector Part Information
- Harness Type: Steering Column Tilt and Telescope Wheel Actuator Motor Harness
- OEM Connector: 2316171-1
- Service Connector: Service by Harness - See Part Catalog
- Description: 4-Way F 0.64, 2.8 Series(BK)

Terminal Part Information

Terminal Type ID	Terminated Lead	Diagnostic Test Probe	Terminal Removal Tool
I	Not required	No Tool Required	No Tool Required

M65 Steering Column Telescope Actuator (N38)

Pin	Size	Color	Circuit	Function	Terminal Type ID	Option
(1) 1	(1) 1	(1) BK	(1) 2098	(1) Steering Column Telescope Motor Forward Control	(1) I	(1) —
(2) 2	(2) 0.35	(2) YE	(2) 2153	(2) Steering Column Telescope Motor Signal	(2) I	(2) —
(3) 3	(3) 1	(3) RD	(3) 2110	(3) Steering Column Telescope Motor Rearward Control	(3) I	(3) —
(4) 4	(4) 0.35	(4) WH	(4) 2152	(4) Steering Column Telescope Motor Low Reference	(4) I	(4) —

M68 Steering Column Tilt Wheel Actuator (N38)

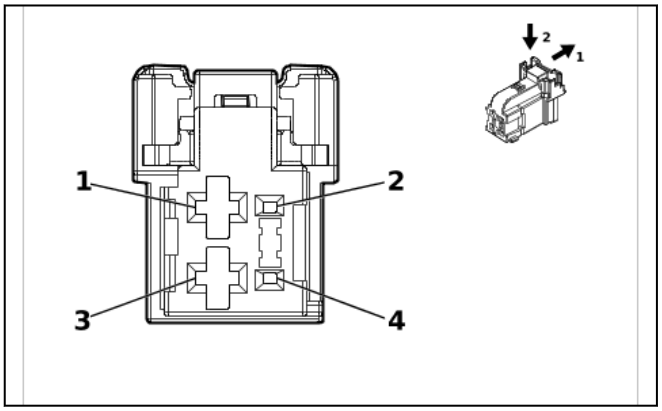

5410027

Connector Part Information

- Harness Type: Steering Column Tilt and Telescope Wheel Actuator Motor Harness
- OEM Connector: 2316171-1
- Service Connector: Service by Harness - See Part Catalog
- Description: 4-Way F 0.64, 2.8 Series(BK)

Terminal Part Information

Terminal Type ID	Terminated Lead	Diagnostic Test Probe	Terminal Removal Tool
I	Not required	No Tool Required	No Tool Required

M68 Steering Column Tilt Wheel Actuator (N38)

Pin	Size	Color	Circuit	Function	Terminal Type ID	Option
(1) 1	(1) 1	(1) OG	(1) 2112	(1) Steering Column Tilt Motor Down Control	(1) I	(1) —
(2) 2	(2) 0.5	(2) BN	(2) 2154	(2) Steering Column Tilt Motor Signal	(2) I	(2) —
(3) 3	(3) 1	(3) VT	(3) 2111	(3) Steering Column Tilt Motor Up Control	(3) I	(3) —
(4) 4	(4) 0.5	(4) BU	(4) 2157	(4) Steering Column Tilt Motor Low Reference	(4) I	(4) —

M73A Front Seat Back Ventilation Blower - Driver (KQV)

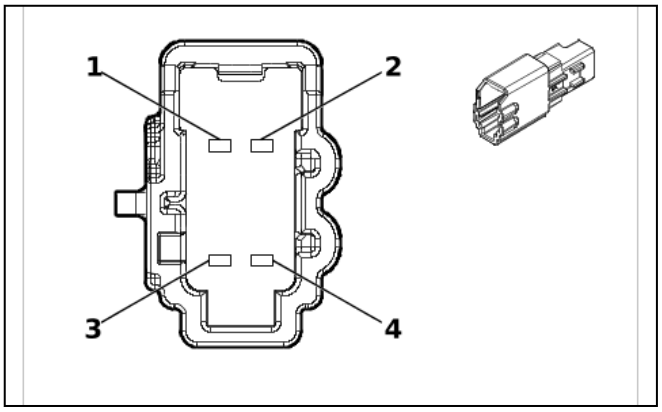

5423974

Connector Part Information

- Harness Type: Front Seat Wiring Harness - Driver
- OEM Connector: 13530133
- Service Connector: Service by Harness - See Part Catalog
- Description: 4-Way M 1.2 MCON Series(GY)

Terminal Part Information

Terminal Type ID	Terminated Lead	Diagnostic Test Probe	Terminal Removal Tool
I	Not required	No Tool Required	No Tool Required

M73A Front Seat Back Ventilation Blower - Driver (KQV)

Pin	Size	Color	Circuit	Function	Terminal Type ID	Option
(1) 1	(1) —	(1) VT / WH	(1) 1139	(1) Run/Crank Ignition 1 Voltage	(1) I	(1) —
(2) 2	(2) —	(2) GN / VT	(2) 5906	(2) Driver Seat Blower Motor Control 1	(2) I	(2) —
(3) 3	(3) —	(3) BK	(3) 1150	(3) Ground	(3) I	(3) —
4	—	—	—	Not Occupied	—	—

M73B Front Seat Back Ventilation Blower - Passenger (KQV)

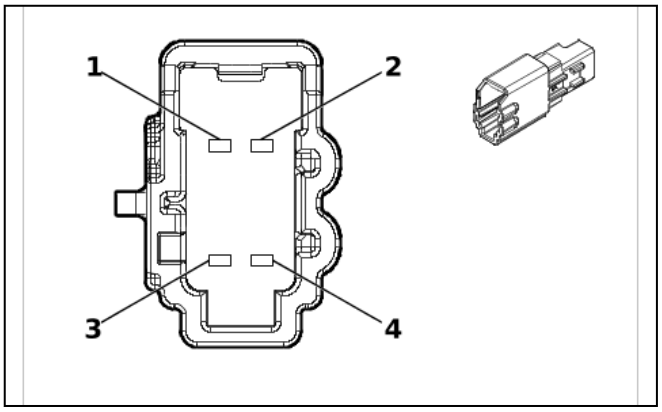

5423974

Connector Part Information

- Harness Type: Front Seat Wiring Harness - Passenger
- OEM Connector: 13530133
- Service Connector: Service by Harness - See Part Catalog
- Description: 4-Way M 1.2 MCON Series(GY)

Terminal Part Information

Terminal Type ID	Terminated Lead	Diagnostic Test Probe	Terminal Removal Tool
I	Not required	No Tool Required	No Tool Required

M73B Front Seat Back Ventilation Blower - Passenger (KQV)

Pin	Size	Color	Circuit	Function	Terminal Type ID	Option
(1) 1	(1) —	(1) VT / WH	(1) 1139	(1) Run/Crank Ignition 1 Voltage	(1) I	(1) —
(2) 2	(2) —	(2) VT / WH	(2) 5908	(2) Passenger Seat Blower Motor Control 1	(2) I	(2) —
(3) 3	(3) —	(3) BK	(3) 1250	(3) Ground	(3) I	(3) —
4	—	—	—	Not Occupied	—	—

M73D Front Seat Cushion Ventilation Blower - Driver (KQV)

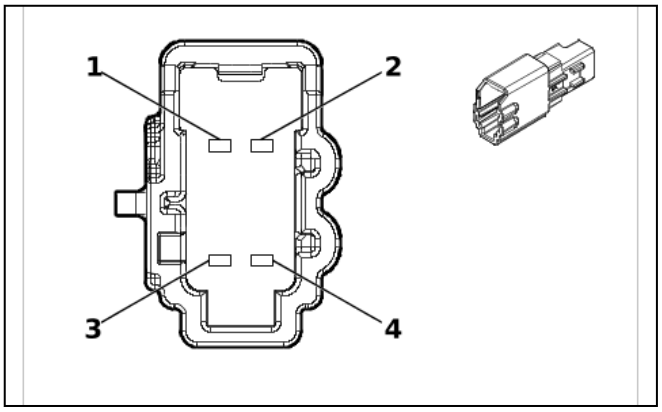

5423974

Connector Part Information

- Harness Type: Front Seat Wiring Harness - Driver
- OEM Connector: 13530133
- Service Connector: Service by Harness - See Part Catalog
- Description: 4-Way M 1.2 MCON Series(GY)

Terminal Part Information

Terminal Type ID	Terminated Lead	Diagnostic Test Probe	Terminal Removal Tool
I	Not required	No Tool Required	No Tool Required

M73D Front Seat Cushion Ventilation Blower - Driver (KQV)

Pin	Size	Color	Circuit	Function	Terminal Type ID	Option
(1) 1	(1) —	(1) VT / WH	(1) 1139	(1) Run/Crank Ignition 1 Voltage	(1) I	(1) —
(2) 2	(2) —	(2) GN / VT	(2) 5906	(2) Driver Seat Blower Motor Control 1	(2) I	(2) —
(3) 3	(3) —	(3) BK	(3) 1150	(3) Ground	(3) I	(3) —
4	—	—	—	Not Occupied	—	—

M73P Front Seat Cushion Ventilation Blower - Passenger (KQV)

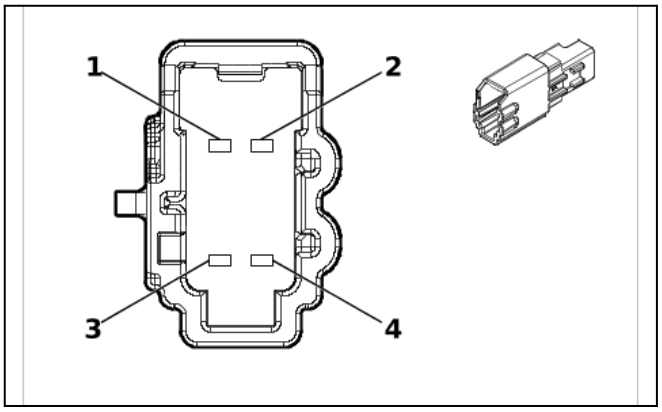

5423974

Connector Part Information

- Harness Type: Front Seat Wiring Harness - Passenger
- OEM Connector: 13530133
- Service Connector: Service by Harness - See Part Catalog
- Description: 4-Way M 1.2 MCON Series(GY)

Terminal Part Information

Terminal Type ID	Terminated Lead	Diagnostic Test Probe	Terminal Removal Tool
I	Not required	No Tool Required	No Tool Required

M73P Front Seat Cushion Ventilation Blower - Passenger (KQV)

Pin	Size	Color	Circuit	Function	Terminal Type ID	Option
(1) 1	(1) —	(1) VT / WH	(1) 1139	(1) Run/Crank Ignition 1 Voltage	(1) I	(1) —
(2) 2	(2) —	(2) VT / WH	(2) 5908	(2) Passenger Seat Blower Motor Control 1	(2) I	(2) —
(3) 3	(3) —	(3) BK	(3) 1250	(3) Ground	(3) I	(3) —
4	—	—	—	Not Occupied	—	—

M74D Front Side Door Window Regulator Motor - Driver

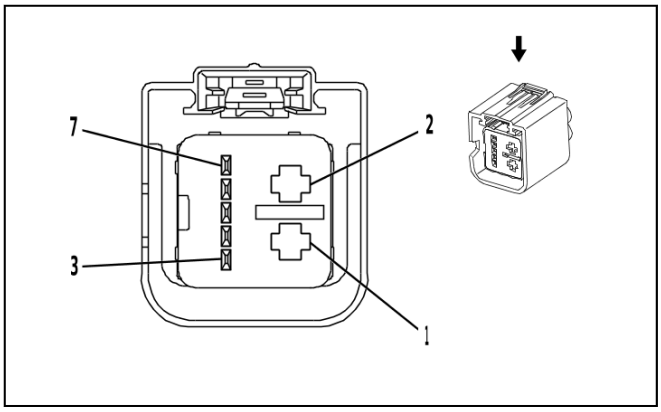

2282932

Connector Part Information

- Harness Type: Front Side Door Door Wiring Harness - Driver
- OEM Connector: 1-1732115-1
- Service Connector: Service by Harness - See Part Catalog
- Description: 7-Way F 0.64, 2.8 Kaizen Timer Series, Sealed(GY)

Terminal Part Information

Terminal Type ID	Terminated Lead	Diagnostic Test Probe	Terminal Removal Tool
I	Not required	J-35616-4A (PU)	No Tool Required
II	Not required	J-35616-64B (L-BU)	No Tool Required

M74D Front Side Door Window Regulator Motor - Driver

Pin	Size	Color	Circuit	Function	Terminal Type ID	Option
(1) 1	(1) 2.5	(1) BK	(1) 1150	(1) Ground	(1) I	(1) —
(2) 2	(2) 2.5	(2) RD / GY	(2) 3540	(2) Battery Positive Voltage	(2) I	(2) —
(3) 3	(3) 0.35	(3) GY / GN	(3) 2763	(3) Window Switch Left Front Up Signal	(3) II	(3) —
(4) 4	(4) 0.35	(4) GN / YE	(4) 6134	(4) Body Control Module LIN Bus 3	(4) II	(4) —
(5) 5	(5) 0.35	(5) GN	(5) 2766	(5) Power Window Switch Left Front Express Signal	(5) II	(5) —
(6) 6	(6) 0.35	(6) GY	(6) 745	(6) Left Front Door Ajar Switch Signal	(6) II	(6) —
(7) 7	(7) 0.35	(7) WH / BN	(7) 2764	(7) Window Switch Left Front Down Signal	(7) II	(7) —

M74LR Rear Side Door Window Regulator Motor - Left

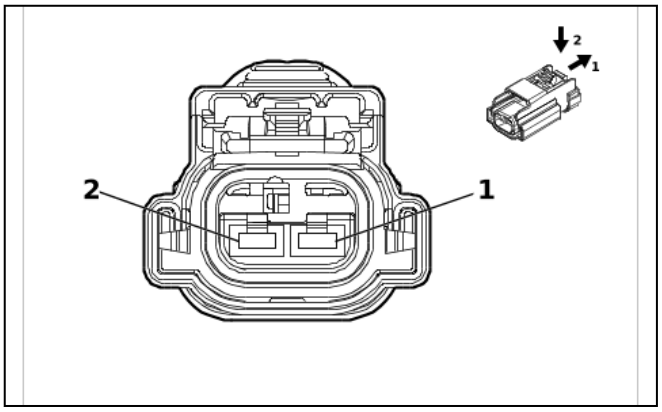

5795169

Connector Part Information
- Harness Type: Rear Side Door Door Wiring Harness - Left
- OEM Connector: 35286783
- Service Connector: Service by Harness - See Part Catalog
- Description: 2-Way F 2.8 APEX Series, Sealed(BK)

Terminal Part Information

Terminal Type ID	Terminated Lead	Diagnostic Test Probe	Terminal Removal Tool
I	Not required	J-35616-35 (VT)	No Tool Required

M74LR Rear Side Door Window Regulator Motor - Left

Pin	Size	Color	Circuit	Function	Terminal Type ID	Option
(1) 1	(1) 2	(1) BU / VT	(1) 668	(1) Left Rear Window Motor Up Control	(1) I	(1) —
(2) 2	(2) 2	(2) YE / BU	(2) 669	(2) Left Rear Window Motor Down Control	(2) I	(2) —

M74P Front Side Door Window Regulator Motor - Passenger

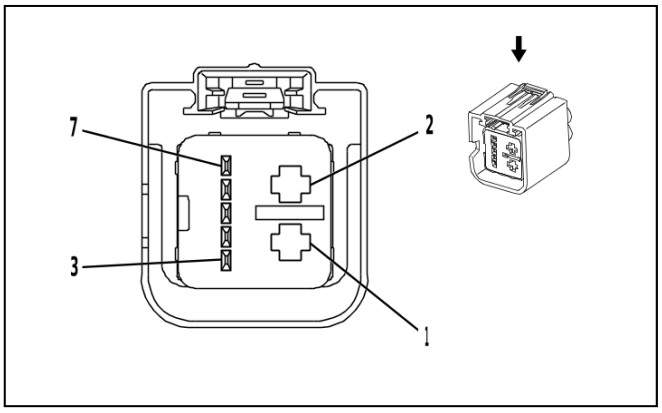

2282932

Connector Part Information
- Harness Type: Front Side Door Door Wiring Harness - Passenger
- OEM Connector: 1-1732115-1
- Service Connector: Service by Harness - See Part Catalog
- Description: 7-Way F 0.64, 2.8 Kaizen Timer Series, Sealed(GY)

Terminal Part Information

Terminal Type ID	Terminated Lead	Diagnostic Test Probe	Terminal Removal Tool
I	Not required	J-35616-4A (PU)	No Tool Required
II	Not required	J-35616-64B (L-BU)	No Tool Required

M74P Front Side Door Window Regulator Motor - Passenger

Pin	Size	Color	Circuit	Function	Terminal Type ID	Option
(1) 1	(1) 2.5	(1) BK	(1) 1250	(1) Ground	(1) I	(1) —
(2) 2	(2) 2.5	(2) RD / BN	(2) 4240	(2) Battery Positive Voltage	(2) I	(2) —
(3) 3	(3) 0.35	(3) GN	(3) 1184	(3) Window Switch Right Front Up Signal	(3) II	(3) —
(4) 4	(4) 0.35	(4) GN / YE	(4) 6134	(4) Body Control Module LIN Bus 3	(4) II	(4) —
(5) 5	(5) 0.35	(5) VT / GY	(5) 2765	(5) Window Switch Right Front Express Signal	(5) II	(5) —
(6) 6	(6) 0.35	(6) GY	(6) 746	(6) Right Front Door Ajar Switch Signal	(6) II	(6) —
(7) 7	(7) 0.35	(7) BN	(7) 5295	(7) Window Switch Right Front Down Signal	(7) II	(7) —

M74RR Rear Side Door Window Regulator Motor - Right

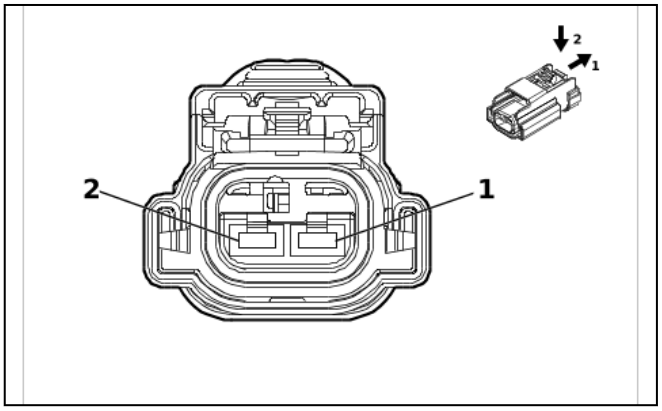

5795169

Connector Part Information

- Harness Type: Rear Side Door Door Wiring Harness - Right
- OEM Connector: 35286783
- Service Connector: Service by Harness - See Part Catalog
- Description: 2-Way F 2.8 APEX Series, Sealed(BK)

Terminal Part Information

Terminal Type ID	Terminated Lead	Diagnostic Test Probe	Terminal Removal Tool
I	Not required	J-35616-35 (VT)	No Tool Required

M74RR Rear Side Door Window Regulator Motor - Right

Pin	Size	Color	Circuit	Function	Terminal Type ID	Option
(1) 1	(1) 2	(1) BU / GY	(1) 670	(1) Right Rear Window Motor Up Control	(1) I	(1) —
(2) 2	(2) 2	(2) GN / BK	(2) 671	(2) Right Rear Window Motor Down Control	(2) I	(2) —

M75 Windshield Wiper Motor

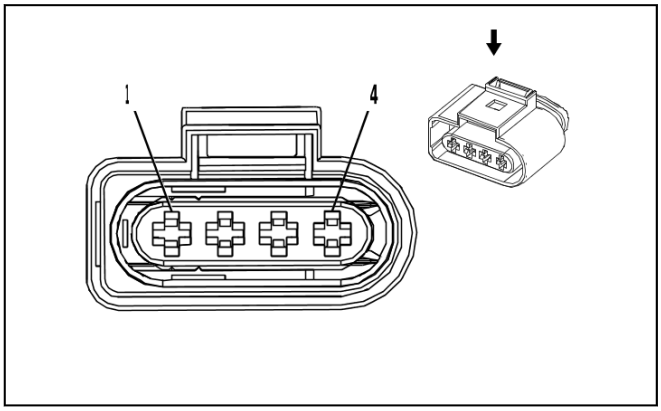

2474722

Connector Part Information

- Harness Type: Body Wiring Harness
- OEM Connector: 638245-2
- Service Connector: 85596545
- Description: 4-Way F Junior Power Timer Series, Sealed(BK)

Terminal Part Information

Terminal Type ID	Terminated Lead	Diagnostic Test Probe	Terminal Removal Tool
I	Not required	J-35616-4A (PU)	No Tool Required

M75 Windshield Wiper Motor

Pin	Size	Color	Circuit	Function	Terminal Type ID	Option
(1) 1	(1) 2	(1) WH	(1) 92	(1) Windshield Wiper Motor High Speed Control	(1) I	(1) —
(2) 2	(2) 2	(2) YE / BN	(2) 95	(2) Windshield Wiper Motor Low Speed Control	(2) I	(2) —
(3) 3	(3) 0.5	(3) BN / GN	(3) 196	(3) Windshield Wiper Motor Park Switch Signal	(3) I	(3) —
(4) 4	(4) 2	(4) BK	(4) 150	(4) Ground	(4) I	(4) —

M81 Sunroof Sunshade Motor (C3U)

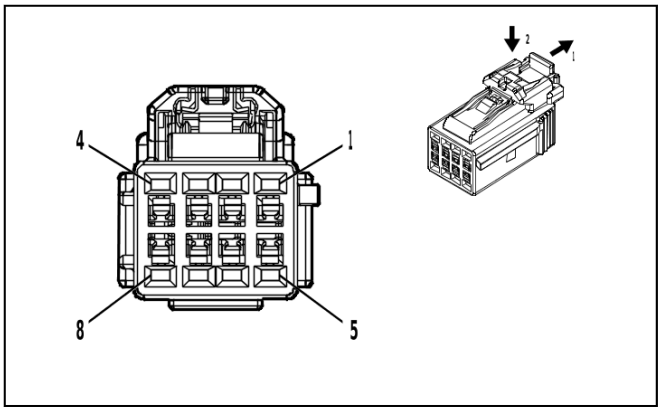

5086387

Connector Part Information

- Harness Type: Sunroof Wiring Harness
- OEM Connector: 6098-8443
- Service Connector: Service by Harness - See Part Catalog
- Description: 8-Way F 1.2 Series(BK)

Terminal Part Information

Terminal Type ID	Terminated Lead	Diagnostic Test Probe	Terminal Removal Tool
I	Not required	J-35616-16 (L-GN)	No Tool Required

M81 Sunroof Sunshade Motor (C3U)

Pin	Size	Color	Circuit	Function	Terminal Type ID	Option
(1) 1	(1) 1.5	(1) PK	(1) 3781	(1) Front Sunroof Sunshade Motor Open Control	(1) I	(1) —
(2) 2	(2) 0.35	(2) VT	(2) 5124	(2) Sunroof Obstruction Sensor Signal 2	(2) I	(2) —
(3) 3	(3) 0.35	(3) RD / WH	(3) 5033	(3) Sunroof Obstruction Sensor Voltage Reference	(3) I	(3) —
4	—	—	—	Not Occupied	—	—
(5) 5	(5) 1.5	(5) BU	(5) 3782	(5) Front Sunshade Motor Close Control	(5) I	(5) —
(6) 6	(6) 0.35	(6) YE	(6) 5034	(6) Sunroof Obstruction Sensor Signal 1	(6) I	(6) —
(7) 7	(7) 0.35	(7) BK / BN	(7) 128	(7) Sunroof Switch Low Reference	(7) I	(7) —
8	—	—	—	Not Occupied	—	—

M96A Active Grille Air Shutter Actuator 1

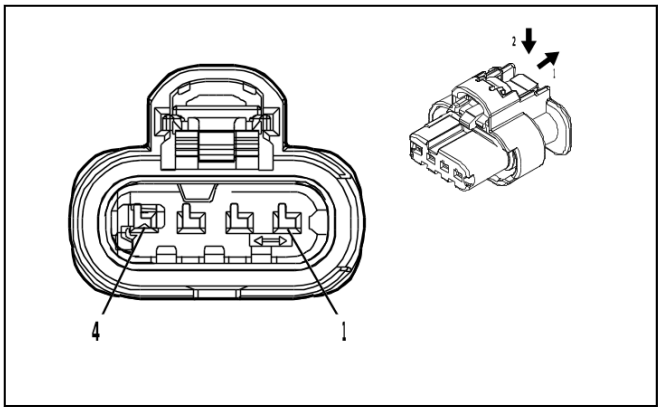

4934614

Connector Part Information

- Harness Type: Air Shutter Jumper
- OEM Connector: Not Available
- Service Connector: Service by Harness - See Part Catalog
- Description: 3-Way

Terminal Part Information

Terminal Type ID	Terminated Lead	Diagnostic Test Probe	Terminal Removal Tool
I	Not required	No Tool Required	No Tool Required

M96A Active Grille Air Shutter Actuator 1

Pin	Size	Color	Circuit	Function	Terminal Type ID	Option
(1) 1	(1) 0.5	(1) VT / BU	(1) 5705	(1) Powertrain Main Relay Control	(1) I	(1) —
(2) 2	(2) 0.75	(2) GN / VT	(2) 4621	(2) Engine Control Module LIN Bus 1	(2) I	(2) —
(3) 3	(3) 0.5	(3) BK	(3) 6550	(3) Ground	(3) I	(3) —
4	—	—	—	Not Occupied	—	—

M96B Active Grille Air Shutter Actuator 2 (WMI)

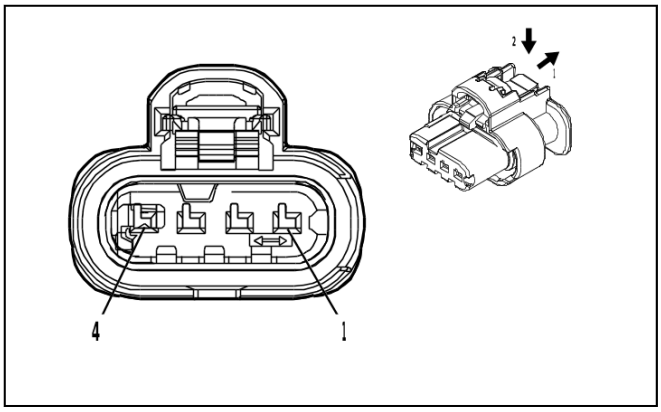

4934614

Connector Part Information

- Harness Type: Air Shutter Jumper
- OEM Connector: Not Available
- Service Connector: Service by Harness - See Part Catalog
- Description: 4-Way

Terminal Part Information

Terminal Type ID	Terminated Lead	Diagnostic Test Probe	Terminal Removal Tool
I	Not required	No Tool Required	No Tool Required

M96B Active Grille Air Shutter Actuator 2 (WMI)

Pin	Size	Color	Circuit	Function	Terminal Type ID	Option
(1) 1	(1) 0.5	(1) VT / BU	(1) 5705	(1) Powertrain Main Relay Control	(1) I	(1) —
(2) 2	(2) 0.75	(2) GN / VT	(2) 4621	(2) Engine Control Module LIN Bus 1	(2) I	(2) —
(3) 3	(3) 0.5	(3) BK	(3) 6550	(3) Ground	(3) I	(3) —
(4) 4	(4) 0.5	(4) BK	(4) 6550	(4) Ground	(4) I	(4) —

M97 Fuel Tank Filler Door Lock Actuator (N08)

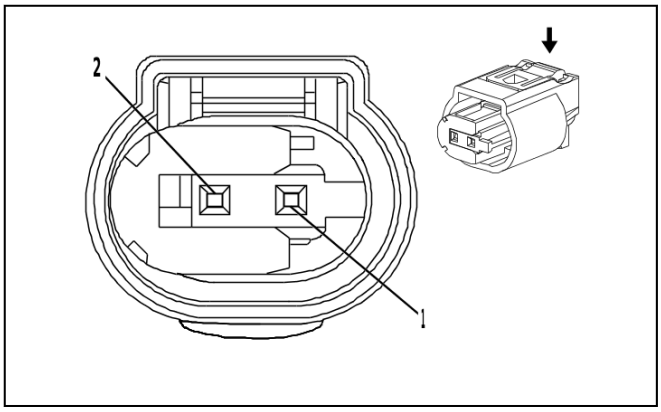

1869767

Connector Part Information
- Harness Type: Fuel Tank Filler Door Lock Release Wiring Harness
- OEM Connector: 13623700
- Service Connector: Service by Harness - See Part Catalog
- Description: 2-Way F 0.64 Micro-Quadlock Series, Sealed(BK)

Terminal Part Information

Terminal Type ID	Terminated Lead	Diagnostic Test Probe	Terminal Removal Tool
I	Not required	J-35616-64B (L-BU)	No Tool Required

M97 Fuel Tank Filler Door Lock Actuator (N08)

Pin	Size	Color	Circuit	Function	Terminal Type ID	Option
(1) 1	(1) 0.5	(1) BU / BK	(1) 2690	(1) Fuel Door Actuator Unlock Control	(1) I	(1) —
(2) 2	(2) 0.5	(2) VT / GY	(2) 2683	(2) Unlatch Actuators Unlatch Low Reference 1	(2) I	(2) —

M103 Turbocharger Vane Position Actuator (LZ0)

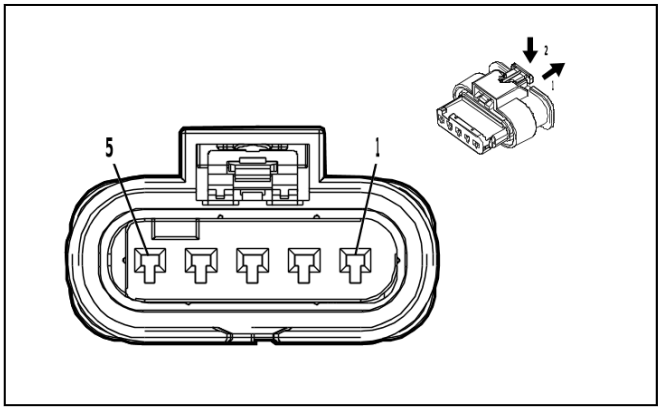

3338689

Connector Part Information
- Harness Type: Engine Wiring Harness
- OEM Connector: 1-1718806-1
- Service Connector: 19119351
- Description: 5-Way F 1.2 MCON-LL Series, Sealed(BK)

Terminal Part Information

Terminal Type ID	Terminated Lead	Diagnostic Test Probe	Terminal Removal Tool
I	Not required	J-35616-12 (BU)	No Tool Required

M103 Turbocharger Vane Position Actuator (LZ0)

Pin	Size	Color	Circuit	Function	Terminal Type ID	Option
(1) 1	(1) 0.75	(1) WH / BN	(1) 1313	(1) Variable Geometry Turbocharger Position Sensor Motor Open Control	(1) I	(1) —
(2) 2	(2) 0.5	(2) VT / YE	(2) 5947	(2) Turbocharger Vane Position Sensor Signal	(2) I	(2) —
(3) 3	(3) 0.5	(3) BK / GN	(3) 580	(3) Engine Control Sensors Low Reference 2	(3) I	(3) —
(4) 4	(4) 0.5	(4) WH / RD	(4) 480	(4) Engine Control Vehicle Sensors 5 Volt Reference 1	(4) I	(4) —
(5) 5	(5) 0.75	(5) GY / BK	(5) 1330	(5) Variable Geometry Turbocharger Position Sensor Motor Close Control	(5) I	(5) —

M104L Parking Brake Actuator - Left

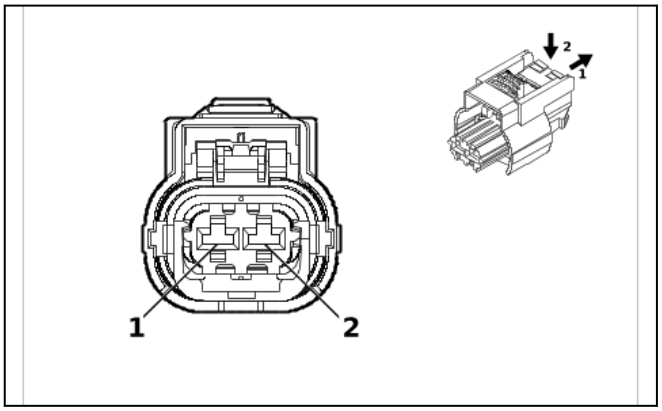

4992524

Connector Part Information

- Harness Type: Chassis Rear Wiring Harness Extension Harness - Left
- OEM Connector: 35182447
- Service Connector: Service by Harness - See Part Catalog
- Description: 2-Way F 2.8 MCP Series, Sealed(BK)

Terminal Part Information

Terminal Type ID	Terminated Lead	Diagnostic Test Probe	Terminal Removal Tool
I	Not required	J-35616-35 (VT)	No Tool Required

M104L Parking Brake Actuator - Left

Pin	Size	Color	Circuit	Function	Terminal Type ID	Option
(1) 1	(1) 2.5	(1) WH	(1) 2001	(1) Left Park Brake Motor Apply Control	(1) I	(1) —
(2) 2	(2) 2.5	(2) GY / BK	(2) 4369	(2) Left Park Brake Motor Low Reference	(2) I	(2) —

M104R Parking Brake Actuator - Right

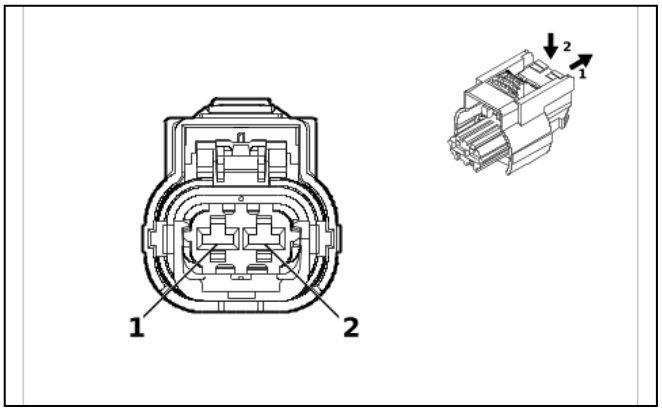

4992524

Connector Part Information
- Harness Type: Chassis Rear Wiring Harness Extension Harness - Right
- OEM Connector: 13532979
- Service Connector: Service by Harness - See Part Catalog
- Description: 2-Way F 2.8 MCP Series, Sealed(BK)

Terminal Part Information

Terminal Type ID	Terminated Lead	Diagnostic Test Probe	Terminal Removal Tool
I	Not required	No Tool Required	No Tool Required

M104R Parking Brake Actuator - Right

Pin	Size	Color	Circuit	Function	Terminal Type ID	Option
(1) 1	(1) —	(1) GY	(1) 4368	(1) Right Park Brake Motor Low Reference	(1) I	(1) —
(2) 2	(2) —	(2) GN / VT	(2) 1988	(2) Right Park Brake Motor Apply Control	(2) I	(2) —

M107LR Folding Rear Seat Back Actuator - Left (ATN / ATT)

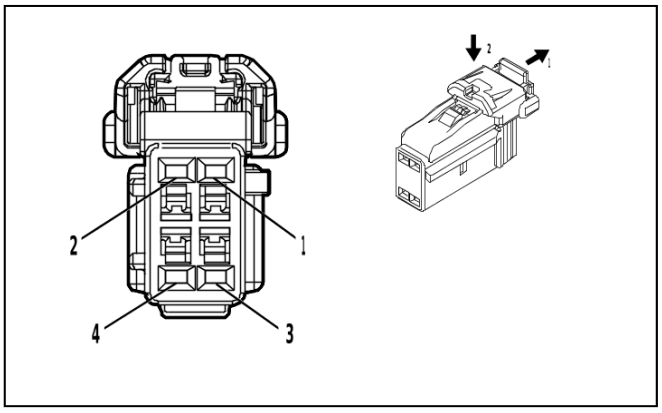

4872683

Connector Part Information
- Harness Type: 2nd Row Seat Wiring Harness - Left Cushion
- OEM Connector: 13533335
- Service Connector: Service by Harness - See Part Catalog
- Description: 4-Way F 1.2 Series(BK)

Terminal Part Information

Terminal Type ID	Terminated Lead	Diagnostic Test Probe	Terminal Removal Tool
I	Not required	No Tool Required	No Tool Required

M107LR Folding Rear Seat Back Actuator - Left (ATN / ATT)

Pin	Size	Color	Circuit	Function	Terminal Type ID	Option
(1) 1	(1) —	(1) RD / GY	(1) 6240	(1) Battery Positive Voltage	(1) I	(1) —
(2) 2	(2) —	(2) BK	(2) 2050	(2) Ground	(2) I	(2) —
(3) 3	(3) —	(3) GN	(3) 6808	(3) Left Rear Folding Seat Motor Control	(3) I	(3) —
4	—	—	—	Not Occupied	—	—

M107RR Folding Rear Seat Back Actuator - Right (ATN / ATT)

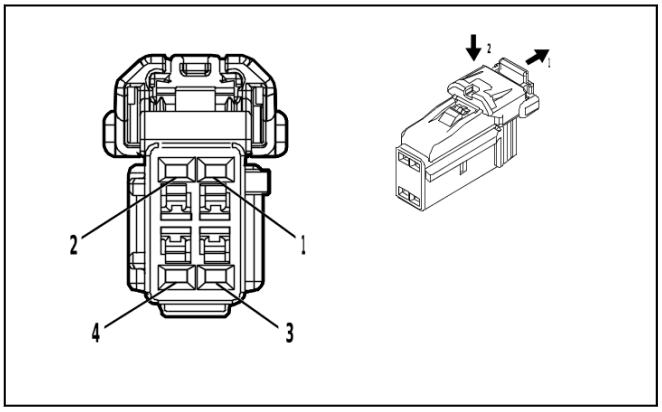

4872683

Connector Part Information

- Harness Type: 2nd Row Seat Wiring Harness - Right Cushion
- OEM Connector: 13533335
- Service Connector: Service by Harness - See Part Catalog
- Description: 4-Way F 1.2 Series(BK)

Terminal Part Information

Terminal Type ID	Terminated Lead	Diagnostic Test Probe	Terminal Removal Tool
I	Not required	No Tool Required	No Tool Required

M107RR Folding Rear Seat Back Actuator - Right (ATN / ATT)

Pin	Size	Color	Circuit	Function	Terminal Type ID	Option
(1) 1	(1) —	(1) RD / GY	(1) 6240	(1) Battery Positive Voltage	(1) I	(1) —
(2) 2	(2) —	(2) BK	(2) 1450	(2) Ground	(2) I	(2) —
(3) 3	(3) —	(3) BN / WH	(3) 6809	(3) Right Rear Folding Seat Motor Control	(3) I	(3) —
4	—	—	—	Not Occupied	—	—

M108LR 3rd Row Seat Back Pivot Actuator Motor - Left (AS8)

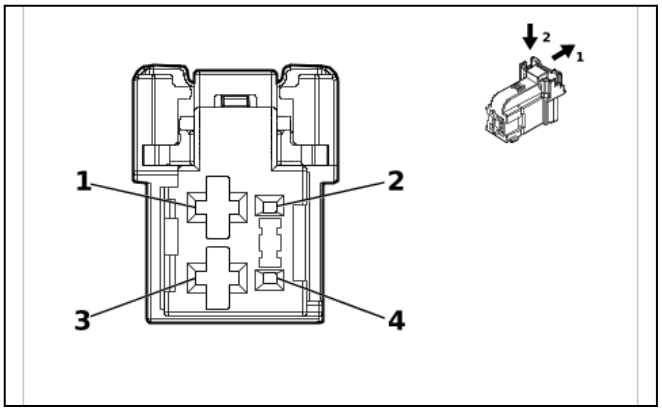

5410027

Connector Part Information

- Harness Type: 3rd Row Seat Wiring Harness
- OEM Connector: 13522742
- Service Connector: Service by Harness - See Part Catalog
- Description: 4-Way F 0.64, 2.8 Series(BK)

Terminal Part Information

Terminal Type ID	Terminated Lead	Diagnostic Test Probe	Terminal Removal Tool
I	Not required	No Tool Required	No Tool Required

M108LR 3rd Row Seat Back Pivot Actuator Motor - Left (AS8)

Pin	Size	Color	Circuit	Function	Terminal Type ID	Option
(1) 1	(1) —	(1) BN	(1) 4222	(1) 3rd Row Left Seat Recline Motor Rearward Control	(1) I	(1) —
(2) 2	(2) —	(2) YE / BN	(2) 4214	(2) 3rd Row Left Seat Recline Position Sensor Signal	(2) I	(2) —
(3) 3	(3) —	(3) VT / BK	(3) 4221	(3) 3rd Row Left Seat Recline Motor Forward Control	(3) I	(3) —
(4) 4	(4) —	(4) BK / BU	(4) 5474	(4) 3rd Row Seat Sensor Low Reference	(4) I	(4) —

M108RR 3rd Row Seat Back Pivot Actuator Motor - Right (AS8)

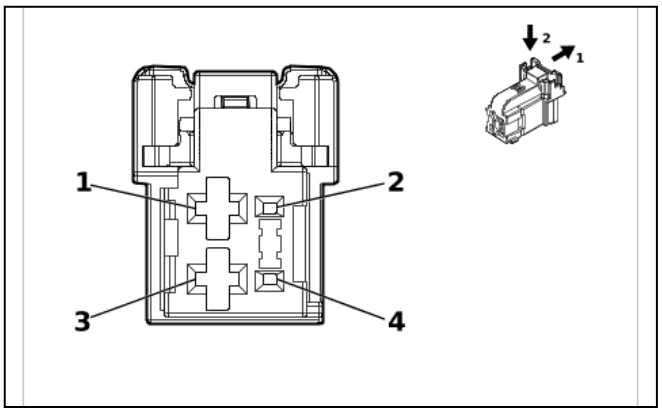

5410027

Connector Part Information

- Harness Type: 3rd Row Seat Wiring Harness
- OEM Connector: 13522742
- Service Connector: Service by Harness - See Part Catalog
- Description: 4-Way F 0.64, 2.8 Series(BK)

Terminal Part Information

Terminal Type ID	Terminated Lead	Diagnostic Test Probe	Terminal Removal Tool
I	Not required	No Tool Required	No Tool Required

M108RR 3rd Row Seat Back Pivot Actuator Motor - Right (AS8)

Pin	Size	Color	Circuit	Function	Terminal Type ID	Option
(1) 1	(1) —	(1) GY / OG	(1) 4218	(1) 3rd Row Right Seat Recline Rearward Control	(1) I	(1) —
(2) 2	(2) —	(2) WH / VT	(2) 4213	(2) 3rd Row Right Seat Recline Position Sensor Signal	(2) I	(2) —
(3) 3	(3) —	(3) BU	(3) 4217	(3) 3rd Row Right Seat Recline Motor Forward Control	(3) I	(3) —
(4) 4	(4) —	(4) BK / BU	(4) 5474	(4) 3rd Row Seat Sensor Low Reference	(4) I	(4) —

M109LR Folding 3rd Row Seat Back Actuator - Left (AS8)

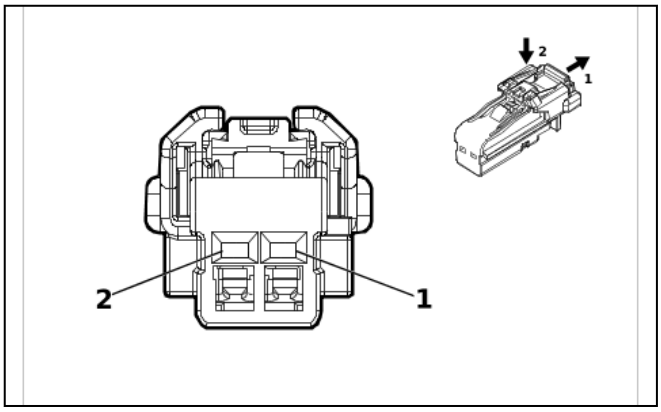

4115691

Connector Part Information
- Harness Type: 3rd Row Seat Wiring Harness
- OEM Connector: 13532422
- Service Connector: Service by Harness - See Part Catalog
- Description: 2-Way F 1.2 MCON Series(BK)

Terminal Part Information

Terminal Type ID	Terminated Lead	Diagnostic Test Probe	Terminal Removal Tool
I	Not required	No Tool Required	No Tool Required

M109LR Folding 3rd Row Seat Back Actuator - Left (AS8)

Pin	Size	Color	Circuit	Function	Terminal Type ID	Option
(1) 1	(1) —	(1) YE / BK	(1) 8923	(1) Left 3rd Row Folding Seat Back Unlatch Motor Control High	(1) I	(1) —
(2) 2	(2) —	(2) GY / WH	(2) 8922	(2) Left 3rd Row Folding Seat Back Unlatch Motor Control Low	(2) I	(2) —

M109RR Folding 3rd Row Seat Back Actuator - Right (AS8)

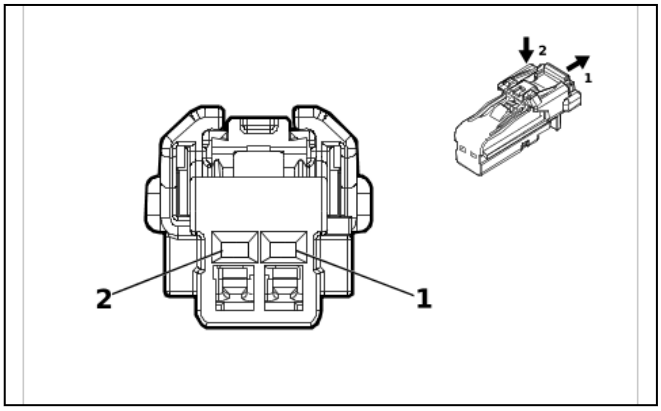

4115691

Connector Part Information
- Harness Type: 3rd Row Seat Wiring Harness
- OEM Connector: 13532422
- Service Connector: Service by Harness - See Part Catalog
- Description: 2-Way F 1.2 MCON Series(BK)

Terminal Part Information

Terminal Type ID	Terminated Lead	Diagnostic Test Probe	Terminal Removal Tool
I	Not required	No Tool Required	No Tool Required

M109RR Folding 3rd Row Seat Back Actuator - Right (AS8)

Pin	Size	Color	Circuit	Function	Terminal Type ID	Option
(1) 1	(1) —	(1) GN / BN	(1) 8921	(1) Right 3rd Row Folding Seat Back Unlatch Motor Control High	(1) I	(1) —
(2) 2	(2) —	(2) BU / VT	(2) 8920	(2) Right 3rd Row Folding Seat Back Unlatch Motor Control Low	(2) I	(2) —

M122 Exhaust Pressure Regulator Valve (LZ0)

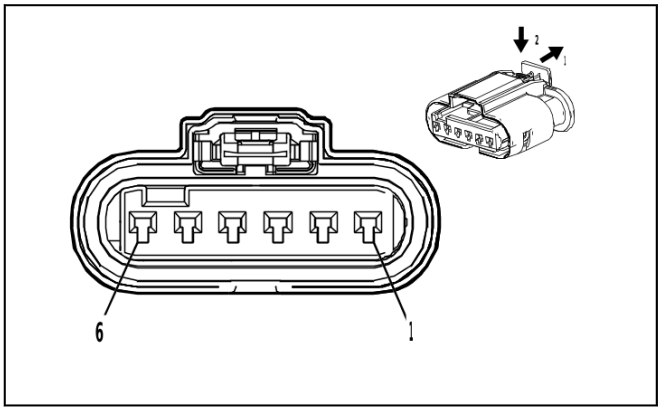

3960142

Connector Part Information

- Harness Type: Chassis Wiring Harness
- OEM Connector: 34900-6119
- Service Connector: 85005020
- Description: 6-Way F 1.2 MCON-LL Series, Sealed(BK)

Terminal Part Information

Terminal Type ID	Terminated Lead	Diagnostic Test Probe	Terminal Removal Tool
I	Not required	J-35616-12 (BU)	No Tool Required

M122 Exhaust Pressure Regulator Valve (LZ0)

Pin	Size	Color	Circuit	Function	Terminal Type ID	Option
(1) 1	(1) 0.75	(1) YE / BN	(1) 1420	(1) Exhaust Restrictor Motor Open Control	(1) I	(1) —
(2) 2	(2) 0.75	(2) BN	(2) 1421	(2) Exhaust Restrictor Motor Closed Control	(2) I	(2) —
(3) 3	(3) 0.5	(3) BK / YE	(3) 548	(3) Engine Control Sensors Low Reference 1	(3) I	(3) —
(4) 4	(4) 0.5	(4) BN / GN	(4) 4305	(4) Exhaust Flow Control Valve 1	(4) I	(4) —
(5) 5	(5) 0.5	(5) BU / RD	(5) 460	(5) Engine Control Sensors 5 Volt Reference 1	(5) I	(5) —
6	—	—	—	Not Occupied	—	—

M123 Transmission Park Valve Lock Solenoid Actuator

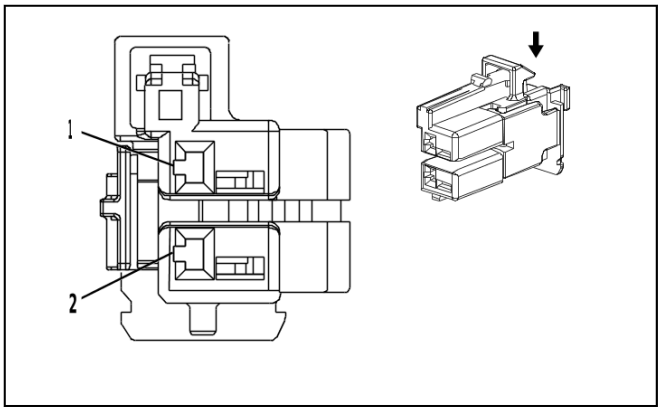

4364736

Connector Part Information
- Harness Type: Automatic Transmission Wiring Harness
- OEM Connector: 2289523-2
- Service Connector: Service by Harness - See Part Catalog
- Description: 2-Way F 1.2 MCON Series(BU)

Terminal Part Information

Terminal Type ID	Terminated Lead	Diagnostic Test Probe	Terminal Removal Tool
I	Not required	J-35616-12 (BU)	No Tool Required

M123 Transmission Park Valve Lock Solenoid Actuator

Pin	Size	Color	Circuit	Function	Terminal Type ID	Option
(1) 1	(1) 0.5	(1) BN	(1) 6387	(1) Transmission High Side Driver 1 Control	(1) I	(1) —
(2) 2	(2) 0.5	(2) OG	(2) 2159	(2) Park Inhibit Solenoid Assembly Control	(2) I	(2) —

M135 Differential Lock Motor (G96)

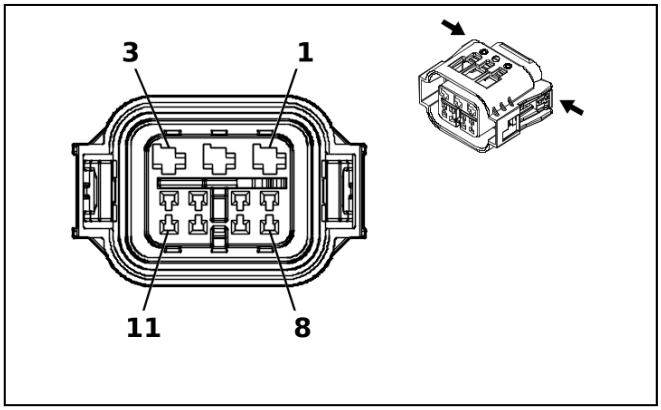

5202126

Connector Part Information
- Harness Type: Differential Carrier Lock Wiring Harness
- OEM Connector: 10090636
- Service Connector: Service by Harness - See Part Catalog
- Description: 11-Way F 1.2 Multilock, 2.8 SLK Series, Sealed(BK)

Terminal Part Information

Terminal Type ID	Terminated Lead	Diagnostic Test Probe	Terminal Removal Tool
I	Not required	J-35616-12 (BU)	No Tool Required
II	Not required	J-35616-4A (PU)	No Tool Required

M135 Differential Lock Motor (G96)

Pin	Size	Color	Circuit	Function	Terminal Type ID	Option
1	—	—	—	Not Occupied	—	—
(2) 2	(2) 2.5	(2) YE / WH	(2) 7969	(2) Axle Differential Lock Control Low	(2) II	(2) —
(3) 3	(3) 2.5	(3) GY / BN	(3) 7968	(3) Axle Differential Lock Control High	(3) II	(3) —
(4) 4	(4) 0.5	(4) WH / RD	(4) 7973	(4) Axle Differential Lock Motor Position Sensor High Reference	(4) I	(4) —
(5) 5	(5) 0.5	(5) BU / WH	(5) 7978	(5) Axle Differential Lock Motor Temperature Sensor Signal	(5) I	(5) —
(6) 6	(6) 0.5	(6) GN / BN	(6) 7975	(6) Axle Differential Lock Motor Position Sensor Signal 1	(6) I	(6) —
(7) 7	(7) 0.5	(7) WH	(7) 7971	(7) Axle Differential Lock Motor Brake Control High	(7) I	(7) —
(8) 8	(8) 0.5	(8) BK / YE	(8) 7977	(8) Axle Differential Lock Motor Temperature Sensor Low Reference	(8) I	(8) —
(9) 9	(9) 0.5	(9) BK / VT	(9) 7974	(9) Axle Differential Lock Motor Position Sensor Low Reference	(9) I	(9) —
(10) 10	(10) 0.5	(10) GY	(10) 7976	(10) Axle Differential Lock Motor Position Sensor Signal 2	(10) I	(10) —
(11) 11	(11) 0.5	(11) VT / BK	(11) 7972	(11) Axle Differential Lock Motor Brake Control Low	(11) I	(11) —

P13 Horn

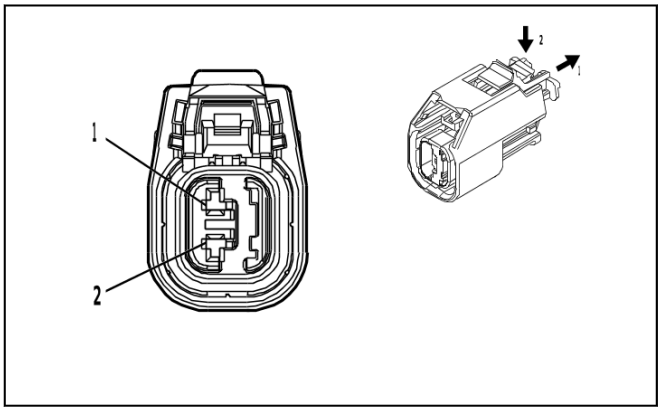

4889830

Connector Part Information

- Harness Type: Body Wiring Harness
- OEM Connector: 33164011
- Service Connector: 86802964
- Description: 2-Way F 1.5 OCS Series, Sealed(BK)

Terminal Part Information

Terminal Type ID	Terminated Lead	Diagnostic Test Probe	Terminal Removal Tool
I	Not required	J-35616-2A (GY)	No Tool Required

P13 Horn

Pin	Size	Color	Circuit	Function	Terminal Type ID	Option
(1) 1	(1) 0.75	(1) BK	(1) 250	(1) Ground	(1) I	(1) —
(2) 2	(2) 0.75	(2) BN / GY	(2) 29	(2) Horn Control	(2) I	(2) —

P16 Instrument Panel Cluster Control Module X1

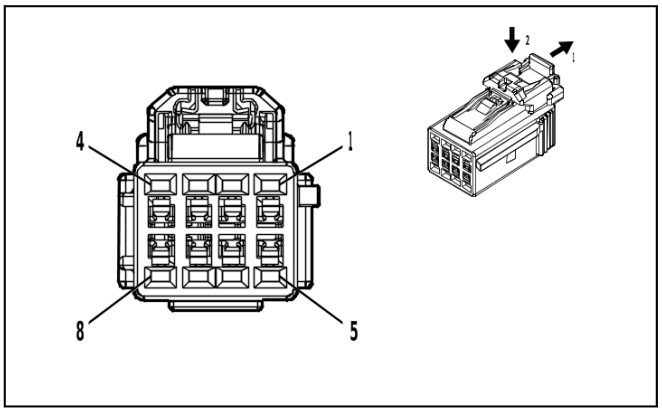

5086387

Connector Part Information

- Harness Type: Instrument Panel Wiring Harness
- OEM Connector: 6098-8443
- Service Connector: 84613126
- Description: 8-Way F 1.2 Series(BK)

Terminal Part Information

Terminal Type ID	Terminated Lead	Diagnostic Test Probe	Terminal Removal Tool
I	Not required	J-35616-16 (L-GN)	No Tool Required

P16 Instrument Panel Cluster Control Module X1

Pin	Size	Color	Circuit	Function	Terminal Type ID	Option
(1) 1	(1) 0.5	(1) RD / WH	(1) 1340	(1) Battery Positive Voltage	(1) I	(1) —
2 - 7	—	—	—	Not Occupied	—	—
(8) 8	(8) 0.5	(8) BK / WH	(8) 1451	(8) Signal Ground	(8) I	(8) —

P16 Instrument Panel Cluster Control Module X2

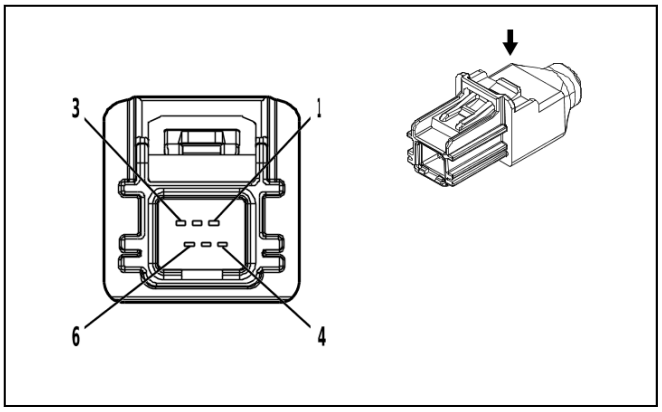

4806625

Connector Part Information
- Harness Type: Instrument Panel Wiring Harness
- OEM Connector: 100337-1023
- Service Connector: Service by Cable Assembly — See Part Catalog
- Description: 6-Way M HSAL-2 Series(BK)

Terminal Part Information

Terminal Type ID	Terminated Lead	Diagnostic Test Probe	Terminal Removal Tool
I	Not required	No Tool Required	No Tool Required

P16 Instrument Panel Cluster Control Module X2

Pin	Size	Color	Circuit	Function	Terminal Type ID	Option
—	—	LVDS	—	(Infotainment) Infotainment Display Signal	I	—

P18 Door Lock Status Indicator (UTJ)

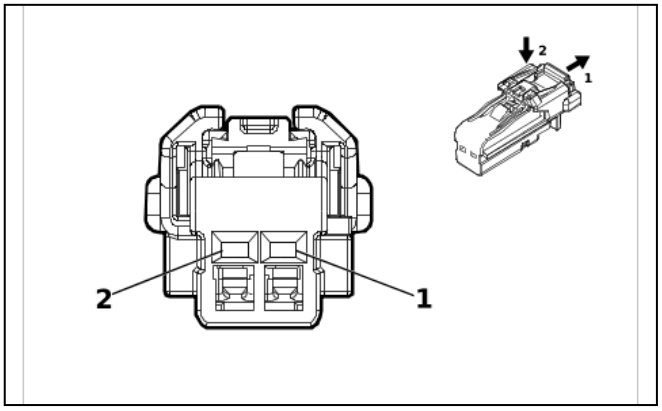

4115691

Connector Part Information
- Harness Type: Front Side Door Door Lock Door Wiring Harness - Driver
- OEM Connector: 6098-8988
- Service Connector: Service by Harness - See Part Catalog
- Description: 2-Way F 1.2 MCON Series(BK)

Terminal Part Information

Terminal Type ID	Terminated Lead	Diagnostic Test Probe	Terminal Removal Tool
I	Not required	J-35616-16 (L-GN)	No Tool Required

P18 Door Lock Status Indicator (UTJ)

Pin	Size	Color	Circuit	Function	Terminal Type ID	Option
(1) 1	(1) 0.35	(1) GY	(1) 728	(1) Security Indicator Control	(1) I	(1) —
(2) 2	(2) 0.35	(2) BK	(2) 1150	(2) Ground	(2) I	(2) —

P19AFC Front Floor Speaker - Console (UQS)

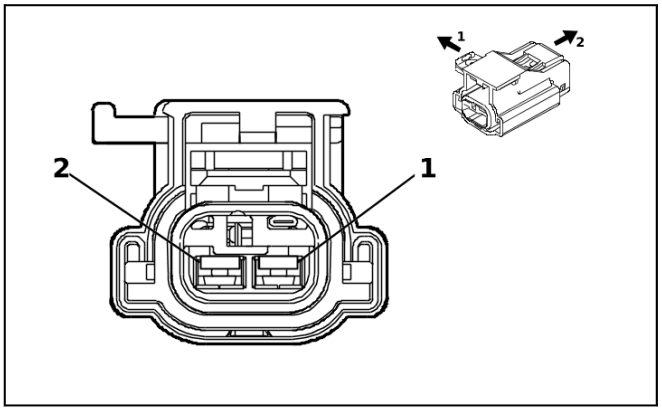

5219859

Connector Part Information

- Harness Type: Body Wiring Harness
- OEM Connector: 33512070
- Service Connector: 84867145
- Description: 2-Way F 2.8 APEX Series(BK)

Terminal Part Information

Terminal Type ID	Terminated Lead	Diagnostic Test Probe	Terminal Removal Tool
I	Not required	J-35616-35 (VT)	No Tool Required

P19AFC Front Floor Speaker - Console (UQS)

Pin	Size	Color	Circuit	Function	Terminal Type ID	Option
(1) 1	(1) 2.5	(1) GN / BK	(1) 1794	(1) Left/Rear Subwoofer [-] Control	(1) I	(1) —
(2) 2	(2) 2.5	(2) BU / GY	(2) 346	(2) Left/Rear Subwoofer [+] Control	(2) I	(2) —

P19AG Radio Front Side Door Speaker - Left

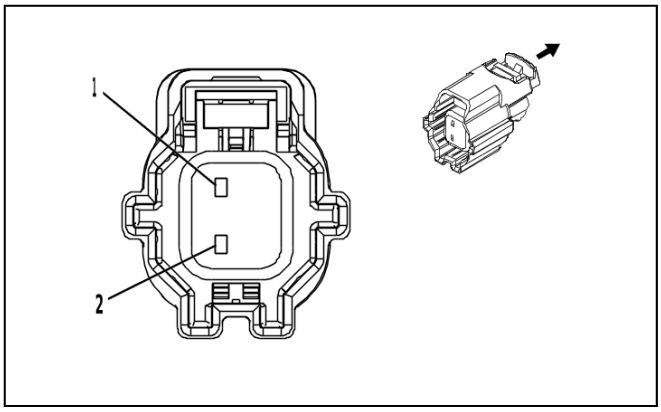

4223204

Connector Part Information
- Harness Type: Front Side Door Door Wiring Harness - Driver
- OEM Connector: 34062-0044
- Service Connector: Service by Harness - See Part Catalog
- Description: 2-Way F 1.5 MX Series, Sealed(BK)

Terminal Part Information

Terminal Type ID	Terminated Lead	Diagnostic Test Probe	Terminal Removal Tool
I	Not required	J-35616-2A (GY)	No Tool Required

P19AG Radio Front Side Door Speaker - Left

Pin	Size	Color	Circuit	Function	Terminal Type ID	Option
(1) 1	(1) 0.75	(1) BN / BU	(1) 118	(1) Left Front Speaker [-] Control 1	(1) I	(1) —
(2) 2	(2) 0.75	(2) BU	(2) 201	(2) Left Front Speaker 1 [+] Control	(2) I	(2) —

P19AH Radio Front Side Door Speaker - Right

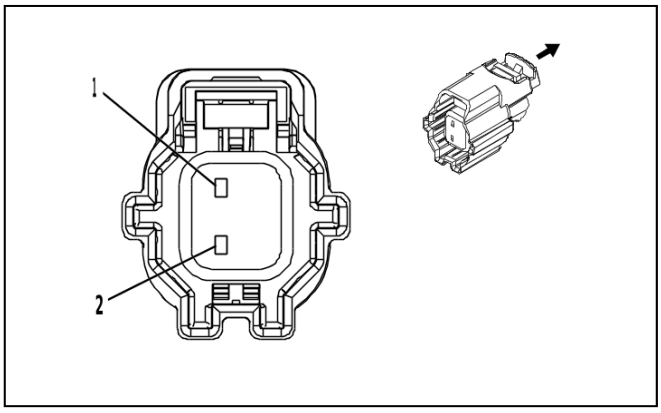

4223204

Connector Part Information
- Harness Type: Front Side Door Door Wiring Harness - Passenger
- OEM Connector: 34062-0044
- Service Connector: Service by Harness - See Part Catalog
- Description: 2-Way F 1.5 MX Series, Sealed(BK)

Terminal Part Information

Terminal Type ID	Terminated Lead	Diagnostic Test Probe	Terminal Removal Tool
I	Not required	J-35616-2A (GY)	No Tool Required

P19AH Radio Front Side Door Speaker - Right

Pin	Size	Color	Circuit	Function	Terminal Type ID	Option
(1) 1	(1) 0.75	(1) YE / BK	(1) 117	(1) Right Front Speaker [-] Control 1	(1) I	(1) —
(2) 2	(2) 0.75	(2) YE	(2) 200	(2) Right Front Speaker 1 [+] Control	(2) I	(2) —

P19AL Radio Rear Side Door Speaker - Left

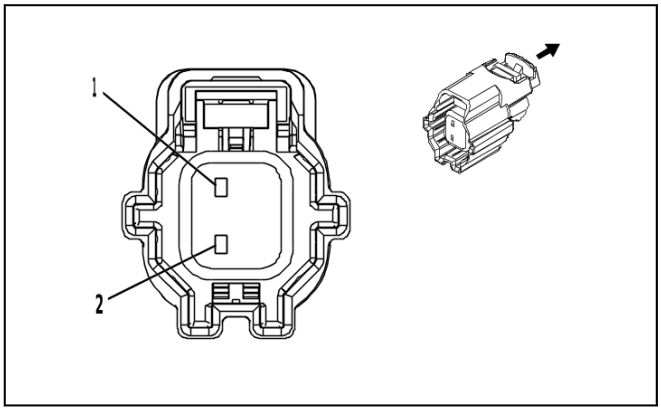

4223204

Connector Part Information

- Harness Type: Rear Side Door Door Wiring Harness - Left
- OEM Connector: 34062-0044
- Service Connector: Service by Harness - See Part Catalog
- Description: 2-Way F 1.5 MX Series, Sealed(BK)

Terminal Part Information

Terminal Type ID	Terminated Lead	Diagnostic Test Probe	Terminal Removal Tool
I	Not required	J-35616-2A (GY)	No Tool Required

P19AL Radio Rear Side Door Speaker - Left

Pin	Size	Color	Circuit	Function	Terminal Type ID	Option
(1) 1	(1) 0.75	(1) GN / BK	(1) 116	(1) Left Rear Speaker [-] Control	(1) I	(1) —
(2) 2	(2) 0.75	(2) GN	(2) 199	(2) Left Rear Speaker [+] Control	(2) I	(2) —

P19AM Radio Rear Side Door Speaker - Right

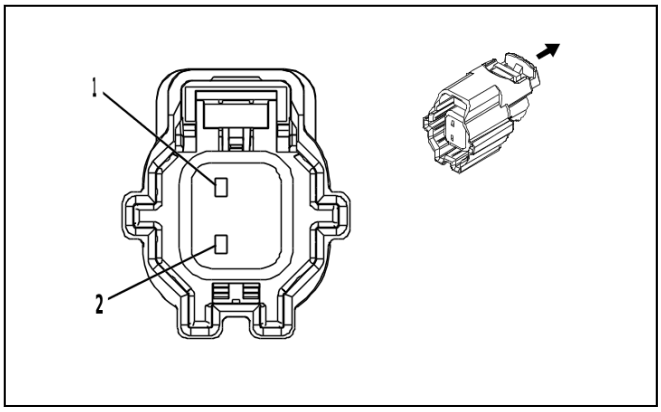

4223204

Connector Part Information
- Harness Type: Rear Side Door Door Wiring Harness - Right
- OEM Connector: 34062-0044
- Service Connector: Service by Harness - See Part Catalog
- Description: 2-Way F 1.5 MX Series, Sealed(BK)

Terminal Part Information

Terminal Type ID	Terminated Lead	Diagnostic Test Probe	Terminal Removal Tool
I	Not required	J-35616-2A (GY)	No Tool Required

P19AM Radio Rear Side Door Speaker - Right

Pin	Size	Color	Circuit	Function	Terminal Type ID	Option
(1) 1	(1) 0.75	(1) BU / BK	(1) 115	(1) Right Rear Speaker [-] Control	(1) I	(1) —
(2) 2	(2) 0.75	(2) WH	(2) 46	(2) Right Rear Speaker [+] Control	(2) I	(2) —

P19B Radio Front Center Speaker (UQS)

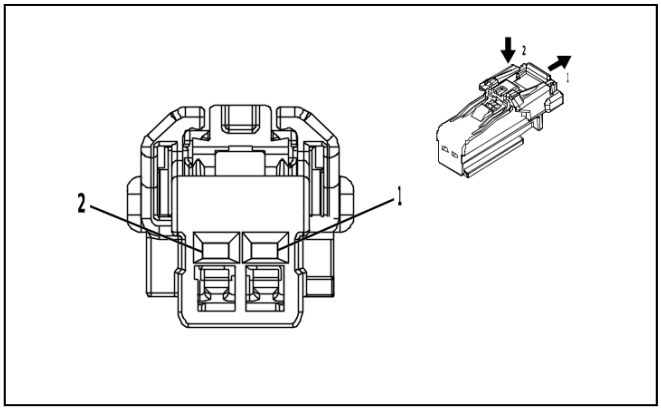

4373379

Connector Part Information
- Harness Type: Instrument Panel Wiring Harness
- OEM Connector: 6098-8989
- Service Connector: 19369632
- Description: 2-Way F 1.2 MCON Series(GY)

Terminal Part Information

Terminal Type ID	Terminated Lead	Diagnostic Test Probe	Terminal Removal Tool
I	Not required	J-35616-16 (L-GN)	No Tool Required

P19B Radio Front Center Speaker (UQS)

Pin	Size	Color	Circuit	Function	Terminal Type ID	Option
(1) 1	(1) 0.75	(1) BU / YE	(1) 1960	(1) Front Center Speaker [-] Control	(1) I	(1) —
(2) 2	(2) 0.75	(2) YE / WH	(2) 1860	(2) Front Center Speaker [+] Control	(2) I	(2) —

P19H Radio Windshield Side Garnish Molding Speaker - Left Front (UQS)

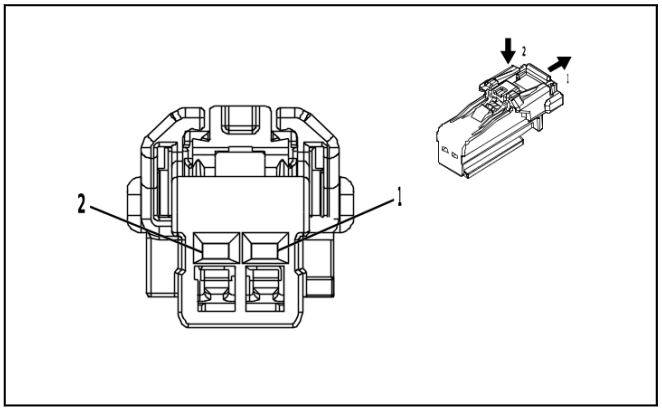

4373379

Connector Part Information

- Harness Type: Instrument Panel Wiring Harness
- OEM Connector: 6098-8989
- Service Connector: 19369632
- Description: 2-Way F 1.2 MCON Series(GY)

Terminal Part Information

Terminal Type ID	Terminated Lead	Diagnostic Test Probe	Terminal Removal Tool
I	Not required	J-35616-16 (L-GN)	No Tool Required

P19H Radio Windshield Side Garnish Molding Speaker - Left Front (UQS)

Pin	Size	Color	Circuit	Function	Terminal Type ID	Option
(1) 1	(1) 0.75	(1) BU / BN	(1) 1957	(1) Left Front Midrange Speaker [-] Control	(1) I	(1) —
(2) 2	(2) 0.75	(2) BU / VT	(2) 1857	(2) Left Front Midrange Speaker [+] Control	(2) I	(2) —

P19J Radio Front Speaker - Instrument Panel Left (UQF)

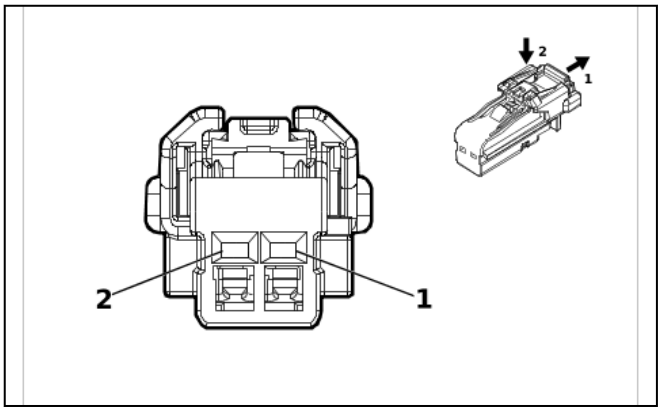

4115691

Connector Part Information
- Harness Type: Instrument Panel Wiring Harness
- OEM Connector: 6098-8988
- Service Connector: 87816612
- Description: 2-Way F 1.2 MCON Series(BK)

Terminal Part Information

Terminal Type ID	Terminated Lead	Diagnostic Test Probe	Terminal Removal Tool
I	Not required	J-35616-16 (L-GN)	No Tool Required

P19J Radio Front Speaker - Instrument Panel Left (UQF)

Pin	Size	Color	Circuit	Function	Terminal Type ID	Option
(1) 1	(1) 0.5	(1) BN / BU	(1) 118	(1) Left Front Speaker [-] Control 1	(1) I	(1) —
(2) 2	(2) 0.5	(2) BU	(2) 201	(2) Left Front Speaker 1 [+] Control	(2) I	(2) —

P19M Radio Body Rear Corner Upper Garnish Molding Speaker - Left (UQS)

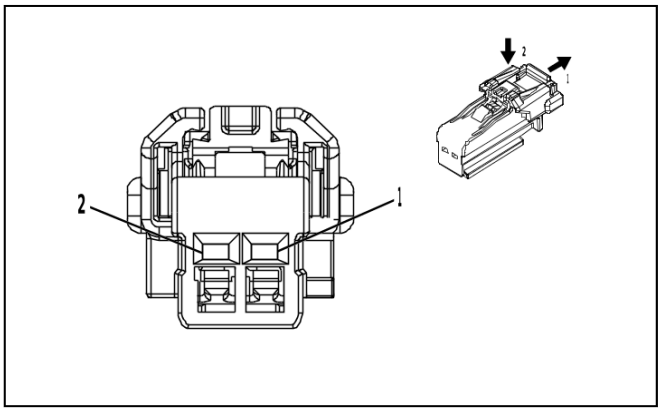

4373379

Connector Part Information
- Harness Type: Body Wiring Harness
- OEM Connector: 6098-8989
- Service Connector: 19369632
- Description: 2-Way F 1.2 MCON Series(GY)

Terminal Part Information

Terminal Type ID	Terminated Lead	Diagnostic Test Probe	Terminal Removal Tool
I	Not required	J-35616-16 (L-GN)	No Tool Required

P19M Radio Body Rear Corner Upper Garnish Molding Speaker - Left (UQS)

Pin	Size	Color	Circuit	Function	Terminal Type ID	Option
(1) 1	(1) 0.75	(1) BN / WH	(1) 8575	(1) Left Rear D-Pillar Speaker [-] Control	(1) I	(1) —
(2) 2	(2) 0.75	(2) WH / GN	(2) 8576	(2) Left Rear D-Pillar Speaker [+] Control	(2) I	(2) —

P19V Radio Windshield Side Garnish Molding Speaker - Right Front (UQS)

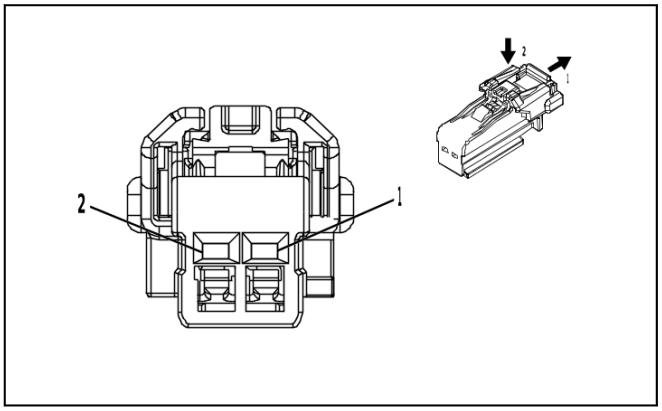

4373379

Connector Part Information

- Harness Type: Instrument Panel Wiring Harness
- OEM Connector: 6098-8989
- Service Connector: 19369632
- Description: 2-Way F 1.2 MCON Series(GY)

Terminal Part Information

Terminal Type ID	Terminated Lead	Diagnostic Test Probe	Terminal Removal Tool
I	Not required	J-35616-16 (L-GN)	No Tool Required

P19V Radio Windshield Side Garnish Molding Speaker - Right Front (UQS)

Pin	Size	Color	Circuit	Function	Terminal Type ID	Option
(1) 1	(1) 0.75	(1) BN / BK	(1) 1953	(1) Right Front Midrange Speaker [-] Control	(1) I	(1) —
(2) 2	(2) 0.75	(2) WH / YE	(2) 1853	(2) Right Front Midrange Speaker [+] Control	(2) I	(2) —

P19W Radio Front Speaker - Instrument Panel Right (UQF)

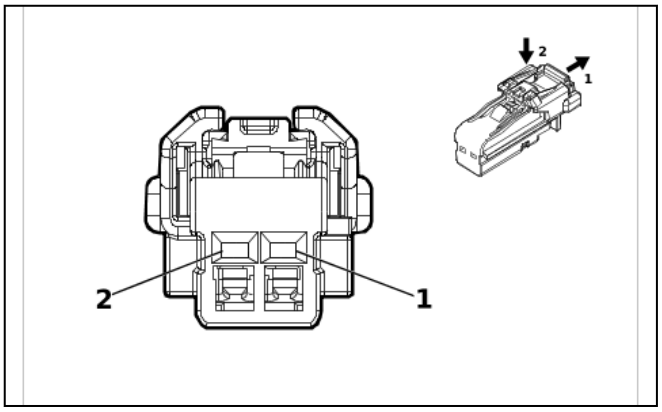

4115691

Connector Part Information
- Harness Type: Instrument Panel Wiring Harness
- OEM Connector: 6098-8988
- Service Connector: 87816612
- Description: 2-Way F 1.2 MCON Series(BK)

Terminal Part Information

Terminal Type ID	Terminated Lead	Diagnostic Test Probe	Terminal Removal Tool
I	Not required	J-35616-16 (L-GN)	No Tool Required

P19W Radio Front Speaker - Instrument Panel Right (UQF)

Pin	Size	Color	Circuit	Function	Terminal Type ID	Option
(1) 1	(1) 0.5	(1) YE / BK	(1) 117	(1) Right Front Speaker [-] Control 1	(1) I	(1) —
(2) 2	(2) 0.5	(2) YE	(2) 200	(2) Right Front Speaker 1 [+] Control	(2) I	(2) —

P19Z Radio Body Rear Corner Upper Garnish Molding Speaker - Right (UQS)

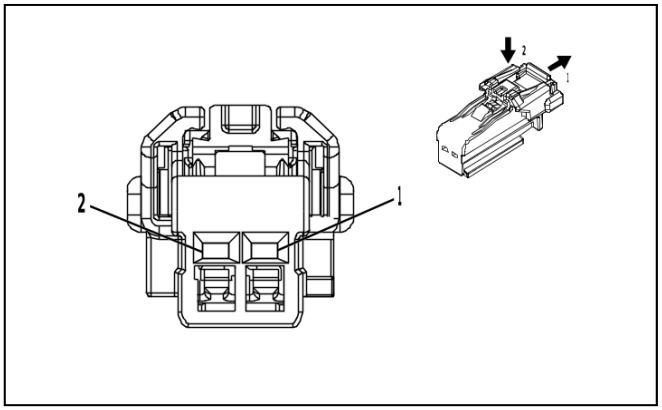

4373379

Connector Part Information
- Harness Type: Body Wiring Harness
- OEM Connector: 6098-8989
- Service Connector: 19369632
- Description: 2-Way F 1.2 MCON Series(GY)

Terminal Part Information

Terminal Type ID	Terminated Lead	Diagnostic Test Probe	Terminal Removal Tool
I	Not required	J-35616-16 (L-GN)	No Tool Required

P19Z Radio Body Rear Corner Upper Garnish Molding Speaker - Right (UQS)

Pin	Size	Color	Circuit	Function	Terminal Type ID	Option
(1) 1	(1) 0.75	(1) GY / WH	(1) 8577	(1) Right Rear D-Pillar Speaker [-] Control	(1) I	(1) —
(2) 2	(2) 0.75	(2) VT	(2) 8578	(2) Right Rear D-Pillar Speaker [+] Control	(2) I	(2) —

P22E Video Display - Left Front Seat Back (UW9)

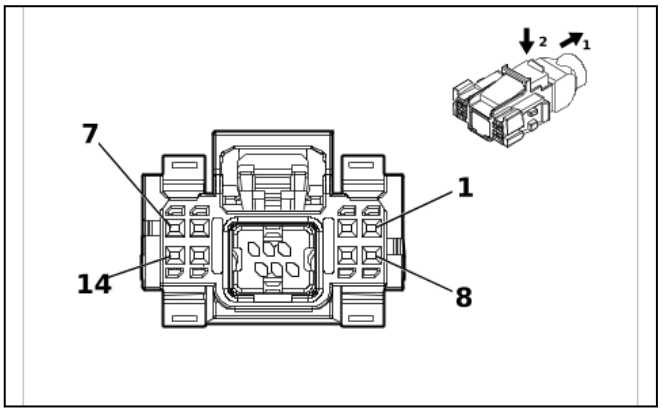

5500325

Connector Part Information

- Harness Type: Front Seat Wiring Harness - Driver
- OEM Connector: 13532130
- Service Connector: Service by Harness - See Part Catalog
- Description: 14-Way F 0.5 MQS, High Speed Autolink Series(GY)

Terminal Part Information

Terminal Type ID	Terminated Lead	Diagnostic Test Probe	Terminal Removal Tool
I	Not required	No Tool Required	No Tool Required

P22E Video Display - Left Front Seat Back (UW9)

Pin	Size	Color	Circuit	Function	Terminal Type ID	Option
(1) 1	(1) —	(1) RD / BN	(1) 3640	(1) Battery Positive Voltage	(1) I	(1) —
2 - 8	—	—	—	Not Occupied	—	—
(9) 9	(9) —	(9) BK / WH	(9) 1451	(9) Signal Ground	(9) I	(9) —
10 - 14	—	—	—	Not Occupied	—	—
GY	—	—	LVDS	Low Voltage Differential Signaling Cable	I	—

P22F Video Display - Right Front Seat Back (UW9)

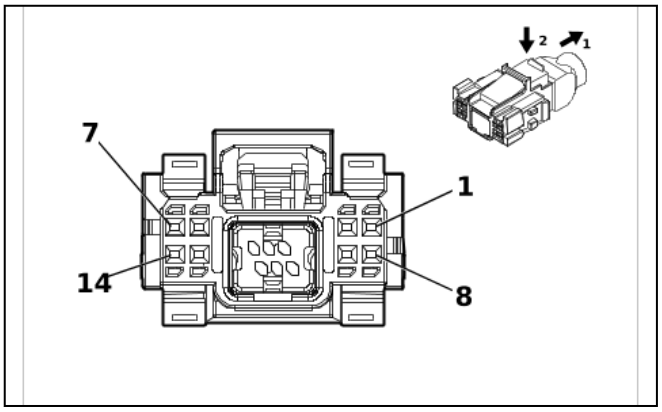

5500325

Connector Part Information

- Harness Type: Front Seat Wiring Harness - Passenger
- OEM Connector: 13532130
- Service Connector: Service by Harness - See Part Catalog
- Description: 14-Way F 0.5 MQS, High Speed Autolink Series(GY)

Terminal Part Information

Terminal Type ID	Terminated Lead	Diagnostic Test Probe	Terminal Removal Tool
I	Not required	No Tool Required	No Tool Required

P22F Video Display - Right Front Seat Back (UW9)

Pin	Size	Color	Circuit	Function	Terminal Type ID	Option
(1) 1	(1) —	(1) RD / BN	(1) 3640	(1) Battery Positive Voltage	(1) I	(1) —
2 - 8	—	—	—	Not Occupied	—	—
(9) 9	(9) —	(9) BK / WH	(9) 1451	(9) Signal Ground	(9) I	(9) —
10 - 14	—	—	—	Not Occupied	—	—
GY	—	—	LVDS	Low Voltage Differential Signaling Cable	I	—

P25 Content Theft Deterrent Alarm (UTR)

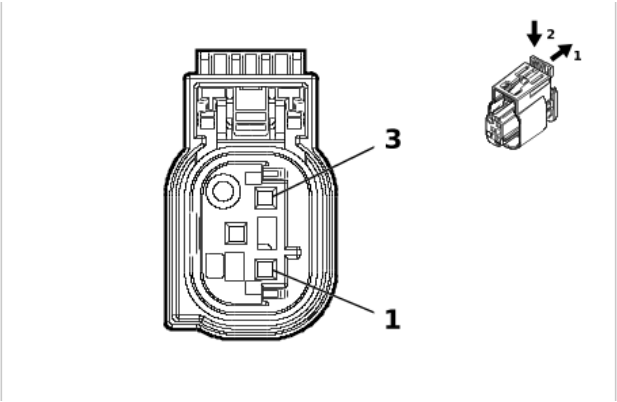

2534360

Connector Part Information

- Harness Type: Body Wiring Harness
- OEM Connector: 13623745
- Service Connector: 84999471
- Description: 3-Way F 0.64 Micro-Quadlock Series, Sealed(BK)

Terminal Part Information

Terminal Type ID	Terminated Lead	Diagnostic Test Probe	Terminal Removal Tool
I	Not required	J-35616-64B (L-BU)	No Tool Required

P25 Content Theft Deterrent Alarm (UTR)

Pin	Size	Color	Circuit	Function	Terminal Type ID	Option
(1) 1	(1) 0.75	(1) BK	(1) 150	(1) Ground	(1) I	(1) —
(2) 2	(2) 0.5	(2) GN / BU	(2) 6133	(2) Body Control Module LIN Bus 2	(2) I	(2) —
(3) 3	(3) 0.5	(3) RD / YE	(3) 13140	(3) Battery Positive Voltage	(3) I	(3) —

P29 Head-Up Display X1 (UV6)

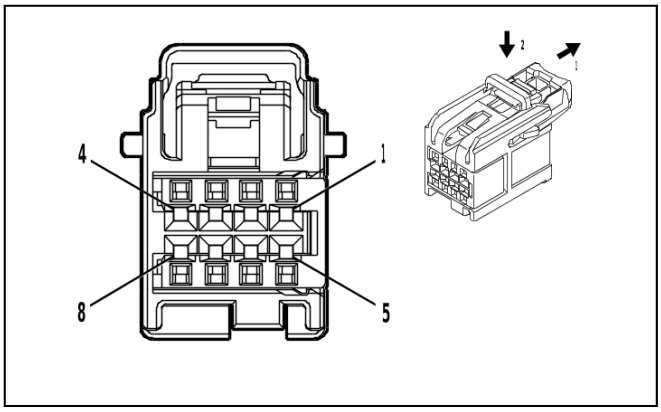

4935776

Connector Part Information

- Harness Type: Instrument Panel Wiring Harness
- OEM Connector: 15526972
- Service Connector: 19370429
- Description: 8-Way F 0.64 OCS Series(BK)

Terminal Part Information

Terminal Type ID	Terminated Lead	Diagnostic Test Probe	Terminal Removal Tool
I	Not required	J-35616-64B (L-BU)	No Tool Required

P29 Head-Up Display X1 (UV6)

Pin	Size	Color	Circuit	Function	Terminal Type ID	Option
1 - 3	—	—	—	Not Occupied	—	—
(4) 4	(4) 0.5	(4) BK / WH	(4) 1451	(4) Signal Ground	(4) I	(4) —
5	—	—	—	Not Occupied	—	—
(6) 6	(6) 0.5	(6) RD / WH	(6) 1340	(6) Battery Positive Voltage	(6) I	(6) —
7 - 8	—	—	—	Not Occupied	—	—

P29 Head-Up Display X2 (UV6)

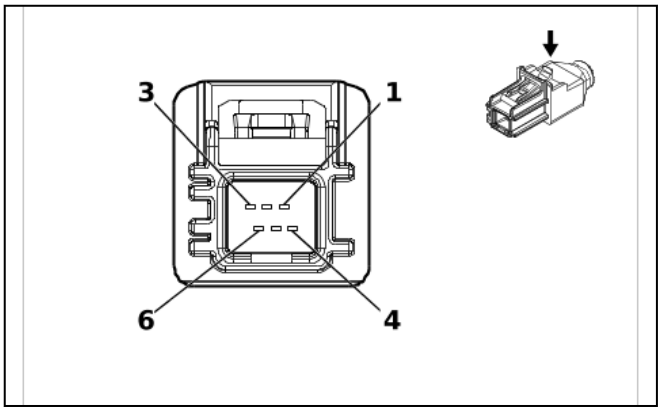

6175927

Connector Part Information
- Harness Type: Instrument Panel Wiring Harness
- OEM Connector: 100337-1323
- Service Connector: Service by Cable Assembly — See Part Catalog
- Description: 6-Way M HSAL-2 Series(GN)

Terminal Part Information

Terminal Type ID	Terminated Lead	Diagnostic Test Probe	Terminal Removal Tool
I	Not required	No Tool Required	No Tool Required

P29 Head-Up Display X2 (UV6)

Pin	Size	Color	Circuit	Function	Terminal Type ID	Option
—	—	LVDS	—	(Head Up Display) Head Up Display Signal	I	—

P37LG Rear Closure Hands Free Alarm (TCP)

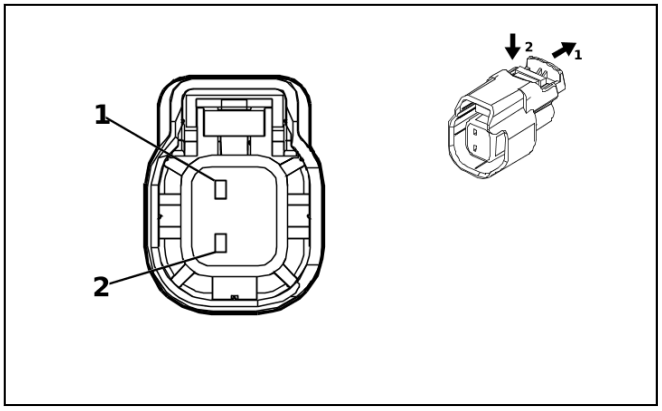

3028817

Connector Part Information
- Harness Type: Liftgate Wiring Harness
- OEM Connector: 34062-0030
- Service Connector: Service by Harness - See Part Catalog
- Description: 2-Way F 1.5 Series, Sealed(GY)

Terminal Part Information

Terminal Type ID	Terminated Lead	Diagnostic Test Probe	Terminal Removal Tool
I	Not required	J-35616-14 (GN)	No Tool Required

P37LG Rear Closure Hands Free Alarm (TCP)

Pin	Size	Color	Circuit	Function	Terminal Type ID	Option
(1) 1	(1) 0.5	(1) BK	(1) 2050	(1) Ground	(1) I	(1) —
(2) 2	(2) 0.5	(2) WH / VT	(2) 12481	(2) Hands Free Closure Release Sensor Alarm Control	(2) I	(2) —

P43 Forward Collision Alert Display (UEU - UV6)

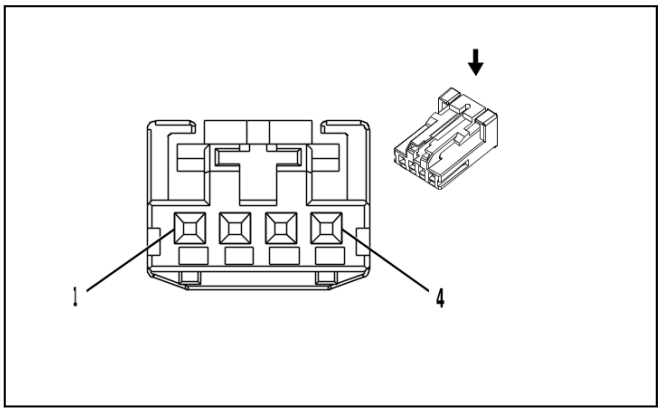

2717162

Connector Part Information

- Harness Type: Instrument Panel Wiring Harness
- OEM Connector: 1-936119-1
- Service Connector: 19367524
- Description: 4-Way F 0.64 Micro-Quadlock Series(BK)

Terminal Part Information

Terminal Type ID	Terminated Lead	Diagnostic Test Probe	Terminal Removal Tool
I	Not required	J-35616-64B (L-BU)	No Tool Required

P43 Forward Collision Alert Display (UEU - UV6)

Pin	Size	Color	Circuit	Function	Terminal Type ID	Option
(1) 1	(1) 0.5	(1) VT / WH	(1) 639	(1) Run/Crank Ignition 1 Voltage	(1) I	(1) —
(2) 2	(2) 0.35	(2) GY / YE	(2) 3885	(2) Forward Collision Alert LED Control	(2) I	(2) —
(3) 3	(3) 0.35	(3) GY / BK	(3) 4787	(3) Day Night LED Control	(3) I	(3) —
(4) 4	(4) 0.5	(4) BK / WH	(4) 1851	(4) Signal Ground	(4) I	(4) —

P45L Front Seat Lane Departure Warning Actuator - Left (HS1)

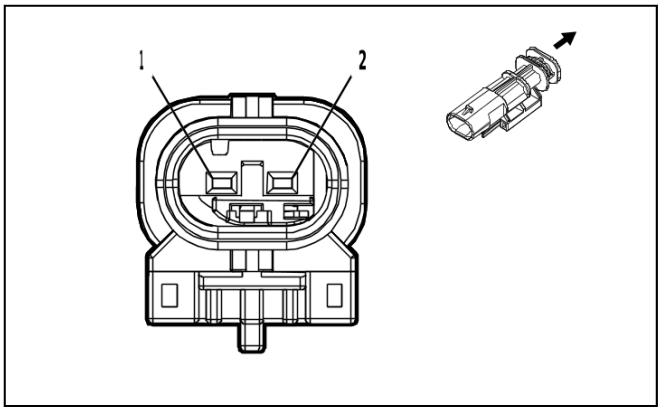

4569729

Connector Part Information
- Harness Type: Front Seat Wiring Harness - Driver
- OEM Connector: 13514252
- Service Connector: Service by Harness - See Part Catalog
- Description: 2-Way M 1.2 MCON Series, Sealed(BK)

Terminal Part Information

Terminal Type ID	Terminated Lead	Diagnostic Test Probe	Terminal Removal Tool
I	Not required	No Tool Required	No Tool Required

P45L Front Seat Lane Departure Warning Actuator - Left (HS1)

Pin	Size	Color	Circuit	Function	Terminal Type ID	Option
(1) 1	(1) —	(1) BK	(1) 1150	(1) Ground	(1) I	(1) —
(2) 2	(2) —	(2) YE / BN	(2) 3037	(2) Driver Seat Left Rear Haptic Movement Motor Control	(2) I	(2) —

P45R Front Seat Lane Departure Warning Actuator - Right (HS1)

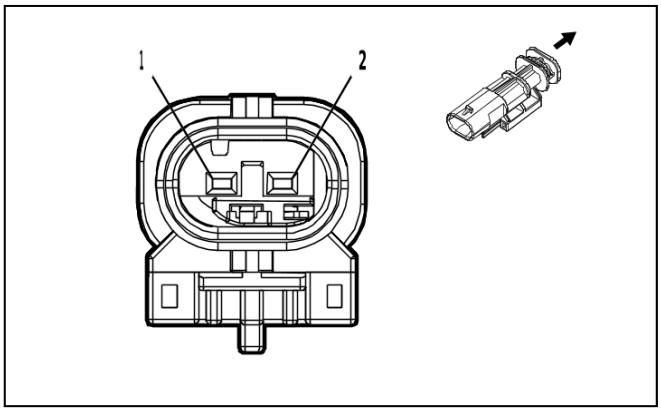

4569729

Connector Part Information
- Harness Type: Front Seat Wiring Harness - Driver
- OEM Connector: 13514252
- Service Connector: Service by Harness - See Part Catalog
- Description: 2-Way M 1.2 MCON Series, Sealed(BK)

Terminal Part Information

Terminal Type ID	Terminated Lead	Diagnostic Test Probe	Terminal Removal Tool
I	Not required	No Tool Required	No Tool Required

P45R Front Seat Lane Departure Warning Actuator - Right (HS1)

Pin	Size	Color	Circuit	Function	Terminal Type ID	Option
(1) 1	(1) —	(1) BK	(1) 1150	(1) Ground	(1) I	(1) —
(2) 2	(2) —	(2) BN	(2) 3038	(2) Driver Seat Right Rear Haptic Movement Motor Control	(2) I	(2) —

P50 Regulatory Emergency Call Backup Speaker (UER)

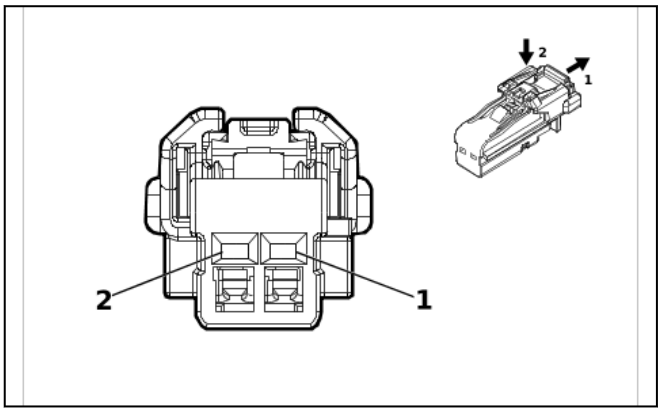

4115691

Connector Part Information

- Harness Type: Instrument Panel Wiring Harness
- OEM Connector: 6098-8988
- Service Connector: 87816612
- Description: 2-Way F 1.2 MCON Series(BK)

Terminal Part Information

Terminal Type ID	Terminated Lead	Diagnostic Test Probe	Terminal Removal Tool
I	Not required	J-35616-12 (BU)	No Tool Required

P50 Regulatory Emergency Call Backup Speaker (UER)

Pin	Size	Color	Circuit	Function	Terminal Type ID	Option
(1) 1	(1) 0.35	(1) WH / BK	(1) 4769	(1) Emergency Call Backup Speaker [-] Control	(1) I	(1) —
(2) 2	(2) 0.35	(2) GY / GN	(2) 4770	(2) Emergency Call Backup Speaker [+] Control	(2) I	(2) —

P51 Steering Wheel LED Display (UKL)

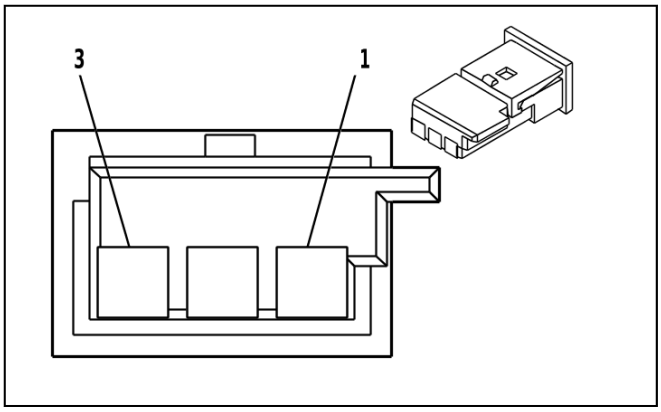

647970

Connector Part Information

- Harness Type: Steering Wheel Horn Switch Wiring Harness
- OEM Connector: 1-1718346-1
- Service Connector: Service by Harness - See Part Catalog
- Description: 3-Way F 0.64 Micro-Quadlock Series(BK)

Terminal Part Information

Terminal Type ID	Terminated Lead	Diagnostic Test Probe	Terminal Removal Tool
I	Not required	J-35616-64B (L-BU)	No Tool Required

P51 Steering Wheel LED Display (UKL)

Pin	Size	Color	Circuit	Function	Terminal Type ID	Option
(1) 1	(1) 0.35	(1) BU / BN	(1) 7744	(1) Driver Illumination Lamp Ground	(1) I	(1) —
(2) 2	(2) 0.35	(2) YE / BU	(2) 2245	(2) Driver Illumination Lamp 2 Control	(2) I	(2) —
(3) 3	(3) 0.35	(3) WH / VT	(3) 2246	(3) Driver Illumination Lamp 1 Control	(3) I	(3) —

Q2 Air Conditioning Clutch

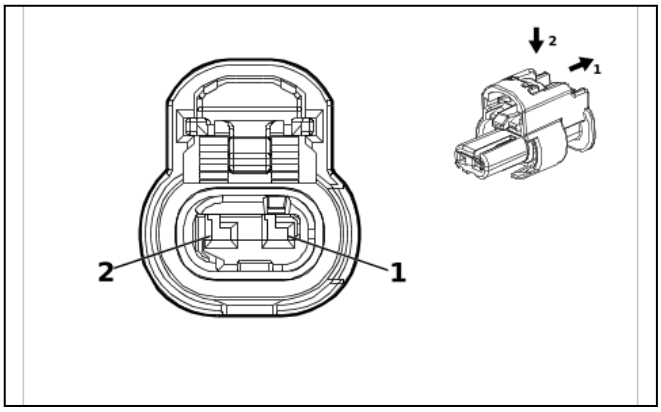

4649903

Connector Part Information
- Harness Type: Engine Wiring Harness
- OEM Connector: 1-2296694-1
- Service Connector: 85761014
- Description: 2-Way F 1.2 MCON Series, Sealed(BK)

Terminal Part Information

Terminal Type ID	Terminated Lead	Diagnostic Test Probe	Terminal Removal Tool
I	Not required	J-35616-16 (L-GN)	No Tool Required

Q2 Air Conditioning Clutch

Pin	Size	Color	Circuit	Function	Terminal Type ID	Option
(1) 1	(1) 0.75	(1) BK	(1) 6550	(1) Ground	(1) I	(1) —
(2) 2	(2) 0.75	(2) BN / GN	(2) 59	(2) Air Conditioning Compressor Clutch Control	(2) I	(2) —

Q4 Automatic Level Control Solenoid Valve (F47)

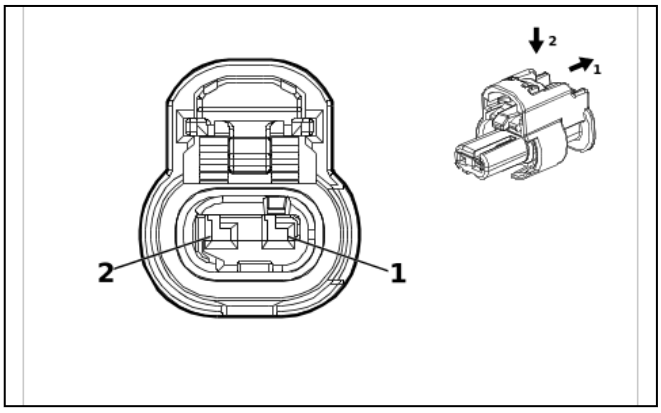

4649903

Connector Part Information
- Harness Type: Chassis Wiring Harness
- OEM Connector: 1-2296694-1
- Service Connector: 85761014
- Description: 2-Way F 1.2 MCON Series, Sealed(BK)

Terminal Part Information

Terminal Type ID	Terminated Lead	Diagnostic Test Probe	Terminal Removal Tool
I	Not required	J-35616-16 (L-GN)	No Tool Required

Q4 Automatic Level Control Solenoid Valve (F47)

Pin	Size	Color	Circuit	Function	Terminal Type ID	Option
(1) 1	(1) 0.5	(1) WH / BU	(1) 3261	(1) Vehicle Level Control Exhaust Solenoid Valve Control	(1) I	(1) —
(2) 2	(2) 0.5	(2) WH / GN	(2) 320	(2) Vehicle Level Control Exhaust Solenoid Valve Control	(2) I	(2) —

Q6F Camshaft Position Actuator Solenoid Valve - Intake (L84 / L87)

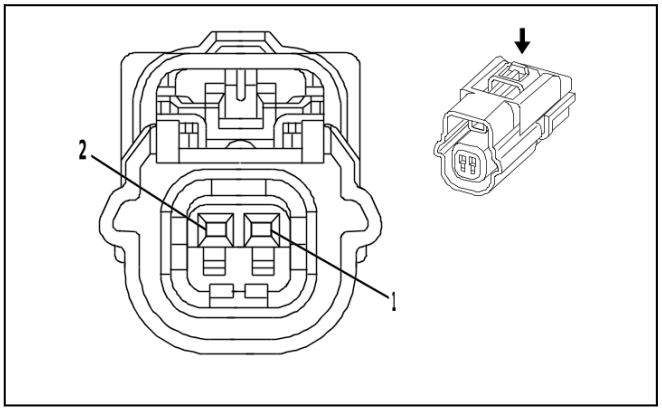

1664592

Connector Part Information

- Harness Type: Camshaft Position Sensor Wire
- OEM Connector: 54390239
- Service Connector: Service by Harness - See Part Catalog
- Description: 2-Way F 0.64 Kaizen Series, Sealed(BK)

Terminal Part Information

Terminal Type ID	Terminated Lead	Diagnostic Test Probe	Terminal Removal Tool
I	Not required	J-35616-64B (L-BU)	No Tool Required

Q6F Camshaft Position Actuator Solenoid Valve - Intake (L84 / L87)

Pin	Size	Color	Circuit	Function	Terminal Type ID	Option
(1) 1	(1) 0.5	(1) BK / BN	(1) 6753	(1) Camshaft Position Actuator Solenoid Valve 1 Low Reference	(1) I	(1) —
(2) 2	(2) 0.5	(2) VT / BN	(2) 5284	(2) Intake Camshaft Position Actuator Solenoid Valve 1	(2) I	(2) —

Q12 Evaporative Emission Canister Purge Solenoid Valve (L84 / L87)

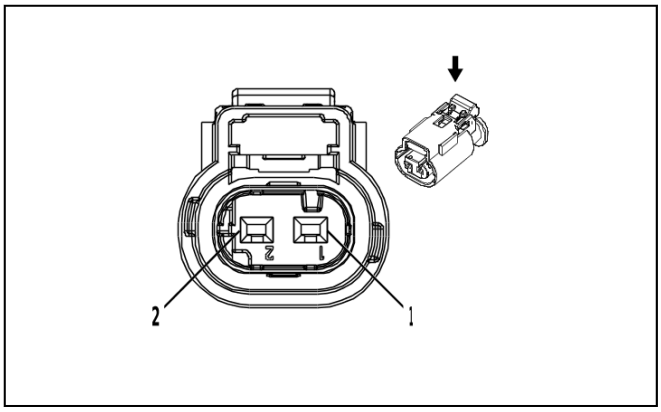

2717066

Connector Part Information
- Harness Type: Engine Wiring Harness
- OEM Connector: 10010337
- Service Connector: 13587326
- Description: 2-Way F 1.2 Multilock Series, Sealed(BK)

Terminal Part Information

Terminal Type ID	Terminated Lead	Diagnostic Test Probe	Terminal Removal Tool
I	Not required	J-35616-16 (L-GN)	No Tool Required

Q12 Evaporative Emission Canister Purge Solenoid Valve (L84 / L87)

Pin	Size	Color	Circuit	Function	Terminal Type ID	Option
(1) 1	(1) 0.75	(1) VT / BU	(1) 5293	(1) Powertrain Main Relay Fused Supply Voltage 4	(1) I	(1) —
(2) 2	(2) 0.75	(2) GN / BU	(2) 428	(2) EVAP Canister Purge Solenoid Control	(2) I	(2) —

Q13 Evaporative Emission Canister Vent Solenoid Valve (L84 / L87)

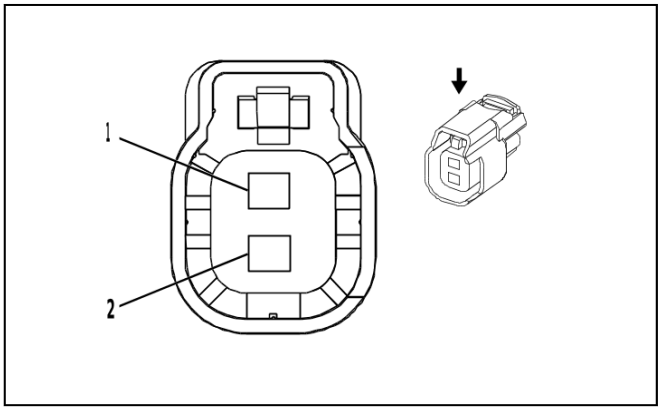

2422378

Connector Part Information
- Harness Type: Chassis Wiring Harness
- OEM Connector: 34062-0028
- Service Connector: 13579002
- Description: 2-Way F 1.5 Series, Sealed(BK)

Terminal Part Information

Terminal Type ID	Terminated Lead	Diagnostic Test Probe	Terminal Removal Tool
I	Not required	J-35616-14 (GN)	No Tool Required

Q13 Evaporative Emission Canister Vent Solenoid Valve (L84 / L87)

Pin	Size	Color	Circuit	Function	Terminal Type ID	Option
(1) 1	(1) 0.5	(1) WH	(1) 1310	(1) EVAP Vent Solenoid Valve Control	(1) I	(1) —
(2) 2	(2) 0.5	(2) RD / WH	(2) 2040	(2) Battery Positive Voltage	(2) I	(2) —

Q14A Exhaust Gas Recirculation Valve 1 (LZ0)

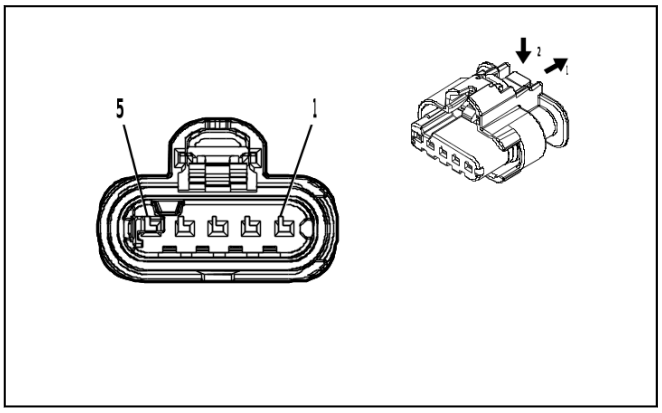

4997783

Connector Part Information

- Harness Type: Engine Wiring Harness
- OEM Connector: 1-2296697-1
- Service Connector: 19371195
- Description: 5-Way F 1.2 MCON-CB Series, Sealed(BK)

Terminal Part Information

Terminal Type ID	Terminated Lead	Diagnostic Test Probe	Terminal Removal Tool
I	Not required	J-35616-16 (L-GN)	No Tool Required

Q14A Exhaust Gas Recirculation Valve 1 (LZ0)

Pin	Size	Color	Circuit	Function	Terminal Type ID	Option
(1) 1	(1) 0.5	(1) BU / RD	(1) 460	(1) Engine Control Sensors 5 Volt Reference 1	(1) I	(1) —
(2) 2	(2) 0.5	(2) BN / WH	(2) 5763	(2) Exhaust Gas Recirculation Position Signal	(2) I	(2) —
(3) 3	(3) 0.5	(3) BK / YE	(3) 548	(3) Engine Control Sensors Low Reference 1	(3) I	(3) —
(4) 4	(4) 0.75	(4) WH / VT	(4) 5764	(4) Exhaust Gas Recirculation Valve High Control	(4) I	(4) —
(5) 5	(5) 0.75	(5) VT / BK	(5) 5746	(5) Exhaust Gas Recirculation Valve Low Control	(5) I	(5) —

Q14B Exhaust Gas Recirculation Valve 2 (LZ0)

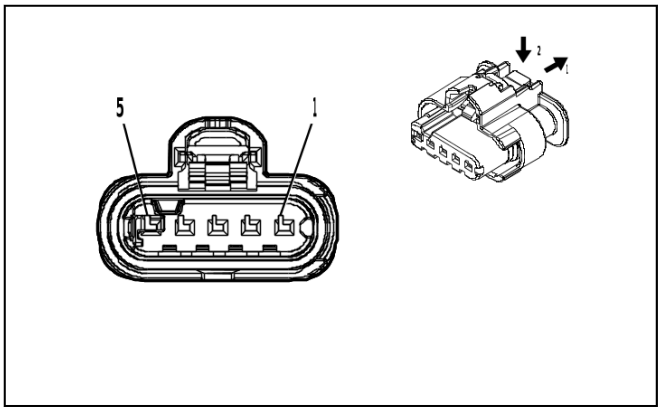

4997783

Connector Part Information

- Harness Type: Engine Wiring Harness
- OEM Connector: 1-2296697-1
- Service Connector: 19371195
- Description: 5-Way F 1.2 MCON-CB Series, Sealed(BK)

Terminal Part Information

Terminal Type ID	Terminated Lead	Diagnostic Test Probe	Terminal Removal Tool
I	Not required	J-35616-16 (L-GN)	No Tool Required

Q14B Exhaust Gas Recirculation Valve 2 (LZ0)

Pin	Size	Color	Circuit	Function	Terminal Type ID	Option
(1) 1	(1) 0.5	(1) BK / YE	(1) 548	(1) Engine Control Sensors Low Reference 1	(1) I	(1) —
(2) 2	(2) 0.5	(2) BU / GN	(2) 4012	(2) Exhaust Gas Recirculation 2 Valve Position Sensor Signal	(2) I	(2) —
(3) 3	(3) 0.5	(3) BU / RD	(3) 460	(3) Engine Control Sensors 5 Volt Reference 1	(3) I	(3) —
(4) 4	(4) 0.75	(4) BU / WH	(4) 4014	(4) Exhaust Gas Recirculation 2 Valve Open Control	(4) I	(4) —
(5) 5	(5) 0.75	(5) BU / BN	(5) 4013	(5) Exhaust Gas Recirculation 2 Valve Close Control	(5) I	(5) —

Q17A Fuel Injector 1 (L84 / L87)

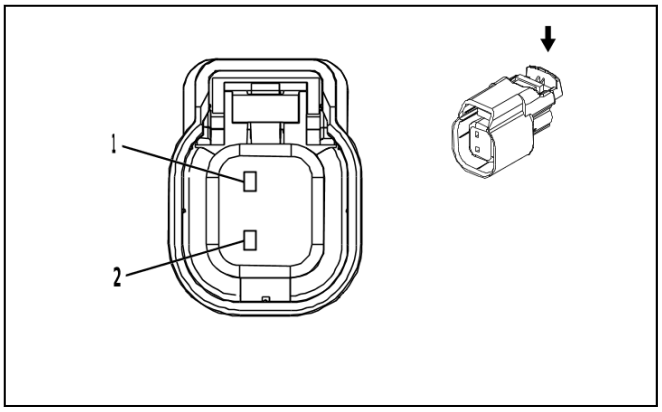

2792100

Connector Part Information
- Harness Type: Fuel Injector Wiring Harness - Left
- OEM Connector: 340624008
- Service Connector: Service by Harness - See Part Catalog
- Description: 2-Way F 1.5 Series, Sealed(BK)

Terminal Part Information

Terminal Type ID	Terminated Lead	Diagnostic Test Probe	Terminal Removal Tool
I	Not required	J-35616-2A (GY)	No Tool Required

Q17A Fuel Injector 1 (L84 / L87)

Pin	Size	Color	Circuit	Function	Terminal Type ID	Option
(1) 1	(1) 0.75	(1) BN / WH	(1) 4901	(1) Direct Fuel Injector High Voltage Supply Cylinder 1	(1) I	(1) —
(2) 2	(2) 0.75	(2) BN	(2) 4801	(2) Direct Fuel Injector High Voltage Control Cylinder 1	(2) I	(2) —

Q17A Fuel Injector 1 (LZ0)

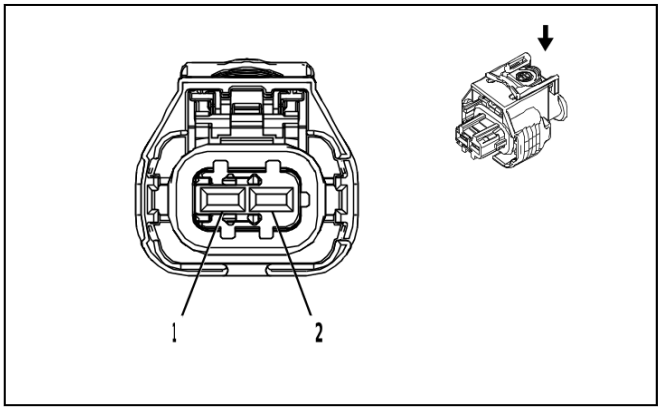

2845578

Connector Part Information
- Harness Type: Fuel Injector Wiring Harness
- OEM Connector: 1 928 405 715
- Service Connector: Service by Harness - See Part Catalog
- Description: 2-Way F 2.8 Series, Sealed(BK)

Terminal Part Information

Terminal Type ID	Terminated Lead	Diagnostic Test Probe	Terminal Removal Tool
I	Not required	J-35616-35 (VT)	No Tool Required

Q17A Fuel Injector 1 (LZ0)

Pin	Size	Color	Circuit	Function	Terminal Type ID	Option
(1) 1	(1) 1.5	(1) BN / WH	(1) 4901	(1) Direct Fuel Injector High Voltage Supply Cylinder 1	(1) I	(1) —
(2) 2	(2) 1.5	(2) BN	(2) 4801	(2) Direct Fuel Injector High Voltage Control Cylinder 1	(2) I	(2) —

Q17B Fuel Injector 2 (L84 / L87)

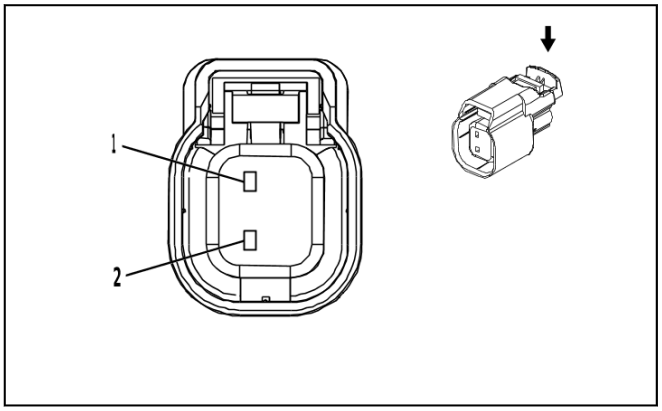

2792100

Connector Part Information

- Harness Type: Fuel Injector Wiring Harness - Right
- OEM Connector: 340624008
- Service Connector: Service by Harness - See Part Catalog
- Description: 2-Way F 1.5 Series, Sealed(BK)

Terminal Part Information

Terminal Type ID	Terminated Lead	Diagnostic Test Probe	Terminal Removal Tool
I	Not required	J-35616-2A (GY)	No Tool Required

Q17B Fuel Injector 2 (L84 / L87)

Pin	Size	Color	Circuit	Function	Terminal Type ID	Option
(1) 1	(1) 0.75	(1) BU / GY	(1) 4902	(1) Direct Fuel Injector High Voltage Supply Cylinder 2	(1) I	(1) —
(2) 2	(2) 0.75	(2) BU	(2) 4802	(2) Direct Fuel Injector High Voltage Control Cylinder 2	(2) I	(2) —

Q17B Fuel Injector 2 (LZ0)

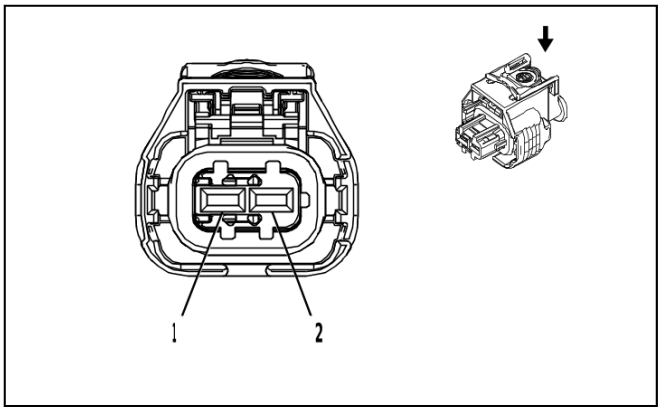

2845578

Connector Part Information
- Harness Type: Fuel Injector Wiring Harness
- OEM Connector: 1 928 405 715
- Service Connector: Service by Harness - See Part Catalog
- Description: 2-Way F 2.8 Series, Sealed(BK)

Terminal Part Information

Terminal Type ID	Terminated Lead	Diagnostic Test Probe	Terminal Removal Tool
I	Not required	J-35616-35 (VT)	No Tool Required

Q17B Fuel Injector 2 (LZ0)

Pin	Size	Color	Circuit	Function	Terminal Type ID	Option
(1) 1	(1) 1.5	(1) BU / GY	(1) 4902	(1) Direct Fuel Injector High Voltage Supply Cylinder 2	(1) I	(1) —
(2) 2	(2) 1.5	(2) BU	(2) 4802	(2) Direct Fuel Injector High Voltage Control Cylinder 2	(2) I	(2) —

Q17C Fuel Injector 3 (L84 / L87)

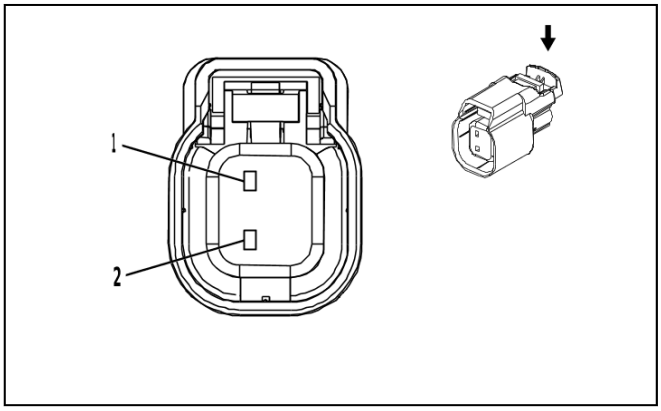

2792100

Connector Part Information
- Harness Type: Fuel Injector Wiring Harness - Left
- OEM Connector: 340624008
- Service Connector: Service by Harness - See Part Catalog
- Description: 2-Way F 1.5 Series, Sealed(BK)

Terminal Part Information

Terminal Type ID	Terminated Lead	Diagnostic Test Probe	Terminal Removal Tool
I	Not required	J-35616-2A (GY)	No Tool Required

Q17C Fuel Injector 3 (L84 / L87)

Pin	Size	Color	Circuit	Function	Terminal Type ID	Option
(1) 1	(1) 0.75	(1) GN / GY	(1) 4903	(1) Direct Fuel Injector High Voltage Supply Cylinder 3	(1) I	(1) —
(2) 2	(2) 0.75	(2) GN	(2) 4803	(2) Direct Fuel Injector High Voltage Control Cylinder 3	(2) I	(2) —

Q17C Fuel Injector 3 (LZ0)

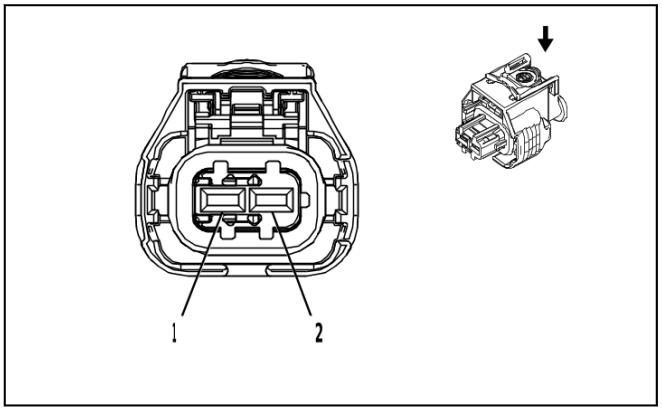

2845578

Connector Part Information

- Harness Type: Fuel Injector Wiring Harness
- OEM Connector: 1 928 405 715
- Service Connector: Service by Harness - See Part Catalog
- Description: 2-Way F 2.8 Series, Sealed(BK)

Terminal Part Information

Terminal Type ID	Terminated Lead	Diagnostic Test Probe	Terminal Removal Tool
I	Not required	J-35616-35 (VT)	No Tool Required

Q17C Fuel Injector 3 (LZ0)

Pin	Size	Color	Circuit	Function	Terminal Type ID	Option
(1) 1	(1) 1.5	(1) GN / GY	(1) 4903	(1) Direct Fuel Injector High Voltage Supply Cylinder 3	(1) I	(1) —
(2) 2	(2) 1.5	(2) GN	(2) 4803	(2) Direct Fuel Injector High Voltage Control Cylinder 3	(2) I	(2) —

Q17D Fuel Injector 4 (L84 / L87)

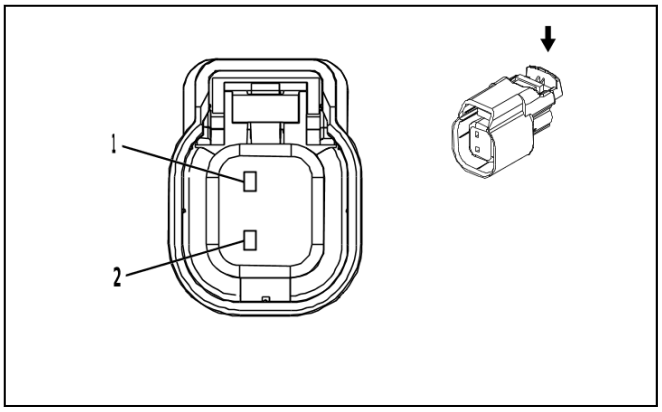

2792100

Connector Part Information
- Harness Type: Fuel Injector Wiring Harness - Right
- OEM Connector: 340624008
- Service Connector: Service by Harness - See Part Catalog
- Description: 2-Way F 1.5 Series, Sealed(BK)

Terminal Part Information

Terminal Type ID	Terminated Lead	Diagnostic Test Probe	Terminal Removal Tool
I	Not required	J-35616-2A (GY)	No Tool Required

Q17D Fuel Injector 4 (L84 / L87)

Pin	Size	Color	Circuit	Function	Terminal Type ID	Option
(1) 1	(1) 0.75	(1) BU / WH	(1) 4904	(1) Direct Fuel Injector High Voltage Supply Cylinder 4	(1) I	(1) —
(2) 2	(2) 0.75	(2) GY / BU	(2) 4804	(2) Direct Fuel Injector High Voltage Control Cylinder 4	(2) I	(2) —

Q17D Fuel Injector 4 (LZ0)

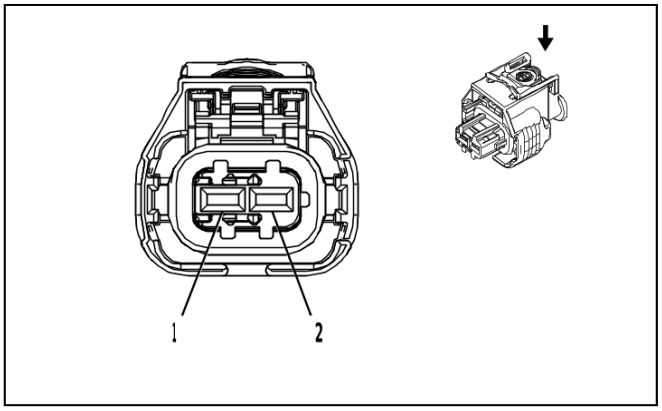

2845578

Connector Part Information
- Harness Type: Fuel Injector Wiring Harness
- OEM Connector: 1 928 405 715
- Service Connector: Service by Harness - See Part Catalog
- Description: 2-Way F 2.8 Series, Sealed(BK)

Terminal Part Information

Terminal Type ID	Terminated Lead	Diagnostic Test Probe	Terminal Removal Tool
I	Not required	J-35616-35 (VT)	No Tool Required

Q17D Fuel Injector 4 (LZ0)

Pin	Size	Color	Circuit	Function	Terminal Type ID	Option
(1) 1	(1) 1.5	(1) BU / WH	(1) 4904	(1) Direct Fuel Injector High Voltage Supply Cylinder 4	(1) I	(1) —
(2) 2	(2) 1.5	(2) GY / BU	(2) 4804	(2) Direct Fuel Injector High Voltage Control Cylinder 4	(2) I	(2) —

Q17E Fuel Injector 5 (L84 / L87)

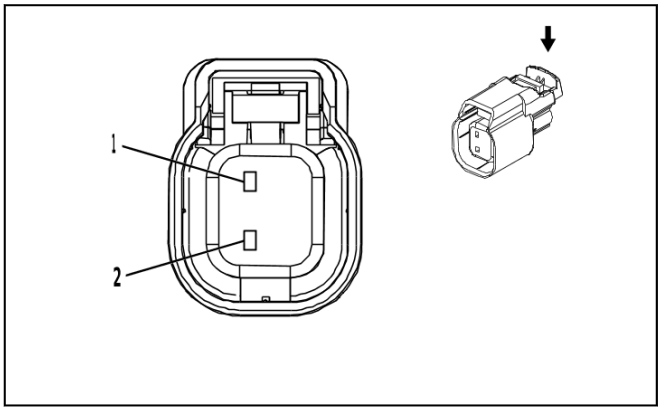

2792100

Connector Part Information

- Harness Type: Fuel Injector Wiring Harness - Left
- OEM Connector: 340624008
- Service Connector: Service by Harness - See Part Catalog
- Description: 2-Way F 1.5 Series, Sealed(BK)

Terminal Part Information

Terminal Type ID	Terminated Lead	Diagnostic Test Probe	Terminal Removal Tool
I	Not required	J-35616-2A (GY)	No Tool Required

Q17E Fuel Injector 5 (L84 / L87)

Pin	Size	Color	Circuit	Function	Terminal Type ID	Option
(1) 1	(1) 0.75	(1) GN / WH	(1) 4905	(1) Direct Fuel Injector High Voltage Supply Cylinder 5	(1) I	(1) —
(2) 2	(2) 0.75	(2) WH / GN	(2) 4805	(2) Direct Fuel Injector High Voltage Control Cylinder 5	(2) I	(2) —

Q17E Fuel Injector 5 (LZ0)

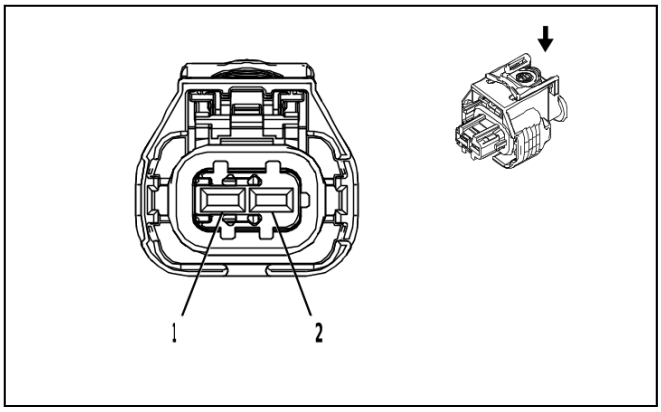

2845578

Connector Part Information
- Harness Type: Fuel Injector Wiring Harness
- OEM Connector: 1 928 405 715
- Service Connector: Service by Harness - See Part Catalog
- Description: 2-Way F 2.8 Series, Sealed(BK)

Terminal Part Information

Terminal Type ID	Terminated Lead	Diagnostic Test Probe	Terminal Removal Tool
I	Not required	J-35616-35 (VT)	No Tool Required

Q17E Fuel Injector 5 (LZ0)

Pin	Size	Color	Circuit	Function	Terminal Type ID	Option
(1) 1	(1) 1.5	(1) GN / WH	(1) 4905	(1) Direct Fuel Injector High Voltage Supply Cylinder 5	(1) I	(1) —
(2) 2	(2) 1.5	(2) WH / GN	(2) 4805	(2) Direct Fuel Injector High Voltage Control Cylinder 5	(2) I	(2) —

Q17F Fuel Injector 6 (L84 / L87)

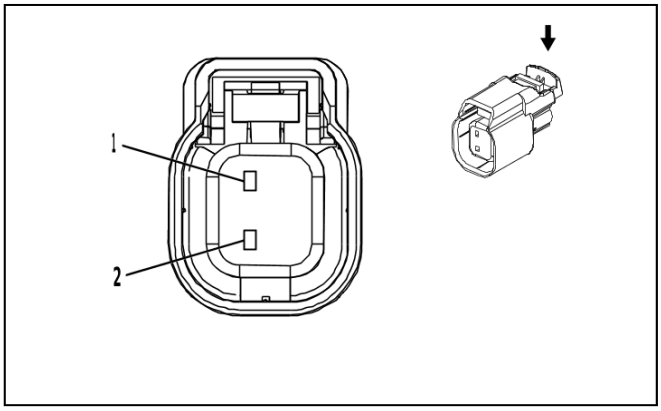

2792100

Connector Part Information
- Harness Type: Fuel Injector Wiring Harness - Right
- OEM Connector: 340624008
- Service Connector: Service by Harness - See Part Catalog
- Description: 2-Way F 1.5 Series, Sealed(BK)

Terminal Part Information

Terminal Type ID	Terminated Lead	Diagnostic Test Probe	Terminal Removal Tool
I	Not required	J-35616-2A (GY)	No Tool Required

Q17F Fuel Injector 6 (L84 / L87)

Pin	Size	Color	Circuit	Function	Terminal Type ID	Option
(1) 1	(1) 0.75	(1) VT / GY	(1) 4906	(1) Direct Fuel Injector High Voltage Supply Cylinder 6	(1) I	(1) —
(2) 2	(2) 0.75	(2) VT / GN	(2) 4806	(2) Direct Fuel Injector High Voltage Control Cylinder 6	(2) I	(2) —

Q17F Fuel Injector 6 (LZ0)

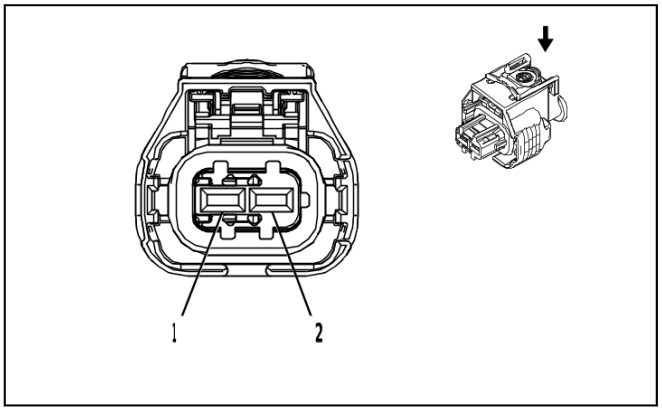

2845578

Connector Part Information

- Harness Type: Fuel Injector Wiring Harness
- OEM Connector: 1 928 405 715
- Service Connector: Service by Harness - See Part Catalog
- Description: 2-Way F 2.8 Series, Sealed(BK)

Terminal Part Information

Terminal Type ID	Terminated Lead	Diagnostic Test Probe	Terminal Removal Tool
I	Not required	J-35616-35 (VT)	No Tool Required

Q17F Fuel Injector 6 (LZ0)

Pin	Size	Color	Circuit	Function	Terminal Type ID	Option
(1) 1	(1) 1.5	(1) VT / GY	(1) 4906	(1) Direct Fuel Injector High Voltage Supply Cylinder 6	(1) I	(1) —
(2) 2	(2) 1.5	(2) VT / GN	(2) 4806	(2) Direct Fuel Injector High Voltage Control Cylinder 6	(2) I	(2) —

Q17G Fuel Injector 7 (L84 / L87)

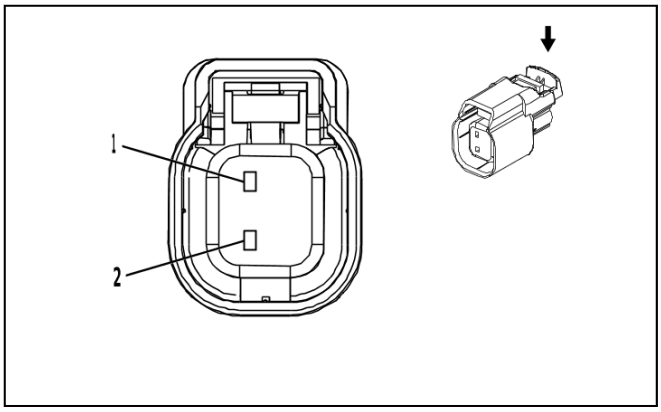

2792100

Connector Part Information
- Harness Type: Fuel Injector Wiring Harness - Left
- OEM Connector: 340624008
- Service Connector: Service by Harness - See Part Catalog
- Description: 2-Way F 1.5 Series, Sealed(BK)

Terminal Part Information

Terminal Type ID	Terminated Lead	Diagnostic Test Probe	Terminal Removal Tool
I	Not required	J-35616-2A (GY)	No Tool Required

Q17G Fuel Injector 7 (L84 / L87)

Pin	Size	Color	Circuit	Function	Terminal Type ID	Option
(1) 1	(1) 0.75	(1) WH / YE	(1) 4907	(1) Direct Fuel Injector High Voltage Supply Cylinder 7	(1) I	(1) —
(2) 2	(2) 0.75	(2) YE / GY	(2) 4807	(2) Direct Fuel Injector High Voltage Control Cylinder 7	(2) I	(2) —

Q17H Fuel Injector 8 (L84 / L87)

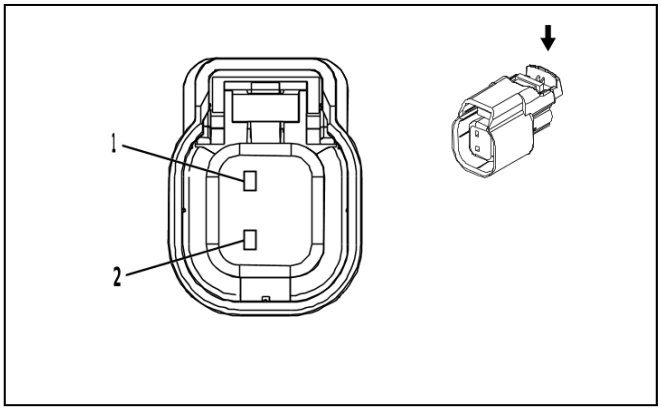

2792100

Connector Part Information
- Harness Type: Fuel Injector Wiring Harness - Right
- OEM Connector: 340624008
- Service Connector: Service by Harness - See Part Catalog
- Description: 2-Way F 1.5 Series, Sealed(BK)

Terminal Part Information

Terminal Type ID	Terminated Lead	Diagnostic Test Probe	Terminal Removal Tool
I	Not required	J-35616-2A (GY)	No Tool Required

Q17H Fuel Injector 8 (L84 / L87)

Pin	Size	Color	Circuit	Function	Terminal Type ID	Option
(1) 1	(1) 0.75	(1) GY / WH	(1) 4908	(1) Direct Fuel Injector High Voltage Supply Cylinder 8	(1) I	(1) —
(2) 2	(2) 0.75	(2) GY	(2) 4808	(2) Direct Fuel Injector High Voltage Control Cylinder 8	(2) I	(2) —

Q18A Fuel Pressure Regulator 1 (LZ0)

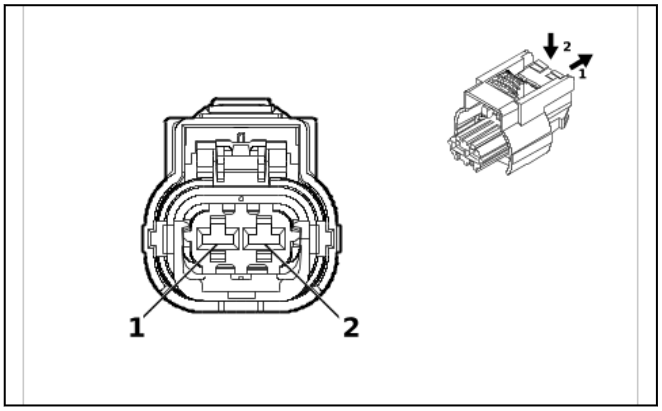

4992524

Connector Part Information

- Harness Type: Engine Wiring Harness
- OEM Connector: 35182447
- Service Connector: 84941154
- Description: 2-Way F 2.8 MCP Series, Sealed(BK)

Terminal Part Information

Terminal Type ID	Terminated Lead	Diagnostic Test Probe	Terminal Removal Tool
I	Not required	J-35616-4A (PU)	No Tool Required

Q18A Fuel Pressure Regulator 1 (LZ0)

Pin	Size	Color	Circuit	Function	Terminal Type ID	Option
(1) 1	(1) 0.75	(1) YE / VT	(1) 7245	(1) High Pressure Fuel Pump Low Enable Signal	(1) I	(1) —
(2) 2	(2) 0.75	(2) GY / BN	(2) 7244	(2) High Pressure Fuel Pump High Side Control	(2) I	(2) —

Q18B Fuel Pressure Regulator 2 (LZ0)

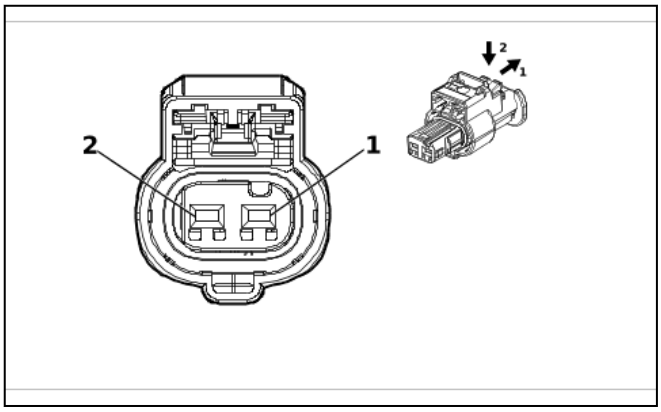

6055996

Connector Part Information
- Harness Type: Engine Wiring Harness
- OEM Connector: 5-2297795-1
- Service Connector: 85625525
- Description: 2-Way F 1.2 HPF Series, Sealed(BK)

Terminal Part Information

Terminal Type ID	Terminated Lead	Diagnostic Test Probe	Terminal Removal Tool
I	Not required	J-35616-12 (BU)	No Tool Required

Q18B Fuel Pressure Regulator 2 (LZ0)

Pin	Size	Color	Circuit	Function	Terminal Type ID	Option
(1) 1	(1) 0.5	(1) BK / YE	(1) 2834	(1) Fuel Rail Pressure Solenoid Valve Low Control	(1) I	(1) —
(2) 2	(2) 0.5	(2) BU / WH	(2) 2530	(2) Fuel Rail Pressure Solenoid Valve Control	(2) I	(2) —

Q18C Fuel Pressure Regulator 3 (LZ0)

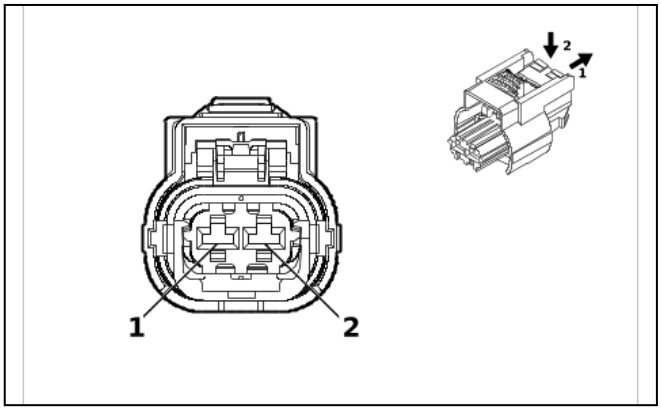

4992524

Connector Part Information
- Harness Type: Engine Wiring Harness
- OEM Connector: 35182447
- Service Connector: 84941154
- Description: 2-Way F 2.8 MCP Series, Sealed(BK)

Terminal Part Information

Terminal Type ID	Terminated Lead	Diagnostic Test Probe	Terminal Removal Tool
I	Not required	J-35616-35 (VT)	No Tool Required

Q18C Fuel Pressure Regulator 3 (LZ0)

Pin	Size	Color	Circuit	Function	Terminal Type ID	Option
(1) 1	(1) 0.75	(1) YE	(1) 2420	(1) Fuel High Pressure Pump Low Enable Signal	(1) I	(1) —
(2) 2	(2) 0.75	(2) GY	(2) 2419	(2) Fuel High Pressure Pump High Side Supply Voltage	(2) I	(2) —

Q20 Intake Airflow Control Valve (LZ0)

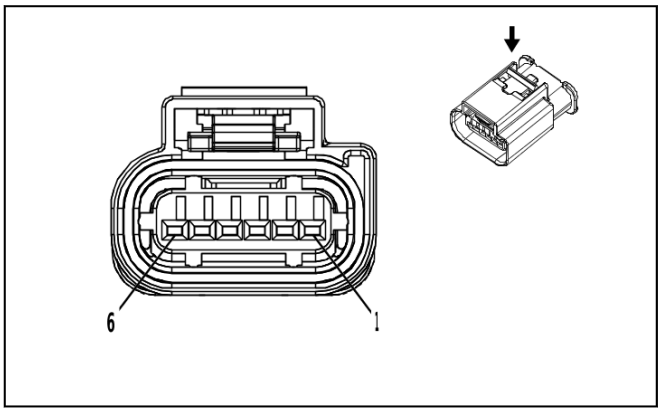

3747579

Connector Part Information

- Harness Type: Engine Wiring Harness
- OEM Connector: 2272975-5
- Service Connector: 19352911
- Description: 6-Way F 1.2 MCON Series, Sealed(BK)

Terminal Part Information

Terminal Type ID	Terminated Lead	Diagnostic Test Probe	Terminal Removal Tool
I	Not required	J-35616-12 (BU)	No Tool Required

Q20 Intake Airflow Control Valve (LZ0)

Pin	Size	Color	Circuit	Function	Terminal Type ID	Option
(1) 1	(1) 0.75	(1) YE	(1) 581	(1) Throttle Actuator Open Control	(1) I	(1) —
(2) 2	(2) 0.75	(2) BN / WH	(2) 582	(2) Throttle Actuator Close Control	(2) I	(2) —
(3) 3	(3) 0.5	(3) BU / WH	(3) 3630	(3) Throttle Position Sensor SENT 1 Signal	(3) I	(3) —
(4) 4	(4) 0.5	(4) BK / YE	(4) 548	(4) Engine Control Sensors Low Reference 1	(4) I	(4) —
(5) 5	(5) 0.5	(5) BU / RD	(5) 460	(5) Engine Control Sensors 5 Volt Reference 1	(5) I	(5) —
6	—	—	—	Not Occupied	—	—

Q22 Intake Manifold Tuning Solenoid Valve (LZ0)

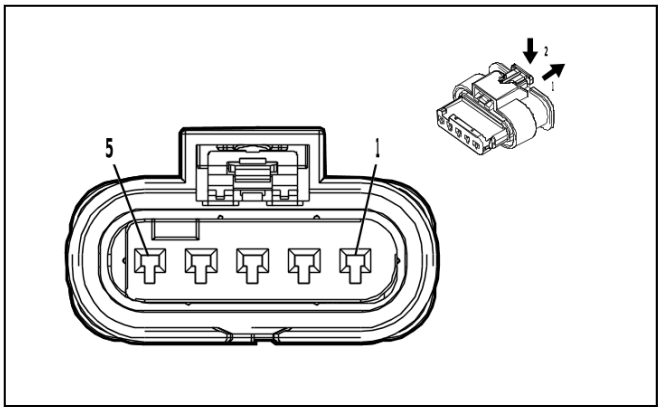

3338689

Connector Part Information

- Harness Type: Engine Wiring Harness
- OEM Connector: 1-1718806-1
- Service Connector: 19119351
- Description: 5-Way F 1.2 MCON-LL Series, Sealed(BK)

Terminal Part Information

Terminal Type ID	Terminated Lead	Diagnostic Test Probe	Terminal Removal Tool
I	Not required	J-35616-12 (BU)	No Tool Required

Q22 Intake Manifold Tuning Solenoid Valve (LZ0)

Pin	Size	Color	Circuit	Function	Terminal Type ID	Option
(1) 1	(1) 0.5	(1) BK / YE	(1) 548	(1) Engine Control Sensors Low Reference 1	(1) I	(1) —
(2) 2	(2) 0.5	(2) GN / GY	(2) 7316	(2) Intake Manifold Runner Valve Actuator Control	(2) I	(2) —
(3) 3	(3) 0.5	(3) BU / RD	(3) 460	(3) Engine Control Sensors 5 Volt Reference 1	(3) I	(3) —
(4) 4	(4) 0.75	(4) BK / BU	(4) 1408	(4) Variable Swirl Valve Close Control	(4) I	(4) —
(5) 5	(5) 0.75	(5) BK / GN	(5) 1389	(5) Variable Swirl Valve Open Control	(5) I	(5) —

Q37LFB Front Shock Absorber Actuator - Left (Z95)

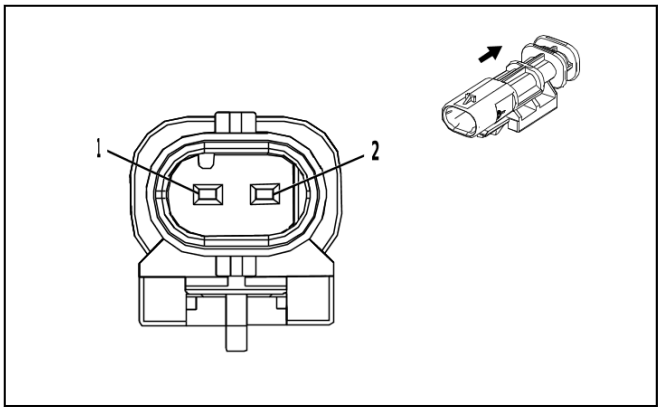

2474755

Connector Part Information
- Harness Type: Chassis Wiring Harness
- OEM Connector: 2203314-1
- Service Connector: 85533165
- Description: 2-Way M 1.2 MCON Series, Sealed(BK)

Terminal Part Information

Terminal Type ID	Terminated Lead	Diagnostic Test Probe	Terminal Removal Tool
I	Not required	J-35616-17 (L-GN)	No Tool Required

Q37LFB Front Shock Absorber Actuator - Left (Z95)

Pin	Size	Color	Circuit	Function	Terminal Type ID	Option
(1) 1	(1) 0.5	(1) BN / WH	(1) 1107	(1) Left Front Shock Absorber Actuator Control	(1) I	(1) —
(2) 2	(2) 0.5	(2) GY / BU	(2) 1113	(2) Left Front Shock Absorber Actuator Control	(2) I	(2) —

Q37LRB Rear Shock Absorber Actuator - Left (Z95)

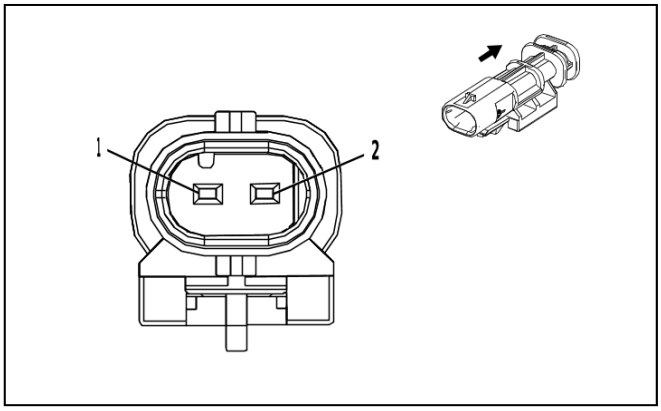

2474755

Connector Part Information
- Harness Type: Chassis Wiring Harness
- OEM Connector: 2203314-1
- Service Connector: 85533165
- Description: 2-Way M 1.2 MCON Series, Sealed(BK)

Terminal Part Information

Terminal Type ID	Terminated Lead	Diagnostic Test Probe	Terminal Removal Tool
I	Not required	J-35616-17 (L-GN)	No Tool Required

Q37LRB Rear Shock Absorber Actuator - Left (Z95)

Pin	Size	Color	Circuit	Function	Terminal Type ID	Option
(1) 1	(1) 0.5	(1) BU / GY	(1) 1114	(1) Left Rear Shock Absorber Actuator Control	(1) I	(1) —
(2) 2	(2) 0.5	(2) GN / VT	(2) 1115	(2) Left Rear Shock Absorber Actuator Control	(2) I	(2) —

Q37RFB Front Shock Absorber Actuator - Right (Z95)

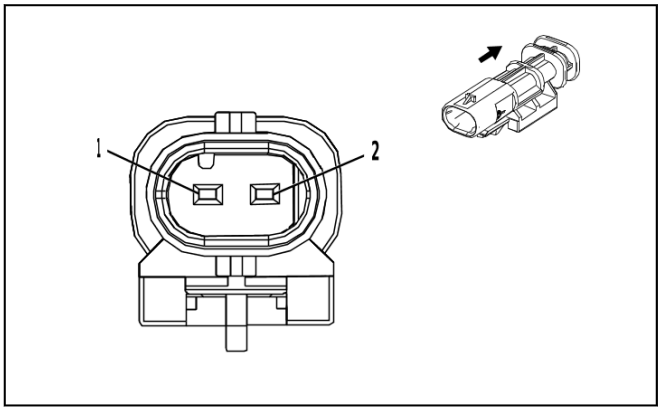

2474755

Connector Part Information

- Harness Type: Chassis Wiring Harness
- OEM Connector: 2203314-1
- Service Connector: 85533165
- Description: 2-Way M 1.2 MCON Series, Sealed(BK)

Terminal Part Information

Terminal Type ID	Terminated Lead	Diagnostic Test Probe	Terminal Removal Tool
I	Not required	J-35616-17 (L-GN)	No Tool Required

Q37RFB Front Shock Absorber Actuator - Right (Z95)

Pin	Size	Color	Circuit	Function	Terminal Type ID	Option
(1) 1	(1) 0.5	(1) BN / BU	(1) 1116	(1) Right Front Shock Absorber Actuator Control	(1) I	(1) —
(2) 2	(2) 0.5	(2) GY / WH	(2) 1117	(2) Right Front Shock Absorber Actuator Control	(2) I	(2) —

Q37RRB Rear Shock Absorber Actuator - Right (Z95)

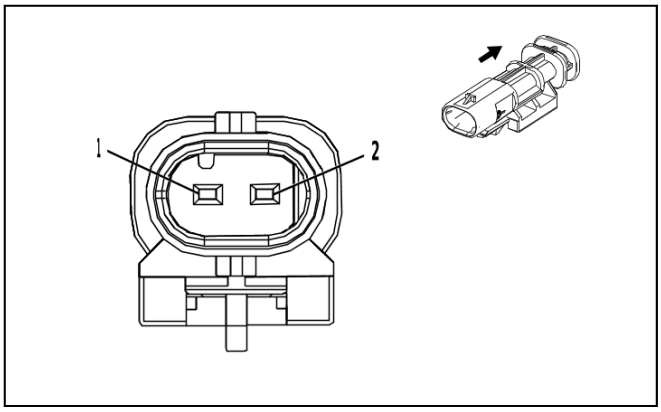

2474755

Connector Part Information
- Harness Type: Chassis Wiring Harness
- OEM Connector: 2203314-1
- Service Connector: 85533165
- Description: 2-Way M 1.2 MCON Series, Sealed(BK)

Terminal Part Information

Terminal Type ID	Terminated Lead	Diagnostic Test Probe	Terminal Removal Tool
I	Not required	J-35616-17 (L-GN)	No Tool Required

Q37RRB Rear Shock Absorber Actuator - Right (Z95)

Pin	Size	Color	Circuit	Function	Terminal Type ID	Option
(1) 1	(1) 0.5	(1) BN / GN	(1) 1118	(1) Right Rear Shock Absorber Actuator Control	(1) I	(1) —
(2) 2	(2) 0.5	(2) GN / GY	(2) 1119	(2) Right Rear Shock Absorber Actuator Control	(2) I	(2) —

Q38 Throttle Body (L84 / L87)

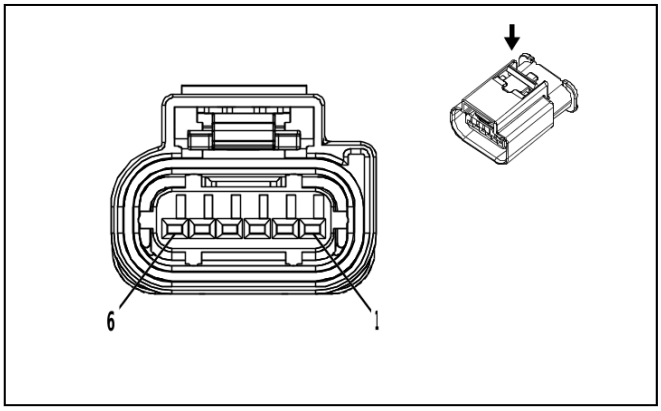

3747579

Connector Part Information
- Harness Type: Engine Wiring Harness
- OEM Connector: 2272975-5
- Service Connector: 19352911
- Description: 6-Way F 1.2 MCON Series, Sealed(BK)

Terminal Part Information

Terminal Type ID	Terminated Lead	Diagnostic Test Probe	Terminal Removal Tool
I	Not required	J-35616-12 (BU)	No Tool Required

Q38 Throttle Body (L84 / L87)

Pin	Size	Color	Circuit	Function	Terminal Type ID	Option
(1) 1	(1) 0.5	(1) YE	(1) 581	(1) Throttle Actuator Open Control	(1) I	(1) —
(2) 2	(2) 0.5	(2) BN / WH	(2) 582	(2) Throttle Actuator Close Control	(2) I	(2) —
(3) 3	(3) 0.5	(3) BU / WH	(3) 3630	(3) Throttle Position Sensor SENT 1 Signal	(3) I	(3) —
(4) 4	(4) 0.5	(4) BK / BN	(4) 2752	(4) Throttle Position Sensor Low Reference	(4) I	(4) —
(5) 5	(5) 0.5	(5) BN / RD	(5) 2701	(5) Throttle Position Sensor 5V Reference	(5) I	(5) —
6	—	—	—	Not Occupied	—	—

Q44 Engine Oil Pressure Control Solenoid Valve (L87 / LZ0)

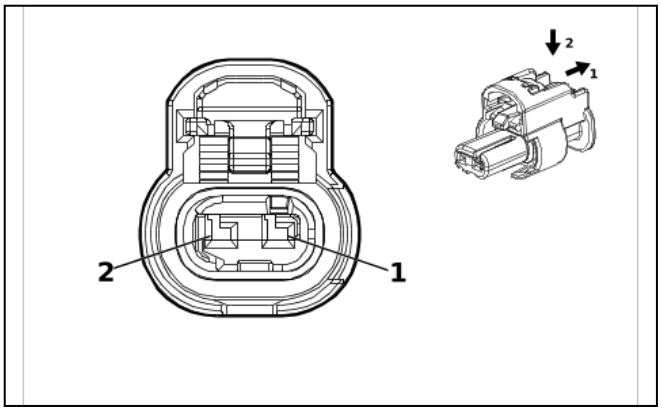

4036662

Connector Part Information

- Harness Type: Oil Pump Flow Control Solenoid Valve Harness
- OEM Connector: 1-2296704-1
- Service Connector: Service by Harness - See Part Catalog
- Description: 2-Way F 1.2 MCON-CB Series, Sealed(BK)

Terminal Part Information

Terminal Type ID	Terminated Lead	Diagnostic Test Probe	Terminal Removal Tool
I	Not required	J-35616-16 (L-GN)	No Tool Required

Q44 Engine Oil Pressure Control Solenoid Valve (L87 / LZ0)

Pin	Size	Color	Circuit	Function	Terminal Type ID	Option
(1) 1	(1) 0.5 (1) 0.5	(1) VT / BU (1) YE / BN	(1) 5293 (1) 106	(1) Powertrain Main Relay Fused Supply Voltage 4 (1) Oil Pump Motor Control	(1) I (1) I	(1) L87 (1) LZ0
(2) 2	(2) 0.5 (2) 0.5	(2) BU (2) BU	(2) 179 (2) 179	(2) Engine Oil Pump Control (2) Engine Oil Pump Control	(2) I (2) I	(2) L87 (2) LZ0

Q46 Air Conditioning Compressor Solenoid Valve

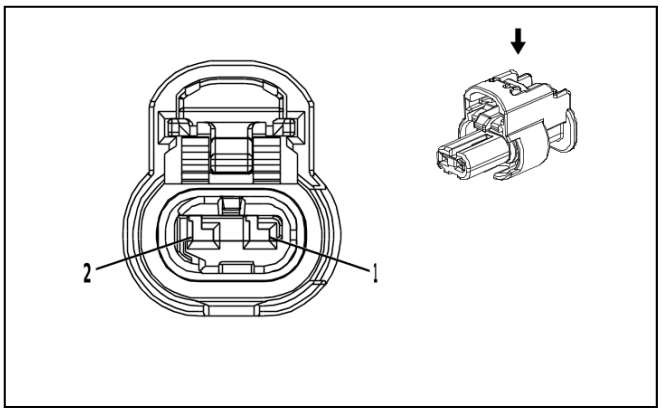

4335931

Connector Part Information
- Harness Type: Engine Wiring Harness
- OEM Connector: 1-2296694-2
- Service Connector: 19366843
- Description: 2-Way F 1.2 MCON Series, Sealed(BK)

Terminal Part Information

Terminal Type ID	Terminated Lead	Diagnostic Test Probe	Terminal Removal Tool
I	Not required	J-35616-16 (L-GN)	No Tool Required

Q46 Air Conditioning Compressor Solenoid Valve

Pin	Size	Color	Circuit	Function	Terminal Type ID	Option
(1) 1	(1) 0.5	(1) BU / YE	(1) 7574	(1) Air Conditioning Compressor Solenoid Valve Control	(1) I	(1) —
(2) 2	(2) 0.5	(2) BU / BN	(2) 7573	(2) Air Conditioning Compressor Solenoid Valve Control	(2) I	(2) —

Q61 Reductant Fluid Injector (LZ0)

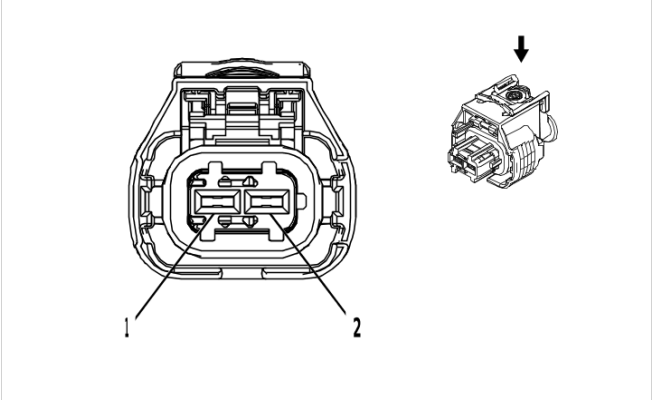

2577394

Connector Part Information
- Harness Type: Engine Wiring Harness
- OEM Connector: 1 928 405 714
- Service Connector: 13384371
- Description: 2-Way F 2.8 Series, Sealed(BK)

Terminal Part Information

Terminal Type ID	Terminated Lead	Diagnostic Test Probe	Terminal Removal Tool
I	Not required	J-35616-35 (VT)	No Tool Required

Q61 Reductant Fluid Injector (LZ0)

Pin	Size	Color	Circuit	Function	Terminal Type ID	Option
(1) 1	(1) 0.75	(1) BN / WH	(1) 3100	(1) Diesel Exhaust Fluid Dosing Valve Low Control	(1) I	(1) —
(2) 2	(2) 0.75	(2) BN	(2) 3099	(2) Diesel Exhaust Fluid Dosing Valve High Control	(2) I	(2) —

Q61B Reductant Fluid Injector 2 (LZ0)

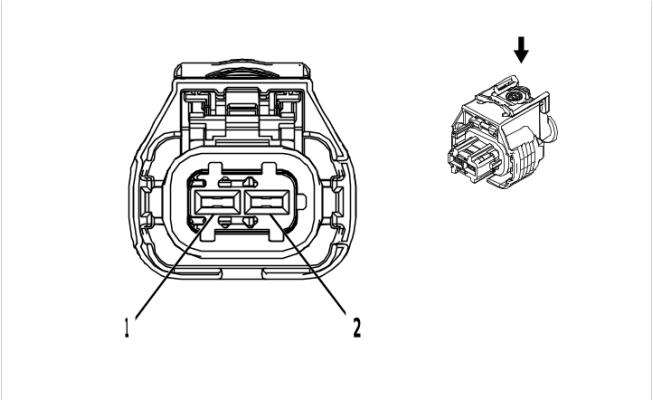

2577394

Connector Part Information

- Harness Type: Engine Wiring Harness
- OEM Connector: 1 928 405 714
- Service Connector: 13384371
- Description: 2-Way F 2.8 Series, Sealed(BK)

Terminal Part Information

Terminal Type ID	Terminated Lead	Diagnostic Test Probe	Terminal Removal Tool
I	Not required	J-35616-35 (VT)	No Tool Required

Q61B Reductant Fluid Injector 2 (LZ0)

Pin	Size	Color	Circuit	Function	Terminal Type ID	Option
(1) 1	(1) 0.75	(1) BU / YE	(1) 11616	(1) Diesel Exhaust Fluid Dosing Valve Low Control 2	(1) I	(1) —
(2) 2	(2) 0.75	(2) BU	(2) 11615	(2) Diesel Exhaust Fluid Dosing Valve High Control 2	(2) I	(2) —

Q74 Engine Coolant Bypass Valve (LZ0)

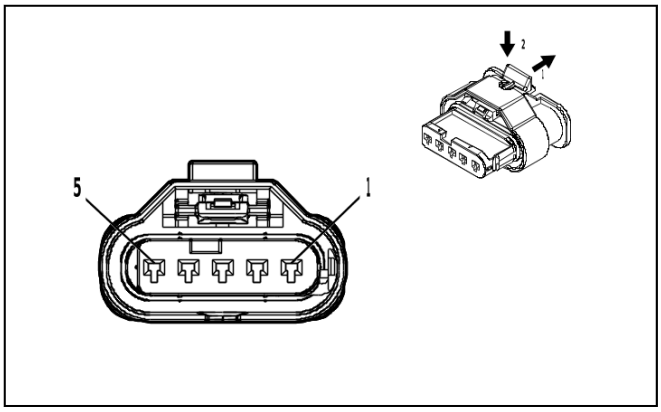

4994456

Connector Part Information

- Harness Type: Engine Wiring Harness
- OEM Connector: 2-2236898-5
- Service Connector: 19371191
- Description: 5-Way F 1.2 MCON-LL Series, Sealed(NA)

Terminal Part Information

Terminal Type ID	Terminated Lead	Diagnostic Test Probe	Terminal Removal Tool
I	Not required	J-35616-12 (BU)	No Tool Required

Q74 Engine Coolant Bypass Valve (LZ0)

Pin	Size	Color	Circuit	Function	Terminal Type ID	Option
(1) 1	(1) 0.75	(1) BU	(1) 2976	(1) Coolant Diverter Valve Actuator Control Open	(1) I	(1) —
(2) 2	(2) 0.75	(2) BU / BN	(2) 2977	(2) Coolant Diverter Valve Actuator Control Close	(2) I	(2) —
(3) 3	(3) 0.5	(3) WH / RD	(3) 480	(3) Engine Control Vehicle Sensors 5 Volt Reference 1	(3) I	(3) —
(4) 4	(4) 0.5	(4) BU / GY	(4) 2978	(4) Coolant Diverter Valve Position Signal	(4) I	(4) —
(5) 5	(5) 0.5	(5) BK / GN	(5) 580	(5) Engine Control Sensors Low Reference 2	(5) I	(5) —

Q77A Transmission Control Solenoid Valve 1

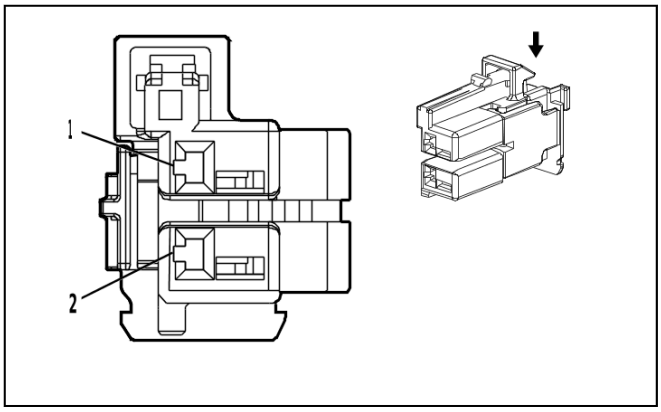

4672650

Connector Part Information
- Harness Type: Automatic Transmission Wiring Harness
- OEM Connector: 2289523-1
- Service Connector: Service by Harness - See Part Catalog
- Description: 2-Way F 1.2 MCON Series(BN)

Terminal Part Information

Terminal Type ID	Terminated Lead	Diagnostic Test Probe	Terminal Removal Tool
I	Not required	J-35616-12 (BU)	No Tool Required

Q77A Transmission Control Solenoid Valve 1

Pin	Size	Color	Circuit	Function	Terminal Type ID	Option
(1) 1	(1) 0.5	(1) WH	(1) 6388	(1) Transmission High Side Driver 2 Control	(1) I	(1) —
(2) 2	(2) 0.5	(2) BU / GN	(2) 6404	(2) Clutch Solenoid Valve E Control	(2) I	(2) —

Q77B Transmission Control Solenoid Valve 2

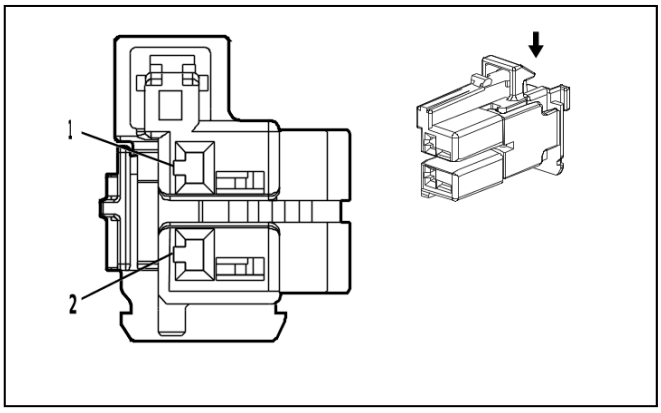

4672650

Connector Part Information
- Harness Type: Automatic Transmission Wiring Harness
- OEM Connector: 2289523-1
- Service Connector: Service by Harness - See Part Catalog
- Description: 2-Way F 1.2 MCON Series(BN)

Terminal Part Information

Terminal Type ID	Terminated Lead	Diagnostic Test Probe	Terminal Removal Tool
I	Not required	J-35616-12 (BU)	No Tool Required

Q77B Transmission Control Solenoid Valve 2

Pin	Size	Color	Circuit	Function	Terminal Type ID	Option
(1) 1	(1) 0.5	(1) WH	(1) 6388	(1) Transmission High Side Driver 2 Control	(1) I	(1) —
(2) 2	(2) 0.5	(2) GN / BN	(2) 6403	(2) Clutch Solenoid Valve D Control	(2) I	(2) —

Q77C Transmission Control Solenoid Valve 3

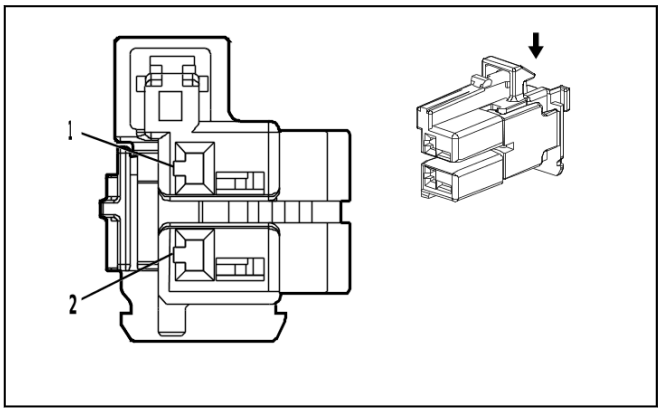

4672650

Connector Part Information

- Harness Type: Automatic Transmission Wiring Harness
- OEM Connector: 2289523-1
- Service Connector: Service by Harness - See Part Catalog
- Description: 2-Way F 1.2 MCON Series(BN)

Terminal Part Information

Terminal Type ID	Terminated Lead	Diagnostic Test Probe	Terminal Removal Tool
I	Not required	J-35616-12 (BU)	No Tool Required

Q77C Transmission Control Solenoid Valve 3

Pin	Size	Color	Circuit	Function	Terminal Type ID	Option
(1) 1	(1) 0.5	(1) WH	(1) 6388	(1) Transmission High Side Driver 2 Control	(1) I	(1) —
(2) 2	(2) 0.5	(2) GY	(2) 6402	(2) Clutch Solenoid Valve C Control	(2) I	(2) —

Q77D Transmission Control Solenoid Valve 4

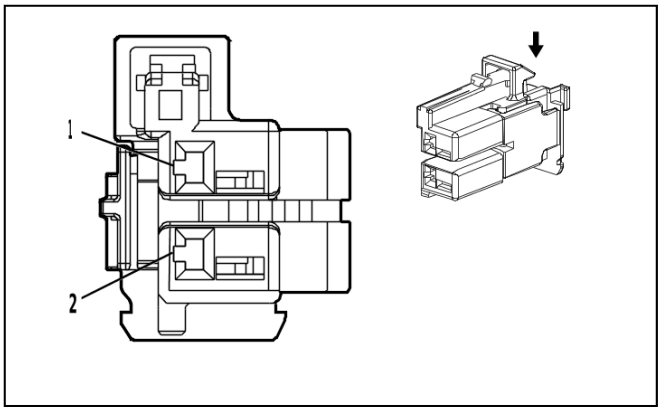

4672650

Connector Part Information
- Harness Type: Automatic Transmission Wiring Harness
- OEM Connector: 2289523-1
- Service Connector: Service by Harness - See Part Catalog
- Description: 2-Way F 1.2 MCON Series(BN)

Terminal Part Information

Terminal Type ID	Terminated Lead	Diagnostic Test Probe	Terminal Removal Tool
I	Not required	J-35616-12 (BU)	No Tool Required

Q77D Transmission Control Solenoid Valve 4

Pin	Size	Color	Circuit	Function	Terminal Type ID	Option
(1) 1	(1) 0.5	(1) WH	(1) 6388	(1) Transmission High Side Driver 2 Control	(1) I	(1) —
(2) 2	(2) 0.5	(2) BN / WH	(2) 4509	(2) Transmission Clutch F Control	(2) I	(2) —

Q77E Transmission Control Solenoid Valve 5

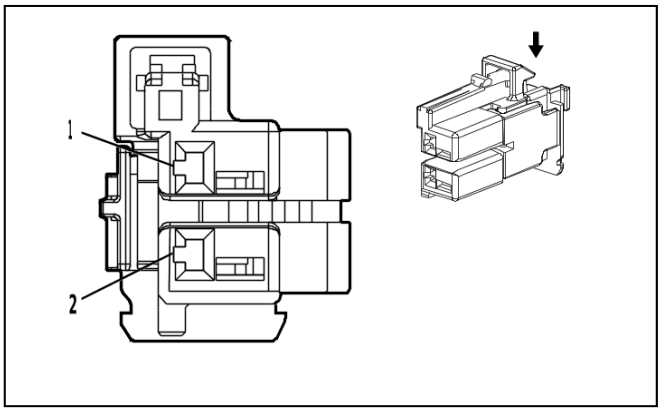

4672650

Connector Part Information
- Harness Type: Automatic Transmission Wiring Harness
- OEM Connector: 2289523-1
- Service Connector: Service by Harness - See Part Catalog
- Description: 2-Way F 1.2 MCON Series(BN)

Terminal Part Information

Terminal Type ID	Terminated Lead	Diagnostic Test Probe	Terminal Removal Tool
I	Not required	J-35616-12 (BU)	No Tool Required

Q77E Transmission Control Solenoid Valve 5

Pin	Size	Color	Circuit	Function	Terminal Type ID	Option
(1) 1	(1) 0.5	(1) WH	(1) 6388	(1) Transmission High Side Driver 2 Control	(1) I	(1) —
(2) 2	(2) 0.5	(2) YE / VT	(2) 4507	(2) Transmission Clutch H Control	(2) I	(2) —

Q77F Transmission Control Solenoid Valve 6

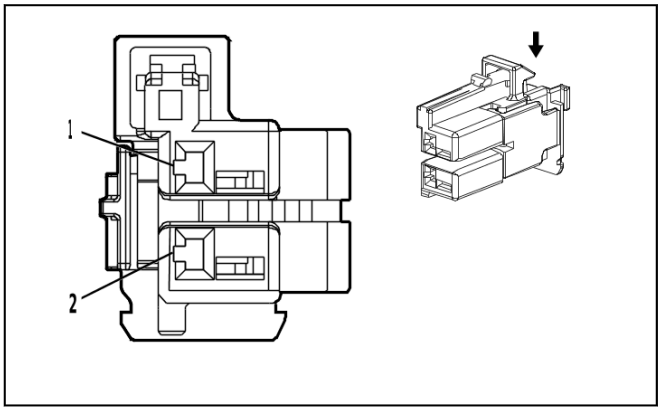

4672650

Connector Part Information

- Harness Type: Automatic Transmission Wiring Harness
- OEM Connector: 2289523-1
- Service Connector: Service by Harness - See Part Catalog
- Description: 2-Way F 1.2 MCON Series(BN)

Terminal Part Information

Terminal Type ID	Terminated Lead	Diagnostic Test Probe	Terminal Removal Tool
I	Not required	J-35616-12 (BU)	No Tool Required

Q77F Transmission Control Solenoid Valve 6

Pin	Size	Color	Circuit	Function	Terminal Type ID	Option
(1) 1	(1) 0.5	(1) WH	(1) 6388	(1) Transmission High Side Driver 2 Control	(1) I	(1) —
(2) 2	(2) 0.5	(2) BU / GY	(2) 4508	(2) Transmission Clutch G Control	(2) I	(2) —

Q77G Transmission Control Solenoid Valve 7

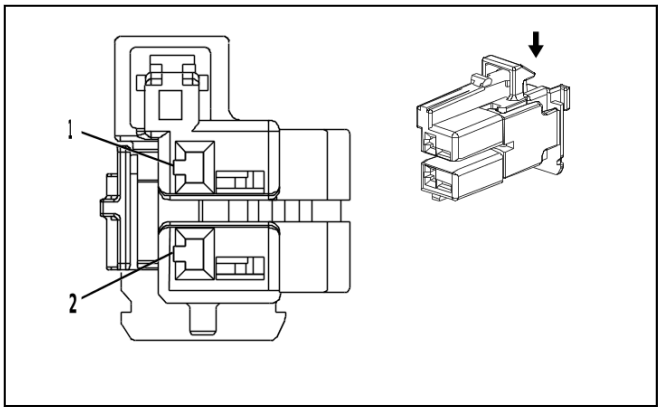

4364736

Connector Part Information
- Harness Type: Automatic Transmission Wiring Harness
- OEM Connector: 2289523-2
- Service Connector: Service by Harness - See Part Catalog
- Description: 2-Way F 1.2 MCON Series(BU)

Terminal Part Information

Terminal Type ID	Terminated Lead	Diagnostic Test Probe	Terminal Removal Tool
I	Not required	J-35616-12 (BU)	No Tool Required

Q77G Transmission Control Solenoid Valve 7

Pin	Size	Color	Circuit	Function	Terminal Type ID	Option
(1) 1	(1) 0.5	(1) BN	(1) 6387	(1) Transmission High Side Driver 1 Control	(1) I	(1) —
(2) 2	(2) 0.5	(2) GN / OG	(2) 1530	(2) Transmission Line Pressure Control Solenoid Valve Control	(2) I	(2) —

Q77H Transmission Control Solenoid Valve 8

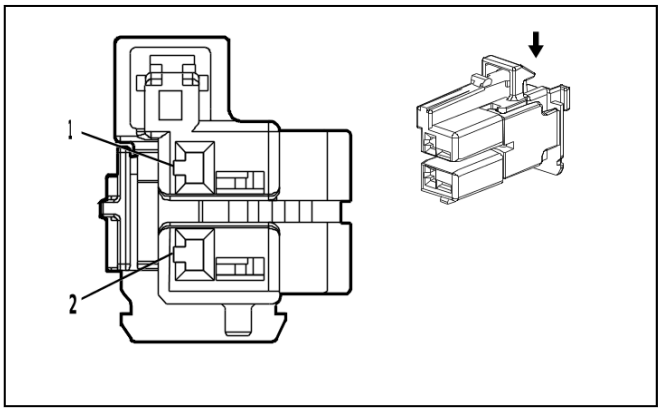

4672683

Connector Part Information
- Harness Type: Automatic Transmission Wiring Harness
- OEM Connector: 2289523-3
- Service Connector: Service by Harness - See Part Catalog
- Description: 2-Way F 1.2 MCON Series(GN)

Terminal Part Information

Terminal Type ID	Terminated Lead	Diagnostic Test Probe	Terminal Removal Tool
I	Not required	J-35616-12 (BU)	No Tool Required

Q77H Transmission Control Solenoid Valve 8

Pin	Size	Color	Circuit	Function	Terminal Type ID	Option
(1) 1	(1) 0.5	(1) BN	(1) 6387	(1) Transmission High Side Driver 1 Control	(1) I	(1) —
(2) 2	(2) 0.5	(2) GY / BN	(2) 422	(2) Torque Converter Clutch Solenoid Valve Control	(2) I	(2) —

Q77J Transmission Control Solenoid Valve 9

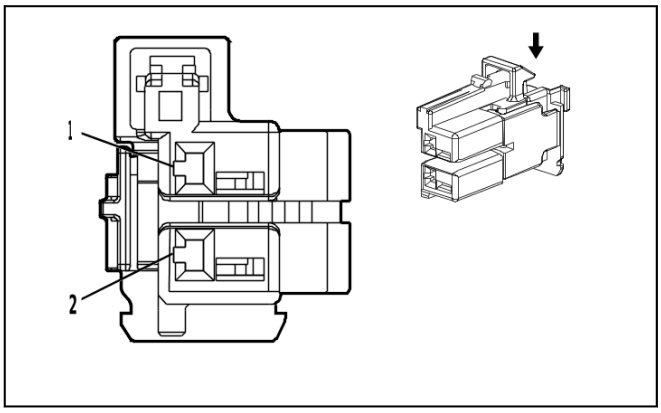

4672650

Connector Part Information

- Harness Type: Automatic Transmission Wiring Harness
- OEM Connector: 2289523-1
- Service Connector: Service by Harness - See Part Catalog
- Description: 2-Way F 1.2 MCON Series(BN)

Terminal Part Information

Terminal Type ID	Terminated Lead	Diagnostic Test Probe	Terminal Removal Tool
I	Not required	J-35616-12 (BU)	No Tool Required

Q77J Transmission Control Solenoid Valve 9

Pin	Size	Color	Circuit	Function	Terminal Type ID	Option
(1) 1	(1) 0.5	(1) WH	(1) 6388	(1) Transmission High Side Driver 2 Control	(1) I	(1) —
(2) 2	(2) 0.5	(2) VT	(2) 7819	(2) Default Disable Solenoid Control	(2) I	(2) —

Q83AA Valve Lifter Oil Solenoid Valve - Cylinder 1 (L84 / L87)

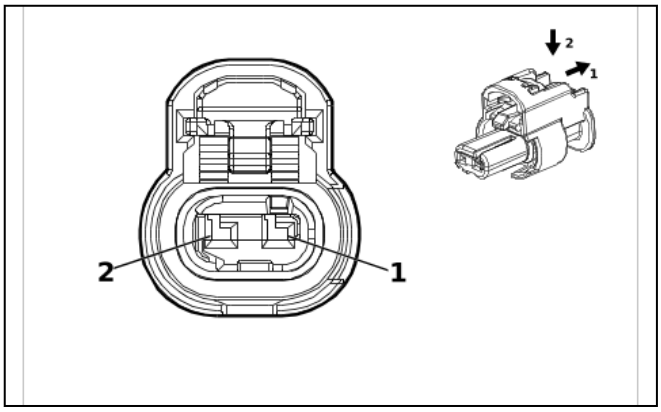

4036662

Connector Part Information
- Harness Type: Valve Rocker Arm Oil Control Valve Harness
- OEM Connector: 1-2296704-1
- Service Connector: Service by Harness - See Part Catalog
- Description: 2-Way F 1.2 MCON-CB Series, Sealed(BK)

Terminal Part Information

Terminal Type ID	Terminated Lead	Diagnostic Test Probe	Terminal Removal Tool
I	Not required	J-35616-16 (L-GN)	No Tool Required

Q83AA Valve Lifter Oil Solenoid Valve - Cylinder 1 (L84 / L87)

Pin	Size	Color	Circuit	Function	Terminal Type ID	Option
(1) 1	(1) 0.5	(1) WH / BU	(1) 2491	(1) Cylinder Shutoff Solenoid Enable Signal 1	(1) I	(1) —
(2) 2	(2) 0.5	(2) BU	(2) 5491	(2) Cylinder Deactivation Solenoid Valve Control 1	(2) I	(2) —

Q83AB Valve Lifter Oil Solenoid Valve - Cylinder 2 (L84 / L87)

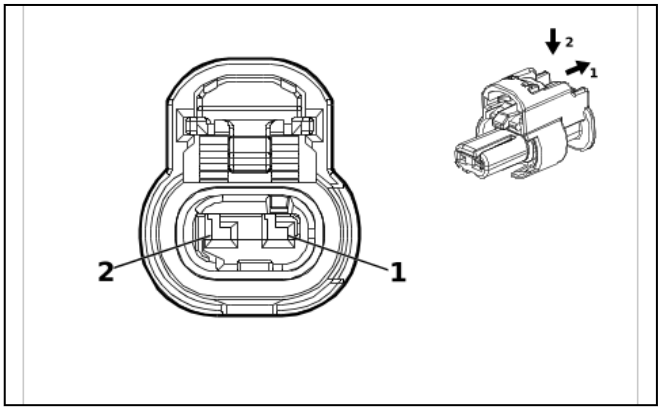

4036662

Connector Part Information
- Harness Type: Valve Rocker Arm Oil Control Valve Harness
- OEM Connector: 1-2296704-1
- Service Connector: Service by Harness - See Part Catalog
- Description: 2-Way F 1.2 MCON-CB Series, Sealed(BK)

Terminal Part Information

Terminal Type ID	Terminated Lead	Diagnostic Test Probe	Terminal Removal Tool
I	Not required	J-35616-16 (L-GN)	No Tool Required

Q83AB Valve Lifter Oil Solenoid Valve - Cylinder 2 (L84 / L87)

Pin	Size	Color	Circuit	Function	Terminal Type ID	Option
(1) 1	(1) 0.5	(1) WH / GN	(1) 2492	(1) Cylinder Shutoff Solenoid Enable Signal 2	(1) I	(1) —
(2) 2	(2) 0.5	(2) GN	(2) 5492	(2) Cylinder Deactivation Solenoid Valve Control 2	(2) I	(2) —

Q83AC Valve Lifter Oil Solenoid Valve - Cylinder 3 (L84 / L87)

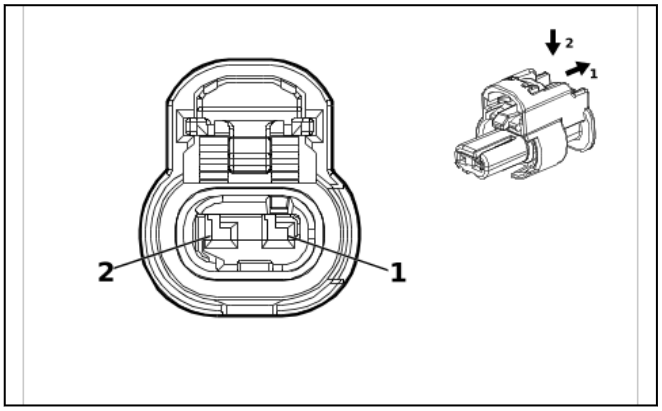

4036662

Connector Part Information

- Harness Type: Valve Rocker Arm Oil Control Valve Harness
- OEM Connector: 1-2296704-1
- Service Connector: Service by Harness - See Part Catalog
- Description: 2-Way F 1.2 MCON-CB Series, Sealed(BK)

Terminal Part Information

Terminal Type ID	Terminated Lead	Diagnostic Test Probe	Terminal Removal Tool
I	Not required	J-35616-16 (L-GN)	No Tool Required

Q83AC Valve Lifter Oil Solenoid Valve - Cylinder 3 (L84 / L87)

Pin	Size	Color	Circuit	Function	Terminal Type ID	Option
(1) 1	(1) 0.5	(1) YE / GY	(1) 2493	(1) Cylinder Shutoff Solenoid Enable Signal 3	(1) I	(1) —
(2) 2	(2) 0.5	(2) GY	(2) 5493	(2) Cylinder Deactivation Solenoid Valve Control 3	(2) I	(2) —

Q83AD Valve Lifter Oil Solenoid Valve - Cylinder 4 (L84 / L87)

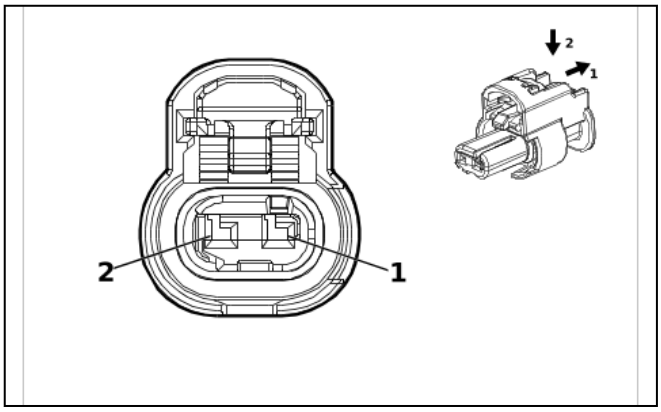

4036662

Connector Part Information
- Harness Type: Valve Rocker Arm Oil Control Valve Harness
- OEM Connector: 1-2296704-1
- Service Connector: Service by Harness - See Part Catalog
- Description: 2-Way F 1.2 MCON-CB Series, Sealed(BK)

Terminal Part Information

Terminal Type ID	Terminated Lead	Diagnostic Test Probe	Terminal Removal Tool
I	Not required	J-35616-16 (L-GN)	No Tool Required

Q83AD Valve Lifter Oil Solenoid Valve - Cylinder 4 (L84 / L87)

Pin	Size	Color	Circuit	Function	Terminal Type ID	Option
(1) 1	(1) 0.5	(1) YE / GN	(1) 2494	(1) Cylinder Shutoff Solenoid Enable Signal 4	(1) I	(1) —
(2) 2	(2) 0.5	(2) YE / BU	(2) 5494	(2) Cylinder Deactivation Solenoid Valve Control 4	(2) I	(2) —

Q83AE Valve Lifter Oil Solenoid Valve - Cylinder 5 (L84 / L87)

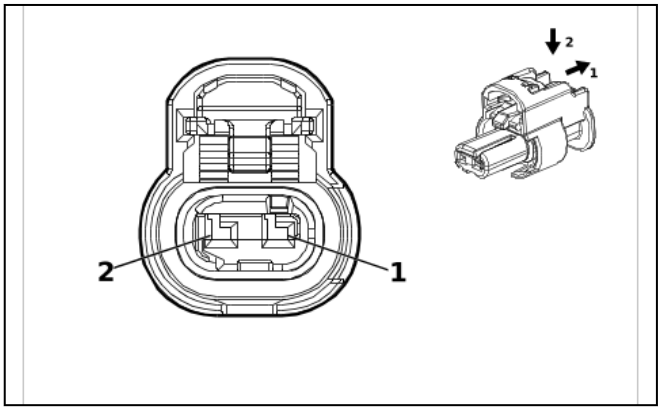

4036662

Connector Part Information
- Harness Type: Valve Rocker Arm Oil Control Valve Harness
- OEM Connector: 1-2296704-1
- Service Connector: Service by Harness - See Part Catalog
- Description: 2-Way F 1.2 MCON-CB Series, Sealed(BK)

Terminal Part Information

Terminal Type ID	Terminated Lead	Diagnostic Test Probe	Terminal Removal Tool
I	Not required	J-35616-16 (L-GN)	No Tool Required

Q83AE Valve Lifter Oil Solenoid Valve - Cylinder 5 (L84 / L87)

Pin	Size	Color	Circuit	Function	Terminal Type ID	Option
(1) 1	(1) 0.5	(1) WH / VT	(1) 2495	(1) Cylinder Shutoff Solenoid Enable Signal 5	(1) I	(1) —
(2) 2	(2) 0.5	(2) VT	(2) 5495	(2) Cylinder Deactivation Solenoid Valve Control 5	(2) I	(2) —

Q83AF Valve Lifter Oil Solenoid Valve - Cylinder 6 (L84 / L87)

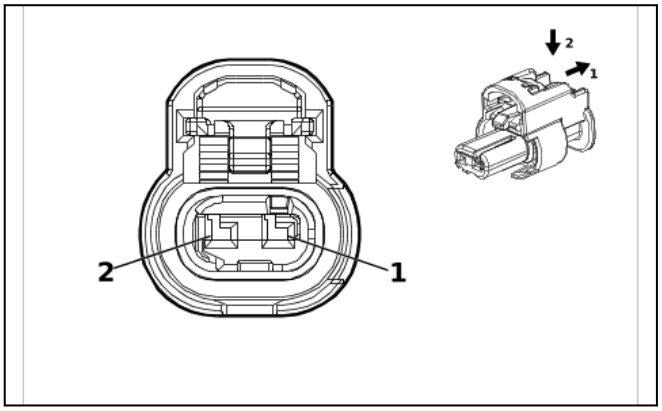

4036662

Connector Part Information

- Harness Type: Valve Rocker Arm Oil Control Valve Harness
- OEM Connector: 1-2296704-1
- Service Connector: Service by Harness - See Part Catalog
- Description: 2-Way F 1.2 MCON-CB Series, Sealed(BK)

Terminal Part Information

Terminal Type ID	Terminated Lead	Diagnostic Test Probe	Terminal Removal Tool
I	Not required	J-35616-16 (L-GN)	No Tool Required

Q83AF Valve Lifter Oil Solenoid Valve - Cylinder 6 (L84 / L87)

Pin	Size	Color	Circuit	Function	Terminal Type ID	Option
(1) 1	(1) 0.5	(1) YE / BN	(1) 2496	(1) Cylinder Shutoff Solenoid Enable Signal 6	(1) I	(1) —
(2) 2	(2) 0.5	(2) BN	(2) 5496	(2) Cylinder Deactivation Solenoid Valve Control 6	(2) I	(2) —

Q83AG Valve Lifter Oil Solenoid Valve - Cylinder 7 (L84 / L87)

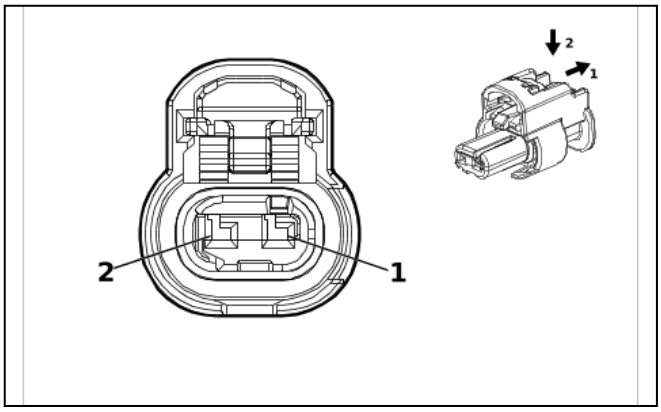

4036662

Connector Part Information
- Harness Type: Valve Rocker Arm Oil Control Valve Harness
- OEM Connector: 1-2296704-1
- Service Connector: Service by Harness - See Part Catalog
- Description: 2-Way F 1.2 MCON-CB Series, Sealed(BK)

Terminal Part Information

Terminal Type ID	Terminated Lead	Diagnostic Test Probe	Terminal Removal Tool
I	Not required	J-35616-16 (L-GN)	No Tool Required

Q83AG Valve Lifter Oil Solenoid Valve - Cylinder 7 (L84 / L87)

Pin	Size	Color	Circuit	Function	Terminal Type ID	Option
(1) 1	(1) 0.5	(1) GN / GY	(1) 2497	(1) Cylinder Shutoff Solenoid Enable Signal 7	(1) I	(1) —
(2) 2	(2) 0.5	(2) WH	(2) 5497	(2) Cylinder Deactivation Solenoid Valve Control 7	(2) I	(2) —

Q83AH Valve Lifter Oil Solenoid Valve - Cylinder 8 (L84 / L87)

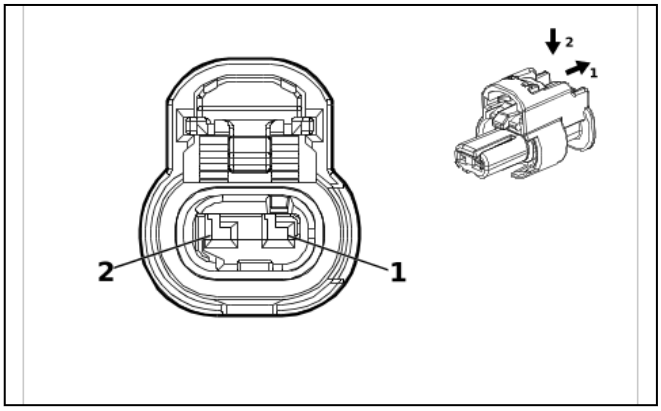

4036662

Connector Part Information
- Harness Type: Valve Rocker Arm Oil Control Valve Harness
- OEM Connector: 1-2296704-1
- Service Connector: Service by Harness - See Part Catalog
- Description: 2-Way F 1.2 MCON-CB Series, Sealed(BK)

Terminal Part Information

Terminal Type ID	Terminated Lead	Diagnostic Test Probe	Terminal Removal Tool
I	Not required	J-35616-16 (L-GN)	No Tool Required

Q83AH Valve Lifter Oil Solenoid Valve - Cylinder 8 (L84 / L87)

Pin	Size	Color	Circuit	Function	Terminal Type ID	Option
(1) 1	(1) 0.5	(1) WH / YE	(1) 2498	(1) Cylinder Shutoff Solenoid Enable Signal 8	(1) I	(1) —
(2) 2	(2) 0.5	(2) YE	(2) 5498	(2) Cylinder Deactivation Solenoid Valve Control 8	(2) I	(2) —

Q97M Engine Coolant Flow Control Valve - Main (LZ0)

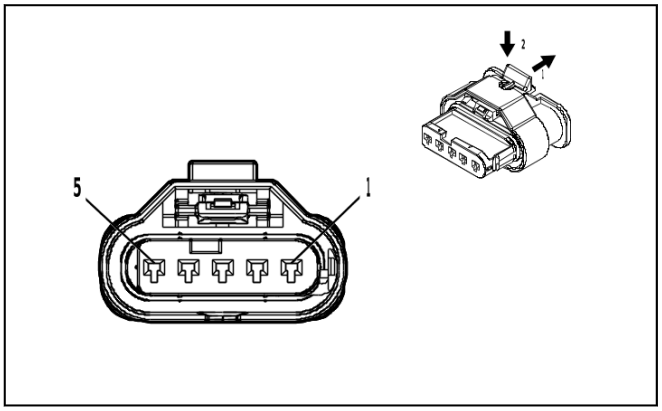

4994456

Connector Part Information

- Harness Type: Engine Wiring Harness
- OEM Connector: 2-2236898-5
- Service Connector: 19371191
- Description: 5-Way F 1.2 MCON-LL Series, Sealed(NA)

Terminal Part Information

Terminal Type ID	Terminated Lead	Diagnostic Test Probe	Terminal Removal Tool
I	Not required	J-35616-12 (BU)	No Tool Required

Q97M Engine Coolant Flow Control Valve - Main (LZ0)

Pin	Size	Color	Circuit	Function	Terminal Type ID	Option
(1) 1	(1) 0.75	(1) GY / BN	(1) 2972	(1) Coolant Flow Control Actuator Control Close	(1) I	(1) —
(2) 2	(2) 0.75	(2) GY / BU	(2) 2971	(2) Coolant Flow Control Actuator Control Open	(2) I	(2) —
(3) 3	(3) 0.5	(3) BU / RD	(3) 460	(3) Engine Control Sensors 5 Volt Reference 1	(3) I	(3) —
(4) 4	(4) 0.5	(4) GY	(4) 2973	(4) Coolant Flow Control Valve Position Signal	(4) I	(4) —
(5) 5	(5) 0.5	(5) BK / YE	(5) 548	(5) Engine Control Sensors Low Reference 1	(5) I	(5) —

R6AD Terminating Resistor - High Speed CAN Bus 4 (- (UKI / UKW))

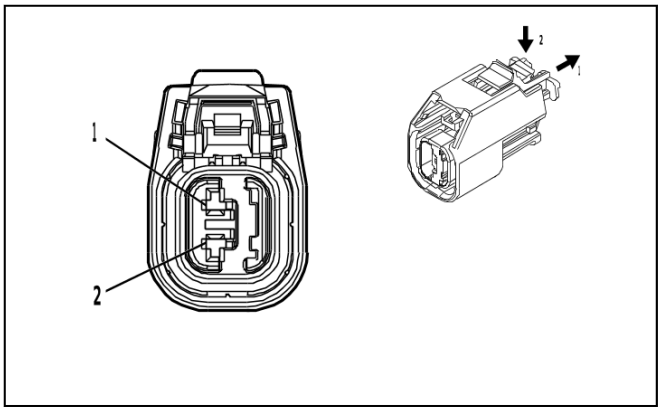

4889830

Connector Part Information
- Harness Type: Body Wiring Harness
- OEM Connector: 33164011
- Service Connector: 86802964
- Description: 2-Way F 1.5 OCS Series, Sealed(BK)

Terminal Part Information

Terminal Type ID	Terminated Lead	Diagnostic Test Probe	Terminal Removal Tool
I	Not required	J-35616-14 (GN)	No Tool Required

R6AD Terminating Resistor - High Speed CAN Bus 4 (- (UKI / UKW))

Pin	Size	Color	Circuit	Function	Terminal Type ID	Option
(1) 1	(1) 0.5	(1) WH	(1) 4100	(1) AUTOSAR CAN Bus [-] 4 Serial Data	(1) I	(1) —
(2) 2	(2) 0.5	(2) BU / VT	(2) 4101	(2) AUTOSAR CAN Bus [+] 4 Serial Data	(2) I	(2) —

R29 Fuel Filter (LZ0)

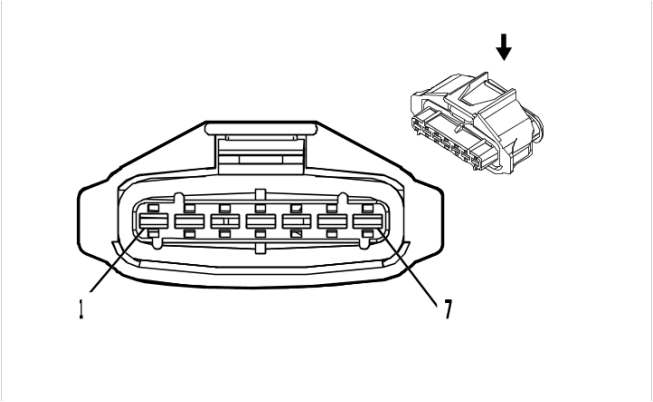

2537256

Connector Part Information
- Harness Type: Chassis Wiring Harness
- OEM Connector: 1928403222
- Service Connector: 19354080
- Description: 7-Way F 2.8 Junior Power Timer Series, Sealed(BK)

Terminal Part Information

Terminal Type ID	Terminated Lead	Diagnostic Test Probe	Terminal Removal Tool
I	Not required	J-35616-35 (VT)	No Tool Required

R29 Fuel Filter (LZ0)

Pin	Size	Color	Circuit	Function	Terminal Type ID	Option
(1) 1	(1) 2.5	(1) BK	(1) 1950	(1) Ground	(1) I	(1) —
(2) 2	(2) 2.5	(2) BN / YE	(2) 2996	(2) Fuel Heater Control 1	(2) I	(2) —
(3) 3	(3) 0.75	(3) VT / GN	(3) 4320	(3) Powertrain Sensor Bus Enable	(3) I	(3) —
(4) 4	(4) 0.5	(4) BK / BU	(4) 6863	(4) Water In Fuel Sensor Low Reference	(4) I	(4) —
(5) 5	(5) 0.5	(5) BU / YE	(5) 6861	(5) Water In Fuel Sensor Signal	(5) I	(5) —
(6) 6	(6) 0.5	(6) BN / GY	(6) 7072	(6) Fuel Temperature Sensor 1 Signal	(6) I	(6) —
(7) 7	(7) 0.5	(7) BN / WH	(7) 7073	(7) Fuel Temperature Sensor 1 Low Reference	(7) I	(7) —

R44 Radio AM Antenna Signal Filter Module - Center High Mounted Stop Lamp X1

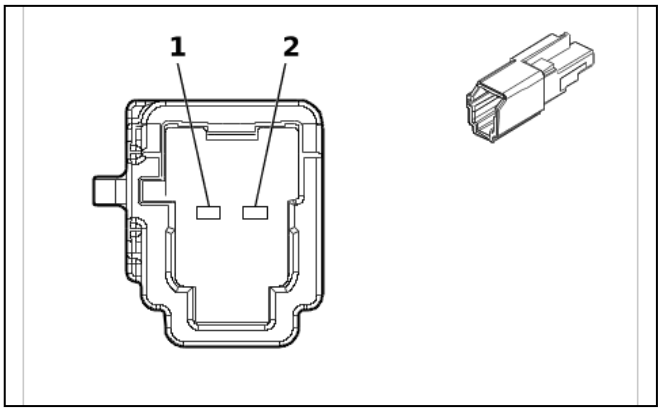

6529124

Connector Part Information

- Harness Type: Body Wiring Harness
- OEM Connector: 6099-0610
- Service Connector: 85725003
- Description: 2-Way M 1.2 MBS Series(BK)

Terminal Part Information

Terminal Type ID	Terminated Lead	Diagnostic Test Probe	Terminal Removal Tool
I	Not required	J-35616-17 (L-GN)	No Tool Required

R44 Radio AM Antenna Signal Filter Module - Center High Mounted Stop Lamp X1

Pin	Size	Color	Circuit	Function	Terminal Type ID	Option
(1) 1	(1) 0.5	(1) BK	(1) 2050	(1) Ground	(1) I	(1) —
(2) 2	(2) 0.5	(2) BN / YE	(2) 820	(2) Center High Mounted Stop Lamp Supply Voltage	(2) I	(2) —

R44 Radio AM Antenna Signal Filter Module - Center High Mounted Stop Lamp X2

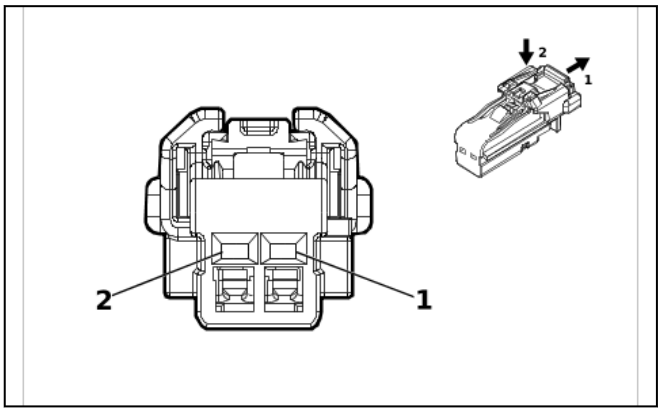

4115691

Connector Part Information

- Harness Type: Radio AM Antenna Signal Filter Module - Center High Mounted Stop Lamp
- OEM Connector: 13532422
- Service Connector: Service by Harness - See Part Catalog
- Description: 2-Way F 1.2 MCON Series(BK)

Terminal Part Information

Terminal Type ID	Terminated Lead	Diagnostic Test Probe	Terminal Removal Tool
I	Not required	No Tool Required	No Tool Required

R44 Radio AM Antenna Signal Filter Module - Center High Mounted Stop Lamp X2

Pin	Size	Color	Circuit	Function	Terminal Type ID	Option
(1) 1	(1) —	(1) BK	(1) 8350	(1) Antenna Filter Ground	(1) I	(1) —
(2) 2	(2) —	(2) BN / YE	(2) 820	(2) Center High Mounted Stop Lamp Supply Voltage	(2) I	(2) —

S3B Automatic Transmission Electronic Control

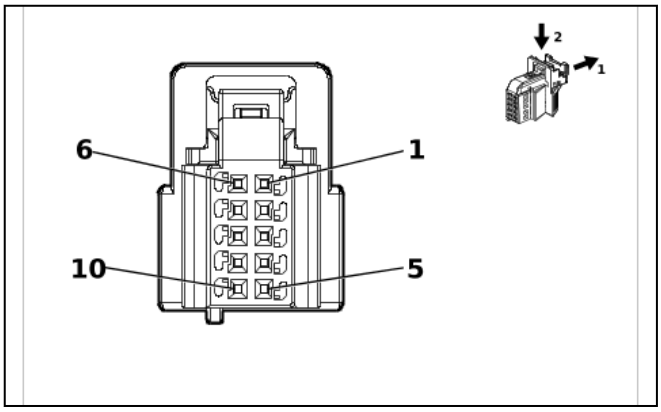

5837272

Connector Part Information

- Harness Type: Instrument Panel Wiring Harness
- OEM Connector: 2310000-2
- Service Connector: 13518418
- Description: 10-Way F 0.64 MQS Series(GY)

Terminal Part Information

Terminal Type ID	Terminated Lead	Diagnostic Test Probe	Terminal Removal Tool
I	19300632	J-35616-64B (L-BU)	J-38125-215A

S3B Automatic Transmission Electronic Control

Pin	Size	Color	Circuit	Function	Terminal Type ID	Option
(1) 1	(1) 0.35	(1) RD / GN	(1) 5140	(1) Battery Positive Voltage	(1) I	(1) —
(2) 2	(2) 0.35	(2) WH / RD	(2) 480	(2) Engine Control Vehicle Sensors 5 Volt Reference 1	(2) I	(2) —
(3) 3	(3) 0.35	(3) BK / GN	(3) 580	(3) Engine Control Sensors Low Reference 2	(3) I	(3) —
(4) 4	(4) 0.35	(4) BK / YE	(4) 548	(4) Engine Control Sensors Low Reference 1	(4) I	(4) —
(5) 5	(5) 0.35	(5) BN	(5) 10515	(5) Electronic Transmission Range Select Shifter Position Sensor 1 Signal	(5) I	(5) —
(6) 6	(6) 0.35	(6) GN / WH	(6) 4622	(6) Engine Control Module LIN Bus 2	(6) I	(6) —
7	—	—	—	Not Occupied	—	—
(8) 8	(8) 0.35	(8) GY	(8) 10518	(8) Electronic Transmission Range Select Shifter Position Sensor 2 Signal	(8) I	(8) —
(9) 9	(9) 0.35	(9) BK / WH	(9) 1851	(9) Signal Ground	(9) I	(9) —
(10) 10	(10) 0.35	(10) BU / RD	(10) 460	(10) Engine Control Sensors 5 Volt Reference 1	(10) I	(10) —

S13D Door Lock Switch - Driver (- (A45 / AUN))

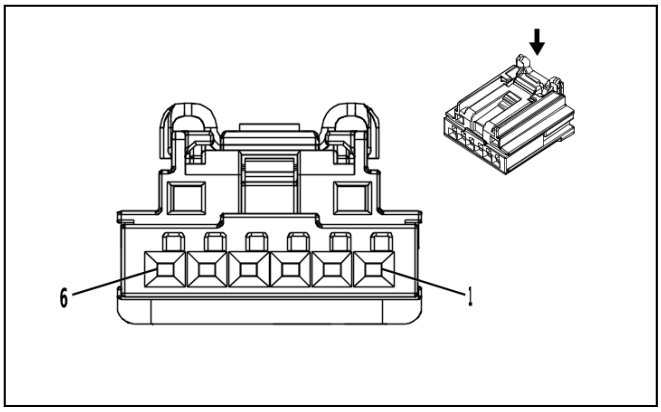

4145138

Connector Part Information

- Harness Type: Front Side Door Door Lock Door Wiring Harness - Driver
- OEM Connector: 2035363-2
- Service Connector: Service by Harness - See Part Catalog
- Description: 6-Way F 0.64 Generation Y Series(BK)

Terminal Part Information

Terminal Type ID	Terminated Lead	Diagnostic Test Probe	Terminal Removal Tool
I	Not required	J-35616-64B (L-BU)	No Tool Required

S13D Door Lock Switch - Driver (- (A45 / AUN))

Pin	Size	Color	Circuit	Function	Terminal Type ID	Option
(1) 1	(1) 0.35	(1) BN / GY	(1) 4784	(1) Left Front Door LED Backlight Dimming Control	(1) I	(1) —
(2) 2	(2) 0.35	(2) VT / YE	(2) 4244	(2) Left Front Door Lock Indicator Control	(2) I	(2) —
(3) 3	(3) 0.35	(3) BN / YE	(3) 2771	(3) Left Front Door Lock Switch Lock Signal	(3) I	(3) —
(4) 4	(4) 0.35	(4) BN / WH	(4) 2772	(4) Left Front Door Lock Switch Unlock Signal	(4) I	(4) —
(5) 5	(5) 0.35	(5) BK	(5) 1150	(5) Ground	(5) I	(5) —
6	—	—	—	Not Occupied	—	—

S13LR Door Lock Switch - Left Rear

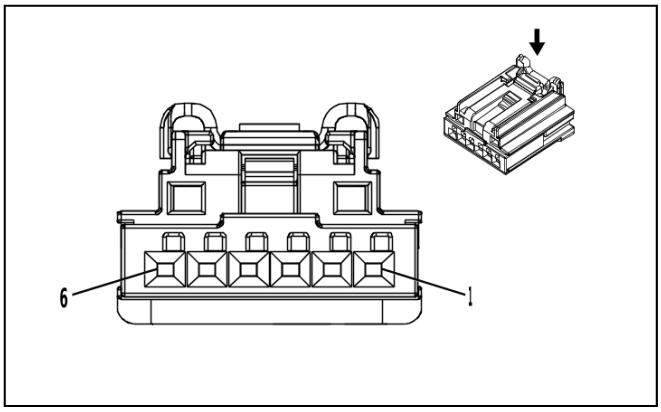

4145138

Connector Part Information

- Harness Type: Rear Side Door Door Lock Door Wiring Harness - Left
- OEM Connector: 2035363-2
- Service Connector: Service by Harness - See Part Catalog
- Description: 6-Way F 0.64 Generation Y Series(BK)

Terminal Part Information

Terminal Type ID	Terminated Lead	Diagnostic Test Probe	Terminal Removal Tool
I	Not required	J-35616-64B (L-BU)	No Tool Required

S13LR Door Lock Switch - Left Rear

Pin	Size	Color	Circuit	Function	Terminal Type ID	Option
(1) 1	(1) 0.35	(1) YE	(1) 6817	(1) LED Backlight Dimming Control 1	(1) I	(1) —
(2) 2	(2) 0.35	(2) VT / WH	(2) 6675	(2) Left Rear Door Lock Indicator Control	(2) I	(2) —
(3) 3	(3) 0.35	(3) VT / BU	(3) 4001	(3) Left Rear Door Lock Switch Lock Control	(3) I	(3) —
(4) 4	(4) 0.35	(4) WH / YE	(4) 4002	(4) Left Rear Door Lock Switch Unlock Control	(4) I	(4) —
(5) 5	(5) 0.35	(5) BK	(5) 1150	(5) Ground	(5) I	(5) —
6	—	—	—	Not Occupied	—	—

S13P Door Lock Switch - Passenger

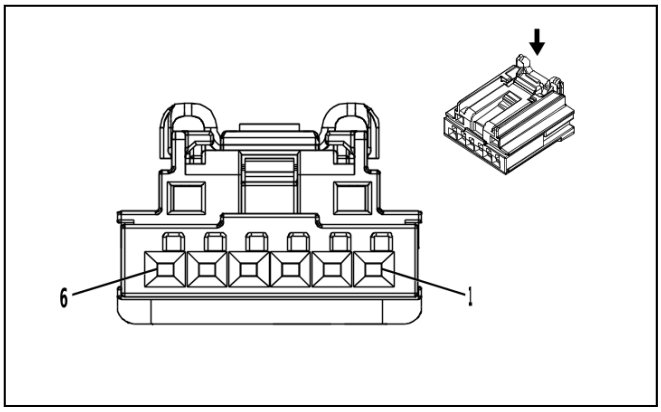

4145138

Connector Part Information

- Harness Type: Front Side Door Door Lock Door Wiring Harness - Passenger
- OEM Connector: 2035363-2
- Service Connector: Service by Harness - See Part Catalog
- Description: 6-Way F 0.64 Generation Y Series(BK)

Terminal Part Information

Terminal Type ID	Terminated Lead	Diagnostic Test Probe	Terminal Removal Tool
I	Not required	J-35616-64B (L-BU)	No Tool Required

S13P Door Lock Switch - Passenger

Pin	Size	Color	Circuit	Function	Terminal Type ID	Option
(1) 1	(1) 0.35	(1) GY / VT	(1) 4638	(1) LED Backlight Dimming Control Right Front Door	(1) I	(1) —
(2) 2	(2) 0.35	(2) YE / BU	(2) 4245	(2) Right Front Door Lock Indicator Control	(2) I	(2) —
(3) 3	(3) 0.35	(3) YE / VT	(3) 2773	(3) Right Front Door Lock Switch Lock Control	(3) I	(3) —
(4) 4	(4) 0.35	(4) BN / VT	(4) 2774	(4) Right Front Door Lock Switch Unlock Control	(4) I	(4) —
(5) 5	(5) 0.35	(5) BK	(5) 1250	(5) Ground	(5) I	(5) —
6	—	—	—	Not Occupied	—	—

S13RR Door Lock Switch - Right Rear

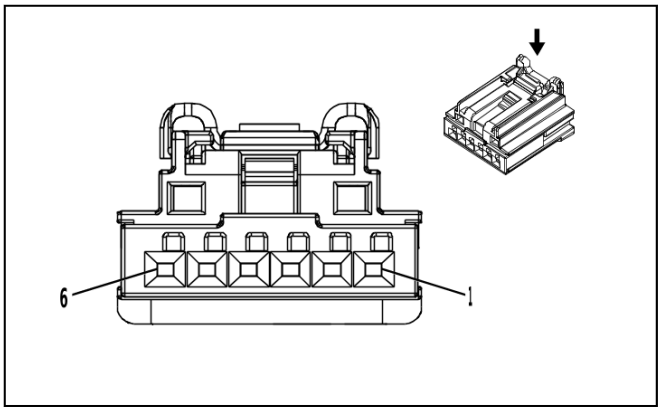

4145138

Connector Part Information

- Harness Type: Rear Side Door Door Lock Door Wiring Harness - Right
- OEM Connector: 2035363-2
- Service Connector: Service by Harness - See Part Catalog
- Description: 6-Way F 0.64 Generation Y Series(BK)

Terminal Part Information

Terminal Type ID	Terminated Lead	Diagnostic Test Probe	Terminal Removal Tool
I	Not required	J-35616-64B (L-BU)	No Tool Required

S13RR Door Lock Switch - Right Rear

Pin	Size	Color	Circuit	Function	Terminal Type ID	Option
(1) 1	(1) 0.35	(1) YE	(1) 6817	(1) LED Backlight Dimming Control 1	(1) I	(1) —
(2) 2	(2) 0.5	(2) YE / BK	(2) 6677	(2) Right Rear Door Lock Indicator Control	(2) I	(2) —
(3) 3	(3) 0.35	(3) GN / BN	(3) 4003	(3) Right Rear Door Lock Switch Lock Control	(3) I	(3) —
(4) 4	(4) 0.35	(4) BU / GY	(4) 4004	(4) Right Rear Door Lock Switch Unlock Control	(4) I	(4) —
(5) 5	(5) 0.35	(5) BK	(5) 1250	(5) Ground	(5) I	(5) —
6	—	—	—	Not Occupied	—	—

S26 Hazard Warning Switch

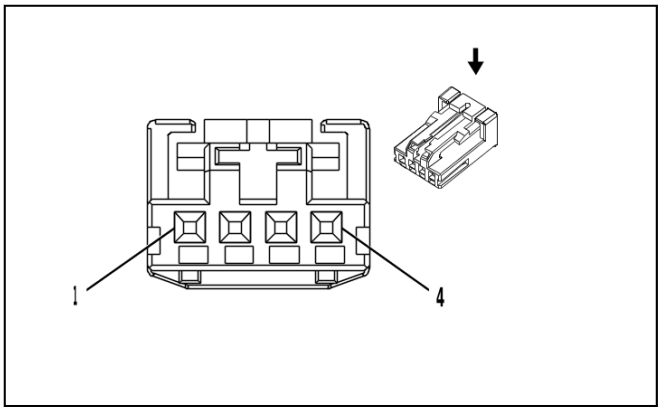

2717162

Connector Part Information

- Harness Type: Instrument Panel Wiring Harness
- OEM Connector: 1-936119-1
- Service Connector: 19367524
- Description: 4-Way F 0.64 Micro-Quadlock Series(BK)

Terminal Part Information

Terminal Type ID	Terminated Lead	Diagnostic Test Probe	Terminal Removal Tool
I	Not required	J-35616-64B (L-BU)	No Tool Required

S26 Hazard Warning Switch

Pin	Size	Color	Circuit	Function	Terminal Type ID	Option
(1) 1	(1) 0.35	(1) GN / WH	(1) 111	(1) Hazard Warning Switch Signal	(1) I	(1) —
(2) 2	(2) 0.35	(2) BK	(2) 1850	(2) Ground	(2) I	(2) —
3	—	—	—	Not Occupied	—	—
(4) 4	(4) 0.35	(4) GY / YE	(4) 7543	(4) Hazard Warning Indicator LED Dimming Signal	(4) I	(4) —

S30 Headlamp Switch

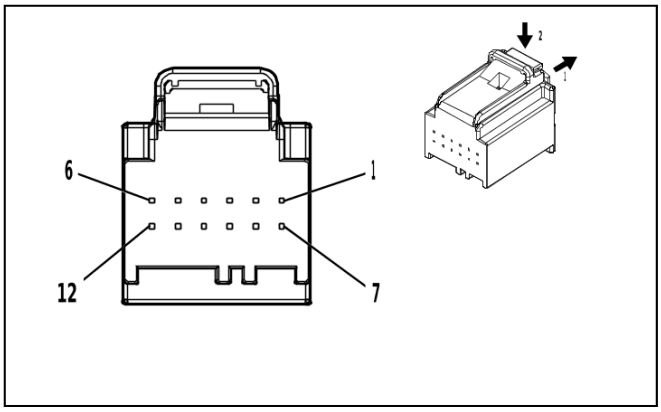

5095565

Connector Part Information

- Harness Type: Instrument Panel Wiring Harness
- OEM Connector: 31410-0125
- Service Connector: 13525987
- Description: 12-Way F 0.64 Series(BK)

Terminal Part Information

Terminal Type ID	Terminated Lead	Diagnostic Test Probe	Terminal Removal Tool
I	13584547	J-35616-64B (L-BU)	J-38125-215A

S30 Headlamp Switch

Pin	Size	Color	Circuit	Function	Terminal Type ID	Option
(1) 1	(1) 0.35	(1) WH / VT	(1) 103	(1) Headlamp Switch On Signal	(1) I	(1) —
(2) 2	(2) 0.5	(2) YE	(2) 6817	(2) LED Backlight Dimming Control 1	(2) I	(2) —
(3) 3	(3) 0.35	(3) GN / BN	(3) 306	(3) Headlamp Switch Off Signal	(3) I	(3) —
4	—	—	—	Not Occupied	—	—
(5) 5	(5) 0.35	(5) GN / GY	(5) 13	(5) Headlamp Switch Park Lamp Signal	(5) I	(5) —
6 - 7	—	—	—	Not Occupied	—	—
(8) 8	(8) 0.35	(8) BK	(8) 1850	(8) Ground	(8) I	(8) —
9 - 10	—	—	—	Not Occupied	—	—
(11) 11	(11) 0.35	(11) WH / BN	(11) 7555	(11) Headlamp Switch Signal	(11) I	(11) —
(12) 12	(12) 0.35	(12) YE	(12) 7556	(12) Headlamp Switch Reference	(12) I	(12) —

S33 Steering Wheel Horn Contact X1

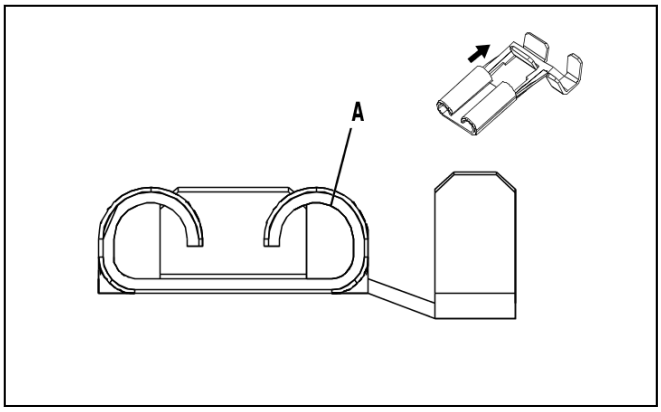

3214054

Connector Part Information
- Harness Type: Steering Wheel Horn Switch Wiring Harness
- OEM Connector: 1742086-1
- Service Connector: Service by Harness - See Part Catalog
- Description: 1-Way F Fast-In-On Series

Terminal Part Information

Terminal Type ID	Terminated Lead	Diagnostic Test Probe	Terminal Removal Tool
I	Not required	No Tool Required	No Tool Required

S33 Steering Wheel Horn Contact X1

Pin	Size	Color	Circuit	Function	Terminal Type ID	Option
A	0.35	GN / WH	3287	Horn Switch Signal	I	—

S33 Steering Wheel Horn Contact X2

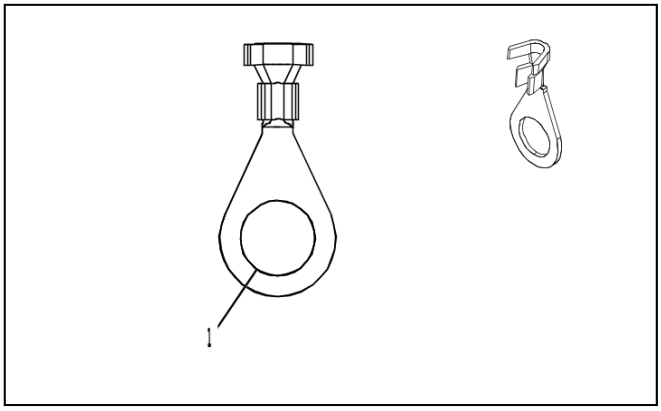

2753130

Connector Part Information
- Harness Type: Steering Wheel Horn Switch Wiring Harness
- OEM Connector: 42037-1
- Service Connector: Service by Cable Assembly — See Part Catalog
- Description: 1-Way Ring Terminal

Terminal Part Information

Terminal Type ID	Terminated Lead	Diagnostic Test Probe	Terminal Removal Tool
I	Not required	No Tool Required	No Tool Required

S33 Steering Wheel Horn Contact X2

Pin	Size	Color	Circuit	Function	Terminal Type ID	Option
(1) 1	(1) 0.35	(1) BK / WH	(1) 6051	(1) Steering Wheel Ground	(1) I	(1) —

S38 On/Off Vehicle Switch

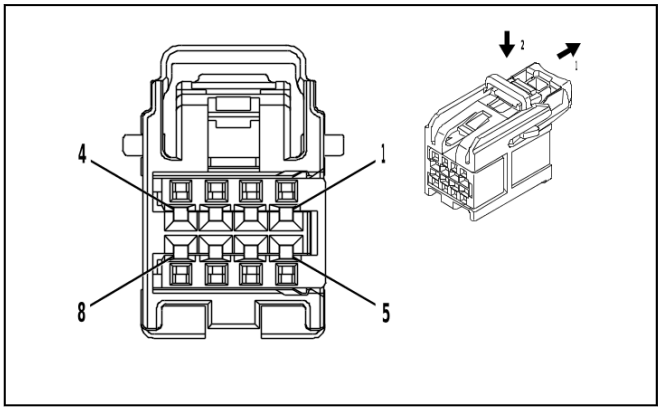

4232228

Connector Part Information

- Harness Type: Instrument Panel Wiring Harness
- OEM Connector: 15526973
- Service Connector: 19353873
- Description: 8-Way F 0.64 OCS Series(GY)

Terminal Part Information

Terminal Type ID	Terminated Lead	Diagnostic Test Probe	Terminal Removal Tool
I	Not required	J-35616-12 (BU)	No Tool Required
II	Not required	J-35616-64B (L-BU)	No Tool Required

S38 On/Off Vehicle Switch

Pin	Size	Color	Circuit	Function	Terminal Type ID	Option
(1) 1	(1) 0.35	(1) BU / BK	(1) 5719	(1) Ignition Mode Switch Start LED Signal	(1) I	(1) —
(2) 2	(2) 0.35	(2) BN / BK	(2) 5720	(2) Ignition Mode Switch Accessory LED Signal	(2) I	(2) —
(3) 3	(3) 0.5	(3) BK / WH	(3) 1851	(3) Signal Ground	(3) II	(3) —
(4) 4	(4) 0.35	(4) BU / GN	(4) 5723	(4) Ignition Mode Switch Mode Voltage	(4) I	(4) —
(5) 5	(5) 0.35	(5) YE	(5) 6817	(5) LED Backlight Dimming Control 1	(5) I	(5) —
6	—	—	—	Not Occupied	—	—

Pin	Size	Color	Circuit	Function	Terminal Type ID	Option
(7) 7	(7) 0.35	(7) BK / GY	(7) 3559	(7) Passive Start Switch 2 Low Reference	(7) I	(7) —
(8) 8	(8) 0.35	(8) GN / BK	(8) 3558	(8) Passive Start Switch Signal 2	(8) I	(8) —

S45A Liftgate Release Switch - Exterior

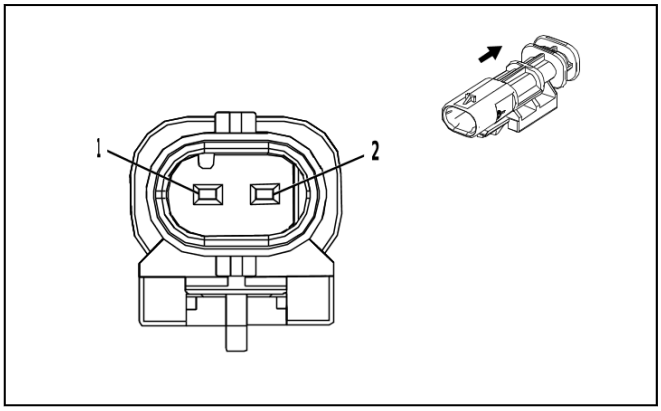

2474755

Connector Part Information

- Harness Type: Liftgate Wiring Harness
- OEM Connector: 2203314-1
- Service Connector: Service by Harness - See Part Catalog
- Description: 2-Way M 1.2 MCON Series, Sealed(BK)

Terminal Part Information

Terminal Type ID	Terminated Lead	Diagnostic Test Probe	Terminal Removal Tool
I	Not required	J-35616-17 (L-GN)	No Tool Required

S45A Liftgate Release Switch - Exterior

Pin	Size	Color	Circuit	Function	Terminal Type ID	Option
(1) 1	(1) 0.5	(1) YE / BU	(1) 5797	(1) Rear Closure Handle Switch Open Signal	(1) I	(1) —
(2) 2	(2) 0.5	(2) BK	(2) 2050	(2) Ground	(2) I	(2) —

S47D Front Seat Adjuster Memory Switch - Driver (A45 / AUN)

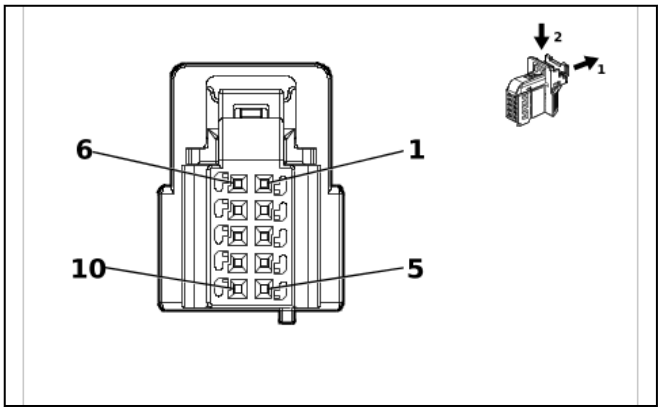

5838155

Connector Part Information

- Harness Type: Front Side Door Door Lock Door Wiring Harness - Driver
- OEM Connector: 2310000-1
- Service Connector: Service by Harness - See Part Catalog
- Description: 10-Way F 0.64 MQS Series(BK)

Terminal Part Information

Terminal Type ID	Terminated Lead	Diagnostic Test Probe	Terminal Removal Tool
I	Not required	J-35616-64B (L-BU)	No Tool Required

S47D Front Seat Adjuster Memory Switch - Driver (A45 / AUN)

Pin	Size	Color	Circuit	Function	Terminal Type ID	Option
(1) 1	(1) 0.35	(1) BN / GY	(1) 4784	(1) Left Front Door LED Backlight Dimming Control	(1) I	(1) —
(2) 2	(2) 0.35	(2) VT / YE	(2) 4244	(2) Left Front Door Lock Indicator Control	(2) I	(2) —
(3) 3	(3) 0.35	(3) BN / YE	(3) 2771	(3) Left Front Door Lock Switch Lock Signal	(3) I	(3) —
(4) 4	(4) 0.35	(4) BN / WH	(4) 2772	(4) Left Front Door Lock Switch Unlock Signal	(4) I	(4) —
(5) 5	(5) 0.35	(5) BK / WH	(5) 1151	(5) Signal Ground	(5) I	(5) —
(6) 6	(6) 0.35	(6) BU / GN	(6) 614	(6) Seat Memory Switch Set Signal	(6) I	(6) —
(7) 7	(7) 0.35	(7) WH	(7) 615	(7) Seat Memory Switch Signal 1	(7) I	(7) —
8 - 10	—	—	—	Not Occupied	—	—

S64D Front Seat Adjuster Switch - Driver

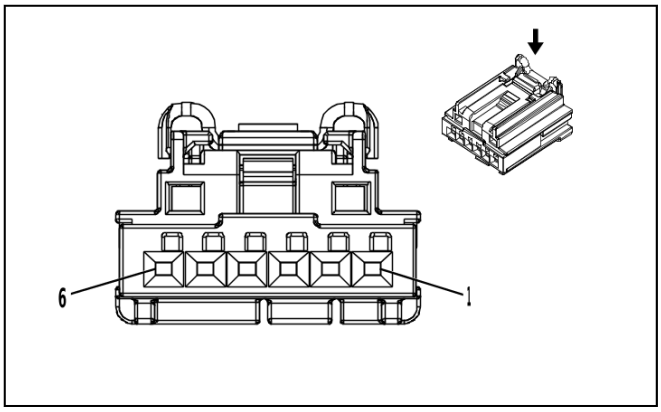

3960313

Connector Part Information

- Harness Type: Front Seat Wiring Harness - Driver
- OEM Connector: 13583825
- Service Connector: Service by Harness - See Part Catalog
- Description: 6-Way F 0.64 Generation Y Series(BK)

Terminal Part Information

Terminal Type ID	Terminated Lead	Diagnostic Test Probe	Terminal Removal Tool
I	Not required	No Tool Required	No Tool Required

S64D Front Seat Adjuster Switch - Driver

Pin	Size	Color	Circuit	Function	Terminal Type ID	Option
(1) 1	(1) —	(1) RD / BN	(1) 2240	(1) Battery Positive Voltage	(1) I	(1) —
2	—	—	—	Not Occupied	—	—
(3) 3	(3) —	(3) GN / GY	(3) 3758	(3) Driver Seat Adjuster Memory Module LIN Bus 2	(3) I	(3) —
(4) 4	(4) —	(4) BK	(4) 1150	(4) Ground	(4) I	(4) —
(5) 5	(5) —	(5) BU / YE	(5) 2818	(5) Driver Seat Auxiliary Adjustment Switch Signal	(5) I	(5) —
(6) 6	(6) —	(6) BK / VT	(6) 2817	(6) Auxiliary Driver Seat Adjustment Switch Low Reference	(6) I	(6) —
A	—	RD / YE	5040	Battery Positive Voltage	I	—
B	—	BU / YE	277	Driver Seat Recline Motor Rearward Control	I	—
C	—	YE / BU	285	Driver Seat Horizontal Motor Forward Control	I	—
D	—	GY / GN	284	Driver Seat Horizontal Motor Rearward Control	I	—
E	—	GY / BU	283	Driver Seat Rear Vertical Motor Down Control	I	—
F	—	GN / BN	286	Driver Seat Front Vertical Motor Up Control	I	—
G	—	YE	282	Driver Seat Rear Vertical Motor Up Control	I	—
H	—	GN / YE	276	Driver Seat Recline Motor Forward Control	I	—
J	—	BK	1150	Ground	I	—
K	—	BU / VT	287	Driver Seat Front Vertical Motor Down Control	I	—

S64P Front Seat Adjuster Switch - Passenger

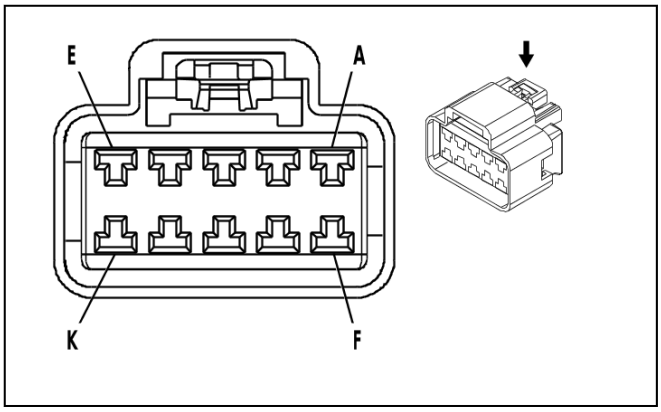

623046

Connector Part Information

- Harness Type: Front Seat Wiring Harness - Passenger
- OEM Connector: 35058909
- Service Connector: Service by Harness - See Part Catalog
- Description: 10-Way F 280 GT Series(BK)

Terminal Part Information

Terminal Type ID	Terminated Lead	Diagnostic Test Probe	Terminal Removal Tool
I	Not required	No Tool Required	No Tool Required

S64P Front Seat Adjuster Switch - Passenger

Pin	Size	Color	Circuit	Function	Terminal Type ID	Option
A	—	BU / WH	289	Passenger Seat Rear Vertical Motor Down Control	I	A7K
B	—	YE / BU	290	Passenger Seat Horizontal Motor Rearward Control	I	—
C	—	YE / WH	296	Passenger Seat Horizontal Motor Forward Control	I	—
D	—	BU / BN	77	Passenger Seat Recline Motor Rearward Control	I	—
E	—	BK	1250	Ground	I	—
F	— —	BU / WH GN / BU	289 298	Passenger Seat Rear Vertical Motor Down Control Passenger Seat Front Vertical Motor Down Control	I I	A7J A7K
G	—	RD / YE	7440	Battery Positive Voltage	I	—
H	—	GN	76	Passenger Seat Recline Motor Forward Control	I	—
J	—	GN / WH	288	Passenger Seat Rear Vertical Motor Up Control	I	A7K
K	— —	GN / WH GN / VT	288 297	Passenger Seat Rear Vertical Motor Up Control Passenger Seat Front Vertical Motor Up Control	I I	A7J A7K

S65D Front Seat Lumbar Switch - Driver (AL9)

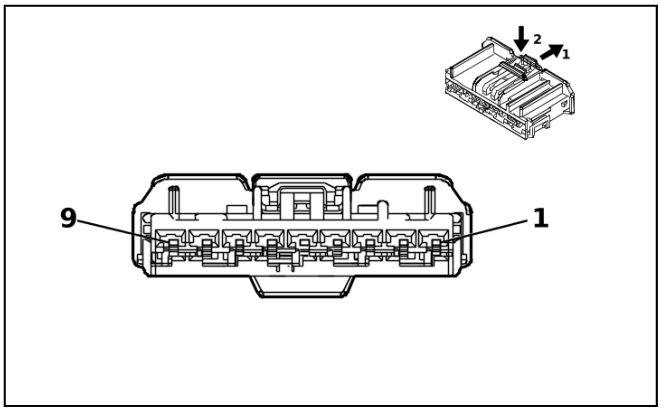

5204289

Connector Part Information

- Harness Type: Front Seat Wiring Harness - Driver
- OEM Connector: 7289-6875-40
- Service Connector: Service by Harness - See Part Catalog
- Description: 9-Way F 2.8 YESC Series(GY)

Terminal Part Information

Terminal Type ID	Terminated Lead	Diagnostic Test Probe	Terminal Removal Tool
I	Not required	No Tool Required	No Tool Required

S65D Front Seat Lumbar Switch - Driver (AL9)

Pin	Size	Color	Circuit	Function	Terminal Type ID	Option
(1) 1	(1) —	(1) BK	(1) 1150	(1) Ground	(1) I	(1) —
2	—	—	—	Not Occupied	—	—
(3) 3	(3) —	(3) RD / YE	(3) 5040	(3) Battery Positive Voltage	(3) I	(3) —
4	—	—	—	Not Occupied	—	—
(5) 5	(5) —	(5) BU	(5) 611	(5) Driver Seat Lumbar Support Motor Forward Control	(5) I	(5) —
6	—	—	—	Not Occupied	—	—
(7) 7	(7) —	(7) VT	(7) 610	(7) Driver Seat Lumbar Support Motor Backward Control	(7) I	(7) —
8 - 9	—	—	—	Not Occupied	—	—

S65D Front Seat Lumbar Switch - Driver (AVK)

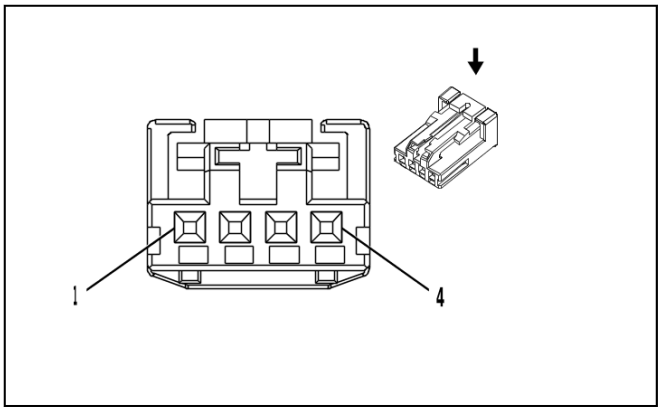

2717162

Connector Part Information

- Harness Type: Front Seat Wiring Harness - Driver
- OEM Connector: 13582963
- Service Connector: Service by Harness - See Part Catalog
- Description: 4-Way F 0.64 Micro-Quadlock Series(BK)

Terminal Part Information

Terminal Type ID	Terminated Lead	Diagnostic Test Probe	Terminal Removal Tool
I	Not required	No Tool Required	No Tool Required

S65D Front Seat Lumbar Switch - Driver (AVK)

Pin	Size	Color	Circuit	Function	Terminal Type ID	Option
1 - 2	—	—	—	Not Occupied	—	—
(3) 3	(3) —	(3) BU / YE	(3) 2818	(3) Driver Seat Auxiliary Adjustment Switch Signal	(3) I	(3) —
(4) 4	(4) —	(4) BK / VT	(4) 2817	(4) Auxiliary Driver Seat Adjustment Switch Low Reference	(4) I	(4) —

S65P Front Seat Lumbar Switch - Passenger (AT9)

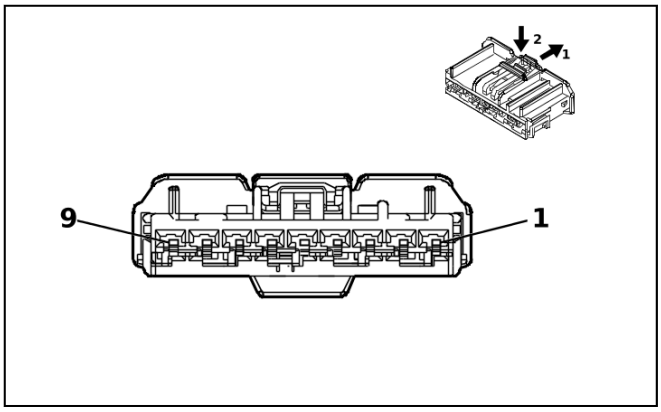

5204289

Connector Part Information

- Harness Type: Front Seat Wiring Harness - Passenger
- OEM Connector: 7289-6875-40
- Service Connector: Service by Harness - See Part Catalog
- Description: 9-Way F 2.8 YESC Series(GY)

Terminal Part Information

Terminal Type ID	Terminated Lead	Diagnostic Test Probe	Terminal Removal Tool
I	Not required	No Tool Required	No Tool Required

S65P Front Seat Lumbar Switch - Passenger (AT9)

Pin	Size	Color	Circuit	Function	Terminal Type ID	Option
(1) 1	(1) —	(1) BK	(1) 1250	(1) Ground	(1) I	(1) —
2	—	—	—	Not Occupied	—	—
(3) 3	(3) —	(3) RD / YE	(3) 7440	(3) Battery Positive Voltage	(3) I	(3) —
4	—	—	—	Not Occupied	—	—
(5) 5	(5) —	(5) BU	(5) 211	(5) Passenger Seat Lumbar Support Motor Forward Control	(5) I	(5) —
6	—	—	—	Not Occupied	—	—
(7) 7	(7) —	(7) VT	(7) 210	(7) Passenger Seat Lumbar Support Motor Backward Control	(7) I	(7) —
8 - 9	—	—	—	Not Occupied	—	—

S65P Front Seat Lumbar Switch - Passenger (AVU)

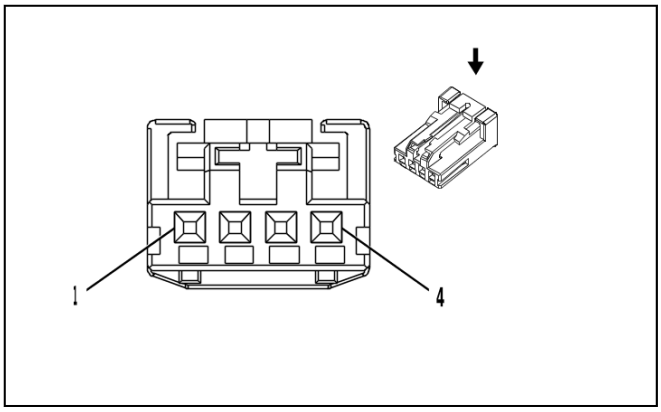

2717162

Connector Part Information

- Harness Type: Front Seat Wiring Harness - Passenger
- OEM Connector: 13582963
- Service Connector: Service by Harness - See Part Catalog
- Description: 4-Way F 0.64 Micro-Quadlock Series(BK)

Terminal Part Information

Terminal Type ID	Terminated Lead	Diagnostic Test Probe	Terminal Removal Tool
I	Not required	No Tool Required	No Tool Required

S65P Front Seat Lumbar Switch - Passenger (AVU)

Pin	Size	Color	Circuit	Function	Terminal Type ID	Option
1 - 2	—	—	—	Not Occupied	—	—
(3) 3	(3) 0.5	(3) YE / GN	(3) 1068	(3) Passenger Seat Lumbar Support Switch Analog Signal	(3) I	(3) —
(4) 4	(4) 0.5	(4) BK / BU	(4) 2194	(4) Passenger Seat Position Switch Low Reference	(4) I	(4) —

S70E Radio Favorites Switch - Steering Wheel

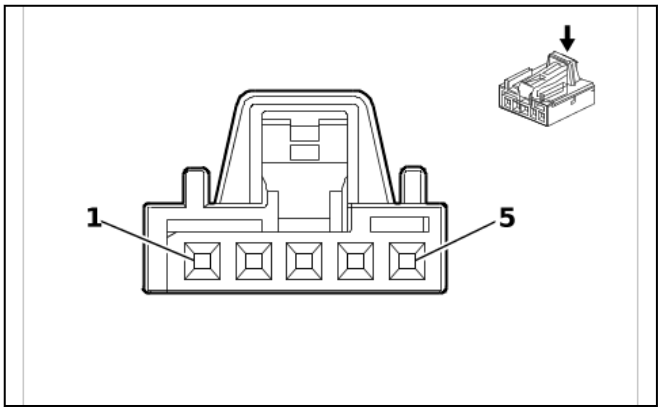

5730934

Connector Part Information

- Harness Type: Steering Wheel Horn Switch Wiring Harness
- OEM Connector: 1418776-1
- Service Connector: Service by Harness - See Part Catalog
- Description: 5-Way F MQS Series(BK)

Terminal Part Information

Terminal Type ID	Terminated Lead	Diagnostic Test Probe	Terminal Removal Tool
I	Not required	J-35616-64B (L-BU)	No Tool Required

S70E Radio Favorites Switch - Steering Wheel

Pin	Size	Color	Circuit	Function	Terminal Type ID	Option
(1) 1	(1) 0.35	(1) BK / WH	(1) 6051	(1) Steering Wheel Ground	(1) I	(1) —
(2) 2	(2) 0.35	(2) YE / BU	(2) 4312	(2) Radio Favorite Back Switch Signal	(2) I	(2) —
(3) 3	(3) 0.35 (3) 0.35	(3) WH / WH (3) WH / YE	(3) 4313 (3) 4313	(3) Radio Favorite Forward Switch Signal (3) Radio Favorite Forward Switch Signal	(3) I (3) I	(3) — (3) —
(4) 4	(4) 0.35	(4) YE / BU	(4) 6855	(4) Transmission Tap Down Switch Signal	(4) I	(4) —
5	—	—	—	Not Occupied	—	—

S70F Radio Volume Switch - Steering Wheel

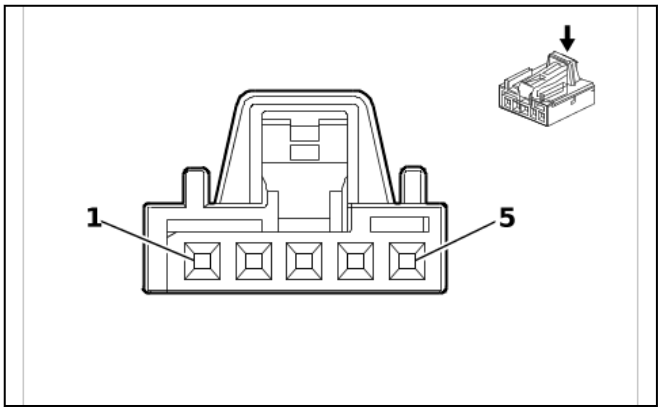

5730934

Connector Part Information

- Harness Type: Steering Wheel Horn Switch Wiring Harness
- OEM Connector: 1418776-1
- Service Connector: Service by Harness - See Part Catalog
- Description: 5-Way F MQS Series(BK)

Terminal Part Information

Terminal Type ID	Terminated Lead	Diagnostic Test Probe	Terminal Removal Tool
I	Not required	J-35616-64B (L-BU)	No Tool Required

S70F Radio Volume Switch - Steering Wheel

Pin	Size	Color	Circuit	Function	Terminal Type ID	Option
(1) 1	(1) 0.35	(1) BK / WH	(1) 6051	(1) Steering Wheel Ground	(1) I	(1) —
(2) 2	(2) 0.35	(2) GY / BN	(2) 4314	(2) Radio Volume Down Switch Signal	(2) I	(2) —
(3) 3	(3) 0.35	(3) BU	(3) 4315	(3) Radio Volume Up Switch Signal	(3) I	(3) —
(4) 4	(4) 0.35	(4) YE / BU	(4) 6855	(4) Transmission Tap Down Switch Signal	(4) I	(4) —
(5) 5	(5) 0.35	(5) VT / YE	(5) 5526	(5) Tap Up/Tap Down Switch Signal	(5) I	(5) —

S70L Cruise Control Switch

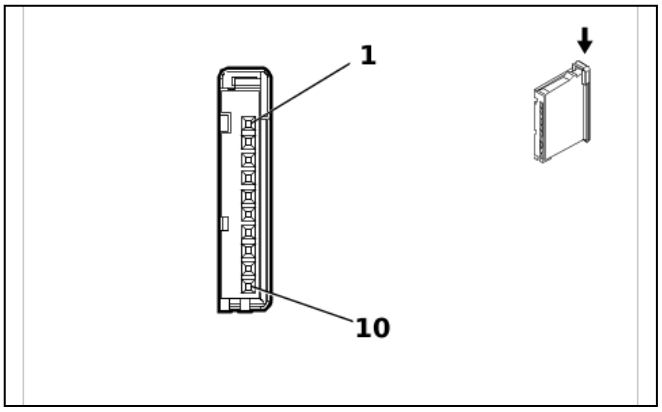

6496613

Connector Part Information

- Harness Type: Steering Wheel Horn Switch Wiring Harness
- OEM Connector: 2282268-1
- Service Connector: Service by Harness - See Part Catalog
- Description: 10-Way F 0.5 MQS Series(BK)

Terminal Part Information

Terminal Type ID	Terminated Lead	Diagnostic Test Probe	Terminal Removal Tool
I	Not required	EL-35616-58 (BK)	No Tool Required

S70L Cruise Control Switch

Pin	Size	Color	Circuit	Function	Terminal Type ID	Option
1 - 2	—	—	—	Not Occupied	—	—
(3) 3	(3) 0.35	(3) GY / GN	(3) 5737	(3) Distance Sensing Cruise Control Gap Up/ Down Switch Signal	(3) I	(3) —
4	—	—	—	Not Occupied	—	—
(5) 5	(5) 0.35	(5) YE / BK	(5) 3893	(5) Steering Wheel LED Backlight Dimming Control	(5) I	(5) —
6	—	—	—	Not Occupied	—	—
(7) 7	(7) 0.35	(7) BN / GN	(7) 1884	(7) Cruise Control Set/Coast/Resume/Accelerate Switch Signal	(7) I	(7) —
(8) 8	(8) 0.35	(8) BK / VT	(8) 1449	(8) Steering Wheel Resistor Ladder Low Reference	(8) I	(8) —
9	—	—	—	Not Occupied	—	—
(10) 10	(10) 0.35	(10) BK / WH	(10) 6051	(10) Steering Wheel Ground	(10) I	(10) —

S70R Radio Control Switch - Steering Wheel

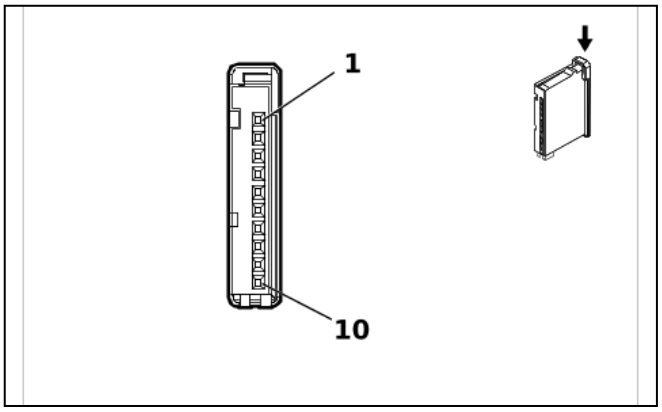

6496614

Connector Part Information

- Harness Type: Steering Wheel Horn Switch Wiring Harness
- OEM Connector: 2282268-2
- Service Connector: Service by Harness - See Part Catalog
- Description: 10-Way F 0.5 MQS Series(NA)

Terminal Part Information

Terminal Type ID	Terminated Lead	Diagnostic Test Probe	Terminal Removal Tool
I	Not required	EL-35616-58 (BK)	No Tool Required

S70R Radio Control Switch - Steering Wheel

Pin	Size	Color	Circuit	Function	Terminal Type ID	Option
(1) 1	(1) 0.35	(1) RD / GN	(1) 5140	(1) Battery Positive Voltage	(1) I	(1) —
(2) 2	(2) 0.35	(2) GY / BN	(2) 4314	(2) Radio Volume Down Switch Signal	(2) I	(2) —
(3) 3	(3) 0.35	(3) WH / YE	(3) 4313	(3) Radio Favorite Forward Switch Signal	(3) I	(3) —
(4) 4	(4) 0.35	(4) GN / WH	(4) 10652	(4) Radio LIN Bus 1	(4) I	(4) —
(5) 5	(5) 0.35	(5) YE / BK	(5) 3893	(5) Steering Wheel LED Backlight Dimming Control	(5) I	(5) —
(6) 6	(6) 0.35	(6) YE / GY	(6) 5883	(6) Steering Wheel Heating Switch Signal	(6) I	(6) —
(7) 7	(7) 0.35	(7) BN / WH	(7) 5884	(7) Steering Wheel Heating Switch LED Control	(7) I	(7) —
(8) 8	(8) 0.35	(8) BK / WH	(8) 6051	(8) Steering Wheel Ground	(8) I	(8) —
(9) 9	(9) 0.35	(9) BU	(9) 4315	(9) Radio Volume Up Switch Signal	(9) I	(9) —
(10) 10	(10) 0.35	(10) YE / BU	(10) 4312	(10) Radio Favorite Back Switch Signal	(10) I	(10) —

S71 Steering Column Tilt Wheel and Telescope Switch (N38)

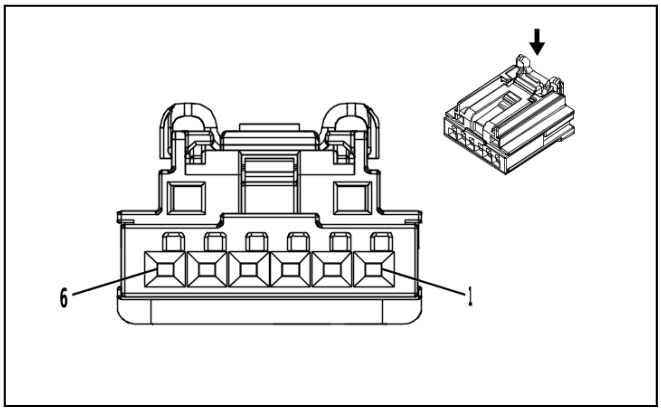

4145138

Connector Part Information

- Harness Type: Instrument Panel Wiring Harness
- OEM Connector: 2035363-2
- Service Connector: 19356359
- Description: 6-Way F 0.64 Generation Y Series(BK)

Terminal Part Information

Terminal Type ID	Terminated Lead	Diagnostic Test Probe	Terminal Removal Tool
I	Not required	J-35616-64B (L-BU)	No Tool Required

S71 Steering Column Tilt Wheel and Telescope Switch (N38)

Pin	Size	Color	Circuit	Function	Terminal Type ID	Option
(1) 1	(1) 0.35	(1) BU / YE	(1) 2094	(1) Steering Column Tilt and Telescope Switch Forward Signal	(1) I	(1) —
(2) 2	(2) 0.35	(2) YE / BN	(2) 2097	(2) Steering Column Tilt and Telescope Switch Down Signal	(2) I	(2) —
(3) 3	(3) 0.35	(3) BN / GY	(3) 2096	(3) Steering Column Tilt and Telescope Switch Up Signal	(3) I	(3) —
4	—	—	—	Not Occupied	—	—
(5) 5	(5) 0.35	(5) GN / BN	(5) 2095	(5) Steering Column Tilt and Telescope Switch Rearward Signal	(5) I	(5) —
(6) 6	(6) 0.35	(6) VT / BK	(6) 2020	(6) Steering Column Tilt and Telescope Switch Feedback Signal	(6) I	(6) —

S76 Trailer Brake Control Switch (JL1)

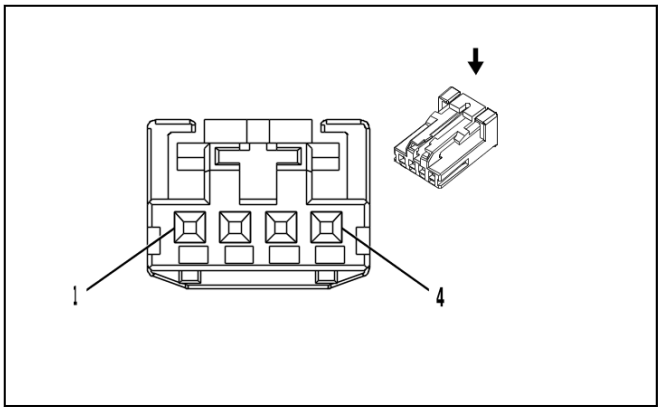

2717162

Connector Part Information

- Harness Type: Instrument Panel Wiring Harness
- OEM Connector: 1-936119-2
- Service Connector: 84867143
- Description: 4-Way F 0.64 Micro-Quadlock Series(YE)

Terminal Part Information

Terminal Type ID	Terminated Lead	Diagnostic Test Probe	Terminal Removal Tool
I	Not required	J-35616-64B (L-BU)	No Tool Required

S76 Trailer Brake Control Switch (JL1)

Pin	Size	Color	Circuit	Function	Terminal Type ID	Option
(1) 1	(1) 0.35	(1) RD / VT	(1) 4040	(1) Battery Positive Voltage	(1) I	(1) —
(2) 2	(2) 0.35	(2) GN / BU	(2) 2733	(2) Brake System Control Module LIN Bus 2	(2) I	(2) —
(3) 3	(3) 0.35	(3) BK	(3) 1850	(3) Ground	(3) I	(3) —
4	—	—	—	Not Occupied	—	—

S78 Turn Signal Switch

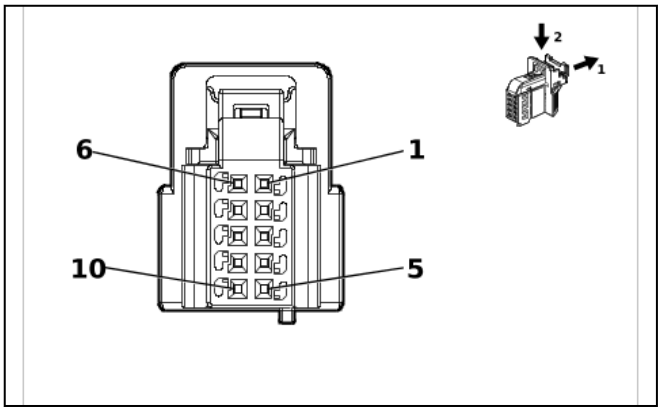

5838155

Connector Part Information

- Harness Type: Instrument Panel Wiring Harness
- OEM Connector: 2310000-1
- Service Connector: 13518417
- Description: 10-Way F 0.64 MQS Series(BK)

Terminal Part Information

Terminal Type ID	Terminated Lead	Diagnostic Test Probe	Terminal Removal Tool
I	19300632	J-35616-64B (L-BU)	J-38125-215A

S78 Turn Signal Switch

Pin	Size	Color	Circuit	Function	Terminal Type ID	Option
(1) 1	(1) 0.35	(1) WH / GN	(1) 2915	(1) Left Turn Signal Switch Signal	(1) I	(1) —
(2) 2	(2) 0.35	(2) VT / BU	(2) 2916	(2) Right Turn Signal Switch Signal	(2) I	(2) —
(3) 3	(3) 0.35	(3) BK	(3) 1850	(3) Ground	(3) I	(3) —
(4) 4	(4) 0.35	(4) BN / BU	(4) 391	(4) Rear Window Wiper Switch Signal	(4) I	(4) —
(5) 5	(5) 0.35	(5) WH / BK	(5) 94	(5) Windshield Washer Switch Signal	(5) I	(5) —
(6) 6	(6) 0.35	(6) YE / BN	(6) 307	(6) Headlamp Switch Flash Signal	(6) I	(6) —
(7) 7	(7) 0.35	(7) WH	(7) 524	(7) High Beam Select Switch High Beam Signal	(7) I	(7) —
(8) 8	(8) 0.35	(8) BK / GY	(8) 6009	(8) Windshield Wiper Switch Low Reference	(8) I	(8) —
(9) 9	(9) 0.35	(9) GY	(9) 1715	(9) Windshield Wiper Switch High Signal	(9) I	(9) —
(10) 10	(10) 0.35	(10) YE / BU	(10) 1714	(10) Windshield Wiper Switch Low Signal	(10) I	(10) —

S79D Front Side Door Window Control Switch - Driver X1

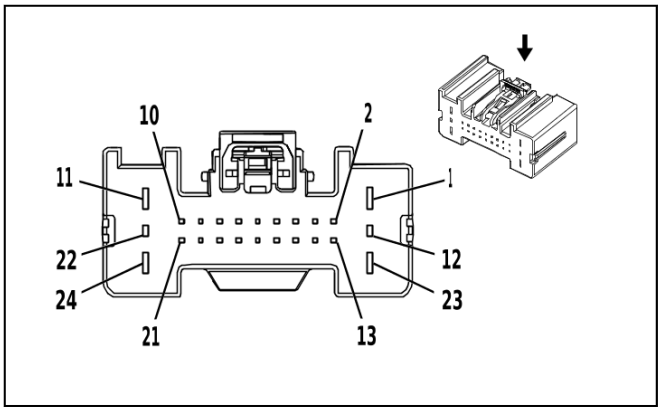

2871905

Connector Part Information

- Harness Type: Front Side Door Door Lock Door Wiring Harness - Driver
- OEM Connector: 7287-3260-30
- Service Connector: Service by Harness - See Part Catalog
- Description: 24-Way F 0.64 GEN-Y, 1.5, 2.8 YESC Series(BK)

Terminal Part Information

Terminal Type ID	Terminated Lead	Diagnostic Test Probe	Terminal Removal Tool
I	Not required	J-35616-2A (GY)	No Tool Required
II	Not required	J-35616-4A (PU)	No Tool Required
III	Not required	J-35616-64B (L-BU)	No Tool Required

S79D Front Side Door Window Control Switch - Driver X1

Pin	Size	Color	Circuit	Function	Terminal Type ID	Option
(1) 1	(1) 0.35	(1) WH / BN	(1) 2764	(1) Window Switch Left Front Down Signal	(1) II	(1) —
(2) 2	(2) 0.35	(2) GN	(2) 2766	(2) Power Window Switch Left Front Express Signal	(2) III	(2) —
(3) 3	(3) 0.35	(3) BN / YE	(3) 2771	(3) Left Front Door Lock Switch Lock Signal	(3) III	(3) —
(4) 4	(4) 0.35	(4) BN / WH	(4) 2772	(4) Left Front Door Lock Switch Unlock Signal	(4) III	(4) —
(5) 5	(5) 0.35	(5) GY / VT	(5) 2767	(5) LED Ambient Lighting Control Left Front Door	(5) III	(5) —
(6) 6	(6) 0.35	(6) VT / YE	(6) 4244	(6) Left Front Door Lock Indicator Control	(6) III	(6) —
(7) 7	(7) 0.35	(7) BN / GY	(7) 4784	(7) Left Front Door LED Backlight Dimming Control	(7) III	(7) —
(8) 8	(8) 0.35	(8) GY / YE	(8) 1760	(8) Left Side Object Detection LED Control	(8) III	(8) —
(9) 9	(9) 0.35	(9) WH / GN	(9) 2786	(9) Left Front Mirror Motor Fold In Control	(9) III	(9) —
(10) 10	(10) 0.35	(10) YE / BN	(10) 2789	(10) Left Front Mirror Motor Common Control	(10) III	(10) —
(11) 11	(11) 0.5	(11) BK	(11) 1150	(11) Ground	(11) II	(11) —
(12) 12	(12) 0.35	(12) GY / WH	(12) 2785	(12) Left Front Mirror Motor Fold Out Control	(12) I	(12) —

Pin	Size	Color	Circuit	Function	Terminal Type ID	Option
13 - 16	—	—	—	Not Occupied	—	—
(17) 17	(17) 0.35	(17) WH / VT	(17) 4258	(17) Left Front Door Lock Status Signal	(17) III	(17) —
(18) 18	(18) 0.35	(18) VT / BU	(18) 2788	(18) Left Front Mirror Motor Up [+] Down [-] Control	(18) III	(18) —
(19) 19	(19) 0.35	(19) BN / BK	(19) 2790	(19) Left Front Mirror Motor Right [+] Left [-] Control	(19) III	(19) —
20	—	—	—	Not Occupied	—	—
(21) 21	(21) 0.35	(21) GN / YE	(21) 6134	(21) Body Control Module LIN Bus 3	(21) III	(21) —
(22) 22	(22) 0.35	(22) WH	(22) 606	(22) Left Outside Rearview Mirror Heater Control	(22) I	(22) —
(23) 23	(23) 0.35	(23) GY / GN	(23) 2763	(23) Window Switch Left Front Up Signal	(23) II	(23) —
(24) 24	(24) 0.5	(24) RD / VT	(24) 1940	(24) Battery Positive Voltage	(24) II	(24) —

S79D Front Side Door Window Control Switch - Driver X2

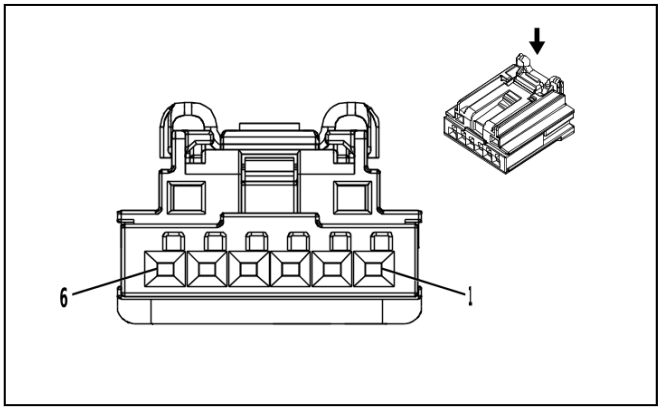

4145138

Connector Part Information

- Harness Type: Front Side Door Door Lock Door Wiring Harness - Driver
- OEM Connector: 2035363-2
- Service Connector: Service by Harness - See Part Catalog
- Description: 6-Way F 0.64 Generation Y Series(BK)

Terminal Part Information

Terminal Type ID	Terminated Lead	Diagnostic Test Probe	Terminal Removal Tool
I	Not required	J-35616-64B (L-BU)	No Tool Required

S79D Front Side Door Window Control Switch - Driver X2

Pin	Size	Color	Circuit	Function	Terminal Type ID	Option
(1) 1	(1) 0.35	(1) WH / YE	(1) 2792	(1) Left Front Mirror Position Sensor Left [-] Right [+] Signal	(1) I	(1) —
(2) 2	(2) 0.35	(2) GY / BN	(2) 2787	(2) Left Front Mirror Position Sensor Up [+] Down [-] Signal	(2) I	(2) —

Pin	Size	Color	Circuit	Function	Terminal Type ID	Option
(3) 3	(3) 0.35	(3) VT / RD	(3) 2791	(3) Left Front Mirror Position Sensor High Reference	(3) I	(3) —
(4) 4	(4) 0.35	(4) BK / BN	(4) 673	(4) Left Outside Rearview Mirror Position Sensor Low Reference	(4) I	(4) —
5 - 6	—	—	—	Not Occupied	—	—

S79LR Rear Side Door Window Switch - Left

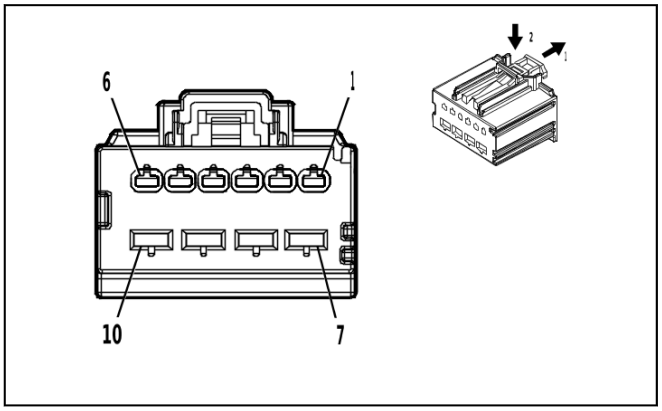

5035058

Connector Part Information

- Harness Type: Rear Side Door Door Lock Door Wiring Harness - Left
- OEM Connector: 31372-1600
- Service Connector: Service by Harness - See Part Catalog
- Description: 10-Way F 1.5, 2.8 MX Series(BK)

Terminal Part Information

Terminal Type ID	Terminated Lead	Diagnostic Test Probe	Terminal Removal Tool
I	Not required	J-35616-2A (GY)	No Tool Required
II	Not required	J-35616-4A (PU)	No Tool Required

S79LR Rear Side Door Window Switch - Left

Pin	Size	Color	Circuit	Function	Terminal Type ID	Option
(1) 1	(1) 0.35	(1) GN / GY	(1) 6135	(1) Body Control Module LIN Bus 4	(1) I	(1) —
(2) 2	(2) 0.35	(2) GY	(2) 747	(2) Left Rear Door Ajar Switch Signal	(2) I	(2) —
(3) 3	(3) 0.5	(3) BK	(3) 1150	(3) Ground	(3) I	(3) —
(4) 4	(4) 0.35	(4) GN / BU	(4) 4648	(4) Left Rear Door Lock Status Signal	(4) I	(4) —
5 - 6	—	—	—	Not Occupied	—	—
(7) 7	(7) 2.5	(7) BK	(7) 1150	(7) Ground	(7) II	(7) —
(8) 8	(8) 2.5	(8) RD / GY	(8) 3540	(8) Battery Positive Voltage	(8) II	(8) —
(9) 9	(9) 2	(9) BU / VT	(9) 668	(9) Left Rear Window Motor Up Control	(9) II	(9) —
(10) 10	(10) 2	(10) YE / BU	(10) 669	(10) Left Rear Window Motor Down Control	(10) II	(10) —

S79P Front Side Door Window Switch - Passenger

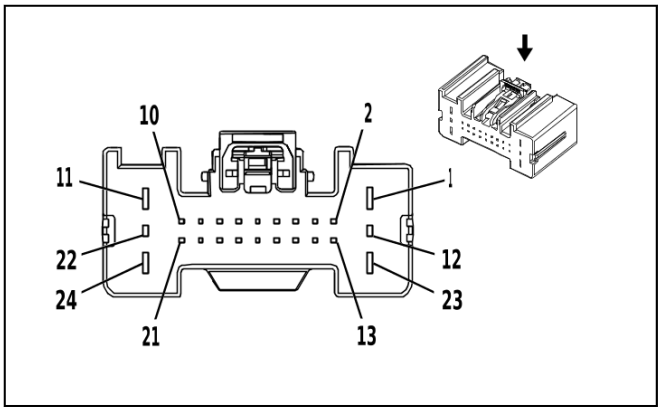

2871905

Connector Part Information

- Harness Type: Front Side Door Door Lock Door Wiring Harness - Passenger
- OEM Connector: 7287-3260-30
- Service Connector: Service by Harness - See Part Catalog
- Description: 24-Way F 0.64 GEN-Y, 1.5, 2.8 YESC Series(BK)

Terminal Part Information

Terminal Type ID	Terminated Lead	Diagnostic Test Probe	Terminal Removal Tool
I	Not required	J-35616-2A (GY)	No Tool Required
II	Not required	J-35616-4A (PU)	No Tool Required
III	Not required	J-35616-64B (L-BU)	No Tool Required

S79P Front Side Door Window Switch - Passenger

Pin	Size	Color	Circuit	Function	Terminal Type ID	Option
(1) 1	(1) 0.5	(1) BK	(1) 1250	(1) Ground	(1) II	(1) —
(2) 2	(2) 0.35	(2) YE / RD	(2) 2799	(2) Right Front Mirror Position Sensor High Reference	(2) III	(2) —
(3) 3	(3) 0.35	(3) GN / BK	(3) 2798	(3) Right Front Mirror Motor Right [+] Left [-] Control	(3) III	(3) —
(4) 4	(4) 0.35	(4) YE / VT	(4) 2796	(4) Right Front Mirror Motor Up [+] Down [-] Control	(4) III	(4) —
(5) 5	(5) 0.35	(5) WH / BN	(5) 2768	(5) LED Ambient Lighting Control Right Front Door	(5) III	(5) —
(6) 6	(6) 0.35	(6) YE / BU	(6) 4245	(6) Right Front Door Lock Indicator Control	(6) III	(6) —
(7) 7	(7) 0.35	(7) GY / VT	(7) 4638	(7) LED Backlight Dimming Control Right Front Door	(7) III	(7) —
(8) 8	(8) 0.35	(8) GY	(8) 1761	(8) Right Side Object Detection LED Control	(8) III	(8) —
(9) 9	(9) 0.35	(9) BU / GY	(9) 2794	(9) Right Front Mirror Motor Fold In Control	(9) III	(9) —
(10) 10	(10) 0.35	(10) YE / WH	(10) 2793	(10) Right Front Mirror Motor Fold Out Control	(10) III	(10) —
(11) 11	(11) 0.35	(11) GN	(11) 1184	(11) Window Switch Right Front Up Signal	(11) II	(11) —
(12) 12	(12) 0.35	(12) BN / VT	(12) 607	(12) Right Outside Rearview Mirror Heater Control	(12) I	(12) —

Pin	Size	Color	Circuit	Function	Terminal Type ID	Option
13	—	—	—	Not Occupied	—	—
(14) 14	(14) 0.35	(14) GN / YE	(14) 6134	(14) Body Control Module LIN Bus 3	(14) III	(14) —
(15) 15	(15) 0.35	(15) VT / WH	(15) 2800	(15) Right Front Mirror Position Sensor Left [-] Right [+] Signal	(15) III	(15) —
(16) 16	(16) 0.35	(16) BU / YE	(16) 2795	(16) Right Front Mirror Position Sensor Up [+] Down [-] Signal	(16) III	(16) —
(17) 17	(17) 0.35	(17) YE / VT	(17) 2773	(17) Right Front Door Lock Switch Lock Control	(17) III	(17) —
(18) 18	(18) 0.35	(18) BN / VT	(18) 2774	(18) Right Front Door Lock Switch Unlock Control	(18) III	(18) —
(19) 19	(19) 0.35	(19) VT	(19) 4259	(19) Right Front Door Lock Status Signal	(19) III	(19) —
(20) 20	(20) 0.35	(20) VT / GY	(20) 2765	(20) Window Switch Right Front Express Signal	(20) III	(20) —
(21) 21	(21) 0.35	(21) WH	(21) 2797	(21) Right Front Mirror Motor Common Control	(21) III	(21) —
(22) 22	(22) 0.35	(22) BK / GN	(22) 675	(22) Right Outside Rearview Mirror Position Sensor Low Reference	(22) I	(22) —
(23) 23	(23) 0.5	(23) RD / BU	(23) 5240	(23) Battery Positive Voltage	(23) II	(23) —
(24) 24	(24) 0.35	(24) BN	(24) 5295	(24) Window Switch Right Front Down Signal	(24) II	(24) —

S79RR Rear Side Door Window Switch - Right

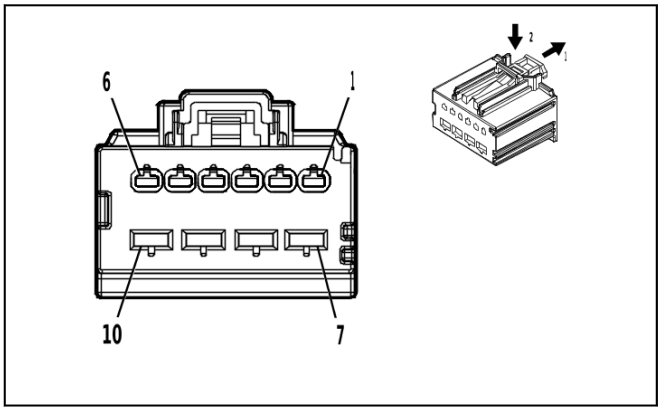

5035058

Connector Part Information

- Harness Type: Rear Side Door Door Lock Door Wiring Harness - Right
- OEM Connector: 31372-1600
- Service Connector: Service by Harness - See Part Catalog
- Description: 10-Way F 1.5, 2.8 MX Series(BK)

Terminal Part Information

Terminal Type ID	Terminated Lead	Diagnostic Test Probe	Terminal Removal Tool
I	Not required	J-35616-2A (GY)	No Tool Required
II	Not required	J-35616-4A (PU)	No Tool Required

S79RR Rear Side Door Window Switch - Right

Pin	Size	Color	Circuit	Function	Terminal Type ID	Option
(1) 1	(1) 0.35	(1) GN / GY	(1) 6135	(1) Body Control Module LIN Bus 4	(1) I	(1) —
(2) 2	(2) 0.35	(2) GY	(2) 748	(2) Right Rear Door Ajar Switch Signal	(2) I	(2) —
3	—	—	—	Not Occupied	—	—
(4) 4	(4) 0.35	(4) WH / GY	(4) 4649	(4) Right Rear Door Lock Status Signal	(4) I	(4) —
5 - 6	—	—	—	Not Occupied	—	—
(7) 7	(7) 2.5	(7) BK	(7) 1250	(7) Ground	(7) II	(7) —
(8) 8	(8) 2.5	(8) RD / BN	(8) 4240	(8) Battery Positive Voltage	(8) II	(8) —
(9) 9	(9) 2	(9) BU / GY	(9) 670	(9) Right Rear Window Motor Up Control	(9) II	(9) —
(10) 10	(10) 2	(10) GN / BK	(10) 671	(10) Right Rear Window Motor Down Control	(10) II	(10) —

S86 Vehicle Stability Control System Switch

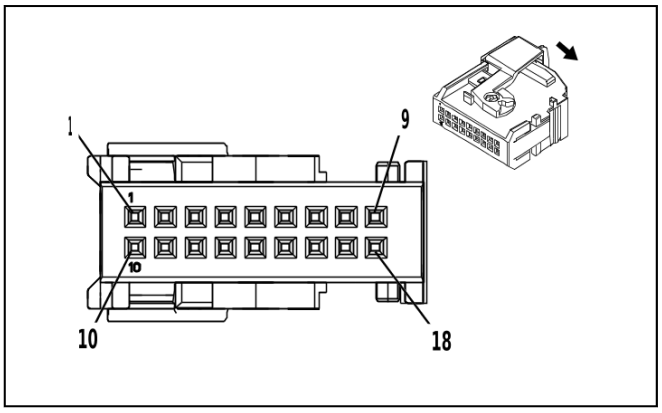

4329088

Connector Part Information

- Harness Type: Instrument Panel Wiring Harness
- OEM Connector: 3-2282182-1
- Service Connector: 84976200
- Description: 18-Way F 0.64 Micro-Quadlock Series(BK)

Terminal Part Information

Terminal Type ID	Terminated Lead	Diagnostic Test Probe	Terminal Removal Tool
I	19300632	J-35616-64B (L-BU)	J-38125-215A

S86 Vehicle Stability Control System Switch

Pin	Size	Color	Circuit	Function	Terminal Type ID	Option
(1) 1	(1) 0.35	(1) BU / VT	(1) 1788	(1) Traction Control Switch Signal 1	(1) I	(1) —
2 - 3	—	—	—	Not Occupied	—	—
(4) 4	(4) 0.35	(4) GY / WH	(4) 3153	(4) Lane Departure Warning Disable Switch Signal	(4) I	(4) —

Pin	Size	Color	Circuit	Function	Terminal Type ID	Option
(5) 5	(5) 0.35	(5) WH	(5) 3152	(5) Lane Departure Warning Indicator Control	(5) I	(5) —
(6) 6	(6) 0.35	(6) GY / GN	(6) 2555	(6) Rear Parking Assist Disable Signal	(6) I	(6) —
(7) 7	(7) 0.35	(7) GN / BN	(7) 5852	(7) Rear Parking Assist Disable LED Signal	(7) I	(7) —
(8) 8	(8) 0.5	(8) BU / WH	(8) 3119	(8) Roof Rail Air Bag Disable Switch Signal	(8) I	(8) —
(9) 9	(9) 0.35	(9) BU / YE	(9) 6844	(9) ABS/Traction Control Hill Descent Control Switch Signal	(9) I	(9) —
(10) 10	(10) 0.35	(10) BK / WH	(10) 1851	(10) Signal Ground	(10) I	(10) —
(11) 11	(11) 0.5	(11) YE	(11) 6817	(11) LED Backlight Dimming Control 1	(11) I	(11) —
12	—	—	—	Not Occupied	—	—
(13) 13	(13) 0.35	(13) GY / BU	(13) 3602	(13) Curb View Enable Signal	(13) I	(13) —
(14) 14	(14) 0.5	(14) BN / WH	(14) 3895	(14) Roof Rail Air Bag Disable Switch Low Reference	(14) I	(14) —
(15) 15	(15) 0.35	(15) BU / BN	(15) 3161	(15) Parking Assist Parallel Parking Disable Switch Signal	(15) I	(15) —
16	—	—	—	Not Occupied	—	—
(17) 17	(17) 0.35	(17) GN	(17) 1110	(17) Stop/Start Indicator Control	(17) I	(17) —
(18) 18	(18) 0.35	(18) BU	(18) 1111	(18) Stop/Start Switch Signal	(18) I	(18) —

S91 Parking Brake Control Switch

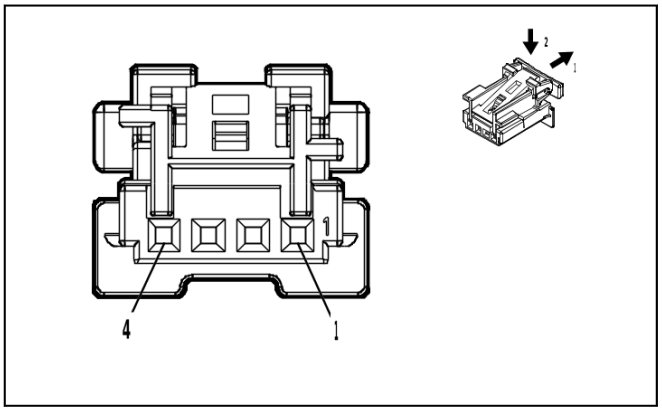

4997407

Connector Part Information

- Harness Type: Instrument Panel Wiring Harness
- OEM Connector: 2294218-1
- Service Connector: 19371192
- Description: 4-Way F 0.64 Micro-Quadlock Series(BK)

Terminal Part Information

Terminal Type ID	Terminated Lead	Diagnostic Test Probe	Terminal Removal Tool
I	Not required	J-35616-64B (L-BU)	No Tool Required

S91 Parking Brake Control Switch

Pin	Size	Color	Circuit	Function	Terminal Type ID	Option
(1) 1	(1) 0.35	(1) RD / GN	(1) 5140	(1) Battery Positive Voltage	(1) I	(1) —
(2) 2	(2) 0.5	(2) GN / YE	(2) 2731	(2) Brake System Control Module LIN Bus 1	(2) I	(2) —
3	—	—	—	Not Occupied	—	—
(4) 4	(4) 0.5	(4) BK / WH	(4) 1851	(4) Signal Ground	(4) I	(4) —

S126 Ride Control Switch

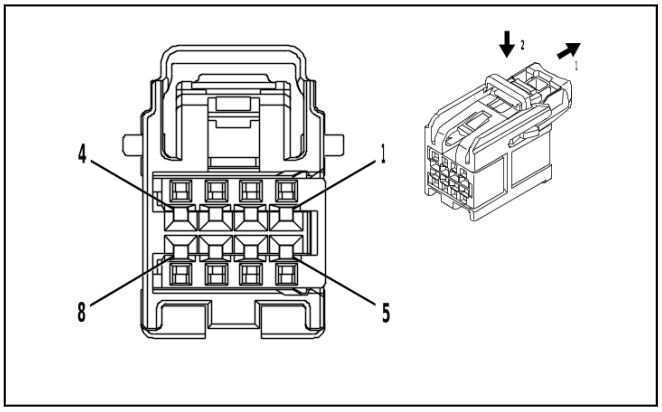

4232228

Connector Part Information

- Harness Type: Instrument Panel Wiring Harness
- OEM Connector: 15526973
- Service Connector: 19353873
- Description: 8-Way F 0.64 OCS Series(GY)

Terminal Part Information

Terminal Type ID	Terminated Lead	Diagnostic Test Probe	Terminal Removal Tool
I	Not required	J-35616-12 (BU)	No Tool Required

S126 Ride Control Switch

Pin	Size	Color	Circuit	Function	Terminal Type ID	Option
(1) 1	(1) 0.35	(1) WH / BN	(1) 2203	(1) Enhanced Driver Mode 2 Switch Signal	(1) I	(1) —
2	—	—	—	Not Occupied	—	—
(3) 3	(3) 0.35	(3) BK / VT	(3) 1449	(3) Steering Wheel Resistor Ladder Low Reference	(3) I	(3) —
(4) 4	(4) 0.35	(4) YE	(4) 6817	(4) LED Backlight Dimming Control 1	(4) I	(4) —
(5) 5	(5) 0.35	(5) BK	(5) 1850	(5) Ground	(5) I	(5) —
6 - 8	—	—	—	Not Occupied	—	—

S141 Liftgate Window Release Switch - Exterior

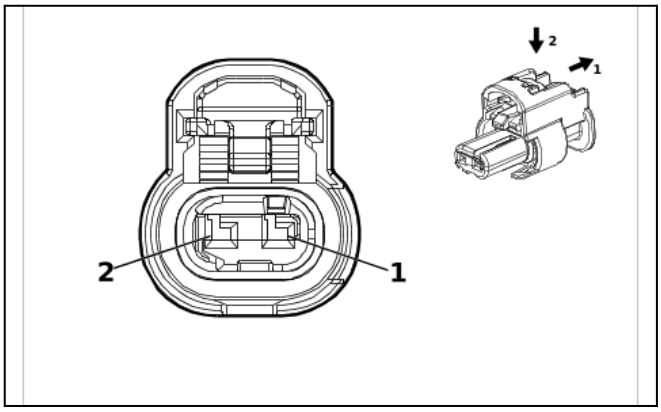

4649903

Connector Part Information
- Harness Type: Rear License Plate Lamp Wiring Harness
- OEM Connector: 1-2296694-1
- Service Connector: Service by Harness - See Part Catalog
- Description: 2-Way F 1.2 MCON Series, Sealed(BK)

Terminal Part Information

Terminal Type ID	Terminated Lead	Diagnostic Test Probe	Terminal Removal Tool
I	Not required	J-35616-12 (BU)	No Tool Required

S141 Liftgate Window Release Switch - Exterior

Pin	Size	Color	Circuit	Function	Terminal Type ID	Option
(1) 1	(1) 0.35	(1) GY / GN	(1) 6190	(1) Liftgate Window/Rear Compartment Lid, Exterior Unlatch Signal	(1) I	(1) —
(2) 2	(2) 0.35	(2) BK	(2) 2050	(2) Ground	(2) I	(2) —

S143L Rear Seat Back Folding Switch - 2nd Row Left (ATN / ATT)

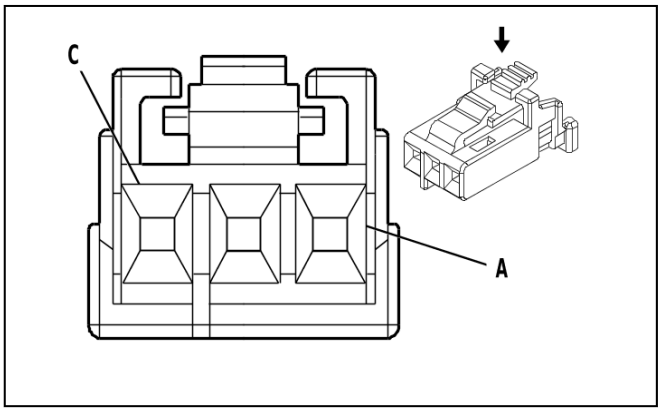

1376712

Connector Part Information
- Harness Type: Body Wiring Harness
- OEM Connector: 15417063
- Service Connector: 88987857
- Description: 3-Way F 0.64 Micro-Pack Series(BK)

Terminal Part Information

Terminal Type ID	Terminated Lead	Diagnostic Test Probe	Terminal Removal Tool
I	Not required	J-35616-64B (L-BU)	No Tool Required

S143L Rear Seat Back Folding Switch - 2nd Row Left (ATN / ATT)

Pin	Size	Color	Circuit	Function	Terminal Type ID	Option
A	0.35	YE / BK	5813	Park Enable Control	I	—
B	—	—	—	Not Occupied	—	—
C	0.5	GN	6808	Left Rear Folding Seat Motor Control	I	—

S143R Rear Seat Back Folding Switch - 2nd Row Right (ATN / ATT)

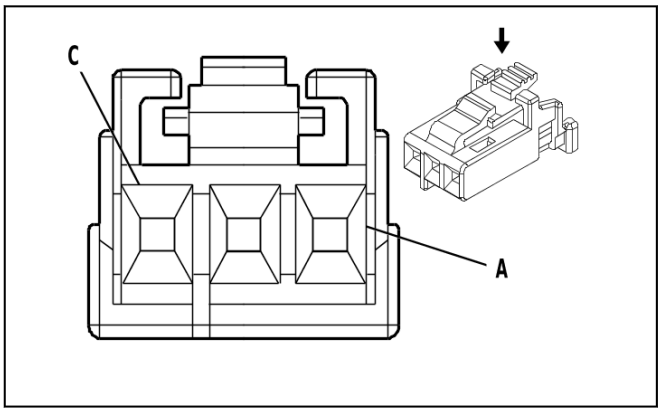

1376712

Connector Part Information

- Harness Type: Body Wiring Harness
- OEM Connector: 15417063
- Service Connector: 88987857
- Description: 3-Way F 0.64 Micro-Pack Series(BK)

Terminal Part Information

Terminal Type ID	Terminated Lead	Diagnostic Test Probe	Terminal Removal Tool
I	Not required	J-35616-64B (L-BU)	No Tool Required

S143R Rear Seat Back Folding Switch - 2nd Row Right (ATN / ATT)

Pin	Size	Color	Circuit	Function	Terminal Type ID	Option
A	0.35	YE / BK	5813	Park Enable Control	I	—
B	—	—	—	Not Occupied	—	—
C	0.5	BN / WH	6809	Right Rear Folding Seat Motor Control	I	—

S144A Rear Seat Back Folding Switch - 2nd Row Rear Compartment (ATN / ATT)

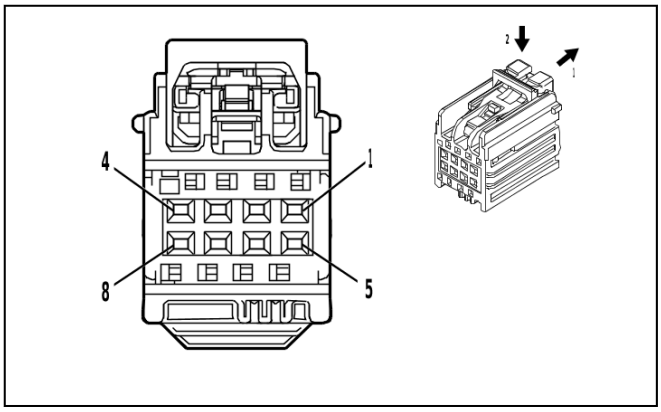

4808677

Connector Part Information

- Harness Type: Body Wiring Harness
- OEM Connector: 7289-2894-30
- Service Connector: 19368548
- Description: 8-Way F 0.64 YESC Series(BK)

Terminal Part Information

Terminal Type ID	Terminated Lead	Diagnostic Test Probe	Terminal Removal Tool
I	Not required	J-35616-64B (L-BU)	No Tool Required

S144A Rear Seat Back Folding Switch - 2nd Row Rear Compartment (ATN / ATT)

Pin	Size	Color	Circuit	Function	Terminal Type ID	Option
1	—	—	—	Not Occupied	—	—
(2) 2	(2) 0.35	(2) YE / BK	(2) 5813	(2) Park Enable Control	(2) I	(2) —
3	—	—	—	Not Occupied	—	—
(4) 4	(4) 0.5	(4) GN	(4) 6808	(4) Left Rear Folding Seat Motor Control	(4) I	(4) —
(5) 5	(5) 0.75	(5) BN / WH	(5) 6809	(5) Right Rear Folding Seat Motor Control	(5) I	(5) —
6 - 8	—	—	—	Not Occupied	—	—

S144B 3rd Row Seat Folding Switch - Rear Compartment (AS8)

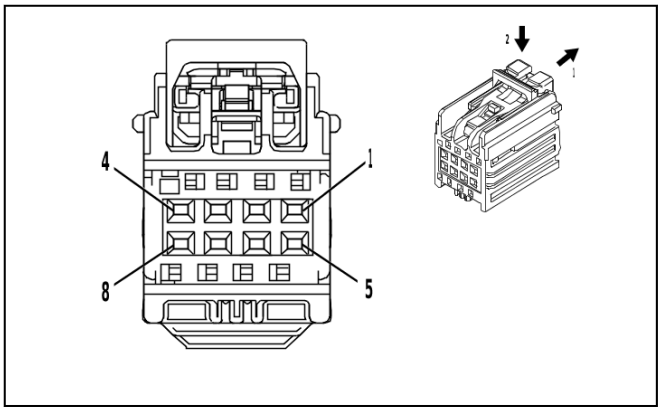

4280711

Connector Part Information

- Harness Type: Body Wiring Harness
- OEM Connector: 7289-2895-40
- Service Connector: 19355209
- Description: 8-Way F 0.64 Kaizen Series(GY)

Terminal Part Information

Terminal Type ID	Terminated Lead	Diagnostic Test Probe	Terminal Removal Tool
I	Not required	J-35616-64B (L-BU)	No Tool Required

S144B 3rd Row Seat Folding Switch - Rear Compartment (AS8)

Pin	Size	Color	Circuit	Function	Terminal Type ID	Option
(1) 1	(1) 0.5	(1) YE / BU	(1) 2698	(1) Left 3rd Row Seat Recline Switch Signal	(1) I	(1) —
2 - 3	—	—	—	Not Occupied	—	—
(4) 4	(4) 0.5	(4) BK / BU	(4) 5474	(4) 3rd Row Seat Sensor Low Reference	(4) I	(4) —
5	—	—	—	Not Occupied	—	—
(6) 6	(6) 0.5	(6) GN / GY	(6) 2699	(6) Right 3rd Row Seat Recline Switch Signal	(6) I	(6) —
7 - 8	—	—	—	Not Occupied	—	—

S145 Beverage Cooler Switch (DCK)

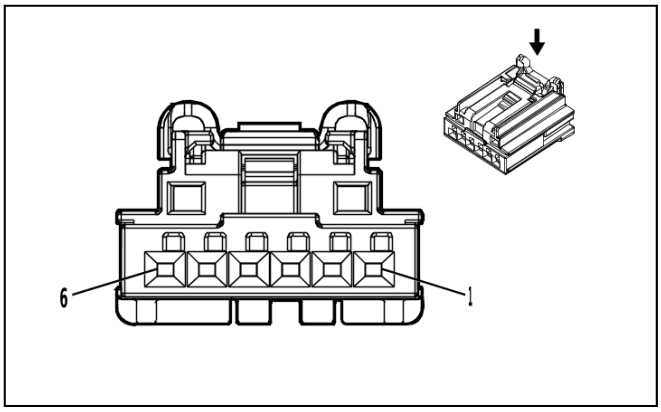

5020940

Connector Part Information

- Harness Type: Front Floor Console Wiring Harness
- OEM Connector: 2035363-6
- Service Connector: Service by Harness - See Part Catalog
- Description: 6-Way F 0.64 Generation Y Series(BK)

Terminal Part Information

Terminal Type ID	Terminated Lead	Diagnostic Test Probe	Terminal Removal Tool
I	Not required	J-35616-64B (L-BU)	No Tool Required

S145 Beverage Cooler Switch (DCK)

Pin	Size	Color	Circuit	Function	Terminal Type ID	Option
(1) 1	(1) 0.75	(1) BK	(1) 1250	(1) Ground	(1) I	(1) —
(2) 2	(2) 0.35	(2) YE	(2) 6817	(2) LED Backlight Dimming Control 1	(2) I	(2) —
(3) 3	(3) 0.35	(3) GN / WH	(3) 7846	(3) Refrigerator On Indicator Control	(3) I	(3) —
(4) 4	(4) 0.35	(4) BN / BK	(4) 7844	(4) Refrigerator Enable Signal	(4) I	(4) —
(5) 5	(5) 0.35	(5) BU / GN	(5) 7845	(5) Refrigerator Freeze Indicator Control	(5) I	(5) —
6	—	—	—	Not Occupied	—	—

S194 Emergency Vehicle Warning Rear Lamp Switch (5W4 / 9C1)

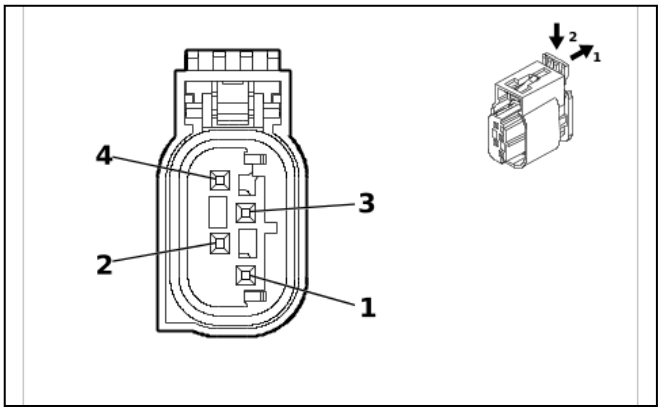

5215490

Connector Part Information

- Harness Type: Liftgate Wiring Harness
- OEM Connector: 13655424
- Service Connector: Service by Harness - See Part Catalog
- Description: 4-Way F 0.64 MTS Series, Sealed(BK)

Terminal Part Information

Terminal Type ID	Terminated Lead	Diagnostic Test Probe	Terminal Removal Tool
I	Not required	J-35616-64B (L-BU)	No Tool Required

S194 Emergency Vehicle Warning Rear Lamp Switch (5W4 / 9C1)

Pin	Size	Color	Circuit	Function	Terminal Type ID	Option
(1) 1	(1) 0.75	(1) BK	(1) 2050	(1) Ground	(1) I	(1) —
2	—	—	—	Not Occupied	—	—
(3) 3	(3) 0.75	(3) VT / GN	(3) 8869	(3) Police Liftgate Strobe Rear On OFF Control	(3) I	(3) —
4	—	—	—	Not Occupied	—	—

T1 DC/AC Converter Control Module X1 (KI4 / KI5)

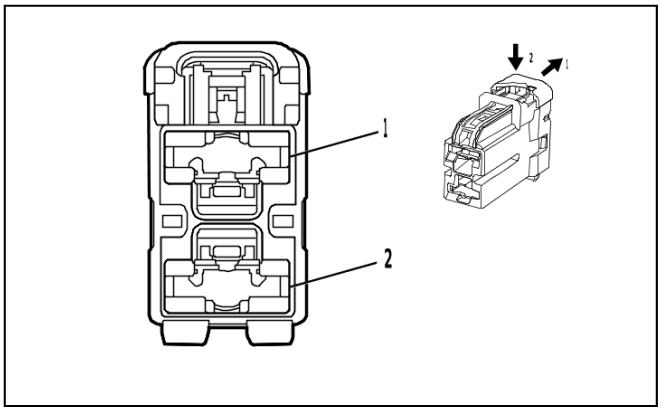

2453116

Connector Part Information
- Harness Type: Body Wiring Harness
- OEM Connector: 7283-0724-30
- Service Connector: 85011842
- Description: 2-Way F 9.5 Series(BK)

Terminal Part Information

Terminal Type ID	Terminated Lead	Diagnostic Test Probe	Terminal Removal Tool
I	Not required	J-35616-22 (RD)	No Tool Required

T1 DC/AC Converter Control Module X1 (KI4 / KI5)

Pin	Size	Color	Circuit	Function	Terminal Type ID	Option
(1) 1	(1) 5	(1) BN / BK	(1) 4629	(1) DC/AC Inverter Control	(1) I	(1) —
(2) 2	(2) 5	(2) BK	(2) 1450	(2) Ground	(2) I	(2) —

T1 DC/AC Converter Control Module X2 (KI4 / KI5)

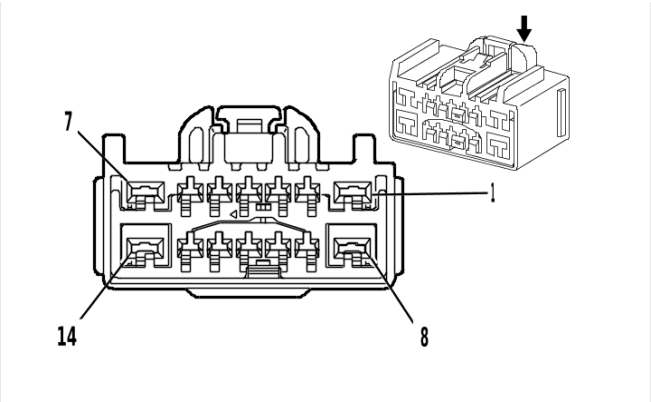

1540775

Connector Part Information
- Harness Type: Body Rear Wiring Harness Extension Harness
- OEM Connector: 7289-7631-90
- Service Connector: Service by Harness - See Part Catalog
- Description: 14-Way F 1.5, 2.8 YESC Series(BU)

Terminal Part Information

Terminal Type ID	Terminated Lead	Diagnostic Test Probe	Terminal Removal Tool
I	Not required	J-35616-2A (GY)	No Tool Required
II	Not required	J-35616-4A (PU)	No Tool Required

T1 DC/AC Converter Control Module X2 (KI4 / KI5)

Pin	Size	Color	Circuit	Function	Terminal Type ID	Option
(1) 1	(1) 0.75	(1) BN	(1) 10117	(1) AC Outlet Phase A Control	(1) II	(1) —
(2) 2	(2) 0.5	(2) VT / RD	(2) 4049	(2) AC Power Outlet Sensor High Reference	(2) I	(2) —
(3) 3	(3) 0.5	(3) VT / WH	(3) 1139	(3) Run/Crank Ignition 1 Voltage	(3) I	(3) —
(4) 4	(4) 0.5	(4) WH / GN	(4) 4628	(4) DC/AC Inverter Relay Control	(4) I	(4) —
(5) 5	(5) 0.5	(5) BU / BN	(5) 6807	(5) DC/AC Inverter Control	(5) I	(5) —
6	—	—	—	Not Occupied	—	—
(7) 7	(7) 0.5	(7) BN / WH	(7) 10120	(7) AC Outlet 2 Phase A Control	(7) II	(7) —
(8) 8	(8) 0.75	(8) BU	(8) 10118	(8) AC Outlet Phase B Control	(8) II	(8) —
(9) 9	(9) 0.5	(9) BARE	(9) 10116	(9) AC Outlet Low Reference	(9) I	(9) —
(10) 10	(10) 0.5	(10) GN / BU	(10) 6133	(10) Body Control Module LIN Bus 2	(10) I	(10) —
11	—	—	—	Not Occupied	—	—
(12) 12	(12) 0.5	(12) GN / BN	(12) 2266	(12) DC/AC Inverter Control 2	(12) I	(12) —
(13) 13	(13) 0.5	(13) BARE	(13) 10119	(13) AC Outlet 2 Low Reference	(13) I	(13) —
(14) 14	(14) 0.5	(14) BU / WH	(14) 10121	(14) AC Outlet 2 Phase B Control	(14) II	(14) —

T3 Audio Amplifier X1 (UQS)

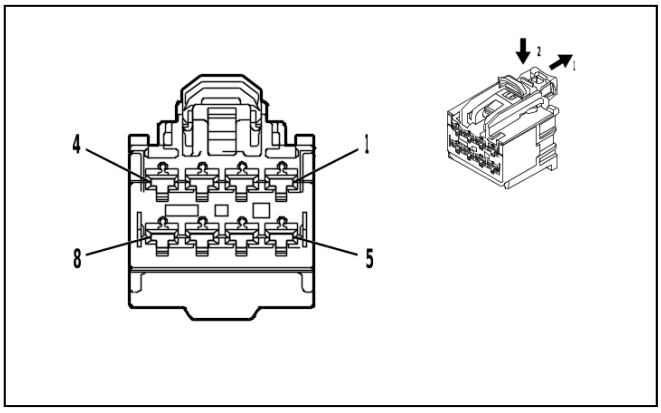

4875738

Connector Part Information

- Harness Type: Body Wiring Harness
- OEM Connector: 33223792
- Service Connector: 19369366
- Description: 8-Way F 2.8 OCS Series(BK)

Terminal Part Information

Terminal Type ID	Terminated Lead	Diagnostic Test Probe	Terminal Removal Tool
I	Not required	J-35616-4A (PU)	No Tool Required

T3 Audio Amplifier X1 (UQS)

Pin	Size	Color	Circuit	Function	Terminal Type ID	Option
(1) 1	(1) 2.5	(1) BU / GY	(1) 346	(1) Left/Rear Subwoofer [+] Control	(1) I	(1) —
(2) 2	(2) 0.75	(2) YE	(2) 200	(2) Right Front Speaker 1 [+] Control	(2) I	(2) —
(3) 3	(3) 0.75	(3) BU	(3) 201	(3) Left Front Speaker 1 [+] Control	(3) I	(3) —
(4) 4	(4) 3	(4) RD / YE	(4) 3740	(4) Battery Positive Voltage	(4) I	(4) —
(5) 5	(5) 2.5	(5) GN / BK	(5) 1794	(5) Left/Rear Subwoofer [-] Control	(5) I	(5) —
(6) 6	(6) 0.75	(6) YE / BK	(6) 117	(6) Right Front Speaker [-] Control 1	(6) I	(6) —
(7) 7	(7) 0.75	(7) BN / BU	(7) 118	(7) Left Front Speaker [-] Control 1	(7) I	(7) —
(8) 8	(8) 2.5	(8) BK / WH	(8) 1451	(8) Signal Ground	(8) I	(8) —

T3 Audio Amplifier X2 (UQS)

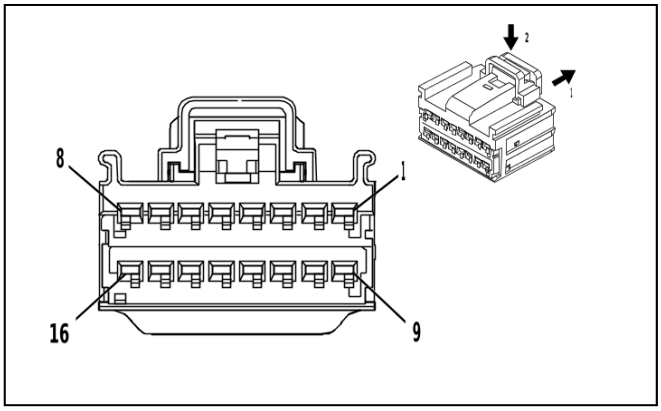

4332214

Connector Part Information

- Harness Type: Body Wiring Harness
- OEM Connector: 15512506
- Service Connector: 13591061
- Description: 16-Way F 1.5 OCS Series(BK)

Terminal Part Information

Terminal Type ID	Terminated Lead	Diagnostic Test Probe	Terminal Removal Tool
I	84757974	J-35616-2A (GY)	J-38125-215A

T3 Audio Amplifier X2 (UQS)

Pin	Size	Color	Circuit	Function	Terminal Type ID	Option
(1) 1	(1) 1	(1) YE / WH	(1) 1860	(1) Front Center Speaker [+] Control	(1) I	(1) —
(2) 2	(2) 0.75	(2) WH	(2) 46	(2) Right Rear Speaker [+] Control	(2) I	(2) —
(3) 3	(3) 0.75	(3) GN	(3) 199	(3) Left Rear Speaker [+] Control	(3) I	(3) —
(4) 4	(4) 0.75	(4) VT	(4) 8578	(4) Right Rear D-Pillar Speaker [+] Control	(4) I	(4) —
(5) 5	(5) 0.75	(5) WH / GN	(5) 8576	(5) Left Rear D-Pillar Speaker [+] Control	(5) I	(5) —
(6) 6	(6) 0.75	(6) WH / YE	(6) 1853	(6) Right Front Midrange Speaker [+] Control	(6) I	(6) —
(7) 7	(7) 0.75	(7) BU / VT	(7) 1857	(7) Left Front Midrange Speaker [+] Control	(7) I	(7) —
8	—	—	—	Not Occupied	—	—
(9) 9	(9) 1	(9) BU / YE	(9) 1960	(9) Front Center Speaker [-] Control	(9) I	(9) —
(10) 10	(10) 0.75	(10) BU / BK	(10) 115	(10) Right Rear Speaker [-] Control	(10) I	(10) —
(11) 11	(11) 0.75	(11) GN / BK	(11) 116	(11) Left Rear Speaker [-] Control	(11) I	(11) —
(12) 12	(12) 0.75	(12) GY / WH	(12) 8577	(12) Right Rear D-Pillar Speaker [-] Control	(12) I	(12) —
(13) 13	(13) 0.75	(13) BN / WH	(13) 8575	(13) Left Rear D-Pillar Speaker [-] Control	(13) I	(13) —
(14) 14	(14) 0.75	(14) BN / BK	(14) 1953	(14) Right Front Midrange Speaker [-] Control	(14) I	(14) —
(15) 15	(15) 0.75	(15) BU / BN	(15) 1957	(15) Left Front Midrange Speaker [-] Control	(15) I	(15) —
16	—	—	—	Not Occupied	—	—

T3 Audio Amplifier X4 (UQS)

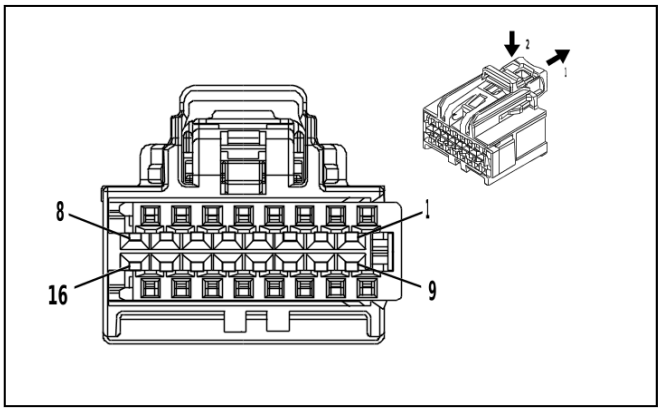

4256181

Connector Part Information

- Harness Type: Body Wiring Harness
- OEM Connector: 35016345
- Service Connector: 13519740
- Description: 16-Way F 0.64 OCS Series(BN)

Terminal Part Information

Terminal Type ID	Terminated Lead	Diagnostic Test Probe	Terminal Removal Tool
I	84619127	J-35616-64B (L-BU)	J-38125-215A
II	Service by Cable	J-35616-64B (L-BU)	J-38125-215A

T3 Audio Amplifier X4 (UQS)

Pin	Size	Color	Circuit	Function	Terminal Type ID	Option
1 - 7	—	—	—	Not Occupied	—	—
(8) 8	(8) 0.5	(8) BU / YE	(8) 4984	(8) AUTOSAR CAN Bus [-] 5 Serial Data	(8) I	(8) —
9	—	—	—	Not Occupied	—	—
(10) 10	(10) 0.35	(10) WH	(10) 8580	(10) Automotive Audio Bus A2B Serial Data 1 [+]	(10) II	(10) —
(11) 11	(11) 0.35	(11) GN	(11) 8579	(11) Automotive Audio Bus A2B Serial Data 1 [-]	(11) II	(11) —
12 - 15	—	—	—	Not Occupied	—	—
(16) 16	(16) 0.5	(16) BU / WH	(16) 4985	(16) AUTOSAR CAN Bus [+] 5 Serial Data	(16) I	(16) —

T4P High Frequency Antenna X1 (- UKL)

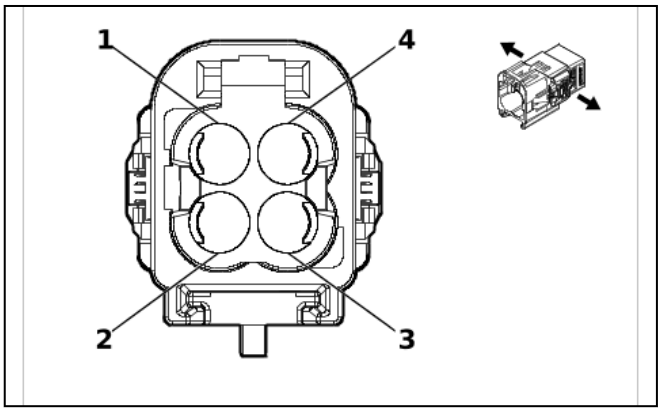

6425092

Connector Part Information

- Harness Type: Instrument Panel Wiring Harness COAX
- OEM Connector: AMZ040-C00-C
- Service Connector: Service by Cable Assembly — See Part Catalog
- Description: 4-Way M Mini Coax Type(BU)

Terminal Part Information

Terminal Type ID	Terminated Lead	Diagnostic Test Probe	Terminal Removal Tool
I	Not required	No Tool Required	No Tool Required

T4P High Frequency Antenna X1 (- UKL)

Pin	Size	Color	Circuit	Function	Terminal Type ID	Option
(1) 1	(1) 0.5	(1) Coax Cable	(1) 10314	(1) Global Navigation Satellite System Antenna Coaxial Signal	(1) I	(1) —
(3) 3	(3) 0.5	(3) Coax Cable	(3) 10292	(3) Cell Phone Antenna 2 Coaxial Signal	(3) I	(3) —
(4) 4	(4) 0.5	(4) Coax Cable	(4) 6449	(4) Coaxial Antenna Cell Phone Signal	(4) I	(4) —

T4P High Frequency Antenna X1 (UKL)

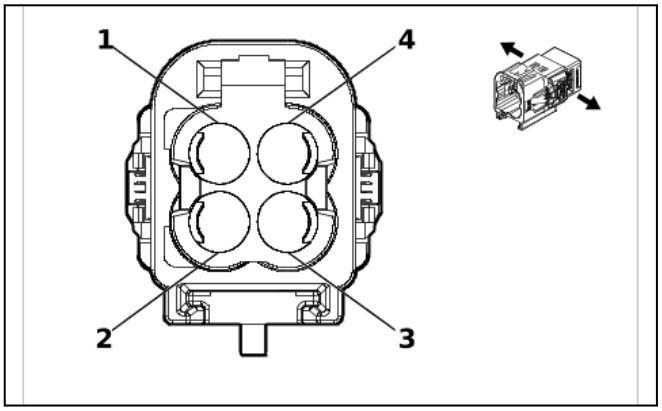

6002390

Connector Part Information

- Harness Type: Instrument Panel Wiring Harness COAX
- OEM Connector: 13520459
- Service Connector: Service by Cable Assembly — See Part Catalog
- Description: 4-Way M Mini Coax Type(GN)

Terminal Part Information

Terminal Type ID	Terminated Lead	Diagnostic Test Probe	Terminal Removal Tool
I	Not required	No Tool Required	No Tool Required

T4P High Frequency Antenna X1 (UKL)

Pin	Size	Color	Circuit	Function	Terminal Type ID	Option
(1) 1	(1) 0.5	(1) Coax Cable	(1) 10314	(1) Global Navigation Satellite System Antenna Coaxial Signal	(1) I	(1) —
2	—	—	—	Not Occupied	—	—
(3) 3	(3) 0.5	(3) Coax Cable	(3) 10292	(3) Cell Phone Antenna 2 Coaxial Signal	(3) I	(3) —
(4) 4	(4) 0.5	(4) Coax Cable	(4) 6449	(4) Coaxial Antenna Cell Phone Signal	(4) I	(4) —

T4P High Frequency Antenna X2 (U2K)

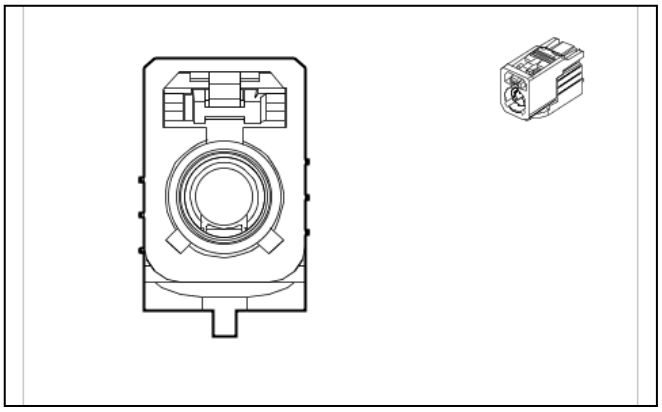

5661657

Connector Part Information
- Harness Type: Instrument Panel Wiring Harness COAX
- OEM Connector: 33351022
- Service Connector: Service by Cable Assembly — See Part Catalog
- Description: 1-Way F Coax Type(YE)

Terminal Part Information

Terminal Type ID	Terminated Lead	Diagnostic Test Probe	Terminal Removal Tool
I	Not required	No Tool Required	No Tool Required

T4P High Frequency Antenna X2 (U2K)

Pin	Size	Color	Circuit	Function	Terminal Type ID	Option
—	—	Coax Cable	—	(XM +/-HD) Coaxial Antenna XM Signal	I	—

T4TA Auxiliary Wireless Communication Interface Antenna

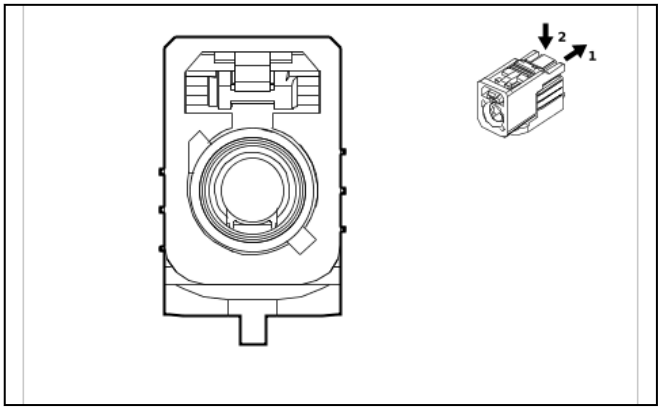

5518436

Connector Part Information
- Harness Type: Instrument Panel Wiring Harness COAX
- OEM Connector: 33351021
- Service Connector: Service by Cable Assembly — See Part Catalog
- Description: 1-Way F Coax Type(BG)

Terminal Part Information

Terminal Type ID	Terminated Lead	Diagnostic Test Probe	Terminal Removal Tool
I	Not required	No Tool Required	No Tool Required

T4TA Auxiliary Wireless Communication Interface Antenna

Pin	Size	Color	Circuit	Function	Terminal Type ID	Option
—	—	Coax Cable	—	WiFi Antenna Coaxial Signal	I	—

T8A Ignition Coil 1 (L84 / L87)

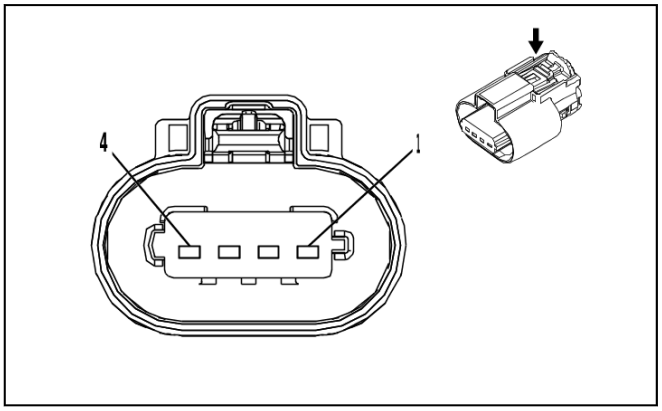

3240115

Connector Part Information

- Harness Type: Engine Wiring Harness
- OEM Connector: 34770-0402
- Service Connector: Service by Harness - See Part Catalog
- Description: 4-Way F 1.5 MX Series, Sealed(BK)

Terminal Part Information

Terminal Type ID	Terminated Lead	Diagnostic Test Probe	Terminal Removal Tool
I	Not required	J-35616-14 (GN)	No Tool Required

T8A Ignition Coil 1 (L84 / L87)

Pin	Size	Color	Circuit	Function	Terminal Type ID	Option
(1) 1	(1) 1	(1) BK	(1) 6150	(1) Engine Odd Bank Ground	(1) I	(1) —
(2) 2	(2) 0.5	(2) BK / BU	(2) 2129	(2) Ignition Control Low Reference Bank 1	(2) I	(2) —
(3) 3	(3) 0.5	(3) BU / VT	(3) 2121	(3) Ignition Control 1	(3) I	(3) —
(4) 4	(4) 1	(4) VT / BU	(4) 5291	(4) Powertrain Main Relay Fused Supply Voltage 2	(4) I	(4) —

T8B Ignition Coil 2 (L84 / L87)

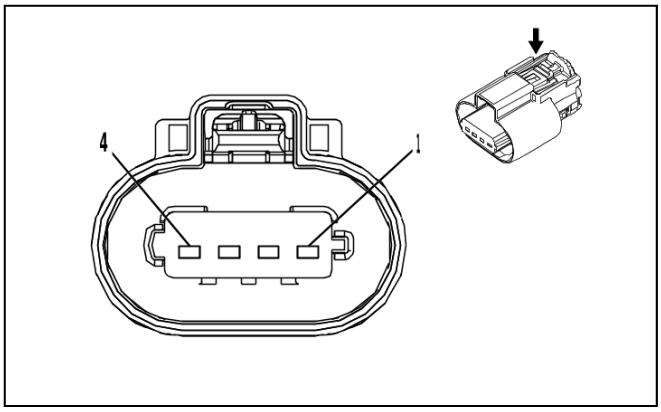

3240115

Connector Part Information

- Harness Type: Engine Wiring Harness
- OEM Connector: 34770-0402
- Service Connector: Service by Harness - See Part Catalog
- Description: 4-Way F 1.5 MX Series, Sealed(BK)

Terminal Part Information

Terminal Type ID	Terminated Lead	Diagnostic Test Probe	Terminal Removal Tool
I	Not required	J-35616-14 (GN)	No Tool Required

T8B Ignition Coil 2 (L84 / L87)

Pin	Size	Color	Circuit	Function	Terminal Type ID	Option
(1) 1	(1) 1	(1) BK	(1) 6450	(1) Engine Even Bank Ground	(1) I	(1) —
(2) 2	(2) 0.75	(2) BK / GY	(2) 2130	(2) Ignition Control Low Reference Bank 2	(2) I	(2) —
(3) 3	(3) 0.75	(3) BU / WH	(3) 2122	(3) Ignition Control 2	(3) I	(3) —
(4) 4	(4) 1	(4) VT / BU	(4) 5292	(4) Powertrain Main Relay Fused Supply Voltage 3	(4) I	(4) —

T8C Ignition Coil 3 (L84 / L87)

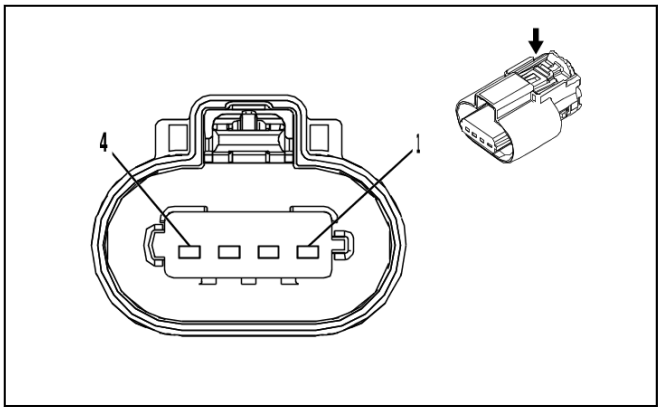

3240115

Connector Part Information

- Harness Type: Engine Wiring Harness
- OEM Connector: 34770-0402
- Service Connector: Service by Harness - See Part Catalog
- Description: 4-Way F 1.5 MX Series, Sealed(BK)

Terminal Part Information

Terminal Type ID	Terminated Lead	Diagnostic Test Probe	Terminal Removal Tool
I	Not required	J-35616-14 (GN)	No Tool Required

T8C Ignition Coil 3 (L84 / L87)

Pin	Size	Color	Circuit	Function	Terminal Type ID	Option
(1) 1	(1) 1	(1) BK	(1) 6150	(1) Engine Odd Bank Ground	(1) I	(1) —
(2) 2	(2) 0.5	(2) BK / BU	(2) 2129	(2) Ignition Control Low Reference Bank 1	(2) I	(2) —
(3) 3	(3) 0.5	(3) GN / BU	(3) 2123	(3) Ignition Control 3	(3) I	(3) —
(4) 4	(4) 1	(4) VT / BU	(4) 5291	(4) Powertrain Main Relay Fused Supply Voltage 2	(4) I	(4) —

T8D Ignition Coil 4 (L84 / L87)

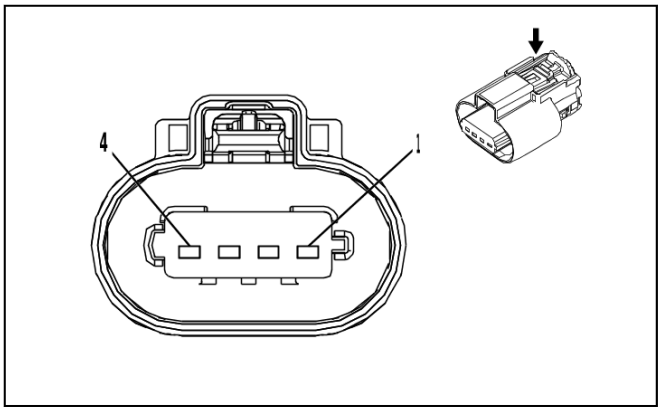

3240115

Connector Part Information

- Harness Type: Engine Wiring Harness
- OEM Connector: 34770-0402
- Service Connector: Service by Harness - See Part Catalog
- Description: 4-Way F 1.5 MX Series, Sealed(BK)

Terminal Part Information

Terminal Type ID	Terminated Lead	Diagnostic Test Probe	Terminal Removal Tool
I	Not required	J-35616-14 (GN)	No Tool Required

T8D Ignition Coil 4 (L84 / L87)

Pin	Size	Color	Circuit	Function	Terminal Type ID	Option
(1) 1	(1) 1	(1) BK	(1) 6450	(1) Engine Even Bank Ground	(1) I	(1) —
(2) 2	(2) 0.75	(2) BK / GY	(2) 2130	(2) Ignition Control Low Reference Bank 2	(2) I	(2) —
(3) 3	(3) 0.5	(3) YE / BU	(3) 2124	(3) Ignition Control 4	(3) I	(3) —
(4) 4	(4) 1	(4) VT / BU	(4) 5292	(4) Powertrain Main Relay Fused Supply Voltage 3	(4) I	(4) —

T8E Ignition Coil 5 (L84 / L87)

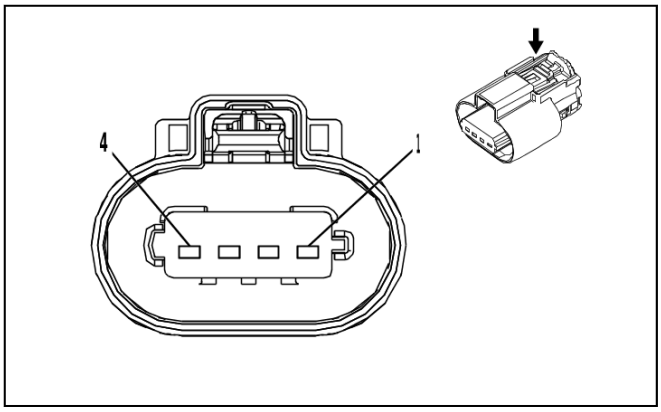

3240115

Connector Part Information

- Harness Type: Engine Wiring Harness
- OEM Connector: 34770-0402
- Service Connector: Service by Harness - See Part Catalog
- Description: 4-Way F 1.5 MX Series, Sealed(BK)

Terminal Part Information

Terminal Type ID	Terminated Lead	Diagnostic Test Probe	Terminal Removal Tool
I	Not required	J-35616-14 (GN)	No Tool Required

T8E Ignition Coil 5 (L84 / L87)

Pin	Size	Color	Circuit	Function	Terminal Type ID	Option
(1) 1	(1) 1	(1) BK	(1) 6150	(1) Engine Odd Bank Ground	(1) I	(1) —
(2) 2	(2) 0.5	(2) BK / BU	(2) 2129	(2) Ignition Control Low Reference Bank 1	(2) I	(2) —
(3) 3	(3) 0.5	(3) BU / GY	(3) 2125	(3) Ignition Control 5	(3) I	(3) —
(4) 4	(4) 1	(4) VT / BU	(4) 5291	(4) Powertrain Main Relay Fused Supply Voltage 2	(4) I	(4) —

T8F Ignition Coil 6 (L84 / L87)

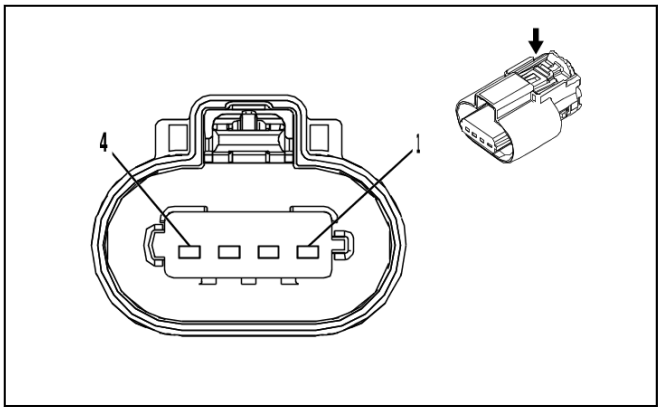

3240115

Connector Part Information

- Harness Type: Engine Wiring Harness
- OEM Connector: 34770-0402
- Service Connector: Service by Harness - See Part Catalog
- Description: 4-Way F 1.5 MX Series, Sealed(BK)

Terminal Part Information

Terminal Type ID	Terminated Lead	Diagnostic Test Probe	Terminal Removal Tool
I	Not required	J-35616-14 (GN)	No Tool Required

T8F Ignition Coil 6 (L84 / L87)

Pin	Size	Color	Circuit	Function	Terminal Type ID	Option
(1) 1	(1) 1	(1) BK	(1) 6450	(1) Engine Even Bank Ground	(1) I	(1) —
(2) 2	(2) 0.75	(2) BK / GY	(2) 2130	(2) Ignition Control Low Reference Bank 2	(2) I	(2) —
(3) 3	(3) 0.5	(3) BN / BU	(3) 2126	(3) Ignition Control 6	(3) I	(3) —
(4) 4	(4) 1	(4) VT / BU	(4) 5292	(4) Powertrain Main Relay Fused Supply Voltage 3	(4) I	(4) —

T8G Ignition Coil 7 (L84 / L87)

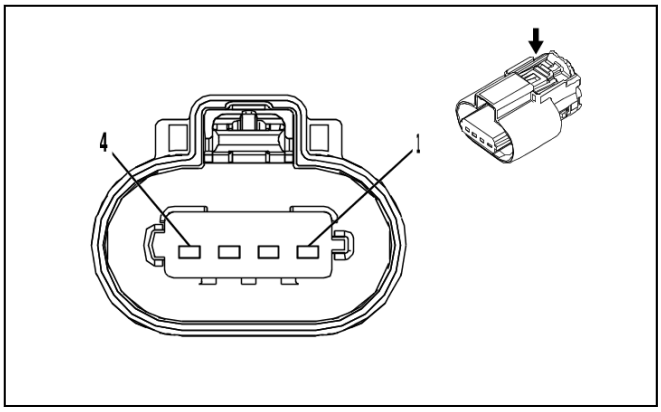

3240115

Connector Part Information

- Harness Type: Engine Wiring Harness
- OEM Connector: 34770-0402
- Service Connector: Service by Harness - See Part Catalog
- Description: 4-Way F 1.5 MX Series, Sealed(BK)

Terminal Part Information

Terminal Type ID	Terminated Lead	Diagnostic Test Probe	Terminal Removal Tool
I	Not required	J-35616-14 (GN)	No Tool Required

T8G Ignition Coil 7 (L84 / L87)

Pin	Size	Color	Circuit	Function	Terminal Type ID	Option
(1) 1	(1) 1	(1) BK	(1) 6150	(1) Engine Odd Bank Ground	(1) I	(1) —
(2) 2	(2) 0.5	(2) BK / BU	(2) 2129	(2) Ignition Control Low Reference Bank 1	(2) I	(2) —
(3) 3	(3) 0.5	(3) GN / GY	(3) 2127	(3) Ignition Control 7	(3) I	(3) —
(4) 4	(4) 1	(4) VT / BU	(4) 5291	(4) Powertrain Main Relay Fused Supply Voltage 2	(4) I	(4) —

T8H Ignition Coil 8 (L84 / L87)

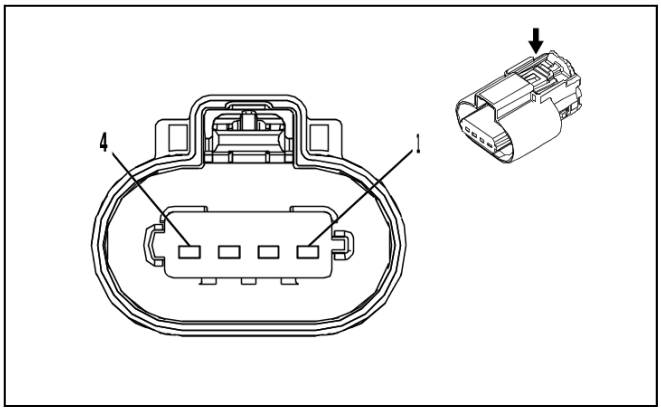

3240115

Connector Part Information

- Harness Type: Engine Wiring Harness
- OEM Connector: 34770-0402
- Service Connector: Service by Harness - See Part Catalog
- Description: 4-Way F 1.5 MX Series, Sealed(BK)

Terminal Part Information

Terminal Type ID	Terminated Lead	Diagnostic Test Probe	Terminal Removal Tool
I	Not required	J-35616-14 (GN)	No Tool Required

T8H Ignition Coil 8 (L84 / L87)

Pin	Size	Color	Circuit	Function	Terminal Type ID	Option
(1) 1	(1) 1	(1) BK	(1) 6450	(1) Engine Even Bank Ground	(1) I	(1) —
(2) 2	(2) 0.75	(2) BK / GY	(2) 2130	(2) Ignition Control Low Reference Bank 2	(2) I	(2) —
(3) 3	(3) 0.5	(3) VT / WH	(3) 2128	(3) Ignition Control 8	(3) I	(3) —
(4) 4	(4) 1	(4) VT / BU	(4) 5292	(4) Powertrain Main Relay Fused Supply Voltage 3	(4) I	(4) —

T10E Low Frequency Rear Compartment Antenna

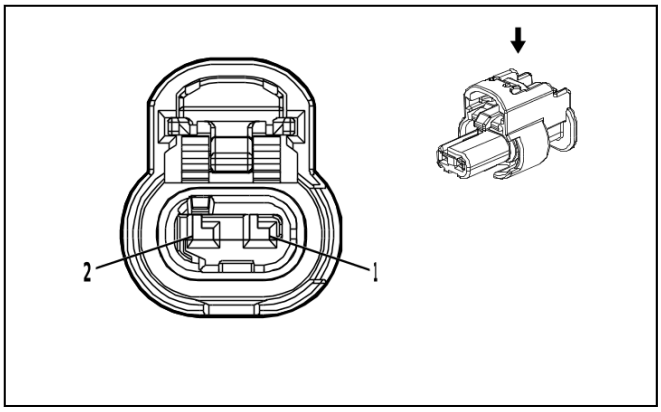

4690744

Connector Part Information
- Harness Type: Body Wiring Harness
- OEM Connector: 1-2296694-3
- Service Connector: 19366871
- Description: 2-Way F 1.2 MCON Series, Sealed(BK)

Terminal Part Information

Terminal Type ID	Terminated Lead	Diagnostic Test Probe	Terminal Removal Tool
I	Not required	J-35616-12 (BU)	No Tool Required

T10E Low Frequency Rear Compartment Antenna

Pin	Size	Color	Circuit	Function	Terminal Type ID	Option
(1) 1	(1) 0.35	(1) BU	(1) 3554	(1) Interior Passive Entry Antenna 2 High Signal	(1) I	(1) —
(2) 2	(2) 0.35	(2) GY / BK	(2) 3555	(2) Interior Passive Entry Antenna 2 Low Signal	(2) I	(2) —

T10G Low Frequency Rear Bumper Antenna

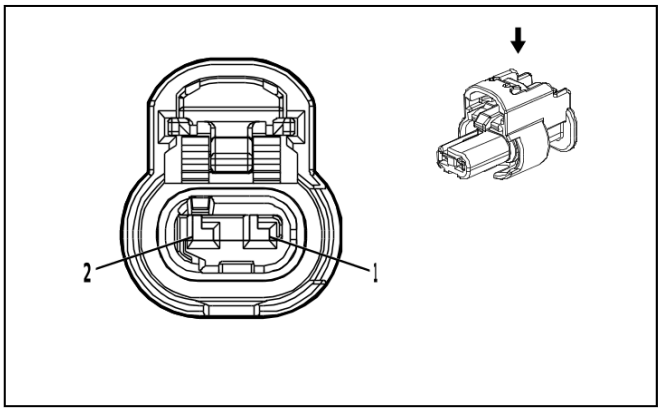

4690744

Connector Part Information
- Harness Type: Rear Object Alarm Sensor Wiring Harness
- OEM Connector: 1-2296694-3
- Service Connector: Service by Harness - See Part Catalog
- Description: 2-Way F 1.2 MCON Series, Sealed(BK)

Terminal Part Information

Terminal Type ID	Terminated Lead	Diagnostic Test Probe	Terminal Removal Tool
I	Not required	J-35616-12 (BU)	No Tool Required

T10G Low Frequency Rear Bumper Antenna

Pin	Size	Color	Circuit	Function	Terminal Type ID	Option
(1) 1	(1) 0.5	(1) BN / GN	(1) 3568	(1) Rear Closure Passive Entry Antenna High Signal	(1) I	(1) —
(2) 2	(2) 0.5	(2) GN / GY	(2) 3569	(2) Rear Closure Passive Entry Antenna Low Signal	(2) I	(2) —

T10J Low Frequency Instrument Panel Antenna (5W4 / 9C1 / AZ3)

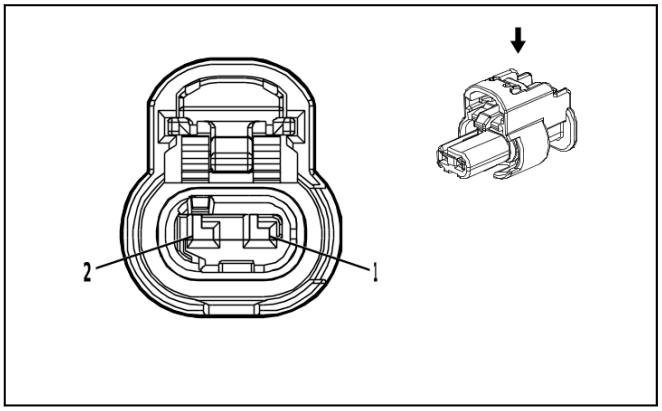

4690744

Connector Part Information

- Harness Type: Instrument Panel Wiring Harness
- OEM Connector: 1-2296694-3
- Service Connector: 19366871
- Description: 2-Way F 1.2 MCON Series, Sealed(BK)

Terminal Part Information

Terminal Type ID	Terminated Lead	Diagnostic Test Probe	Terminal Removal Tool
I	Not required	J-35616-12 (BU)	No Tool Required

T10J Low Frequency Instrument Panel Antenna (5W4 / 9C1 / AZ3)

Pin	Size	Color	Circuit	Function	Terminal Type ID	Option
(1) 1	(1) 0.35	(1) BN / BK	(1) 3552	(1) Interior Passive Entry Antenna 1 High Signal	(1) I	(1) —
(2) 2	(2) 0.35	(2) WH	(2) 3553	(2) Interior Passive Entry Antenna 1 Low Signal	(2) I	(2) —

T10JA Low Frequency Instrument Panel Number 2 Antenna ((DCH / DCK) / (D07 - (5W4 / 9C1)))

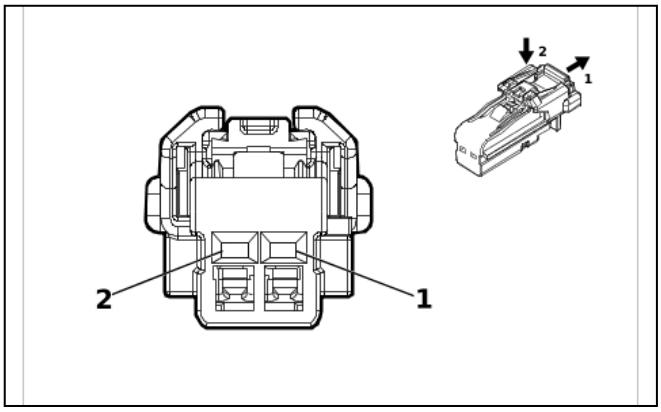

4115691

Connector Part Information
- Harness Type: Instrument Panel Wiring Harness
- OEM Connector: 6098-8988
- Service Connector: 87816612
- Description: 2-Way F 1.2 MCON Series(BK)

Terminal Part Information

Terminal Type ID	Terminated Lead	Diagnostic Test Probe	Terminal Removal Tool
I	Not required	J-35616-12 (BU)	No Tool Required

T10JA Low Frequency Instrument Panel Number 2 Antenna ((DCH / DCK) / (D07 - (5W4 / 9C1)))

Pin	Size	Color	Circuit	Function	Terminal Type ID	Option
(1) 1	(1) 0.35	(1) BN / BK	(1) 4996	(1) Immobilizer Antenna Signal [+]	(1) I	(1) —
(2) 2	(2) 0.35	(2) WH / GY	(2) 4997	(2) Immobilizer Antenna Low Signal	(2) I	(2) —

T10KA Low Frequency Console Number 2 Antenna

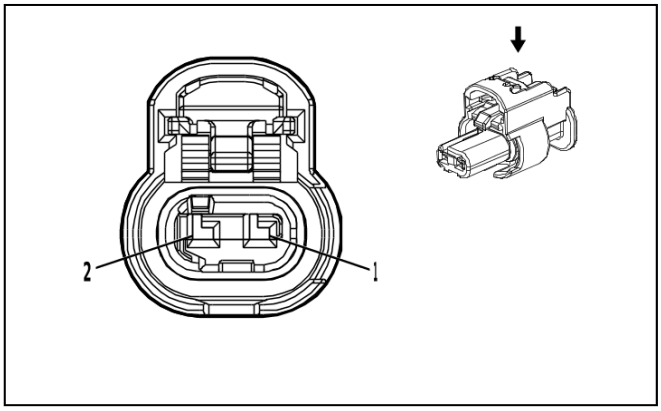

4690744

Connector Part Information
- Harness Type: Front Floor Console Wiring Harness
- OEM Connector: 1-2296694-3
- Service Connector: Service by Harness - See Part Catalog
- Description: 2-Way F 1.2 MCON Series, Sealed(BK)

Terminal Part Information

Terminal Type ID	Terminated Lead	Diagnostic Test Probe	Terminal Removal Tool
I	Not required	J-35616-16 (L-GN)	No Tool Required

T10KA Low Frequency Console Number 2 Antenna

Pin	Size	Color	Circuit	Function	Terminal Type ID	Option
(1) 1	(1) 0.35	(1) BN / BK	(1) 3552	(1) Interior Passive Entry Antenna 1 High Signal	(1) I	(1) —
(2) 2	(2) 0.35	(2) WH	(2) 3553	(2) Interior Passive Entry Antenna 1 Low Signal	(2) I	(2) —

T10L Low Frequency Body Side Antenna - Left

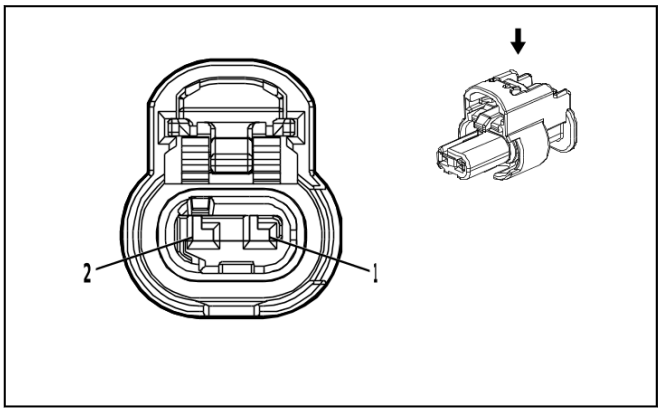

4690744

Connector Part Information

- Harness Type: Rear Side Door Door Wiring Harness - Left
- OEM Connector: 1-2296694-3
- Service Connector: Service by Harness - See Part Catalog
- Description: 2-Way F 1.2 MCON Series, Sealed(BK)

Terminal Part Information

Terminal Type ID	Terminated Lead	Diagnostic Test Probe	Terminal Removal Tool
I	Not required	J-35616-12 (BU)	No Tool Required

T10L Low Frequency Body Side Antenna - Left

Pin	Size	Color	Circuit	Function	Terminal Type ID	Option
(1) 1	(1) 0.5	(1) VT	(1) 4301	(1) Passive Entry Left Antenna Signal High	(1) I	(1) —
(2) 2	(2) 0.5	(2) VT / GY	(2) 4302	(2) Passive Entry Left Antenna Signal Low	(2) I	(2) —

T10R Low Frequency Body Side Antenna - Right

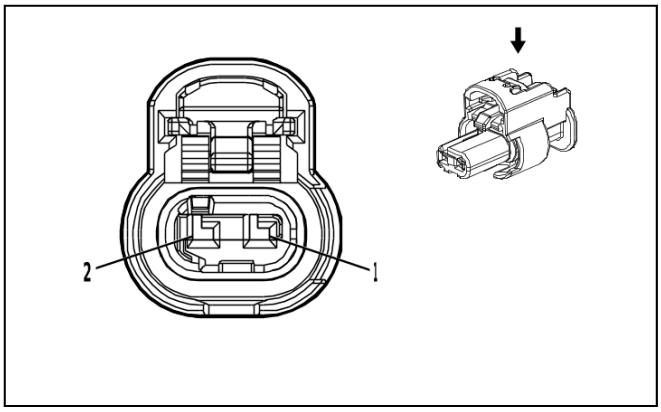

4690744

Connector Part Information
- Harness Type: Rear Side Door Door Wiring Harness - Right
- OEM Connector: 1-2296694-3
- Service Connector: Service by Harness - See Part Catalog
- Description: 2-Way F 1.2 MCON Series, Sealed(BK)

Terminal Part Information

Terminal Type ID	Terminated Lead	Diagnostic Test Probe	Terminal Removal Tool
I	Not required	J-35616-12 (BU)	No Tool Required

T10R Low Frequency Body Side Antenna - Right

Pin	Size	Color	Circuit	Function	Terminal Type ID	Option
(1) 1	(1) 0.5	(1) GN / YE	(1) 4303	(1) Passive Entry Right Antenna Signal High	(1) I	(1) —
(2) 2	(2) 0.5	(2) GN / BK	(2) 4304	(2) Passive Entry Right Antenna Signal Low	(2) I	(2) —

T10U Low Frequency Console Antenna - Front (- AZ3)

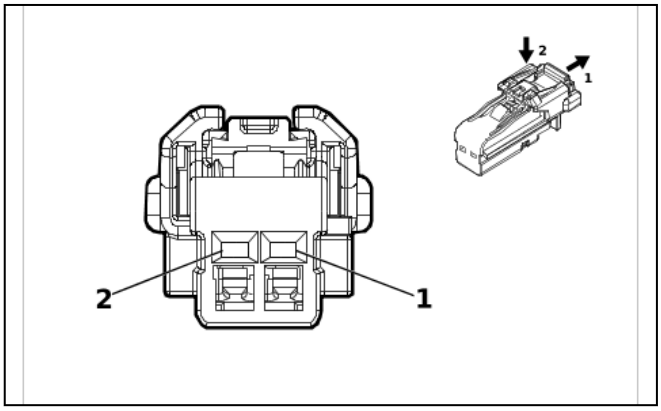

4115691

Connector Part Information
- Harness Type: Front Floor Console Wiring Harness
- OEM Connector: 6098-8988
- Service Connector: Service by Harness - See Part Catalog
- Description: 2-Way F 1.2 MCON Series(BK)

Terminal Part Information

Terminal Type ID	Terminated Lead	Diagnostic Test Probe	Terminal Removal Tool
I	Not required	J-35616-12 (BU)	No Tool Required
II	Not required	J-35616-16 (L-GN)	No Tool Required

T10U Low Frequency Console Antenna - Front (- AZ3)

Pin	Size	Color	Circuit	Function	Terminal Type ID	Option
(1) 1	(1) 0.35 (1) 0.35	(1) BN / BK (1) BN / BK	(1) 4996 (1) 4996	(1) Immobilizer Antenna Signal [+] (1) Immobilizer Antenna Signal [+]	(1) II (1) I	(1) D07 (1) DCH
(2) 2	(2) 0.35 (2) 0.35	(2) WH / GY (2) WH / GY	(2) 4997 (2) 4997	(2) Immobilizer Antenna Low Signal (2) Immobilizer Antenna Low Signal	(2) II (2) I	(2) D07 (2) DCH

T10U Low Frequency Console Antenna - Front (AZ3)

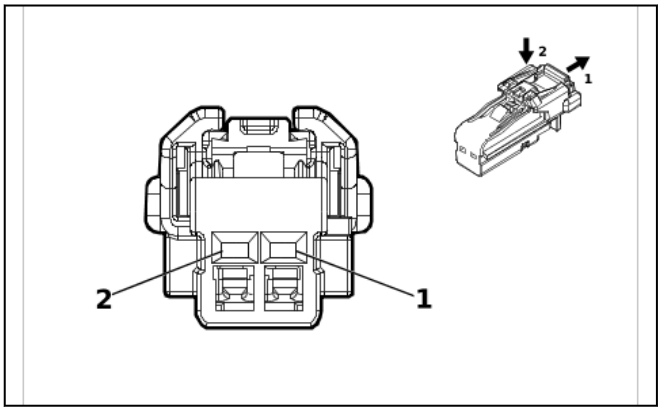

4115691

Connector Part Information

- Harness Type: Front Seat Wiring Harness - Center
- OEM Connector: 6098-8988
- Service Connector: Service by Harness - See Part Catalog
- Description: 2-Way F 1.2 MCON Series(BK)

Terminal Part Information

Terminal Type ID	Terminated Lead	Diagnostic Test Probe	Terminal Removal Tool
I	Not required	J-35616-12 (BU)	No Tool Required

T10U Low Frequency Console Antenna - Front (AZ3)

Pin	Size	Color	Circuit	Function	Terminal Type ID	Option
(1) 1	(1) 0.35	(1) BN / BK	(1) 4996	(1) Immobilizer Antenna Signal [+]	(1) I	(1) DCH
(2) 2	(2) 0.35	(2) WH / GY	(2) 4997	(2) Immobilizer Antenna Low Signal	(2) I	(2) DCH

T12 Automatic Transmission X1

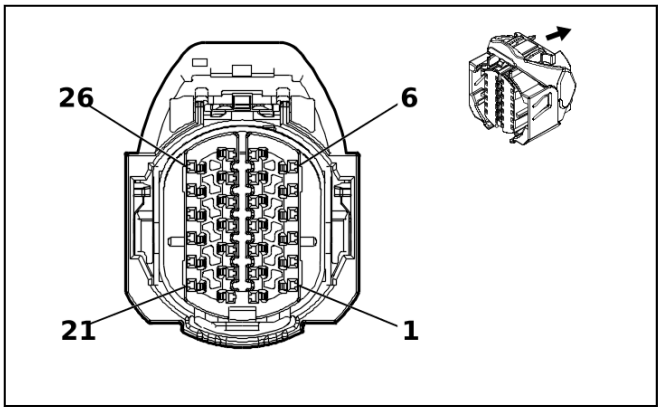

5275597

Connector Part Information

- Harness Type: Engine Wiring Harness
- OEM Connector: 2327375-1
- Service Connector: 13528029
- Description: 26-Way F 1.2 MCON Series, Sealed(BK)

Terminal Part Information

Terminal Type ID	Terminated Lead	Diagnostic Test Probe	Terminal Removal Tool
I	19331733	J-35616-12 (BU)	J-38125-553

T12 Automatic Transmission X1

Pin	Size	Color	Circuit	Function	Terminal Type ID	Option
(1) 1	(1) 0.5	(1) GN / YE	(1) 6353	(1) Input Speed Signal	(1) I	(1) —
(2) 2	(2) 0.5	(2) GN / VT	(2) 4510	(2) Transmission Intermediate Speed Signal	(2) I	(2) —
(3) 3	(3) 0.5	(3) BN / BU	(3) 6254	(3) Transmission Input Speed Sensor Signal	(3) I	(3) —
(4) 4	(4) 0.5	(4) GY / BU	(4) 6358	(4) Output Speed Signal	(4) I	(4) —
(5) 5	(5) 0.5	(5) WH / YE	(5) 6317	(5) Electronic Transmission Range Select Out of Park Switch Signal	(5) I	(5) —
(6) 6	(6) 0.5	(6) VT / WH	(6) 6319	(6) Electronic Transmission Range Select Out of Park Switch 2 Signal	(6) I	(6) —
(7) 7	(7) 0.5	(7) YE / GN	(7) 4170	(7) Transmission Output Shaft Speed Sensor Circuit 9V Reference	(7) I	(7) —
(8) 8	(8) 0.5	(8) YE / BU	(8) 4171	(8) Transmission Input Shaft Speed Sensor Circuit 9V Reference	(8) I	(8) —
(9) 9	(9) 0.5	(9) GY / BN	(9) 6388	(9) Transmission High Side Driver 2 Control	(9) I	(9) —
(10) 10	(10) 0.75	(10) RD / VT	(10) 7940	(10) Battery Positive Voltage	(10) I	(10) —
(11) 11	(11) 0.5	(11) GN / GY	(11) 6387	(11) Transmission High Side Driver 1 Control	(11) I	(11) —
(12) 12	(12) 0.5	(12) YE	(12) 2159	(12) Park Inhibit Solenoid Assembly Control	(12) I	(12) —
(13) 13	(13) 0.5	(13) BN / WH	(13) 585	(13) Transmission Fluid Temperature Sensor Signal	(13) I	(13) —

Pin	Size	Color	Circuit	Function	Terminal Type ID	Option
(14) 14	(14) 0.5	(14) YE / BN	(14) 6404	(14) Clutch Solenoid Valve E Control	(14) I	(14) —
(15) 15	(15) 0.5	(15) GY / GN	(15) 6403	(15) Clutch Solenoid Valve D Control	(15) I	(15) —
(16) 16	(16) 0.5	(16) GY	(16) 6402	(16) Clutch Solenoid Valve C Control	(16) I	(16) —
(17) 17	(17) 0.75	(17) BK	(17) 6550	(17) Ground	(17) I	(17) —
(18) 18	(18) 0.5	(18) GN	(18) 2968	(18) Transmission Auxiliary Fluid Pump Control	(18) I	(18) —
(19) 19	(19) 0.5	(19) GN / BK	(19) 7819	(19) Default Disable Solenoid Control	(19) I	(19) —
(20) 20	(20) 0.5	(20) BN	(20) 3706	(20) Electronic Transmission Range Select Switch Analog Signal 1	(20) I	(20) —
(21) 21	(21) 0.5	(21) VT	(21) 4509	(21) Transmission Clutch F Control	(21) I	(21) —
(22) 22	(22) 0.5	(22) WH / BU	(22) 4507	(22) Transmission Clutch H Control	(22) I	(22) —
(23) 23	(23) 0.5	(23) WH	(23) 4508	(23) Transmission Clutch G Control	(23) I	(23) —
(24) 24	(24) 0.5	(24) GN / WH	(24) 1530	(24) Transmission Line Pressure Control Solenoid Valve Control	(24) I	(24) —
(25) 25	(25) 0.5	(25) VT / WH	(25) 422	(25) Torque Converter Clutch Solenoid Valve Control	(25) I	(25) —
(26) 26	(26) 0.5	(26) BK / BN	(26) 586	(26) Transmission Fluid Temperature Sensor Low Reference	(26) I	(26) —

T12 Automatic Transmission X2

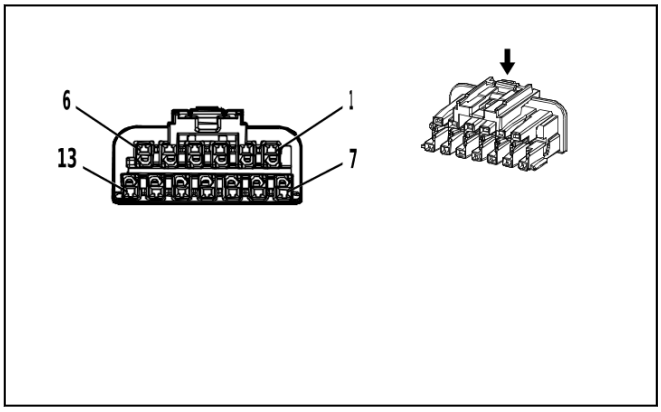

4757907

Connector Part Information

- Harness Type: Automatic Transmission Wiring Harness
- OEM Connector: 2203990-1
- Service Connector: Service by Harness - See Part Catalog
- Description: 13-Way F 1.2 MCON Series(BN)

Terminal Part Information

Terminal Type ID	Terminated Lead	Diagnostic Test Probe	Terminal Removal Tool
I	Not required	J-35616-12 (BU)	No Tool Required
II	Not required	J-35616-16 (L-GN)	No Tool Required

T12 Automatic Transmission X2

Pin	Size	Color	Circuit	Function	Terminal Type ID	Option
(1) 1	(1) 0.5	(1) YE / GY	(1) 6319	(1) Electronic Transmission Range Select Out of Park Switch 2 Signal	(1) II	(1) —
(2) 2	(2) 0.5	(2) YE	(2) 6317	(2) Electronic Transmission Range Select Out of Park Switch Signal	(2) II	(2) —
(3) 3	(3) 0.5	(3) YE / OG	(3) 6358	(3) Output Speed Signal	(3) I	(3) —
(4) 4	(4) 0.5	(4) WH / BU	(4) 6254	(4) Transmission Input Speed Sensor Signal	(4) I	(4) —
(5) 5	(5) 0.5	(5) VT / GN	(5) 4510	(5) Transmission Intermediate Speed Signal	(5) I	(5) —
(6) 6	(6) 0.5	(6) WH / VT	(6) 6353	(6) Input Speed Signal	(6) I	(6) —
(7) 7	(7) 0.5	(7) BN / YE	(7) 585	(7) Transmission Fluid Temperature Sensor Signal	(7) I	(7) —
(8) 8	(8) 0.5	(8) OG	(8) 2159	(8) Park Inhibit Solenoid Assembly Control	(8) I	(8) —
(9) 9	(9) 0.5	(9) BN	(9) 6387	(9) Transmission High Side Driver 1 Control	(9) I	(9) —
(10) 10	(10) 0.5	(10) GN / VT	(10) 8640	(10) Battery Positive Voltage	(10) I	(10) —
(11) 11	(11) 0.5	(11) WH	(11) 6388	(11) Transmission High Side Driver 2 Control	(11) I	(11) —
(12) 12	(12) 0.5	(12) BU	(12) 4171	(12) Transmission Input Shaft Speed Sensor Circuit 9V Reference	(12) I	(12) —
(13) 13	(13) 0.5	(13) GN	(13) 4170	(13) Transmission Output Shaft Speed Sensor Circuit 9V Reference	(13) I	(13) —

T12 Automatic Transmission X3

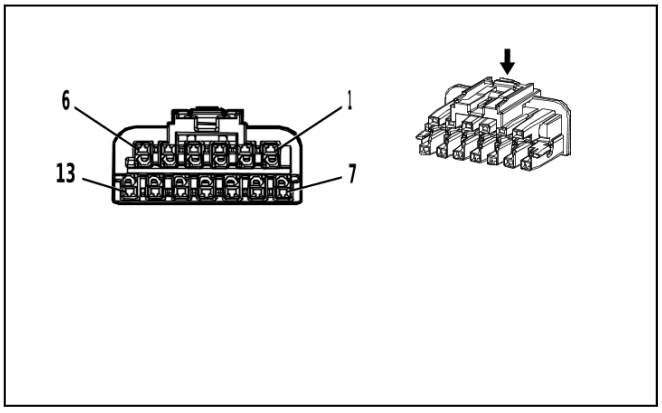

4757999

Connector Part Information

- Harness Type: Automatic Transmission Wiring Harness
- OEM Connector: 2203990-2
- Service Connector: Service by Harness - See Part Catalog
- Description: 13-Way F 1.2 MCON Series(BN)

Terminal Part Information

Terminal Type ID	Terminated Lead	Diagnostic Test Probe	Terminal Removal Tool
I	Not required	J-35616-12 (BU)	No Tool Required

T12 Automatic Transmission X3

Pin	Size	Color	Circuit	Function	Terminal Type ID	Option
(1) 1	(1) 0.5	(1) BN / WH	(1) 4509	(1) Transmission Clutch F Control	(1) I	(1) —
(2) 2	(2) 0.5	(2) YE / VT	(2) 4507	(2) Transmission Clutch H Control	(2) I	(2) —
(3) 3	(3) 0.5	(3) BU / GY	(3) 4508	(3) Transmission Clutch G Control	(3) I	(3) —
(4) 4	(4) 0.5	(4) GN / OG	(4) 1530	(4) Transmission Line Pressure Control Solenoid Valve Control	(4) I	(4) —
(5) 5	(5) 0.5	(5) GY / BN	(5) 422	(5) Torque Converter Clutch Solenoid Valve Control	(5) I	(5) —
(6) 6	(6) 0.5	(6) BU / BN	(6) 586	(6) Transmission Fluid Temperature Sensor Low Reference	(6) I	(6) —
(7) 7	(7) 0.5	(7) BU / GN	(7) 6404	(7) Clutch Solenoid Valve E Control	(7) I	(7) —
(8) 8	(8) 0.5	(8) GN / BN	(8) 6403	(8) Clutch Solenoid Valve D Control	(8) I	(8) —
(9) 9	(9) 0.5	(9) GY	(9) 6402	(9) Clutch Solenoid Valve C Control	(9) I	(9) —
(10) 10	(10) 0.5	(10) BK / YE	(10) 6550	(10) Ground	(10) I	(10) —
(11) 11	(11) 0.5	(11) GY / OG	(11) 2968	(11) Transmission Auxiliary Fluid Pump Control	(11) I	(11) —
(12) 12	(12) 0.5	(12) VT	(12) 7819	(12) Default Disable Solenoid Control	(12) I	(12) —
(13) 13	(13) 0.5	(13) BK / GY	(13) 3706	(13) Electronic Transmission Range Select Switch Analog Signal 1	(13) I	(13) —

T19 Multifunction Power Supply Converter

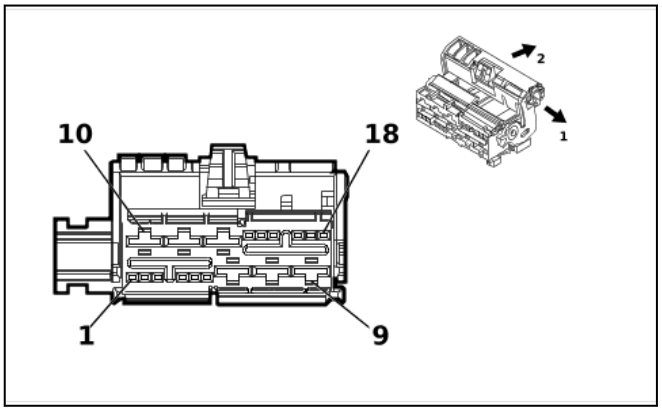

3825662

Connector Part Information

- Harness Type: Body Wiring Harness
- OEM Connector: 35509388
- Service Connector: 13549243
- Description: 18-Way F 0.64 MTS, 6.3 MCP Series(BK)

Terminal Part Information

Terminal Type ID	Terminated Lead	Diagnostic Test Probe	Terminal Removal Tool
I	19300632	J-35616-64B (L-BU)	J-38125-215A
II	19367600	J-35616-42 (RD)	J-38125-556

T19 Multifunction Power Supply Converter

Pin	Size	Color	Circuit	Function	Terminal Type ID	Option
1 - 3	—	—	—	Not Occupied	—	—
(4) 4	(4) 0.35	(4) VT / GN	(4) 4320	(4) Powertrain Sensor Bus Enable	(4) I	(4) —
(5) 5	(5) 0.35	(5) YE / BK	(5) 625	(5) Starter Enable Relay Control	(5) I	(5) —
6	—	—	—	Not Occupied	—	—
(7) 7	(7) 2.5	(7) BK	(7) 250	(7) Ground	(7) II	(7) —
(8) 8	(8) 2.5	(8) RD / YE	(8) 8140	(8) Battery Positive Voltage	(8) II	(8) —
(9) 9	(9) 2.5	(9) RD / GN	(9) 2173	(9) 12V Regulated Supply Voltage 2	(9) II	(9) —
(10) 10	(10) 2.5	(10) RD / YE	(10) 2172	(10) 12V Regulated Supply Voltage 1	(10) II	(10) —
(11) 11	(11) 2.5	(11) RD / WH	(11) 8040	(11) Battery Positive Voltage	(11) II	(11) —
(12) 12	(12) 2.5	(12) BK	(12) 250	(12) Ground	(12) II	(12) —
(13) 13	(13) 0.35	(13) BU / GY	(13) 4054	(13) Private Serial Data Powertrain CAN Bus [-] Serial Data	(13) I	(13) —
(14) 14	(14) 0.35	(14) BU / GY	(14) 4054	(14) Private Serial Data Powertrain CAN Bus [-] Serial Data	(14) I	(14) —
(15) 15	(15) 0.35	(15) WH	(15) 4055	(15) Private Serial Data Powertrain CAN Bus [+] Serial Data	(15) I	(15) —
(16) 16	(16) 0.35	(16) WH	(16) 4055	(16) Private Serial Data Powertrain CAN Bus [+] Serial Data	(16) I	(16) —
17 - 18	—	—	—	Not Occupied	—	—

T22 Wireless Accessory Charging Module (K7A)

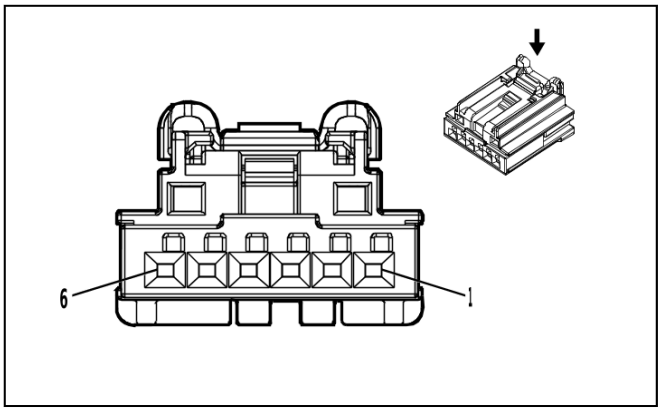

5020940

Connector Part Information

- Harness Type: Front Floor Console Wiring Harness
- OEM Connector: 2035363-6
- Service Connector: Service by Harness - See Part Catalog
- Description: 6-Way F 0.64 Generation Y Series(BK)

Terminal Part Information

Terminal Type ID	Terminated Lead	Diagnostic Test Probe	Terminal Removal Tool
I	Not required	J-35616-64B (L-BU)	No Tool Required

T22 Wireless Accessory Charging Module (K7A)

Pin	Size	Color	Circuit	Function	Terminal Type ID	Option
(1) 1	(1) 0.75	(1) RD / VT	(1) 6340	(1) Battery Positive Voltage	(1) I	(1) —
(2) 2	(2) 0.75	(2) BK	(2) 1250	(2) Ground	(2) I	(2) —
(3) 3	(3) 0.35	(3) BU / YE	(3) 4984	(3) AUTOSAR CAN Bus [-] 5 Serial Data	(3) I	(3) —
(4) 4	(4) 0.35	(4) BU / WH	(4) 4985	(4) AUTOSAR CAN Bus [+] 5 Serial Data	(4) I	(4) —
(5) 5	(5) 0.35	(5) BU / YE	(5) 4984	(5) AUTOSAR CAN Bus [-] 5 Serial Data	(5) I	(5) —
(6) 6	(6) 0.35	(6) BU / WH	(6) 4985	(6) AUTOSAR CAN Bus [+] 5 Serial Data	(6) I	(6) —

T35AF Radio Antenna Amplifier - AM/FM X1 (- U2Q)

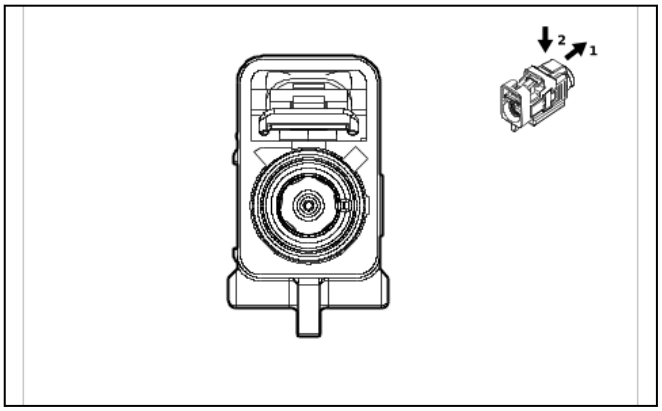

6186584

Connector Part Information

- Harness Type: Antenna Coaxial Cable COAX
- OEM Connector: 13545975
- Service Connector: Service by Cable Assembly — See Part Catalog
- Description: 1-Way F Coax Type(BK)

Terminal Part Information

Terminal Type ID	Terminated Lead	Diagnostic Test Probe	Terminal Removal Tool
I	Not required	No Tool Required	No Tool Required

T35AF Radio Antenna Amplifier - AM/FM X1 (- U2Q)

Pin	Size	Color	Circuit	Function	Terminal Type ID	Option
—	—	Coax Cable	—	(AM/FM) Antenna RF Signal	I	—

T35AF Radio Antenna Amplifier - AM/FM X2 (- U2Q)

—

Connector Part Information
- Harness Type: Antenna Cable - Rear Spoiler
- OEM Connector: Not Available
- Service Connector: Service by Harness - See Part Catalog
- Description: 1-Way

Terminal Part Information

Terminal Type ID	Terminated Lead	Diagnostic Test Probe	Terminal Removal Tool
I	Not required	No Tool Required	No Tool Required

T35AF Radio Antenna Amplifier - AM/FM X2 (- U2Q)

Pin	Size	Color	Circuit	Function	Terminal Type ID	Option
(1) 1	(1) —	(1) BK	(1) 6001	(1) Coaxial Antenna RF Signal	(1) I	(1) —

T35FD Radio Antenna Amplifier - FM2/DAB X1 (U2Q)

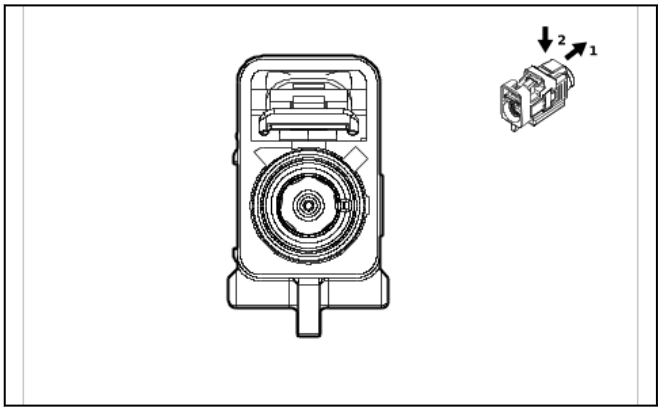

6186584

Connector Part Information
- Harness Type: Antenna Coaxial Cable COAX
- OEM Connector: 13545975
- Service Connector: Service by Cable Assembly — See Part Catalog
- Description: 1-Way F Coax Type(BK)

Terminal Part Information

Terminal Type ID	Terminated Lead	Diagnostic Test Probe	Terminal Removal Tool
I	Not required	No Tool Required	No Tool Required

T35FD Radio Antenna Amplifier - FM2/DAB X1 (U2Q)

Pin	Size	Color	Circuit	Function	Terminal Type ID	Option
—	—	Coax Cable	—	(AM/FM) Antenna RF Signal	I	—

T35FD Radio Antenna Amplifier - FM2/DAB X2 (U2Q)

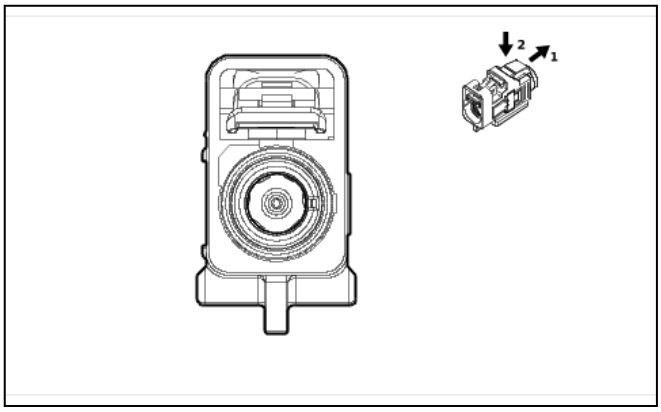

6186774

Connector Part Information
- Harness Type: Antenna Coaxial Cable COAX
- OEM Connector: 13545979
- Service Connector: Service by Cable Assembly — See Part Catalog
- Description: 1-Way F Coax Type(GN)

Terminal Part Information

Terminal Type ID	Terminated Lead	Diagnostic Test Probe	Terminal Removal Tool
I	Not required	No Tool Required	No Tool Required

T35FD Radio Antenna Amplifier - FM2/DAB X2 (U2Q)

Pin	Size	Color	Circuit	Function	Terminal Type ID	Option
—	—	Coax Cable	—	(DAB/DMB) Coaxial Antenna DAB Signal	I	—

T35FD Radio Antenna Amplifier - FM2/DAB X3 (U2Q)

—

Connector Part Information
- Harness Type: Antenna Cable - Rear Spoiler
- OEM Connector: Not Available
- Service Connector: Service by Harness - See Part Catalog
- Description: 1-Way

Terminal Part Information

Terminal Type ID	Terminated Lead	Diagnostic Test Probe	Terminal Removal Tool
I	Not required	No Tool Required	No Tool Required

T35FD Radio Antenna Amplifier - FM2/DAB X3 (U2Q)

Pin	Size	Color	Circuit	Function	Terminal Type ID	Option
(1) 1	(1) —	(1) BK	(1) 6001	(1) Coaxial Antenna RF Signal	(1) I	(1) —

X20 Card Reader Receptacle X1

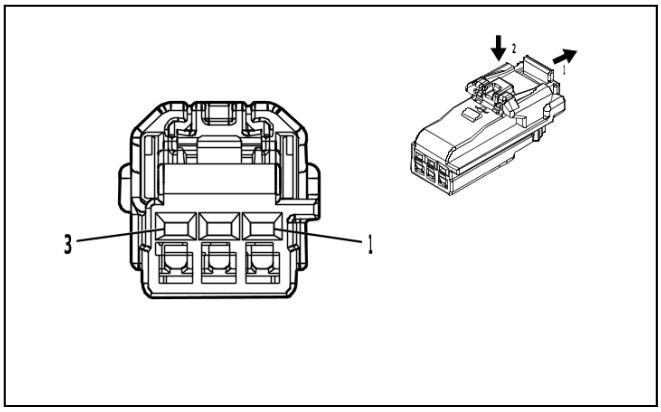

4971604

Connector Part Information

- Harness Type: Instrument Panel Wiring Harness
- OEM Connector: 6098-8153
- Service Connector: 84644600
- Description: 3-Way F 1.2 MCON Series(BK)

Terminal Part Information

Terminal Type ID	Terminated Lead	Diagnostic Test Probe	Terminal Removal Tool
I	Not required	J-35616-16 (L-GN)	No Tool Required

X20 Card Reader Receptacle X1

Pin	Size	Color	Circuit	Function	Terminal Type ID	Option
(1) 1	(1) 0.5	(1) RD / GY	(1) 4140	(1) Battery Positive Voltage	(1) I	(1) —
2	—	—	—	Not Occupied	—	—
(3) 3	(3) 0.5	(3) BK / WH	(3) 1451	(3) Signal Ground	(3) I	(3) —

X20 Card Reader Receptacle X2

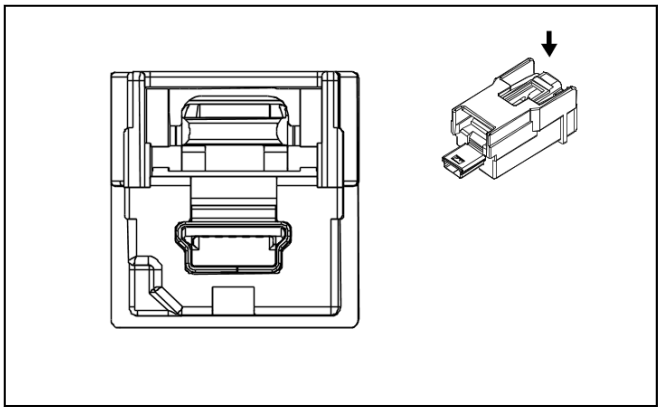

2807491

Connector Part Information
- Harness Type: Instrument Panel Wiring Harness USB
- OEM Connector: 111014-9001
- Service Connector: Service by Cable Assembly — See Part Catalog
- Description: 5-Way M 2.0 Mini-B USB Type(GY)

Terminal Part Information

Terminal Type ID	Terminated Lead	Diagnostic Test Probe	Terminal Removal Tool
I	Not required	No Tool Required	No Tool Required

X20 Card Reader Receptacle X2

Pin	Size	Color	Circuit	Function	Terminal Type ID	Option
—	—	USB	—	USB Serial Data	I	—

X23 Multimedia Receptacle X1

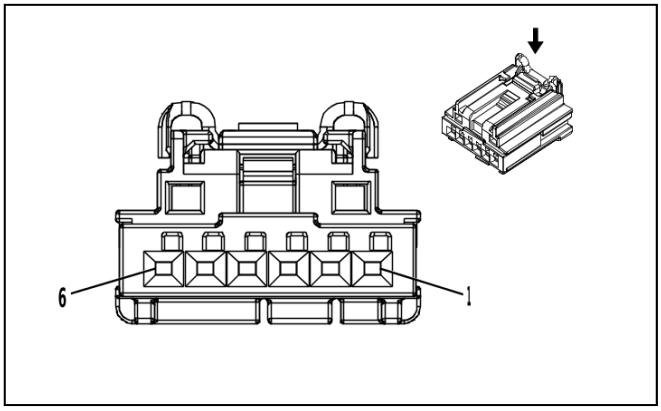

3960313

Connector Part Information
- Harness Type: Front Floor Console Wiring Harness
- OEM Connector: 2035363-4
- Service Connector: Service by Harness - See Part Catalog
- Description: 6-Way F 0.64 Generation Y Series(BK)

Terminal Part Information

Terminal Type ID	Terminated Lead	Diagnostic Test Probe	Terminal Removal Tool
I	Not required	J-35616-64B (L-BU)	No Tool Required

X23 Multimedia Receptacle X1

Pin	Size	Color	Circuit	Function	Terminal Type ID	Option
(1) 1	(1) 0.5	(1) RD / YE	(1) 2340	(1) Battery Positive Voltage	(1) I	(1) —
(2) 2	(2) 0.5	(2) YE	(2) 6817	(2) LED Backlight Dimming Control 1	(2) I	(2) —
(3) 3	(3) 0.5	(3) BK / WH	(3) 1451	(3) Signal Ground	(3) I	(3) —
4 - 6	—	—	—	Not Occupied	—	—

X23 Multimedia Receptacle X2

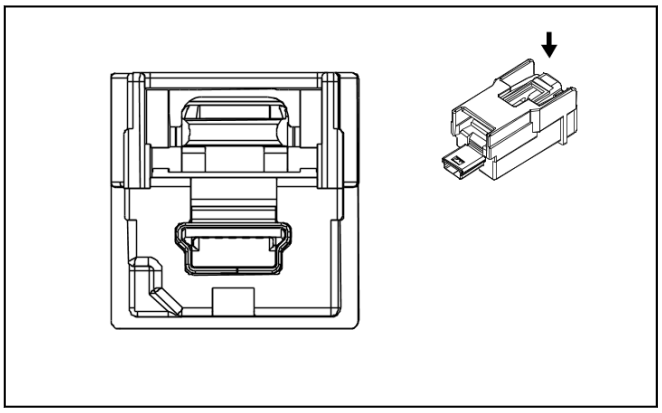

2807491

Connector Part Information

- Harness Type: Front Floor Console Wiring Harness USB
- OEM Connector: 111014-9001
- Service Connector: Service by Cable Assembly — See Part Catalog
- Description: 5-Way M 2.0 Mini-B USB Type(GY)

Terminal Part Information

Terminal Type ID	Terminated Lead	Diagnostic Test Probe	Terminal Removal Tool
I	Not required	No Tool Required	No Tool Required

X23 Multimedia Receptacle X2

Pin	Size	Color	Circuit	Function	Terminal Type ID	Option
—	—	USB	—	USB Serial Data	I	—

X23 Multimedia Receptacle X3

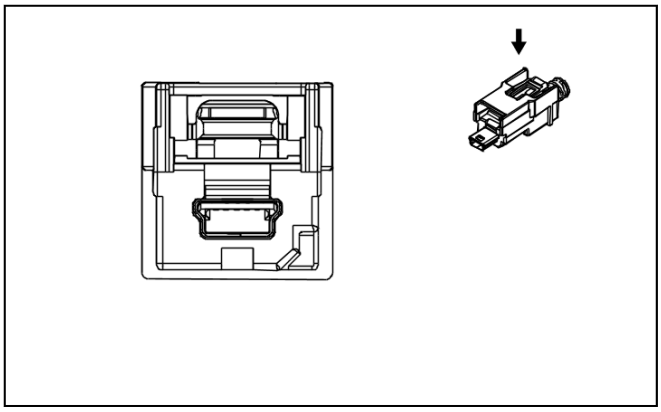

2807425

Connector Part Information
- Harness Type: Front Floor Console Wiring Harness USB
- OEM Connector: 13868727
- Service Connector: Service by Cable Assembly — See Part Catalog
- Description: 5-Way M 2.0 Mini-B USB Type(BK)

Terminal Part Information

Terminal Type ID	Terminated Lead	Diagnostic Test Probe	Terminal Removal Tool
I	Not required	No Tool Required	No Tool Required

X23 Multimedia Receptacle X3

Pin	Size	Color	Circuit	Function	Terminal Type ID	Option
—	—	USB	—	USB Serial Data	I	—

X81ACA Front Floor Console Accessory Power Rear Receptacle - 110V AC (KI4 - AZ3)

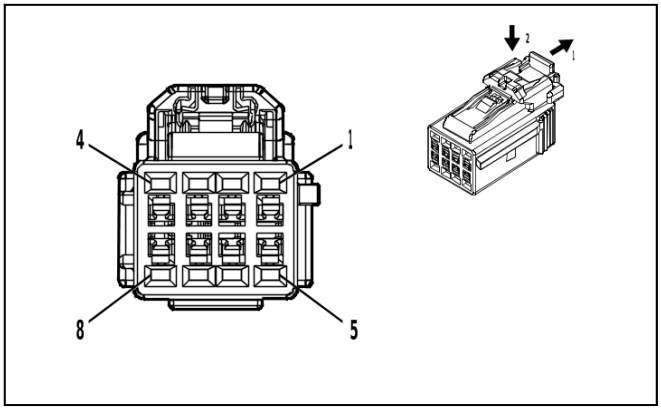

5086387

Connector Part Information
- Harness Type: Front Floor Console Wiring Harness
- OEM Connector: 6098-8443
- Service Connector: Service by Harness - See Part Catalog
- Description: 8-Way F 1.2 Series(BK)

Terminal Part Information

Terminal Type ID	Terminated Lead	Diagnostic Test Probe	Terminal Removal Tool
I	Not required	J-35616-16 (L-GN)	No Tool Required

X81ACA Front Floor Console Accessory Power Rear Receptacle - 110V AC (KI4 - AZ3)

Pin	Size	Color	Circuit	Function	Terminal Type ID	Option
(1) 1	(1) 0.75	(1) BK	(1) 10117	(1) AC Outlet Phase A Control	(1) I	(1) —
2	—	—	—	Not Occupied	—	—
(3) 3	(3) 0.5	(3) VT / RD	(3) 4049	(3) AC Power Outlet Sensor High Reference	(3) I	(3) —
(4) 4	(4) 0.75	(4) BU / BN	(4) 6807	(4) DC/AC Inverter Control	(4) I	(4) —
(5) 5	(5) 0.75	(5) RD	(5) 10118	(5) AC Outlet Phase B Control	(5) I	(5) —
6	—	—	—	Not Occupied	—	—
(7) 7	(7) 0.75	(7) BK	(7) 1250	(7) Ground	(7) I	(7) —
(8) 8	(8) 0.5	(8) YE	(8) 6817	(8) LED Backlight Dimming Control 1	(8) I	(8) —

X81ACA Front Floor Console Accessory Power Rear Receptacle - 110V AC (KI4 & AZ3)

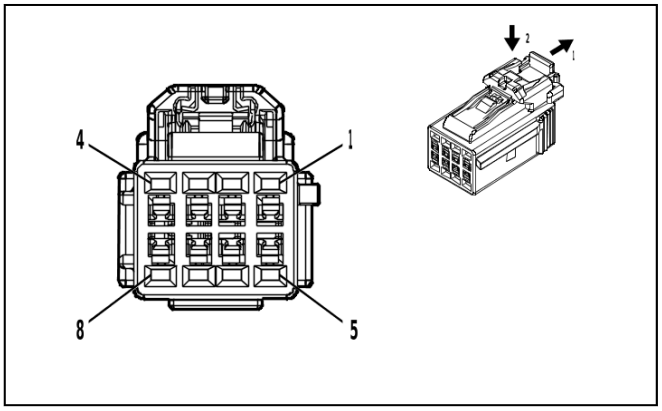

5086387

Connector Part Information

- Harness Type: Front Seat Wiring Harness - Center
- OEM Connector: 6098-8443
- Service Connector: Service by Harness - See Part Catalog
- Description: 8-Way F 1.2 Series(BK)

Terminal Part Information

Terminal Type ID	Terminated Lead	Diagnostic Test Probe	Terminal Removal Tool
I	Not required	J-35616-16 (L-GN)	No Tool Required

X81ACA Front Floor Console Accessory Power Rear Receptacle - 110V AC (KI4 & AZ3)

Pin	Size	Color	Circuit	Function	Terminal Type ID	Option
(1) 1	(1) 0.75	(1) BK	(1) 10117	(1) AC Outlet Phase A Control	(1) I	(1) —
2	—	—	—	Not Occupied	—	—

Pin	Size	Color	Circuit	Function	Terminal Type ID	Option
(3) 3	(3) 0.5	(3) VT / RD	(3) 4049	(3) AC Power Outlet Sensor High Reference	(3) I	(3) —
(4) 4	(4) 0.75	(4) BU / BN	(4) 6807	(4) DC/AC Inverter Control	(4) I	(4) —
(5) 5	(5) 0.75	(5) RD	(5) 10118	(5) AC Outlet Phase B Control	(5) I	(5) —
6	—	—	—	Not Occupied	—	—
(7) 7	(7) 0.75	(7) BK	(7) 1250	(7) Ground	(7) I	(7) —
(8) 8	(8) 0.5	(8) YE	(8) 6817	(8) LED Backlight Dimming Control 1	(8) I	(8) —

X81BCA Front Floor Console Accessory Power Rear Receptacle - 220V AC (KI5 - AZ3)

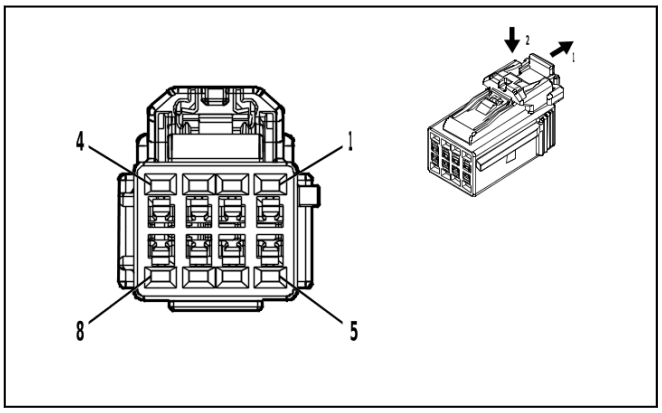

5086387

Connector Part Information

- Harness Type: Front Floor Console Wiring Harness
- OEM Connector: 6098-8443
- Service Connector: Service by Harness - See Part Catalog
- Description: 8-Way F 1.2 Series(BK)

Terminal Part Information

Terminal Type ID	Terminated Lead	Diagnostic Test Probe	Terminal Removal Tool
I	Not required	J-35616-16 (L-GN)	No Tool Required

X81BCA Front Floor Console Accessory Power Rear Receptacle - 220V AC (KI5 - AZ3)

Pin	Size	Color	Circuit	Function	Terminal Type ID	Option
(1) 1	(1) 0.75	(1) BK	(1) 10117	(1) AC Outlet Phase A Control	(1) I	(1) —
2	—	—	—	Not Occupied	—	—
(3) 3	(3) 0.5	(3) VT / RD	(3) 4049	(3) AC Power Outlet Sensor High Reference	(3) I	(3) —
(4) 4	(4) 0.75	(4) BU / BN	(4) 6807	(4) DC/AC Inverter Control	(4) I	(4) —
(5) 5	(5) 0.75	(5) RD	(5) 10118	(5) AC Outlet Phase B Control	(5) I	(5) —
6	—	—	—	Not Occupied	—	—
(7) 7	(7) 0.75	(7) BK	(7) 1250	(7) Ground	(7) I	(7) —
(8) 8	(8) 0.5	(8) YE	(8) 6817	(8) LED Backlight Dimming Control 1	(8) I	(8) —

X81BCA Front Floor Console Accessory Power Rear Receptacle - 220V AC (KI5 & AZ3)

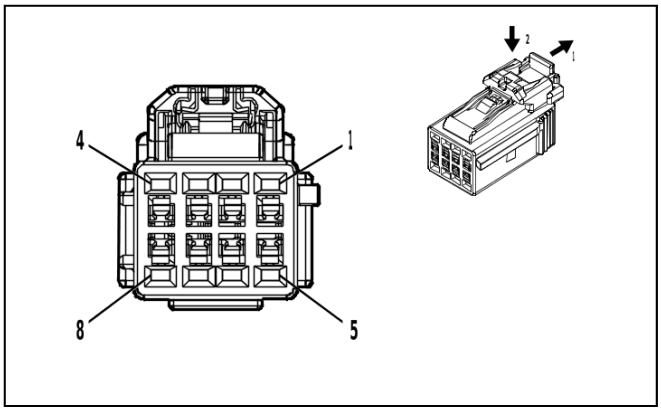

5086387

Connector Part Information

- Harness Type: Front Seat Wiring Harness - Center
- OEM Connector: 6098-8443
- Service Connector: Service by Harness - See Part Catalog
- Description: 8-Way F 1.2 Series(BK)

Terminal Part Information

Terminal Type ID	Terminated Lead	Diagnostic Test Probe	Terminal Removal Tool
I	Not required	J-35616-16 (L-GN)	No Tool Required

X81BCA Front Floor Console Accessory Power Rear Receptacle - 220V AC (KI5 & AZ3)

Pin	Size	Color	Circuit	Function	Terminal Type ID	Option
(1) 1	(1) 0.75	(1) BK	(1) 10117	(1) AC Outlet Phase A Control	(1) I	(1) —
2	—	—	—	Not Occupied	—	—
(3) 3	(3) 0.5	(3) VT / RD	(3) 4049	(3) AC Power Outlet Sensor High Reference	(3) I	(3) —
(4) 4	(4) 0.75	(4) BU / BN	(4) 6807	(4) DC/AC Inverter Control	(4) I	(4) —
(5) 5	(5) 0.75	(5) RD	(5) 10118	(5) AC Outlet Phase B Control	(5) I	(5) —
6	—	—	—	Not Occupied	—	—
(7) 7	(7) 0.75	(7) BK	(7) 1250	(7) Ground	(7) I	(7) —
(8) 8	(8) 0.5	(8) YE	(8) 6817	(8) LED Backlight Dimming Control 1	(8) I	(8) —

X81RA Quarter Lower Rear Trim Panel Accessory Power Receptacle - 110V AC (KI4)

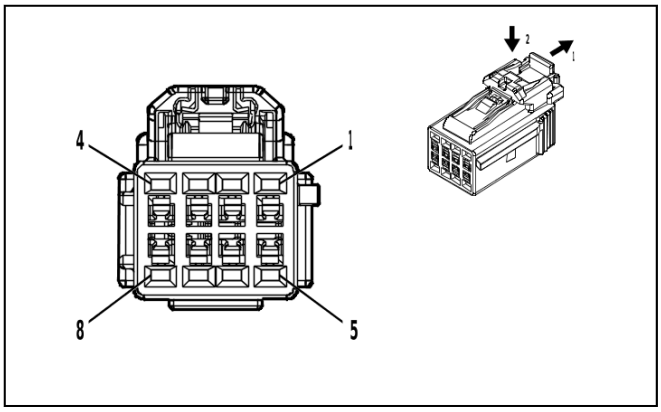

5086387

Connector Part Information

- Harness Type: Body Wiring Harness
- OEM Connector: 6098-8443
- Service Connector: 84613126
- Description: 8-Way F 1.2 Series(BK)

Terminal Part Information

Terminal Type ID	Terminated Lead	Diagnostic Test Probe	Terminal Removal Tool
I	Not required	J-35616-16 (L-GN)	No Tool Required

X81RA Quarter Lower Rear Trim Panel Accessory Power Receptacle - 110V AC (KI4)

Pin	Size	Color	Circuit	Function	Terminal Type ID	Option
(1) 1	(1) 0.5	(1) BK / WH	(1) 10120	(1) AC Outlet 2 Phase A Control	(1) I	(1) —
2	—	—	—	Not Occupied	—	—
(3) 3	(3) 0.5	(3) VT / RD	(3) 4049	(3) AC Power Outlet Sensor High Reference	(3) I	(3) —
(4) 4	(4) 0.75	(4) GN / BN	(4) 2266	(4) DC/AC Inverter Control 2	(4) I	(4) —
(5) 5	(5) 0.5	(5) RD / WH	(5) 10121	(5) AC Outlet 2 Phase B Control	(5) I	(5) —
6	—	—	—	Not Occupied	—	—
(7) 7	(7) 0.5	(7) BK	(7) 1450	(7) Ground	(7) I	(7) —
(8) 8	(8) 0.5	(8) YE	(8) 6817	(8) LED Backlight Dimming Control 1	(8) I	(8) —

X81RB Quarter Lower Rear Trim Panel Accessory Power Receptacle - 220V AC (KI5)

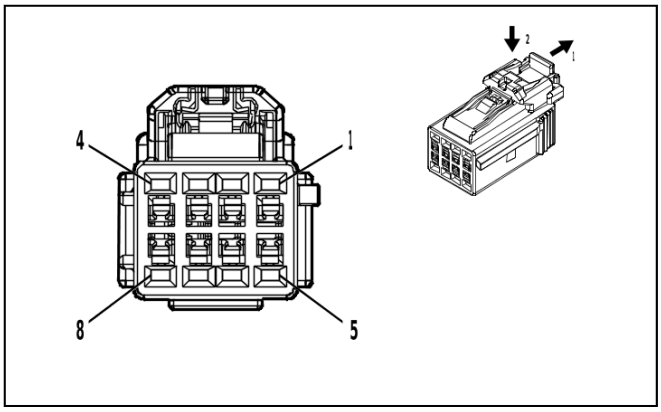

5086387

Connector Part Information

- Harness Type: Body Wiring Harness
- OEM Connector: 6098-8443
- Service Connector: 84613126
- Description: 8-Way F 1.2 Series(BK)

Terminal Part Information

Terminal Type ID	Terminated Lead	Diagnostic Test Probe	Terminal Removal Tool
I	Not required	J-35616-16 (L-GN)	No Tool Required

X81RB Quarter Lower Rear Trim Panel Accessory Power Receptacle - 220V AC (KI5)

Pin	Size	Color	Circuit	Function	Terminal Type ID	Option
(1) 1	(1) 0.5	(1) BK / WH	(1) 10120	(1) AC Outlet 2 Phase A Control	(1) I	(1) —
2	—	—	—	Not Occupied	—	—
(3) 3	(3) 0.5	(3) VT / RD	(3) 4049	(3) AC Power Outlet Sensor High Reference	(3) I	(3) —
(4) 4	(4) 0.75	(4) GN / BN	(4) 2266	(4) DC/AC Inverter Control 2	(4) I	(4) —
(5) 5	(5) 0.5	(5) RD / WH	(5) 10121	(5) AC Outlet 2 Phase B Control	(5) I	(5) —
6	—	—	—	Not Occupied	—	—
(7) 7	(7) 0.5	(7) BK	(7) 1450	(7) Ground	(7) I	(7) —
(8) 8	(8) 0.5	(8) YE	(8) 6817	(8) LED Backlight Dimming Control 1	(8) I	(8) —

X83B Audio/Video Receptacle X1 (UW9)

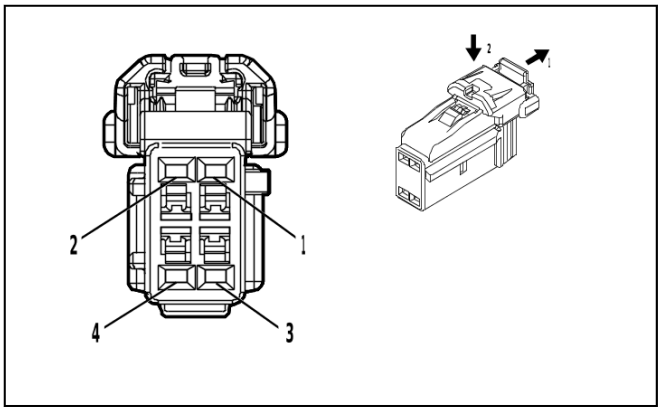

4872683

Connector Part Information

- Harness Type: Front Floor Console Wiring Harness
- OEM Connector: 6098-8435
- Service Connector: Service by Harness - See Part Catalog
- Description: 4-Way F 1.2 Series(BK)

Terminal Part Information

Terminal Type ID	Terminated Lead	Diagnostic Test Probe	Terminal Removal Tool
I	Not required	J-35616-16 (L-GN)	No Tool Required

X83B Audio/Video Receptacle X1 (UW9)

Pin	Size	Color	Circuit	Function	Terminal Type ID	Option
(1) 1	(1) 0.75 (1) 0.75	(1) RD / WH (1) RD / WH	(1) 7240 (1) 7240	(1) Battery Positive Voltage (1) Battery Positive Voltage	(1) I (1) I	(1) - UBC (1) UBC
(2) 2	(2) 0.75	(2) BK / WH	(2) 1451	(2) Signal Ground	(2) I	(2) —
(3) 3	(3) 0.5	(3) GN / YE	(3) 7066	(3) Entertainment Remote Enable Signal	(3) I	(3) —
(4) 4	(4) 0.5	(4) YE	(4) 6817	(4) LED Backlight Dimming Control 1	(4) I	(4) —

X83B Audio/Video Receptacle X3 (UW9)

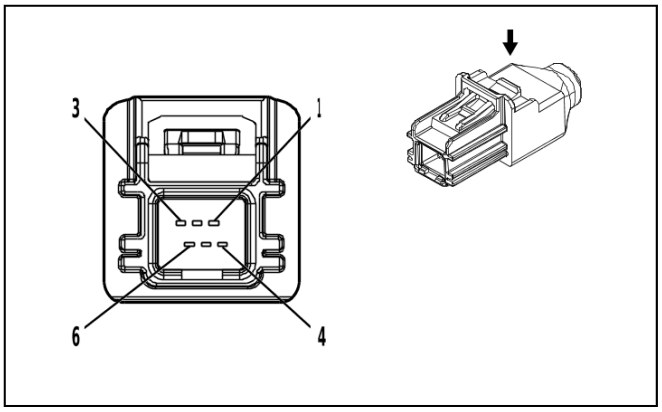

4806625

Connector Part Information
- Harness Type: Front Floor Console Wiring Harness
- OEM Connector: 100337-3097
- Service Connector: Service by Cable Assembly — See Part Catalog
- Description: 6-Way M HSAL-2 Series(BK)

Terminal Part Information

Terminal Type ID	Terminated Lead	Diagnostic Test Probe	Terminal Removal Tool
I	Not required	No Tool Required	No Tool Required

X83B Audio/Video Receptacle X3 (UW9)

Pin	Size	Color	Circuit	Function	Terminal Type ID	Option
—	—	LVDS	—	(Infotainment) Infotainment Display Signal	I	—

X84 Data Link Connector

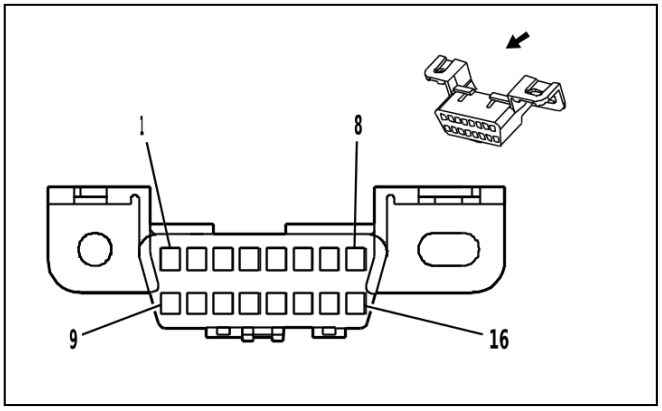

68793

Connector Part Information
- Harness Type: Instrument Panel Wiring Harness
- OEM Connector: 12110250
- Service Connector: 12110250
- Description: 16-Way F 150 Metri-Pack Series(BK)

Terminal Part Information

Terminal Type ID	Terminated Lead	Diagnostic Test Probe	Terminal Removal Tool
I	13580059	J-35616-14 (GN)	J-38125-12A
II	Service by Cable	J-35616-14 (GN)	EL-38125-560A

X84 Data Link Connector

Pin	Size	Color	Circuit	Function	Terminal Type ID	Option
(1) 1	(1) 0.35	(1) BU / BN	(1) 4983	(1) AUTOSAR CAN Bus [+] 7 Serial Data	(1) I	(1) —
(2) 2	(2) 0.35	(2) GN	(2) 2578	(2) Private Serial Data Presentation CAN Bus [+] 1 Serial Data	(2) I	(2) —
(3) 3	(3) 0.35	(3) YE / WH	(3) 4973	(3) Ethernet Bus 1R [+]	(3) II	(3) —
(4) 4	(4) 1	(4) BK	(4) 1850	(4) Ground	(4) I	(4) —
(5) 5	(5) 0.75	(5) BK / WH	(5) 1851	(5) Signal Ground	(5) I	(5) —
(6) 6	(6) 0.35	(6) YE	(6) 4981	(6) AUTOSAR CAN Bus [+] 6 Serial Data	(6) I	(6) —
(7) 7	(7) 0.35	(7) VT	(7) 2580	(7) Private Serial Data Presentation CAN Bus [+] 2 Serial Data	(7) I	(7) —
(8) 8	(8) 0.35	(8) WH	(8) 7207	(8) Ethernet Bus 1 Enable Signal	(8) I	(8) —
(9) 9	(9) 0.35	(9) WH	(9) 4982	(9) AUTOSAR CAN Bus [-] 7 Serial Data	(9) I	(9) —
(10) 10	(10) 0.35	(10) BN	(10) 2577	(10) Private Serial Data Presentation CAN Bus [-] 1 Serial Data	(10) I	(10) —
(11) 11	(11) 0.35	(11) YE	(11) 4972	(11) Ethernet Bus 1R [-]	(11) II	(11) —
(12) 12	(12) 0.35	(12) GN / WH	(12) 4975	(12) Ethernet Bus 1T [+]	(12) II	(12) —
(13) 13	(13) 0.35	(13) GN	(13) 4974	(13) Ethernet Bus 1T [-]	(13) II	(13) —
(14) 14	(14) 0.35	(14) WH	(14) 4980	(14) AUTOSAR CAN Bus [-] 6 Serial Data	(14) I	(14) —
(15) 15	(15) 0.35	(15) GY	(15) 2579	(15) Private Serial Data Presentation CAN Bus [-] 2 Serial Data	(15) I	(15) —
(16) 16	(16) 0.5	(16) RD / YE	(16) 6540	(16) Battery Positive Voltage	(16) I	(16) —

X85 Steering Wheel Airbag Coil X1

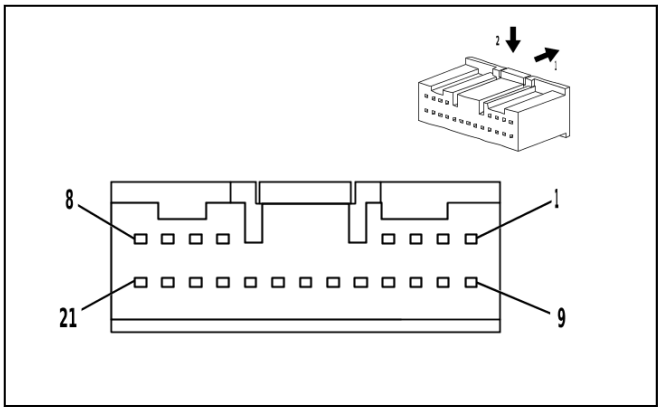

3960237

Connector Part Information

- Harness Type: Instrument Panel Wiring Harness
- OEM Connector: ATLCPB-21B-2AY
- Service Connector: 13510218
- Description: 21-Way F 0.64 Series(YE)

Terminal Part Information

Terminal Type ID	Terminated Lead	Diagnostic Test Probe	Terminal Removal Tool
I	13575742	J-35616-64B (L-BU)	J-38125-215A
II	13575865	J-35616-64B (L-BU)	J-38125-215A

X85 Steering Wheel Airbag Coil X1

Pin	Size	Color	Circuit	Function	Terminal Type ID	Option
(1) 1	(1) 0.5	(1) BK / WH	(1) 1851	(1) Signal Ground	(1) I	(1) —
(2) 2	(2) 0.35	(2) GN / WH	(2) 3287	(2) Horn Switch Signal	(2) I	(2) —
3 - 4	—	—	—	Not Occupied	—	—
(5) 5	(5) 0.5	(5) OG / GN	(5) 3023	(5) Steering Wheel Air Bag Stage 2 High Control	(5) II	(5) —
(6) 6	(6) 0.5	(6) WH / OG	(6) 3022	(6) Steering Wheel Air Bag Stage 2 Low Control	(6) II	(6) —
(7) 7	(7) 0.5	(7) BN / OG	(7) 3020	(7) Steering Wheel Air Bag Stage 1 Low Control	(7) II	(7) —
(8) 8	(8) 0.5	(8) OG / VT	(8) 3021	(8) Steering Wheel Air Bag Stage 1 High Control	(8) II	(8) —
(9) 9	(9) 0.35	(9) GN / BK	(9) 10652	(9) Radio LIN Bus 1	(9) I	(9) —
(10) 10	(10) 0.35 (10) 0.35	(10) GN / BK (10) GN / GY	(10) 2858 (10) 11023	(10) Body Control Module LIN Bus 12 (10) Image Processing Module LIN Bus 1	(10) I (10) I	(10) KI3- UKL (10) UKL
(11) 11	(11) 0.35	(11) GY / GN	(11) 11874	(11) Cruise Control Bank 1 Switch Signal	(11) I	(11) —
(12) 12	(12) 0.35	(12) BK / VT	(12) 1449	(12) Steering Wheel Resistor Ladder Low Reference	(12) I	(12) —

Pin	Size	Color	Circuit	Function	Terminal Type ID	Option
(13) 13	(13) 0.35	(13) WH / VT	(13) 2246	(13) Driver Illumination Lamp 1 Control	(13) I	(13) —
(14) 14	(14) 0.75	(14) RD / GN	(14) 5140	(14) Battery Positive Voltage	(14) I	(14) —
(15) 15	(15) 0.35	(15) BN / GN	(15) 11875	(15) Cruise Control Bank 2 Switch Signal	(15) I	(15) —
(16) 16	(16) 0.35	(16) VT / YE	(16) 5526	(16) Tap Up/Tap Down Switch Signal	(16) I	(16) —
(17) 17	(17) 0.35	(17) YE / BU	(17) 2245	(17) Driver Illumination Lamp 2 Control	(17) I	(17) —
(18) 18	(18) 0.35	(18) BU / BN	(18) 7744	(18) Driver Illumination Lamp Ground	(18) I	(18) —
19	—	—	—	Not Occupied	—	—
(20) 20	(20) 0.75	(20) BK	(20) 1850	(20) Ground	(20) I	(20) —
(21) 21	(21) 0.35	(21) RD / BN	(21) 10040	(21) Battery Positive Voltage	(21) I	(21) —

X85 Steering Wheel Airbag Coil X2

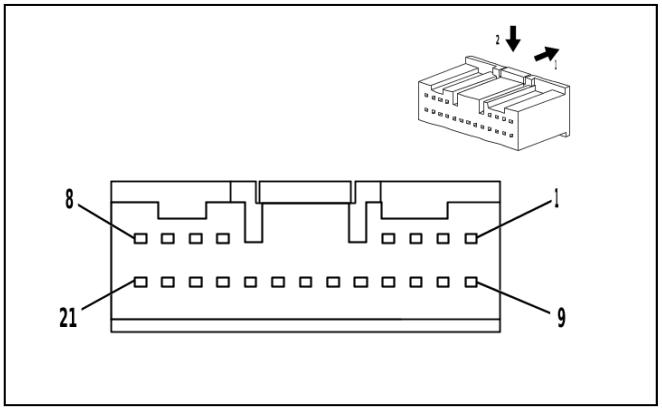

3960237

Connector Part Information

- Harness Type: Steering Wheel Horn Switch Wiring Harness
- OEM Connector: ATLCPB-21B-2AY
- Service Connector: Service by Harness - See Part Catalog
- Description: 21-Way F 0.64 Series(YE)

Terminal Part Information

Terminal Type ID	Terminated Lead	Diagnostic Test Probe	Terminal Removal Tool
I	Not required	J-35616-64B (L-BU)	No Tool Required

X85 Steering Wheel Airbag Coil X2

Pin	Size	Color	Circuit	Function	Terminal Type ID	Option
(1) 1	(1) 0.35	(1) BK / WH	(1) 6051	(1) Steering Wheel Ground	(1) I	(1) —
(2) 2	(2) 0.35	(2) GN / WH	(2) 3287	(2) Horn Switch Signal	(2) I	(2) —

Pin	Size	Color	Circuit	Function	Terminal Type ID	Option
3 - 6	—	—	—	Not Occupied	—	—
(7) 7	(7) 0.5	(7) BN / OG	(7) 3020	(7) Steering Wheel Air Bag Stage 1 Low Control	(7) I	(7) —
(8) 8	(8) 0.5	(8) OG / VT	(8) 3021	(8) Steering Wheel Air Bag Stage 1 High Control	(8) I	(8) —
(9) 9	(9) 0.5 (9) 0.5	(9) RD / BU (9) RD / BU	(9) 10040 (9) 6040	(9) Battery Positive Voltage (9) Battery Positive Voltage	(9) I (9) I	(9) UKL (9) - UKL
(10) 10	(10) 0.5 (10) 0.5	(10) BK (10) BK	(10) 6050 (10) 6050	(10) Steering Wheel Ground (10) Steering Wheel Ground	(10) I (10) I	(10) UKL (10) - UKL
11	—	—	—	Not Occupied	—	—
(12) 12	(12) 0.35	(12) BU / BN	(12) 7744	(12) Driver Illumination Lamp Ground	(12) I	(12) —
(13) 13	(13) 0.35	(13) YE / BU	(13) 2245	(13) Driver Illumination Lamp 2 Control	(13) I	(13) —
(14) 14	(14) 0.35	(14) VT / YE	(14) 5526	(14) Tap Up/Tap Down Switch Signal	(14) I	(14) —
(15) 15	(15) 0.35	(15) GY / GN	(15) 5737	(15) Distance Sensing Cruise Control Gap Up/ Down Switch Signal	(15) I	(15) —
(16) 16	(16) 0.35	(16) RD / GN	(16) 5140	(16) Battery Positive Voltage	(16) I	(16) —
(17) 17	(17) 0.35	(17) WH / VT	(17) 2246	(17) Driver Illumination Lamp 1 Control	(17) I	(17) —
(18) 18	(18) 0.35	(18) BK / VT	(18) 1449	(18) Steering Wheel Resistor Ladder Low Reference	(18) I	(18) —
(19) 19	(19) 0.35	(19) BN / GN	(19) 1884	(19) Cruise Control Set/Coast/Resume/ Accelerate Switch Signal	(19) I	(19) —
(20) 20	(20) 0.35 (20) 0.35	(20) GN / BK (20) GN / BK	(20) 11023 (20) 2858	(20) Image Processing Module LIN Bus 1 (20) Body Control Module LIN Bus 12	(20) I (20) I	(20) UKL (20) - UKL
(21) 21	(21) 0.35	(21) GN / WH	(21) 10652	(21) Radio LIN Bus 1	(21) I	(21) —

X88B Tow Vehicle Electrical Receptacle X1

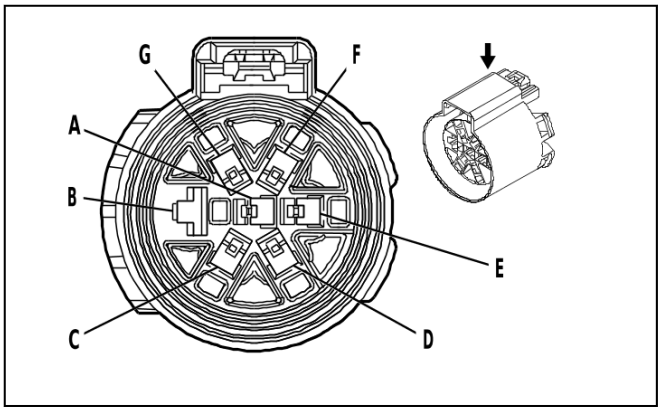

2056936

Connector Part Information

- Harness Type: Chassis Wiring Harness
- OEM Connector: 13857223
- Service Connector: 86816072
- Description: 7-Way F 280, 630 Metri-Pack Series, Sealed(BK)

Terminal Part Information

Terminal Type ID	Terminated Lead	Diagnostic Test Probe	Terminal Removal Tool
I	Not required	J-35616-42 (RD)	No Tool Required
II	Not required	J-35616-4A (PU)	No Tool Required

X88B Tow Vehicle Electrical Receptacle X1

Pin	Size	Color	Circuit	Function	Terminal Type ID	Option
A	0.75 0.75	GY GN / WH	1624 5189	Trailer Backup Lamp Control Trailer Backup Lamp Control	II II	- UET UET
B	5	WH	1950	Ground	I	—
C	2.5	BU	47	Trailer Auxiliary Control	II	—
D	0.75 0.75	GN YE / GY	1619 5187	Right Rear Trailer Stop/Turn Lamp Control Right Trailer Turn Signal Lamp Control	II II	- UET UET
E	4	OG	742	Battery Positive Voltage	II	—
F	1.5 0.75	BN BN / GY	2109 5184	Trailer Park Lamp Control Left Trailer Park Lamp Control	II II	- UET UET
G	0.75 0.75	YE BU / WH	1618 5186	Left Rear Trailer Stop/Turn Lamp Control Left Trailer Turn Signal Lamp Control	II II	- UET UET

X88B Tow Vehicle Electrical Receptacle X2

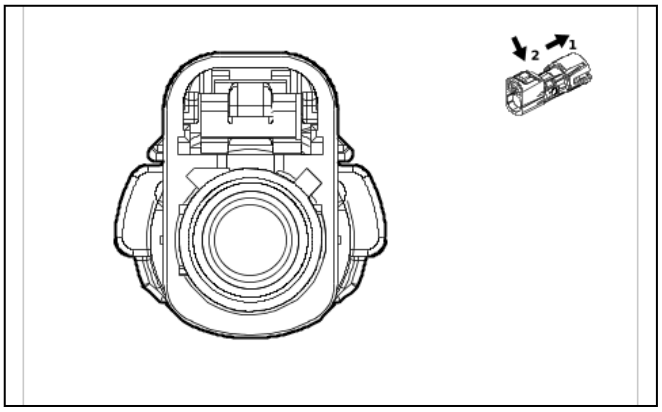

5758030

Connector Part Information
- Harness Type: Chassis Wiring Harness COAX
- OEM Connector: 35187032
- Service Connector: Service by Cable Assembly — See Part Catalog
- Description: 1-Way F Coax Type(BK)

Terminal Part Information

Terminal Type ID	Terminated Lead	Diagnostic Test Probe	Terminal Removal Tool
I	Not required	No Tool Required	No Tool Required

X88B Tow Vehicle Electrical Receptacle X2

Pin	Size	Color	Circuit	Function	Terminal Type ID	Option
—	—	Coax Cable	—	Trailer Rear Vision Camera Coaxial Video Signal	I	—

X88B Tow Vehicle Electrical Receptacle X3

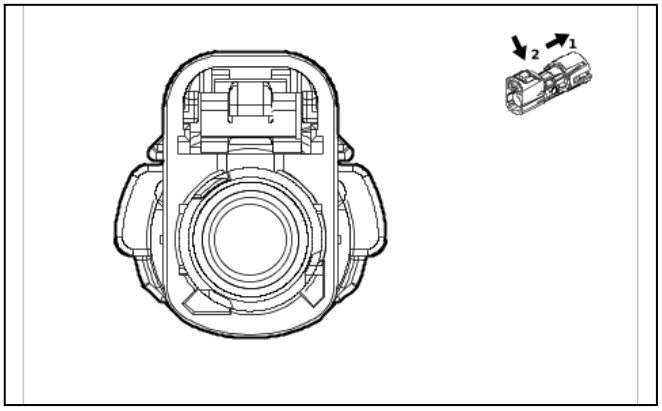

5757455

Connector Part Information
- Harness Type: Chassis Wiring Harness COAX
- OEM Connector: 35187043
- Service Connector: Service by Cable Assembly — See Part Catalog
- Description: 1-Way F Coax Type(OG)

Terminal Part Information

Terminal Type ID	Terminated Lead	Diagnostic Test Probe	Terminal Removal Tool
I	Not required	No Tool Required	No Tool Required

X88B Tow Vehicle Electrical Receptacle X3

Pin	Size	Color	Circuit	Function	Terminal Type ID	Option
—	—	Coax Cable	—	Trailer 2 Rear Vision Camera Coaxial Video Signal	I	—

X92BCL USB Receptacle - 3rd Row Seat Left

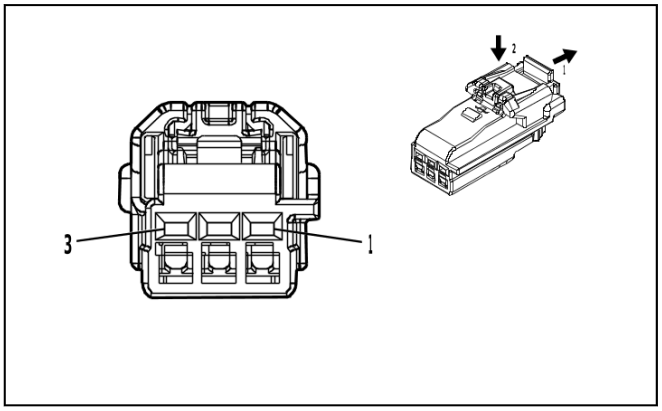

4971604

Connector Part Information

- Harness Type: Body Wiring Harness
- OEM Connector: 6098-8153
- Service Connector: 84644600
- Description: 3-Way F 1.2 MCON Series(BK)

Terminal Part Information

Terminal Type ID	Terminated Lead	Diagnostic Test Probe	Terminal Removal Tool
I	Not required	J-35616-16 (L-GN)	No Tool Required

X92BCL USB Receptacle - 3rd Row Seat Left

Pin	Size	Color	Circuit	Function	Terminal Type ID	Option
(1) 1	(1) 0.5	(1) VT	(1) 4701	(1) Retained Accessory Power Control	(1) I	(1) —
(2) 2	(2) 0.5	(2) YE	(2) 6817	(2) LED Backlight Dimming Control 1	(2) I	(2) —
(3) 3	(3) 0.5	(3) BK	(3) 1150	(3) Ground	(3) I	(3) —

X92BCR USB Receptacle - 3rd Row Seat Right

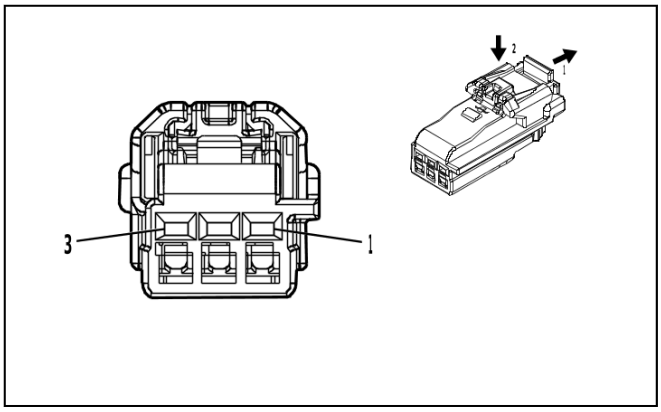

4971604

Connector Part Information
- Harness Type: Body Wiring Harness
- OEM Connector: 6098-8153
- Service Connector: 84644600
- Description: 3-Way F 1.2 MCON Series(BK)

Terminal Part Information

Terminal Type ID	Terminated Lead	Diagnostic Test Probe	Terminal Removal Tool
I	Not required	J-35616-16 (L-GN)	No Tool Required

X92BCR USB Receptacle - 3rd Row Seat Right

Pin	Size	Color	Circuit	Function	Terminal Type ID	Option
(1) 1	(1) 0.5	(1) VT	(1) 4701	(1) Retained Accessory Power Control	(1) I	(1) —
(2) 2	(2) 0.5	(2) YE	(2) 6817	(2) LED Backlight Dimming Control 1	(2) I	(2) —
(3) 3	(3) 0.5	(3) BK	(3) 1450	(3) Ground	(3) I	(3) —

X92CD Dual Charge Only Receptacle - Floor Console Rear (- AZ3)

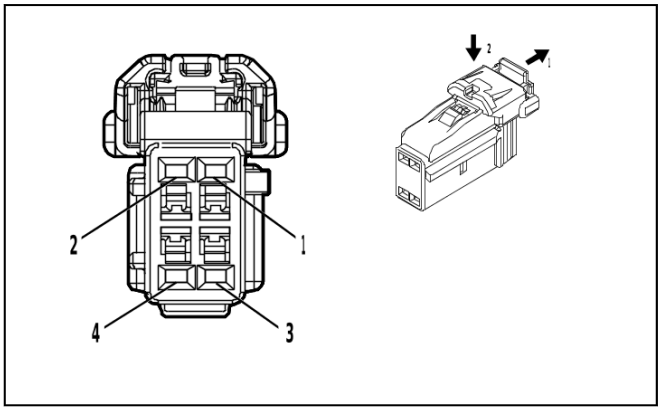

4872683

Connector Part Information
- Harness Type: Front Floor Console Wiring Harness
- OEM Connector: 6098-8435
- Service Connector: Service by Harness - See Part Catalog
- Description: 4-Way F 1.2 Series(BK)

Terminal Part Information

Terminal Type ID	Terminated Lead	Diagnostic Test Probe	Terminal Removal Tool
I	Not required	J-35616-16 (L-GN)	No Tool Required

X92CD Dual Charge Only Receptacle - Floor Console Rear (- AZ3)

Pin	Size	Color	Circuit	Function	Terminal Type ID	Option
(1) 1	(1) 0.5	(1) VT	(1) 4701	(1) Retained Accessory Power Control	(1) I	(1) —
(2) 2	(2) 0.75	(2) BK	(2) 1250	(2) Ground	(2) I	(2) —
3	—	—	—	Not Occupied	—	—
(4) 4	(4) 0.5	(4) YE	(4) 6817	(4) LED Backlight Dimming Control 1	(4) I	(4) —

X92CD Dual Charge Only Receptacle - Floor Console Rear (AZ3)

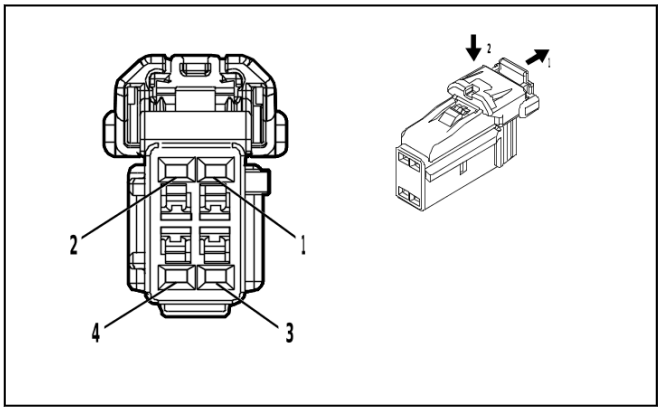

4872683

Connector Part Information

- Harness Type: Front Seat Wiring Harness - Center
- OEM Connector: 6098-8435
- Service Connector: Service by Harness - See Part Catalog
- Description: 4-Way F 1.2 Series(BK)

Terminal Part Information

Terminal Type ID	Terminated Lead	Diagnostic Test Probe	Terminal Removal Tool
I	Not required	J-35616-16 (L-GN)	No Tool Required

X92CD Dual Charge Only Receptacle - Floor Console Rear (AZ3)

Pin	Size	Color	Circuit	Function	Terminal Type ID	Option
(1) 1	(1) 0.5	(1) VT	(1) 4701	(1) Retained Accessory Power Control	(1) I	(1) —
(2) 2	(2) 0.75	(2) BK	(2) 1250	(2) Ground	(2) I	(2) —
3	—	—	—	Not Occupied	—	—
(4) 4	(4) 0.5	(4) YE	(4) 6817	(4) LED Backlight Dimming Control 1	(4) I	(4) —

X92CF USB 2 Port Receptacle - Floor Console Front X1 (- DCH)

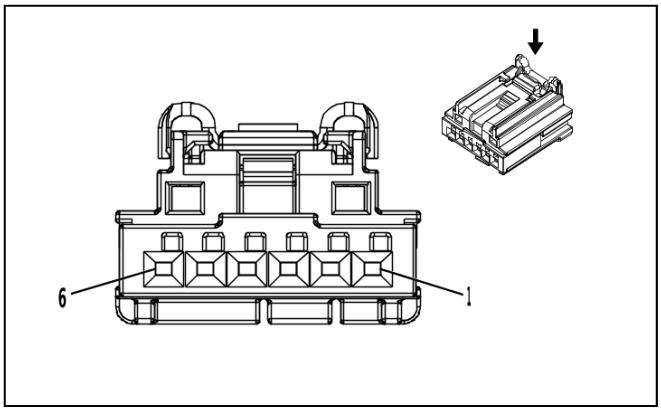

3960313

Connector Part Information

- Harness Type: Front Floor Console Wiring Harness
- OEM Connector: 2035363-4
- Service Connector: Service by Harness - See Part Catalog
- Description: 6-Way F 0.64 Generation Y Series(BK)

Terminal Part Information

Terminal Type ID	Terminated Lead	Diagnostic Test Probe	Terminal Removal Tool
I	Not required	J-35616-64B (L-BU)	No Tool Required

X92CF USB 2 Port Receptacle - Floor Console Front X1 (- DCH)

Pin	Size	Color	Circuit	Function	Terminal Type ID	Option
(1) 1	(1) 0.5 (1) 0.75	(1) RD / WH (1) RD / WH	(1) 7240 (1) 7240	(1) Battery Positive Voltage (1) Battery Positive Voltage	(1) I (1) I	(1) - UW9 (1) UW9
(2) 2	(2) 0.35	(2) YE	(2) 6817	(2) LED Backlight Dimming Control 1	(2) I	(2) —
(3) 3	(3) 0.75	(3) BK / WH	(3) 1451	(3) Signal Ground	(3) I	(3) —
4 - 6	—	—	—	Not Occupied	—	—

X92CF USB 2 Port Receptacle - Floor Console Front X2 (- DCH)

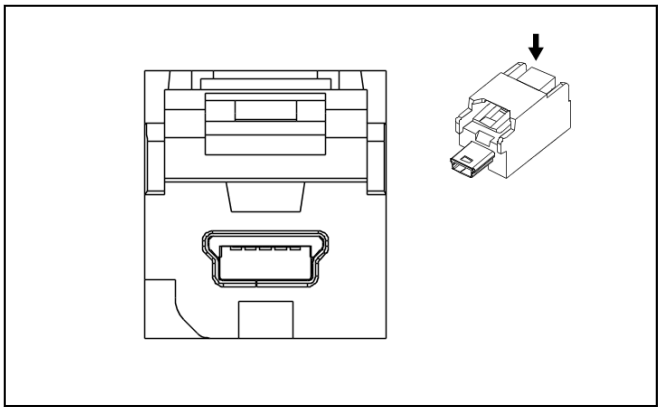

3214018

Connector Part Information
- Harness Type: Front Floor Console Wiring Harness USB
- OEM Connector: 13868840
- Service Connector: Service by Cable Assembly — See Part Catalog
- Description: 5-Way M 2.0 Mini-B USB Type(GY)

Terminal Part Information

Terminal Type ID	Terminated Lead	Diagnostic Test Probe	Terminal Removal Tool
I	Not required	No Tool Required	No Tool Required

X92CF USB 2 Port Receptacle - Floor Console Front X2 (- DCH)

Pin	Size	Color	Circuit	Function	Terminal Type ID	Option
—	—	USB	—	USB Serial Data	I	—

X92IP USB 2 Port Receptacle - Instrument Panel X1 (AZ3)

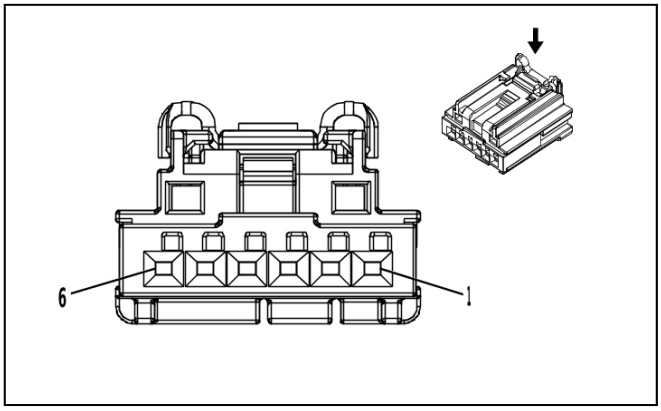

3960313

Connector Part Information
- Harness Type: Instrument Panel Wiring Harness
- OEM Connector: 2035363-4
- Service Connector: 19332786
- Description: 6-Way F 0.64 Generation Y Series(BK)

Terminal Part Information

Terminal Type ID	Terminated Lead	Diagnostic Test Probe	Terminal Removal Tool
I	Not required	J-35616-64B (L-BU)	No Tool Required

X92IP USB 2 Port Receptacle - Instrument Panel X1 (AZ3)

Pin	Size	Color	Circuit	Function	Terminal Type ID	Option
(1) 1	(1) 0.5	(1) RD / YE	(1) 2340	(1) Battery Positive Voltage	(1) I	(1) —
(2) 2	(2) 0.35	(2) YE	(2) 6817	(2) LED Backlight Dimming Control 1	(2) I	(2) —
(3) 3	(3) 0.5	(3) BK / WH	(3) 1451	(3) Signal Ground	(3) I	(3) —
4 - 6	—	—	—	Not Occupied	—	—

X92IP USB 2 Port Receptacle - Instrument Panel X2 (AZ3)

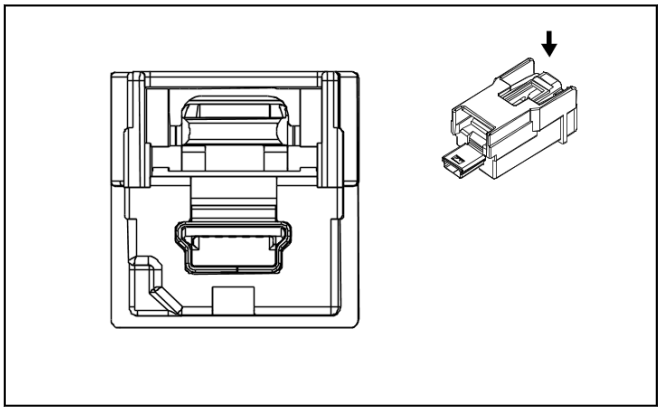

2807491

Connector Part Information

- Harness Type: Instrument Panel Wiring Harness USB
- OEM Connector: 111014-9001
- Service Connector: Service by Cable Assembly — See Part Catalog
- Description: 5-Way M 2.0 Mini-B USB Type(GY)

Terminal Part Information

Terminal Type ID	Terminated Lead	Diagnostic Test Probe	Terminal Removal Tool
I	Not required	No Tool Required	No Tool Required

X92IP USB 2 Port Receptacle - Instrument Panel X2 (AZ3)

Pin	Size	Color	Circuit	Function	Terminal Type ID	Option
—	—	USB	—	USB Serial Data	I	—

X125 Engine Wiring Harness to Body Wiring Harness

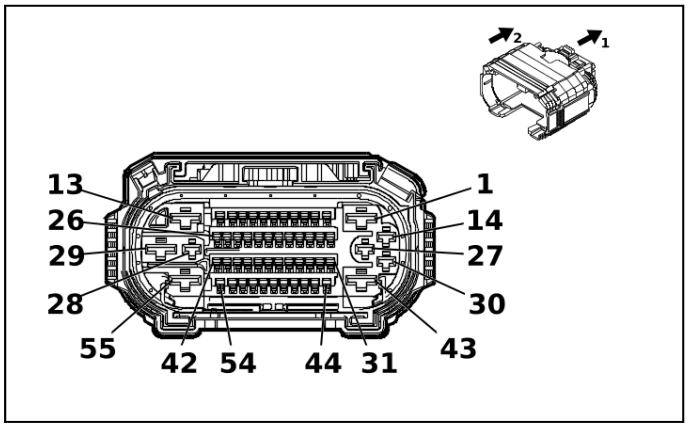

5246872

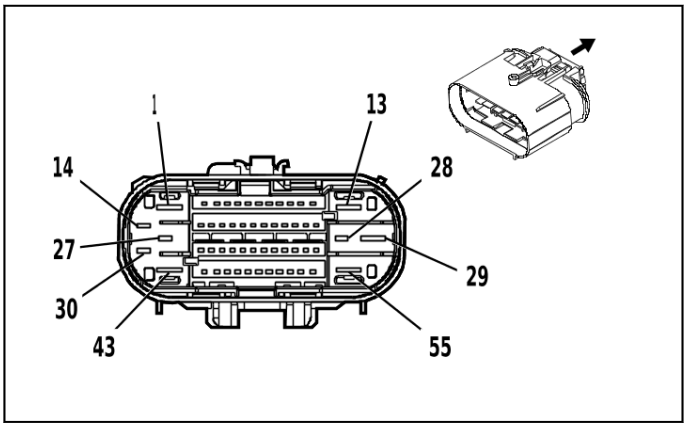

4994369

Connector Part Information

- Harness Type: Engine Wiring Harness
- OEM Connector: 35016653
- Service Connector: 19371184
- Description: 55-Way F 1.2 OCS, 2.8, 6.3 CTS Series, Sealed(GY)

Connector Part Information

- Harness Type: Body Wiring Harness
- OEM Connector: 35205174
- Service Connector: 84727363
- Description: 55-Way M 1.2 OCS, 2.8, 6.3 CTS Series, Sealed(GY)

Terminal Part Information

Terminal Type ID	Terminated Lead	Diagnostic Test Probe	Terminal Removal Tool
I	19332901	J-35616-35 (VT)	J-38125-212
II	19370818	J-35616-12 (BU)	J-38125-215A
III	19371217	J-35616-12 (BU)	J-38125-215A
IV	84634921	J-35616-42 (RD)	J-38125-212
V	84847992	J-35616-32 (OG)	J-38125-36
VI	84867140	J-35616-13 (BU)	J-38125-215A
VII	84992391	J-35616-5 (PU)	J-38125-36

X125 Engine Wiring Harness to Body Wiring Harness

Pin	Size	Color	Circuit	Terminal Type ID	Option	Function	Pin	Size	Color	Circuit	Terminal Type ID	Option
1 - 2	—	—	—	—	—	Not Occupied	1 - 2	—	—	—	—	—
(3) 3	(3) 0.5	(3) BK / BU	(3) 1271	(3) II	(3) —	(3) Accelerator Pedal Position Low Reference 1	(3) 3	(3) 0.5	(3) BK / BU	(3) 1271	(3) VI	(3) —
4	—	—	—	—	—	Not Occupied	4	—	—	—	—	—
(5) 5	(5) 0.5	(5) GN / WH	(5) 1162	(5) II	(5) —	(5) Accelerator Pedal Position Signal 2	(5) 5	(5) 0.5	(5) GN / WH	(5) 1162	(5) VI	(5) —
(6) 6	(6) 0.5	(6) GN / BN	(6) 507	(6) II	(6) —	(6) Wait To Start Indicator Control	(6) 6	(6) 0.35	(6) GN / BN	(6) 507	(6) VI	(6) —
7 - 11	—	—	—	—	—	Not Occupied	7 - 11	—	—	—	—	—

Pin	Size	Color	Circuit	Terminal Type ID	Option	Function	Pin	Size	Color	Circuit	Terminal Type ID	Option
(12) 12	(12) 0.75	(12) B N / YE	(12) 82 0	(12) II	(12) —	(12) Center High Mounted Stop Lamp Supply Volt-age	(12) 12	(12) 0.75	(12) B N / YE	(12) 82 0	(12) VI	(12) —
13	—	—	—	—	—	Not Occupied	13	—	—	—	—	—
(14) 14	(14) 2.5	(14) B U	(14) 47	(14) I	(14) —	(14) Trailer Auxiliary Control	(14) 14	(14) 2.5	(14) B U	(14) 47	(14) VII	(14) —
(15) 15	(15) 0.5	(15) Y E	(15) 40 63	(15) II	(15) —	(15) Hood Status A Signal	(15) 15	(15) 0.5	(15) Y E	(15) 40 63	(15) VI	(15) —
16 - 23	—	—	—	—	—	Not Occupied	16 - 23	—	—	—	—	—
(24) 24	(24) 0.5	(24) B U / GY	(24) 40 54	(24) II	(24) —	(24) Private Serial Data Powertrain CAN Bus [-] Serial Data	(24) 24	(24) 0.35	(24) B U / GY	(24) 40 54	(24) VI	(24) —
(25) 25	(25) 0.5	(25) WH	(25) 40 55	(25) II	(25) —	(25) Private Serial Data Powertrain CAN Bus [+] Serial Data	(25) 25	(25) 0.35	(25) WH	(25) 40 55	(25) VI	(25) —
(26) 26	(26) 0.5	(26) WH / RD	(26) 48 0	(26) II	(26) —	(26) Engine Control Vehicle Sensors 5 Volt Reference 1	(26) 26	(26) 0.5	(26) WH / RD	(26) 48 0	(26) VI	(26) —
(27) 27	(27) 0.5	(27) B K / GN	(27) 58 0	(27) I	(27) —	(27) Engine Control Sensors Low Reference 2	(27) 27	(27) 0.5	(27) B K / GN	(27) 58 0	(27) VII	(27) —
(28) 28	(28) 0.5	(28) B K / YE	(28) 54 8	(28) I	(28) —	(28) Engine Control Sensors Low Reference 1	(28) 28	(28) 0.5	(28) B K / YE	(28) 54 8	(28) VII	(28) —
(29) 29	(29) 0.5	(29) B U / RD	(29) 46 0	(29) IV	(29) —	(29) Engine Control Sensors 5 Volt Reference 1	(29) 29	(29) 0.5	(29) B U / RD	(29) 46 0	(29) V	(29) —
30 - 31	—	—	—	—	—	Not Occupied	30 - 31	—	—	—	—	—
(32) 32	(32) 0.5	(32) B N	(32) 10 515	(32) II	(32) —	(32) Electroni c Transmission Range Select Shifter Position Sensor 1 Signal	(32) 32	(32) 0.5	(32) B N	(32) 10 515	(32) VI	(32) —
(33) 33	(33) 0.5	(33) G Y	(33) 10 518	(33) II	(33) —	(33) Electroni c Transmission Range Select Shifter Position Sensor 2 Signal	(33) 33	(33) 0.5	(33) G Y	(33) 10 518	(33) VI	(33) —

Pin	Size	Color	Circuit	Terminal Type ID	Option	Function	Pin	Size	Color	Circuit	Terminal Type ID	Option
34	—	—	—	—	—	Not Occupied	34	—	—	—	—	—
(35) 35	(35) 0.5	(35) BK / GY	(35) 626	(35) II	(35) —	(35) Engine Control Vehicle Sensors Low Reference 1	(35) 35	(35) 0.5	(35) BK / GY	(35) 626	(35) VI	(35) —
(36) 36	(36) 0.5	(36) WH / GN	(36) 5380	(36) II	(36) —	(36) Brake Position Sensor Signal	(36) 36	(36) 0.5	(36) WH / GN	(36) 5380	(36) VI	(36) —
(37) 37	(37) 0.5	(37) WH / RD	(37) 480	(37) II	(37) —	(37) Engine Control Vehicle Sensors 5 Volt Reference 1	(37) 37	(37) 0.35	(37) WH / RD	(37) 480	(37) VI	(37) —
38	—	—	—	—	—	Not Occupied	38	—	—	—	—	—
(39) 39	(39) 0.5	(39) GN / WH	(39) 4622	(39) II	(39) —	(39) Engine Control Module LIN Bus 2	(39) 39	(39) 0.35	(39) GN / WH	(39) 4622	(39) VI	(39) —
(40) 40	(40) 0.5	(40) BK / VT	(40) 1272	(40) II	(40) —	(40) Accelerator Pedal Position Low Reference 2	(40) 40	(40) 0.5	(40) BK / VT	(40) 1272	(40) VI	(40) —
41	—	—	—	—	—	Not Occupied	41	—	—	—	—	—
(42) 42	(42) 0.5	(42) YE / BK	(42) 625	(42) II	(42) —	(42) Starter Enable Relay Control	(42) 42	(42) 0.35	(42) YE / BK	(42) 625	(42) VI	(42) —
(43) 43	(43) 6 (43) 5	(43) BK / WH (43) BK / WH	(43) 6151 (43) 6151	(43) IV (43) IV	(43) L84/ L87 (43) LZ0	(43) Engine Control Module Ground (43) Engine Control Module Ground	(43) 43	(43) 6	(43) BK / WH	(43) 6151	(43) V	(43) —
(44) 44	(44) 1	(44) RD / GN	(44) 1840	(44) III	(44) —	(44) Battery Positive Voltage	(44) 44	(44) 0.75	(44) RD / GN	(44) 1840	(44) VI	(44) —
45 - 46	—	—	—	—	—	Not Occupied	45 - 46	—	—	—	—	—
(47) 47	(47) 0.5	(47) BU / BN	(47) 7573	(47) II	(47) —	(47) Air Conditioning Compressor Solenoid Valve Control	(47) 47	(47) 0.5	(47) BU / BN	(47) 7573	(47) VI	(47) —
48	—	—	—	—	—	Not Occupied	48	—	—	—	—	—
(49) 49	(49) 0.5	(49) YE / WH	(49) 1161	(49) II	(49) —	(49) Accelerator Pedal Position Signal 1	(49) 49	(49) 0.5	(49) YE / WH	(49) 1161	(49) VI	(49) —
(50) 50	(50) 0.5	(50) WH / RD	(50) 1164	(50) II	(50) —	(50) Accelerator Pedal Position 5V Reference 1	(50) 50	(50) 0.5	(50) WH / RD	(50) 1164	(50) VI	(50) —
(51) 51	(51) 0.5	(51) BN / RD	(51) 1274	(51) II	(51) —	(51) Accelerator Pedal Position 5V Reference 2	(51) 51	(51) 0.5	(51) BN / RD	(51) 1274	(51) VI	(51) —

Pin	Size	Color	Circuit	Terminal Type ID	Option	Function	Pin	Size	Color	Circuit	Terminal Type ID	Option
52	—	—	—	—	—	Not Occupied	52	—	—	—	—	—
(53) 53	(53) 0.5	(53) B U / YE	(53) 75 74	(53) II	(53) —	(53) Air Conditioning Compressor Solenoid Valve Control	(53) 53	(53) 0.5	(53) B U / YE	(53) 75 74	(53) VI	(53) —
54 - 55	—	—	—	—	—	Not Occupied	54 - 55	—	—	—	—	—

X128C Engine Wiring Harness to Camshaft Position Sensor Wire (L84 / L87)

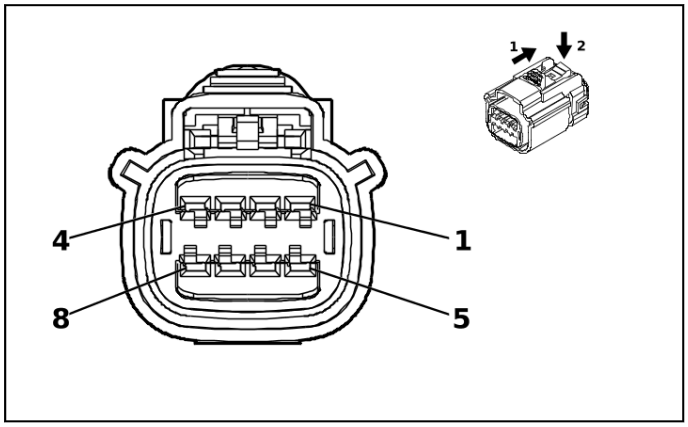

5253496

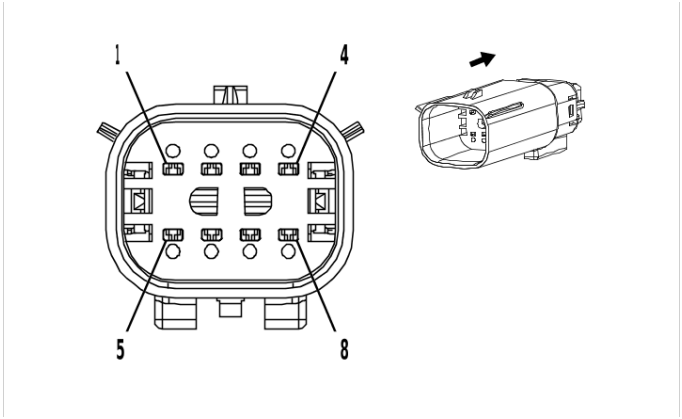

2667653

Connector Part Information
- Harness Type: Engine Wiring Harness
- OEM Connector: 15514667
- Service Connector: 84766296
- Description: 8-Way F 1.5 OCS Series, Sealed(BK)

Connector Part Information
- Harness Type: Camshaft Position Sensor Wire
- OEM Connector: 13520589
- Service Connector: Service by Harness - See Part Catalog
- Description: 8-Way M 1.5 MX Series, Sealed(BK)

Terminal Part Information

Terminal Type ID	Terminated Lead	Diagnostic Test Probe	Terminal Removal Tool
I	Not required	J-35616-14 (GN)	No Tool Required
II	Not required	J-35616-2A (GY)	No Tool Required
III	Not required	No Tool Required	No Tool Required

X128C Engine Wiring Harness to Camshaft Position Sensor Wire (L84 / L87)

Pin	Size	Color	Circuit	Terminal Type ID	Option	Function	Pin	Size	Color	Circuit	Terminal Type ID	Option
(1) 1	(1) 0.5	(1) GY / BU	(1) 5300	(1) I	(1) —	(1) Intake Camshaft Position Sensor 1 Voltage Reference	(1) 1	(1) 0.5	(1) GY / BU	(1) 5300	(1) III	(1) —
(2) 2	(2) 0.5	(2) BK / GN	(2) 5301	(2) I	(2) —	(2) Intake Camshaft Position Sensor Low Reference 1	(2) 2	(2) 0.5	(2) BK / GN	(2) 5301	(2) III	(2) —

Pin	Size	Color	Circuit	Terminal Type ID	Option	Function	Pin	Size	Color	Circuit	Terminal Type ID	Option
(3) 3	(3) 0.5	(3) YE / VT	(3) 5275	(3) I	(3) —	(3) Intake Camshaft Position Sensor 1	(3) 3	(3) 0.5	(3) YE / VT	(3) 5275	(3) III	(3) —
(4) 4	(4) 0.5	(4) BU	(4) 179	(4) I	(4) —	(4) Engine Oil Pump Control	(4) 4	(4) 0.5	(4) BU	(4) 179	(4) III	(4) —
(5) 5	(5) 0.5	(5) VT / BN	(5) 5284	(5) I	(5) —	(5) Intake Camshaft Position Actuator Solenoid Valve 1	(5) 5	(5) 0.5	(5) VT / BN	(5) 5284	(5) III	(5) —
(6) 6	(6) 0.5	(6) BK / BN	(6) 6753	(6) I	(6) —	(6) Camshaft Position Actuator Solenoid Valve 1 Low Reference	(6) 6	(6) 0.5	(6) BK / BN	(6) 6753	(6) III	(6) —
(7) 7	(7) 0.75	(7) VT / BU	(7) 5293	(7) II	(7) —	(7) Powertrain Main Relay Fused Supply Voltage 4	(7) 7	(7) 0.5	(7) VT / BU	(7) 5293	(7) III	(7) —
8	—	—	—	—	—	Not Occupied	8	—	—	—	—	—

X129 Camshaft Position Sensor Wire to Oil Pump Flow Control Solenoid Valve Harness (L87)

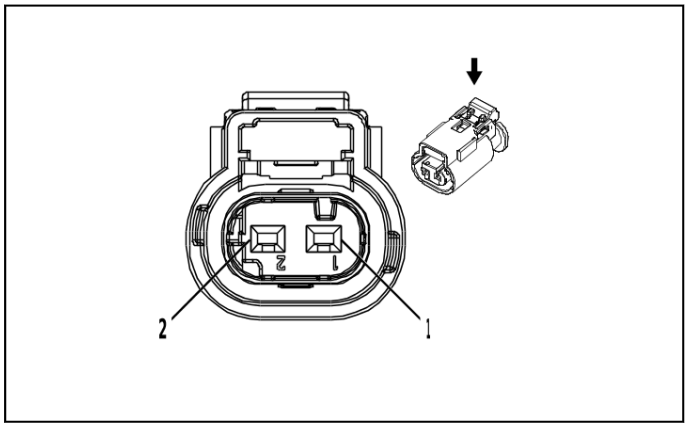

2717066

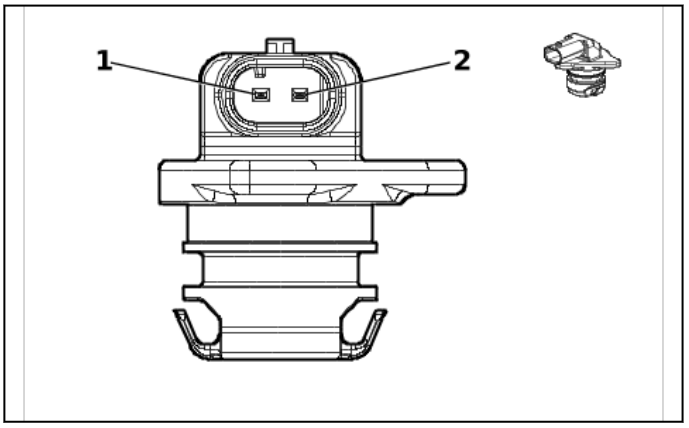

5869753

Connector Part Information
- Harness Type: Camshaft Position Sensor Wire
- OEM Connector: 10010337
- Service Connector: Service by Harness - See Part Catalog
- Description: 2-Way F 1.2 Multilock Series, Sealed(BK)

Connector Part Information
- Harness Type: Oil Pump Flow Control Solenoid Valve Harness
- OEM Connector: 310832B
- Service Connector: Service by Harness - See Part Catalog
- Description: 2-Way M 1.2 Series, Sealed(BK)

Terminal Part Information

Terminal Type ID	Terminated Lead	Diagnostic Test Probe	Terminal Removal Tool
I	Not required	J-35616-12 (BU)	No Tool Required
II	Not required	J-35616-13 (BU)	No Tool Required

X129 Camshaft Position Sensor Wire to Oil Pump Flow Control Solenoid Valve Harness (L87)

Pin	Size	Color	Circuit	Terminal Type ID	Option	Function	Pin	Size	Color	Circuit	Terminal Type ID	Option
(1) 1	(1) 0.5	(1) VT / BU	(1) 5293	(1) I	(1) —	(1) Powertrain Main Relay Fused Supply Voltage 4	(1) 1	(1) 0.5	(1) VT / BU	(1) 5293	(1) II	(1) —
(2) 2	(2) 0.5	(2) BU	(2) 179	(2) I	(2) —	(2) Engine Oil Pump Control	(2) 2	(2) 0.5	(2) BU	(2) 179	(2) II	(2) —

X129 Engine Wiring Harness to Oil Pump Flow Control Solenoid Valve Wiring Harness (LZ0)

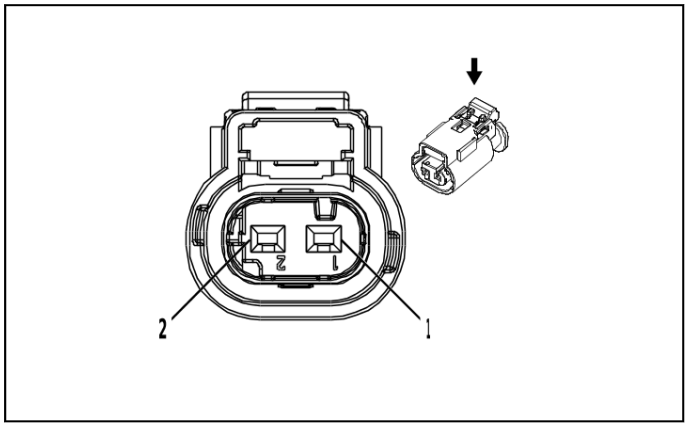

2717066

Connector Part Information
- Harness Type: Engine Wiring Harness
- OEM Connector: 13503566
- Service Connector: 13587326
- Description: 2-Way F 1.2 Multilock Series, Sealed(BK)

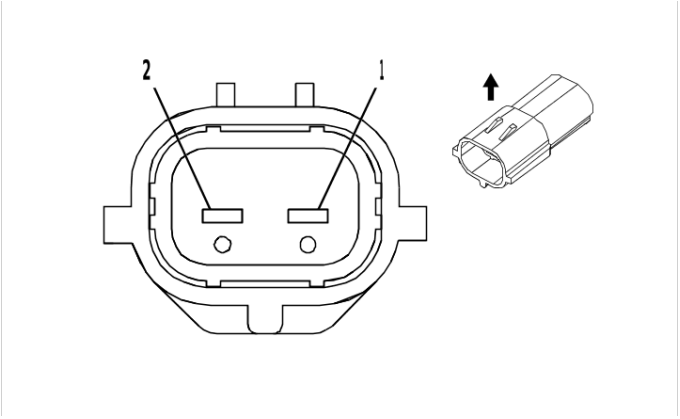

2684367

Connector Part Information
- Harness Type: Oil Pump Flow Control Solenoid Valve Wiring Harness
- OEM Connector: Not Available
- Service Connector: Service by Harness - See Part Catalog
- Description: 2-Way M (BK)

Terminal Part Information

Terminal Type ID	Terminated Lead	Diagnostic Test Probe	Terminal Removal Tool
I	Not required	J-35616-16 (L-GN)	No Tool Required
II	Not required	No Tool Required	No Tool Required

X129 Engine Wiring Harness to Oil Pump Flow Control Solenoid Valve Wiring Harness (LZ0)

Pin	Size	Color	Circuit	Terminal Type ID	Option	Function	Pin	Size	Color	Circuit	Terminal Type ID	Option
(1) 1	(1) 0.5	(1) YE / BN	(1) 106	(1) I	(1) —	(1) Oil Pump Motor Control	(1) 1	(1) 0.5	(1) YE / BN	(1) 106	(1) II	(1) —
(2) 2	(2) 0.5	(2) BU	(2) 179	(2) I	(2) —	(2) Engine Oil Pump Control	(2) 2	(2) 0.5	(2) BU	(2) 179	(2) II	(2) —

X160 Engine Wiring Harness to Fuel Injector Wiring Harness (LZ0)

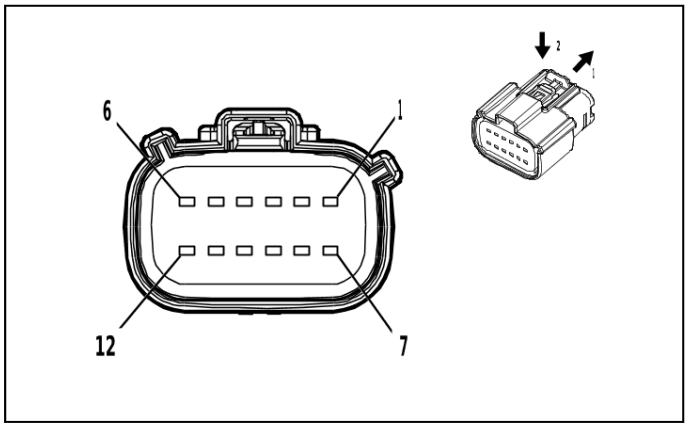

4584248

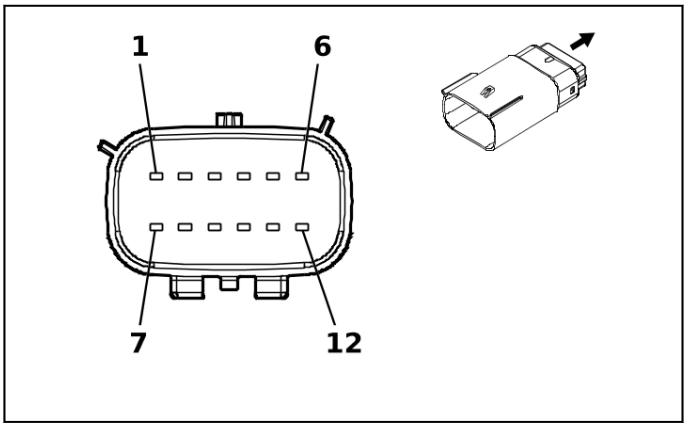

5187933

Connector Part Information
- Harness Type: Engine Wiring Harness
- OEM Connector: 33472-1259
- Service Connector: 19333239
- Description: 12-Way F 1.5 MX Series, Sealed(D-GY)

Connector Part Information
- Harness Type: Fuel Injector Wiring Harness
- OEM Connector: 33482-6261
- Service Connector: Service by Harness - See Part Catalog
- Description: 12-Way M 1.5 MX Series, Sealed(GY)

Terminal Part Information

Terminal Type ID	Terminated Lead	Diagnostic Test Probe	Terminal Removal Tool
I	85528055	J-35616-2A (GY)	J-38125-217
II	Not required	J-35616-3 (GY)	No Tool Required

X160 Engine Wiring Harness to Fuel Injector Wiring Harness (LZ0)

Pin	Size	Color	Circuit	Terminal Type ID	Option	Function	Pin	Size	Color	Circuit	Terminal Type ID	Option
(1) 1	(1) 1.5	(1) BN / WH	(1) 490 1	(1) I	(1) —	(1) Direct Fuel Injector High Voltage Supply Cylinder 1	(1) 1	(1) 1.5	(1) BN / WH	(1) 490 1	(1) II	(1) —
(2) 2	(2) 1.5	(2) BN	(2) 480 1	(2) I	(2) —	(2) Direct Fuel Injector High Voltage Control Cylinder 1	(2) 2	(2) 1.5	(2) BN	(2) 480 1	(2) II	(2) —
(3) 3	(3) 1.5	(3) BU / GY	(3) 490 2	(3) I	(3) —	(3) Direct Fuel Injector High Voltage Supply Cylinder 2	(3) 3	(3) 1.5	(3) BU / GY	(3) 490 2	(3) II	(3) —
(4) 4	(4) 1.5	(4) BU	(4) 480 2	(4) I	(4) —	(4) Direct Fuel Injector High Voltage Control Cylinder 2	(4) 4	(4) 1.5	(4) BU	(4) 480 2	(4) II	(4) —
(5) 5	(5) 1.5	(5) GN / GY	(5) 490 3	(5) I	(5) —	(5) Direct Fuel Injector High Voltage Supply Cylinder 3	(5) 5	(5) 1.5	(5) GN / GY	(5) 490 3	(5) II	(5) —

Pin	Size	Color	Circuit	Terminal Type ID	Option	Function	Pin	Size	Color	Circuit	Terminal Type ID	Option
(6) 6	(6) 1.5	(6) GN	(6) 4803	(6) I	(6) —	(6) Direct Fuel Injector High Voltage Control Cylinder 3	(6) 6	(6) 1.5	(6) GN	(6) 4803	(6) II	(6) —
(7) 7	(7) 1.5	(7) BU / WH	(7) 4904	(7) I	(7) —	(7) Direct Fuel Injector High Voltage Supply Cylinder 4	(7) 7	(7) 1.5	(7) BU / WH	(7) 4904	(7) II	(7) —
(8) 8	(8) 1.5	(8) GY / BU	(8) 4804	(8) I	(8) —	(8) Direct Fuel Injector High Voltage Control Cylinder 4	(8) 8	(8) 1.5	(8) GY / BU	(8) 4804	(8) II	(8) —
(9) 9	(9) 1.5	(9) GN / WH	(9) 4905	(9) I	(9) —	(9) Direct Fuel Injector High Voltage Supply Cylinder 5	(9) 9	(9) 1.5	(9) GN / WH	(9) 4905	(9) II	(9) —
(10) 10	(10) 1.5	(10) WH / GN	(10) 4805	(10) I	(10) —	(10) Direct Fuel Injector High Voltage Control Cylinder 5	(10) 10	(10) 1.5	(10) WH / GN	(10) 4805	(10) II	(10) —
(11) 11	(11) 1.5	(11) VT / GY	(11) 4906	(11) I	(11) —	(11) Direct Fuel Injector High Voltage Supply Cylinder 6	(11) 11	(11) 1.5	(11) VT / GY	(11) 4906	(11) II	(11) —
(12) 12	(12) 1.5	(12) VT / GN	(12) 4806	(12) I	(12) —	(12) Direct Fuel Injector High Voltage Control Cylinder 6	(12) 12	(12) 1.5	(12) VT / GN	(12) 4806	(12) II	(12) —

X160 Engine Wiring Harness to Fuel Injector Wiring Harness - Left (L84 / L87)

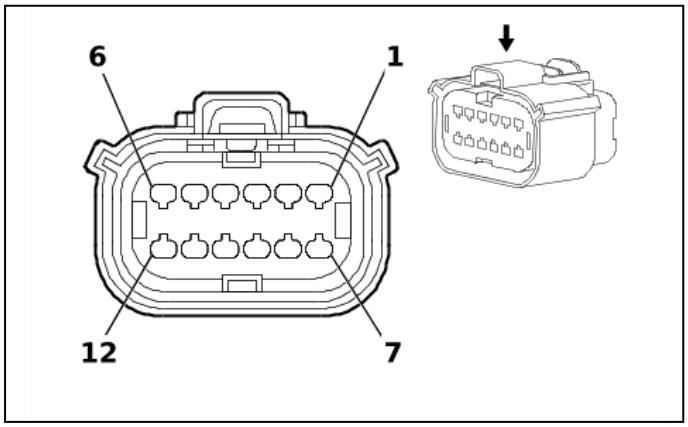

1825165

Connector Part Information

- Harness Type: Engine Wiring Harness
- OEM Connector: 33472-1216
- Service Connector: 19352907
- Description: 12-Way F 1.5 MX Series, Sealed(BK)

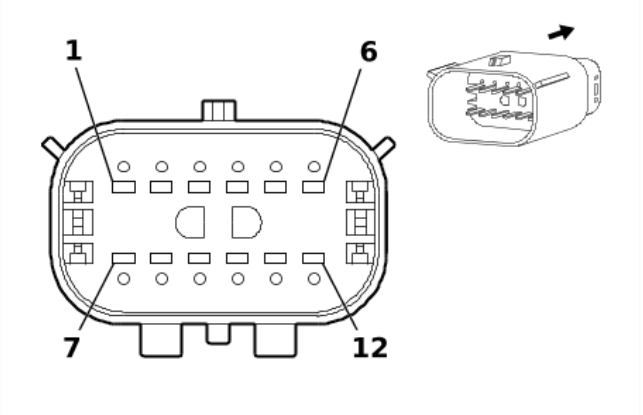

1825167

Connector Part Information

- Harness Type: Fuel Injector Wiring Harness - Left
- OEM Connector: 13520581
- Service Connector: Service by Harness - See Part Catalog
- Description: 12-Way M 1.5 MX Series, Sealed(BK)

Terminal Part Information

Terminal Type ID	Terminated Lead	Diagnostic Test Probe	Terminal Removal Tool
I	85528055	J-35616-2A (GY)	J-38125-217
II	Not required	J-35616-3 (GY)	No Tool Required

X160 Engine Wiring Harness to Fuel Injector Wiring Harness - Left (L84 / L87)

Pin	Size	Color	Circuit	Terminal Type ID	Option	Function	Pin	Size	Color	Circuit	Terminal Type ID	Option
(1) 1	(1) 0.75	(1) BN / WH	(1) 4901	(1) I	(1) —	(1) Direct Fuel Injector High Voltage Supply Cylinder 1	(1) 1	(1) 0.75	(1) BN / WH	(1) 4901	(1) II	(1) —
(2) 2	(2) 0.75	(2) GN / GY	(2) 4903	(2) I	(2) —	(2) Direct Fuel Injector High Voltage Supply Cylinder 3	(2) 2	(2) 0.75	(2) GN / GY	(2) 4903	(2) II	(2) —
(3) 3	(3) 0.75	(3) GN / WH	(3) 4905	(3) I	(3) —	(3) Direct Fuel Injector High Voltage Supply Cylinder 5	(3) 3	(3) 0.75	(3) GN / WH	(3) 4905	(3) II	(3) —
(4) 4	(4) 0.75	(4) WH / YE	(4) 4907	(4) I	(4) —	(4) Direct Fuel Injector High Voltage Supply Cylinder 7	(4) 4	(4) 0.75	(4) WH / YE	(4) 4907	(4) II	(4) —
(5) 5	(5) 0.75	(5) BN	(5) 4801	(5) I	(5) —	(5) Direct Fuel Injector High Voltage Control Cylinder 1	(5) 5	(5) 0.75	(5) BN	(5) 4801	(5) II	(5) —
6	—	—	—	—	—	Not Occupied	6	—	—	—	—	—
(7) 7	(7) 0.75	(7) GN	(7) 4803	(7) I	(7) —	(7) Direct Fuel Injector High Voltage Control Cylinder 3	(7) 7	(7) 0.75	(7) GN	(7) 4803	(7) II	(7) —
(8) 8	(8) 0.75	(8) WH / GN	(8) 4805	(8) I	(8) —	(8) Direct Fuel Injector High Voltage Control Cylinder 5	(8) 8	(8) 0.75	(8) WH / GN	(8) 4805	(8) II	(8) —
(9) 9	(9) 0.75	(9) YE / GY	(9) 4807	(9) I	(9) —	(9) Direct Fuel Injector High Voltage Control Cylinder 7	(9) 9	(9) 0.75	(9) YE / GY	(9) 4807	(9) II	(9) —
(10) 10	(10) 0.5	(10) WH / RD	(10) 480	(10) I	(10) —	(10) Engine Control Vehicle Sensors 5 Volt Reference 1	(10) 10	(10) 0.5	(10) BN / RD	(10) 480	(10) II	(10) —

Pin	Size	Color	Circuit	Terminal Type ID	Option	Function	Pin	Size	Color	Circuit	Terminal Type ID	Option
(11) 11	(11) 0.5	(11) B U / WH	(11) 29 18	(11) I	(11) —	(11) Fuel Rail Pressure Sensor Signal	(11) 11	(11) 0.5	(11) B U / WH	(11) 29 18	(11) II	(11) —
(12) 12	(12) 0.5	(12) B K / YE	(12) 54 8	(12) I	(12) —	(12) Engine Control Sensors Low Reference 1	(12) 12	(12) 0.5	(12) B K / GN	(12) 54 8	(12) II	(12) —

X161 Engine Wiring Harness to Fuel Injector Wiring Harness - Right (L84 / L87)

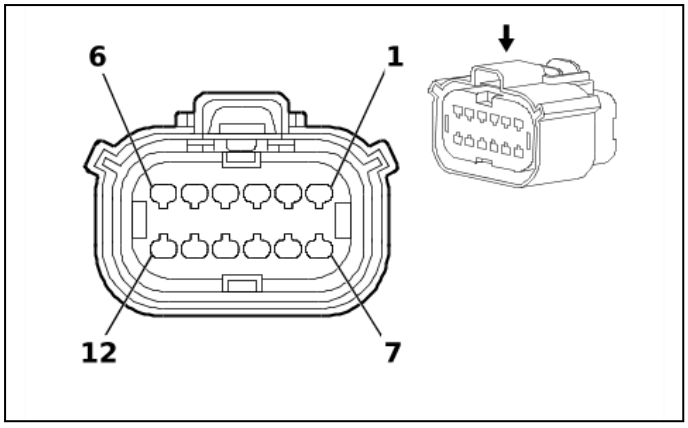

1825165

Connector Part Information
- Harness Type: Engine Wiring Harness
- OEM Connector: 33472-1226
- Service Connector: 19352907
- Description: 12-Way F 1.5 MX Series, Sealed(BK)

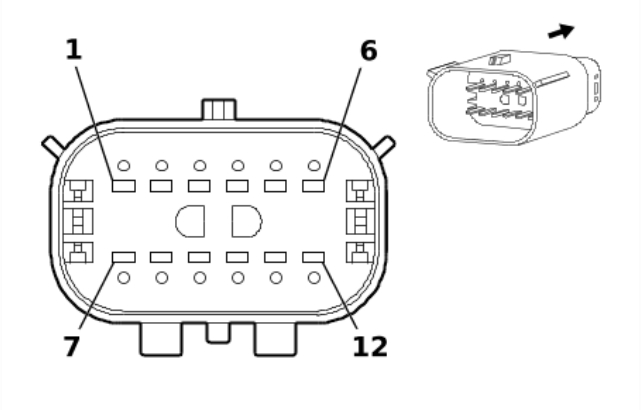

1825167

Connector Part Information
- Harness Type: Fuel Injector Wiring Harness - Right
- OEM Connector: 334826211
- Service Connector: Service by Harness - See Part Catalog
- Description: 12-Way M 1.5 MX Series, Sealed(BK)

Terminal Part Information

Terminal Type ID	Terminated Lead	Diagnostic Test Probe	Terminal Removal Tool
I	85528055	J-35616-2A (GY)	J-38125-217
II	Not required	J-35616-3 (GY)	No Tool Required

X161 Engine Wiring Harness to Fuel Injector Wiring Harness - Right (L84 / L87)

Pin	Size	Color	Circuit	Terminal Type ID	Option	Function	Pin	Size	Color	Circuit	Terminal Type ID	Option
(1) 1	(1) 0.75	(1) BU / GY	(1) 490 2	(1) I	(1) —	(1) Direct Fuel Injector High Voltage Supply Cylinder 2	(1) 1	(1) 0.75	(1) BU / GY	(1) 490 2	(1) II	(1) —
(2) 2	(2) 0.75	(2) BU / WH	(2) 490 4	(2) I	(2) —	(2) Direct Fuel Injector High Voltage Supply Cylinder 4	(2) 2	(2) 0.75	(2) BU / WH	(2) 490 4	(2) II	(2) —
(3) 3	(3) 0.75	(3) VT / GY	(3) 490 6	(3) I	(3) —	(3) Direct Fuel Injector High Voltage Supply Cylinder 6	(3) 3	(3) 0.75	(3) VT / GY	(3) 490 6	(3) II	(3) —

Pin	Size	Color	Circuit	Terminal Type ID	Option	Function	Pin	Size	Color	Circuit	Terminal Type ID	Option
(4) 4	(4) 0.75	(4) GY / WH	(4) 4908	(4) I	(4) —	(4) Direct Fuel Injector High Voltage Supply Cylinder 8	(4) 4	(4) 0.75	(4) GY / WH	(4) 4908	(4) II	(4) —
(5) 5	(5) 0.75	(5) BU	(5) 4802	(5) I	(5) —	(5) Direct Fuel Injector High Voltage Control Cylinder 2	(5) 5	(5) 0.75	(5) BU	(5) 4802	(5) II	(5) —
6 - 7	—	—	—	—	—	Not Occupied	6 - 7	—	—	—	—	—
(8) 8	(8) 0.75	(8) GY / BU	(8) 4804	(8) I	(8) —	(8) Direct Fuel Injector High Voltage Control Cylinder 4	(8) 8	(8) 0.75	(8) GY / BU	(8) 4804	(8) II	(8) —
(9) 9	(9) 0.75	(9) VT / GN	(9) 4806	(9) I	(9) —	(9) Direct Fuel Injector High Voltage Control Cylinder 6	(9) 9	(9) 0.75	(9) VT / GN	(9) 4806	(9) II	(9) —
(10) 10	(10) 0.75	(10) GY	(10) 4808	(10) I	(10) —	(10) Direct Fuel Injector High Voltage Control Cylinder 8	(10) 10	(10) 0.75	(10) GY	(10) 4808	(10) II	(10) —
(11) 11	(11) 0.75	(11) VT / BK	(11) 7300	(11) I	(11) —	(11) High Pressure Fuel Pump Low Control	(11) 11	(11) 0.75	(11) VT / BK	(11) 7300	(11) II	(11) —
(12) 12	(12) 0.75	(12) YE	(12) 7301	(12) I	(12) —	(12) High Pressure Fuel Pump High Control	(12) 12	(12) 0.75	(12) YE	(12) 7301	(12) II	(12) —

X163 Engine Wiring Harness to Diesel Glow Plug Wiring Harness (LZ0)

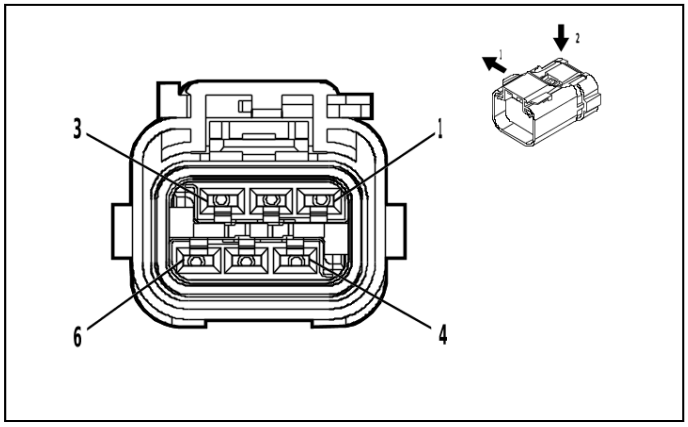

4997615

Connector Part Information
- Harness Type: Engine Wiring Harness
- OEM Connector: 35063643
- Service Connector: 86825462
- Description: 6-Way F 2.8 APEX Series, Sealed(BK)

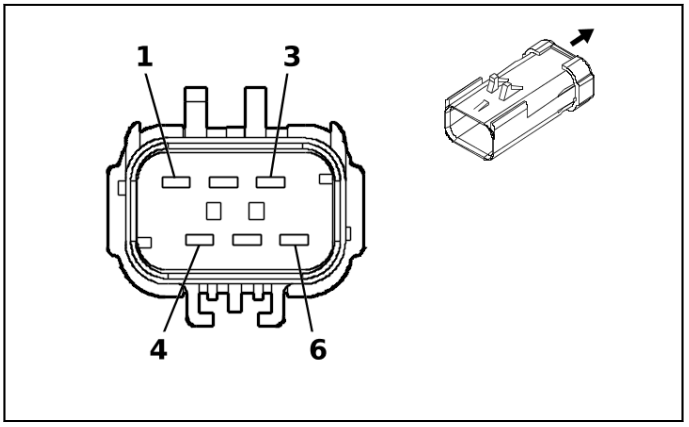

5187846

Connector Part Information
- Harness Type: Diesel Glow Plug Wiring Harness
- OEM Connector: 54200612
- Service Connector: Service by Harness - See Part Catalog
- Description: 6-Way M 2.8 APEX Series, Sealed(BK)

Terminal Part Information

Terminal Type ID	Terminated Lead	Diagnostic Test Probe	Terminal Removal Tool
I	Not required	J-35616-4A (PU)	No Tool Required
II	Not required	J-35616-5 (PU)	No Tool Required

X163 Engine Wiring Harness to Diesel Glow Plug Wiring Harness (LZ0)

Pin	Size	Color	Circuit	Terminal Type ID	Option	Function	Pin	Size	Color	Circuit	Terminal Type ID	Option
(1) 1	(1) 2.5	(1) GY / BU	(1) 158 1	(1) I	(1) —	(1) Glow Plug 1 Control	(1) 1	(1) 2.5	(1) GY / RD	(1) 158 1	(1) II	(1) —
(2) 2	(2) 2.5	(2) GY / BN	(2) 158 2	(2) I	(2) —	(2) Glow Plug 2 Control	(2) 2	(2) 2.5	(2) GY / BK	(2) 158 2	(2) II	(2) —
(3) 3	(3) 2.5	(3) GY / GN	(3) 158 3	(3) I	(3) —	(3) Glow Plug 3 Control	(3) 3	(3) 2.5	(3) GY / GN	(3) 158 3	(3) II	(3) —
(4) 4	(4) 2.5	(4) GY / YE	(4) 158 4	(4) I	(4) —	(4) Glow Plug 4 Control	(4) 4	(4) 2.5	(4) GY / YE	(4) 158 4	(4) II	(4) —
(5) 5	(5) 2.5	(5) GY / WH	(5) 158 5	(5) I	(5) —	(5) Glow Plug 5 Control	(5) 5	(5) 2.5	(5) GY / WH	(5) 158 5	(5) II	(5) —
(6) 6	(6) 2.5	(6) GY / VT	(6) 158 6	(6) I	(6) —	(6) Glow Plug 6 Control	(6) 6	(6) 2.5	(6) GY	(6) 158 6	(6) II	(6) —

X176 Automatic Transmission Wiring Harness to Automatic Transmission Wiring Harness

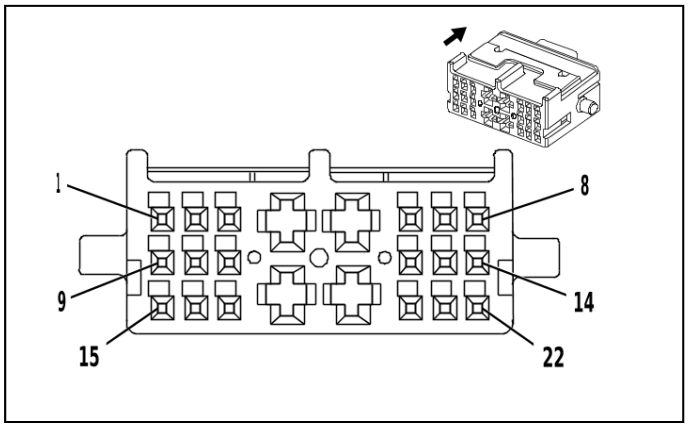

3977748

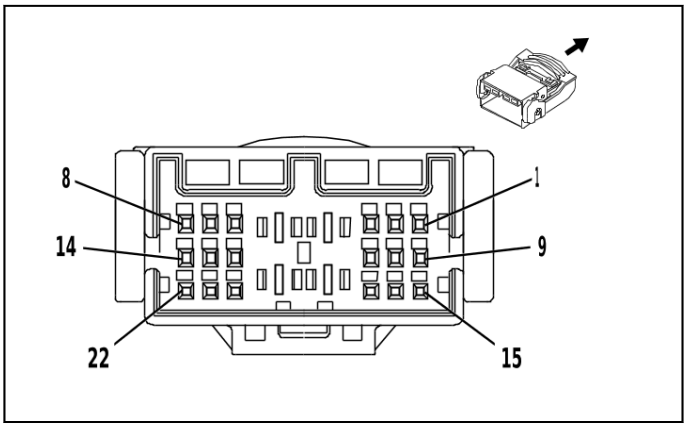

3977770

Connector Part Information
- Harness Type: Automatic Transmission Wiring Harness
- OEM Connector: 1897543-1
- Service Connector: Service by Harness - See Part Catalog
- Description: 22-Way F 0.64 Micro-Quadlock, 2.8 Micro-Power Series(NA)

Connector Part Information
- Harness Type: Automatic Transmission Wiring Harness
- OEM Connector: Not Available
- Service Connector: Service by Harness - See Part Catalog
- Description: 22-Way M (NA)

Terminal Part Information

Terminal Type ID	Terminated Lead	Diagnostic Test Probe	Terminal Removal Tool
I	Not required	J-35616-35 (VT)	No Tool Required
II	Not required	J-35616-64B (L-BU)	No Tool Required
III	Not required	No Tool Required	No Tool Required

X176 Automatic Transmission Wiring Harness to Automatic Transmission Wiring Harness

Pin	Size	Color	Circuit	Terminal Type ID	Option	Function	Pin	Size	Color	Circuit	Terminal Type ID	Option
(1) 1	(1) 0.5	(1) VT	(1) 7819	(1) II	(1) —	(1) Default Disable Solenoid Control	(1) 1	(1) 0.5	(1) VT	(1) 7819	(1) III	(1) —
(2) 2	(2) 0.5	(2) GN / OG	(2) 1530	(2) II	(2) —	(2) Transmission Line Pressure Control Solenoid Valve Control	(2) 2	(2) 0.5	(2) GN / OG	(2) 1530	(2) III	(2) —
(3) 3	(3) 0.5	(3) GY / BN	(3) 422	(3) II	(3) —	(3) Torque Converter Clutch Solenoid Valve Control	(3) 3	(3) 0.5	(3) GY / BN	(3) 422	(3) III	(3) —
(4) 4	(4) 0.5	(4) BN	(4) 6387	(4) I	(4) —	(4) Transmission High Side Driver 1 Control	(4) 4	(4) 0.5	(4) BN	(4) 6387	(4) III	(4) —
5	—	—	—	—	—	Not Occupied	5	—	—	—	—	—
(6) 6	(6) 0.5	(6) YE	(6) 6317	(6) II	(6) —	(6) Electronic Transmission Range Select Out of Park Switch Signal	(6) 6	(6) 0.5	(6) YE	(6) 6317	(6) III	(6) —
(7) 7	(7) 0.5	(7) YE / GY	(7) 6319	(7) II	(7) —	(7) Electronic Transmission Range Select Out of Park Switch 2 Signal	(7) 7	(7) 0.5	(7) YE / GY	(7) 6319	(7) III	(7) —
(8) 8	(8) 0.5	(8) GN	(8) 4170	(8) II	(8) —	(8) Transmission Output Shaft Speed Sensor Circuit 9V Reference	(8) 8	(8) 0.5	(8) GN	(8) 4170	(8) III	(8) —
(9) 9	(9) 0.5	(9) OG	(9) 2159	(9) II	(9) —	(9) Park Inhibit Solenoid Assembly Control	(9) 9	(9) 0.5	(9) OG	(9) 2159	(9) III	(9) —
(10) 10	(10) 0.5	(10) BK / GY	(10) 3706	(10) II	(10) —	(10) Electronic Transmission Range Select Switch Analog Signal 1	(10) 10	(10) 0.5	(10) BK / GY	(10) 3706	(10) III	(10) —
(11) 11	(11) 0.5	(11) BU	(11) 4171	(11) II	(11) —	(11) Transmission Input Shaft Speed Sensor Circuit 9V Reference	(11) 11	(11) 0.5	(11) BU	(11) 4171	(11) III	(11) —
12	—	—	—	—	—	Not Occupied	12	—	—	—	—	—
(13) 13	(13) 0.5	(13) BU / BN	(13) 586	(13) II	(13) —	(13) Transmission Fluid Temperature Sensor Low Reference	(13) 13	(13) 0.5	(13) BU / BN	(13) 586	(13) III	(13) —

Pin	Size	Color	Circuit	Terminal Type ID	Option	Function	Pin	Size	Color	Circuit	Terminal Type ID	Option
(14) 14	(14) 0.5	(14) B N / YE	(14) 58 5	(14) II	(14) —	(14) Transmission Fluid Temperature Sensor Signal	(14) 14	(14) 0.5	(14) B N / YE	(14) 58 5	(14) III	(14) —
(15) 15	(15) 0.5	(15) B U / GN	(15) 64 04	(15) II	(15) —	(15) Clutch Solenoid Valve E Control	(15) 15	(15) 0.5	(15) B U / GN	(15) 64 04	(15) III	(15) —
(16) 16	(16) 0.5	(16) G N / BN	(16) 64 03	(16) II	(16) —	(16) Clutch Solenoid Valve D Control	(16) 16	(16) 0.5	(16) G N / BN	(16) 64 03	(16) III	(16) —
(17) 17	(17) 0.5	(17) G Y	(17) 64 02	(17) II	(17) —	(17) Clutch Solenoid Valve C Control	(17) 17	(17) 0.5	(17) G Y	(17) 64 02	(17) III	(17) —
(18) 18	(18) 0.5	(18) WH	(18) 63 88	(18) I	(18) —	(18) Transmission High Side Driver 2 Control	(18) 18	(18) 0.5	(18) WH	(18) 63 88	(18) III	(18) —
19	—	—	—	—	—	Not Occupied	19	—	—	—	—	—
(20) 20	(20) 0.5	(20) B N / WH	(20) 45 09	(20) II	(20) —	(20) Transmission Clutch F Control	(20) 20	(20) 0.5	(20) B N / WH	(20) 45 09	(20) III	(20) —
(21) 21	(21) 0.5	(21) Y E / VT	(21) 45 07	(21) II	(21) —	(21) Transmission Clutch H Control	(21) 21	(21) 0.5	(21) Y E / VT	(21) 45 07	(21) III	(21) —
(22) 22	(22) 0.5	(22) B U / GY	(22) 45 08	(22) II	(22) —	(22) Transmission Clutch G Control	(22) 22	(22) 0.5	(22) B U / GY	(22) 45 08	(22) III	(22) —

X177 Automatic Transmission Wiring Harness to Automatic Transmission Wiring Harness

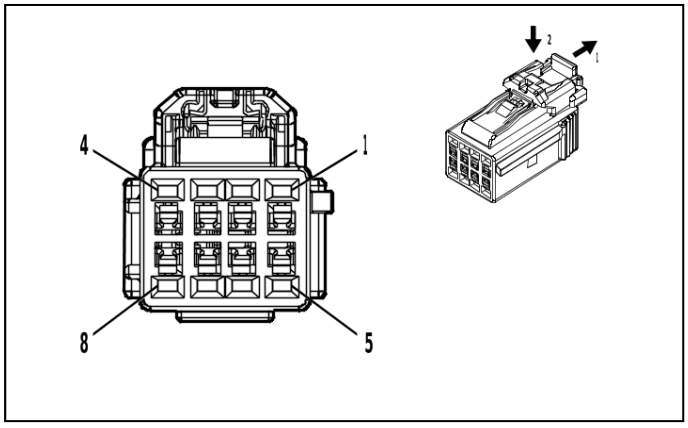

5086387

Connector Part Information

- Harness Type: Automatic Transmission Wiring Harness
- OEM Connector: 6098-8632
- Service Connector: Service by Harness - See Part Catalog
- Description: 8-Way F 1.2 Series

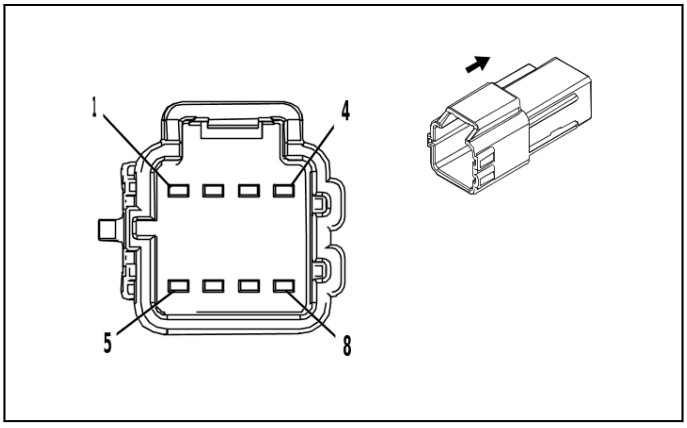

4331672

Connector Part Information

- Harness Type: Automatic Transmission Wiring Harness
- OEM Connector: 6098-8630
- Service Connector: Service by Harness - See Part Catalog
- Description: 8-Way M 1.2 Series

Terminal Part Information

Terminal Type ID	Terminated Lead	Diagnostic Test Probe	Terminal Removal Tool
I	Not required	J-35616-16 (L-GN)	No Tool Required
II	Not required	J-35616-12 (BU)	No Tool Required

X177 Automatic Transmission Wiring Harness to Automatic Transmission Wiring Harness

Pin	Size	Color	Circuit	Terminal Type ID	Option	Function	Pin	Size	Color	Circuit	Terminal Type ID	Option
(1) 1	(1) 0.5	(1) BN	(1) 6387	(1) I	(1) —	(1) Transmission High Side Driver 1 Control	(1) 1	(1) 0.5	(1) BN	(1) 6387	(1) II	(1) —
(2) 2	(2) 0.5	(2) GN / OG	(2) 1530	(2) I	(2) —	(2) Transmission Line Pressure Control Solenoid Valve Control	(2) 2	(2) 0.5	(2) GN / OG	(2) 1530	(2) II	(2) —
(3) 3	(3) 0.5	(3) GY / BN	(3) 422	(3) I	(3) —	(3) Torque Converter Clutch Solenoid Valve Control	(3) 3	(3) 0.5	(3) GY / BN	(3) 422	(3) II	(3) —
(4) 4	(4) 0.5	(4) VT	(4) 7819	(4) I	(4) —	(4) Default Disable Solenoid Control	(4) 4	(4) 0.5	(4) VT	(4) 7819	(4) II	(4) —
(5) 5	(5) 0.5	(5) BK / GY	(5) 3706	(5) I	(5) —	(5) Electronic Transmission Range Select Switch Analog Signal 1	(5) 5	(5) 0.5	(5) BK / GY	(5) 3706	(5) II	(5) —
(6) 6	(6) 0.5	(6) BU	(6) 4171	(6) I	(6) —	(6) Transmission Input Shaft Speed Sensor Circuit 9V Reference	(6) 6	(6) 0.5	(6) BU	(6) 4171	(6) II	(6) —
(7) 7	(7) 0.5	(7) WH	(7) 6388	(7) I	(7) —	(7) Transmission High Side Driver 2 Control	(7) 7	(7) 0.5	(7) WH	(7) 6388	(7) II	(7) —
8	—	—	—	—	—	Not Occupied	8	—	—	—	—	—

X210 Instrument Panel Wiring Harness to Body Wiring Harness

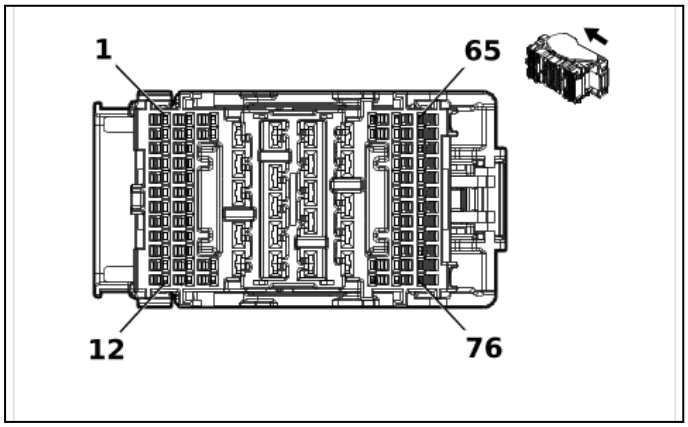

6171454

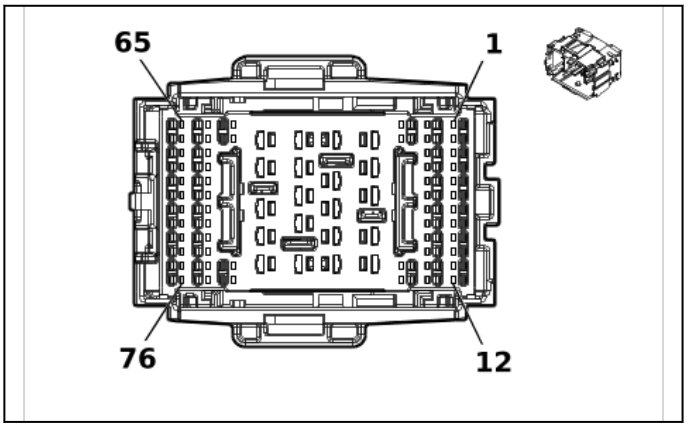

6171465

Connector Part Information

- Harness Type: Instrument Panel Wiring Harness
- OEM Connector: 6099-0188
- Service Connector: 85026856
- Description: 76-Way F 1.2 Sumitomo, 2.8 YESC Series(BK)

Connector Part Information

- Harness Type: Body Wiring Harness
- OEM Connector: 6099-0184
- Service Connector: 13549030
- Description: 76-Way M 1.2 Sumitomo, 2.8 YESC Series(BK)

Terminal Part Information

Terminal Type ID	Terminated Lead	Diagnostic Test Probe	Terminal Removal Tool
I	84962854	J-35616-12 (BU)	J-38125-215A
II	84962855	J-35616-4A (PU)	J-38125-11A
III	Service by Cable	J-35616-12 (BU)	J-38125-215A
IV	84616651	J-35616-13 (BU)	J-38125-215A
V	84888592	J-35616-5 (PU)	J-38125-11A
VI	Service by Cable	J-35616-13 (BU)	J-38125-215A

X210 Instrument Panel Wiring Harness to Body Wiring Harness

Pin	Size	Color	Circuit	Terminal Type ID	Option	Function	Pin	Size	Color	Circuit	Terminal Type ID	Option
(1) 1	(1) 0.35	(1) BU / BN	(1) 7744	(1) I	(1) —	(1) Driver Illumination Lamp Ground	(1) 1	(1) 0.35	(1) BU / BN	(1) 7744	(1) IV	(1) —
(2) 2	(2) 0.35	(2) WH / VT	(2) 2246	(2) I	(2) —	(2) Driver Illumination Lamp 1 Control	(2) 2	(2) 0.35	(2) WH / VT	(2) 2246	(2) IV	(2) —
(3) 3	(3) 0.35	(3) YE / BU	(3) 2245	(3) I	(3) —	(3) Driver Illumination Lamp 2 Control	(3) 3	(3) 0.35	(3) YE / BU	(3) 2245	(3) IV	(3) —
4 - 5	—	—	—	—	—	Not Occupied	4 - 5	—	—	—	—	—
(6) 6	(6) 0.35	(6) GN / WH	(6) 2854	(6) I	(6) —	(6) Body Control Module LIN Bus 8	(6) 6	(6) 0.35	(6) GN / WH	(6) 2854	(6) IV	(6) —
7	—	—	—	—	—	Not Occupied	7	—	—	—	—	—

Pin	Size	Color	Circuit	Terminal Type ID	Option	Function	Pin	Size	Color	Circuit	Terminal Type ID	Option
(8) 8	(8) 0.75	(8) BU / BK	(8) 115	(8) I	(8) —	(8) Right Rear Speaker [-] Control	(8) 8	(8) 0.75	(8) BU / BK	(8) 115	(8) IV	(8) —
(9) 9	(9) 0.75	(9) W H	(9) 46	(9) I	(9) —	(9) Right Rear Speaker [+] Control	(9) 9	(9) 0.75	(9) W H	(9) 46	(9) IV	(9) —
10	—	—	—	—	—	Not Occupied	10	—	—	—	—	—
(11) 11	(11) 0.35	(11) G N	(11) 85 79	(11) III	(11) —	(11) Automotive Audio Bus A2B Serial Data 1 [-]	(11) 11	(11) 0.35	(11) G N	(11) 85 79	(11) VI	(11) —
(12) 12	(12) 0.35	(12) WH	(12) 85 80	(12) III	(12) —	(12) Automotive Audio Bus A2B Serial Data 1 [+]	(12) 12	(12) 0.35	(12) WH	(12) 85 80	(12) VI	(12) —
13	—	—	—	—	—	Not Occupied	13	—	—	—	—	—
(14) 14	(14) 0.35 (14) 0.5	(14) WH (14) WH	(14) 49 78 (14) 49 78	(14) I (14) I	(14) - UK0 (14) UK0	(14) AUTOSAR CAN Bus [-] 2 Serial Data (14) AUTOSAR CAN Bus [-] 2 Serial Data	(14) 14	(14) 0.35 (14) 0.5	(14) WH (14) WH	(14) 49 78 (14) 49 78	(14) IV (14) IV	(14) - UK0 (14) UK0
(15) 15	(15) 0.5	(15) Y E / BK	(15) 11 7	(15) I	(15) —	(15) Right Front Speaker [-] Control 1 (15) Right Front Speaker [-] Control 1	(15) 15	(15) 0.75 (15) 0.5	(15) Y E / BK (15) Y E / BK	(15) 11 7 (15) 11 7	(15) IV (15) IV	(15) UQP (15) UQF
(16) 16	(16) 0.5	(16) Y E	(16) 20 0	(16) I	(16) —	(16) Right Front Speaker 1 [+] Control (16) Right Front Speaker 1 [+] Control	(16) 16	(16) 0.75 (16) 0.5	(16) Y E (16) Y E	(16) 20 0 (16) 20 0	(16) IV (16) IV	(16) UQP (16) UQF
(17) 17	(17) 0.35	(17) Y E	(17) 68 12	(17) I	(17) —	(17) Out of Park Signal	(17) 17	(17) 0.5	(17) Y E	(17) 68 12	(17) IV	(17) —
(18) 18	(18) 0.5	(18) V T / WH	(18) 63 9	(18) I	(18) —	(18) Run/ Crank Ignition 1 Voltage	(18) 18	(18) 0.5	(18) V T / WH	(18) 63 9	(18) IV	(18) —
(19) 19	(19) 0.35	(19) WH / YE	(19) 46 34	(19) I	(19) —	(19) HVAC Remote Enable Signal	(19) 19	(19) 0.35	(19) WH / YE	(19) 46 34	(19) IV	(19) —
(20) 20	(20) 0.75	(20) G N / BK	(20) 11 6	(20) I	(20) —	(20) Left Rear Speaker [-] Control	(20) 20	(20) 0.75	(20) G N / BK	(20) 11 6	(20) IV	(20) —
(21) 21	(21) 0.75	(21) G N	(21) 19 9	(21) I	(21) —	(21) Left Rear Speaker [+] Control	(21) 21	(21) 0.75	(21) G N	(21) 19 9	(21) IV	(21) —
22 - 25	—	—	—	—	—	Not Occupied	22 - 25	—	—	—	—	—

Pin	Size	Color	Circuit	Terminal Type ID	Option	Function	Pin	Size	Color	Circuit	Terminal Type ID	Option
(26) 26	(26) 0.35 (26) 0.5	(26) B U / YE (26) B U / YE	(26) 49 79 (26) 49 79	(26) I (26) I	(26) - UGN (26) UGN	(26) AUTOSA R CAN Bus [+] 2 Serial Data (26) AUTOSA R CAN Bus [+] 2 Serial Data	(26) 26	(26) 0.35 (26) 0.5	(26) B U / YE (26) B U / YE	(26) 49 79 (26) 49 79	(26) IV (26) IV	(26) - UGN (26) UGN
27 - 29	—	—	—	—	—	Not Occupied	27 - 29	—	—	—	—	—
(30) 30	(30) 0.35	(30) B U / RD	(30) 46 0	(30) II	(30) —	(30) Engine Control Sensors 5 Volt Reference 1	(30) 30	(30) 0.5	(30) B U / RD	(30) 46 0	(30) V	(30) —
(31) 31	(31) 0.35	(31) B N	(31) 10 515	(31) II	(31) —	(31) Electronic Transmission Range Select Shifter Position Sensor 1 Signal	(31) 31	(31) 0.5	(31) B N	(31) 10 515	(31) V	(31) —
(32) 32	(32) 0.35	(32) B K / YE	(32) 54 8	(32) II	(32) —	(32) Engine Control Sensors Low Reference 1	(32) 32	(32) 0.5	(32) B K / YE	(32) 54 8	(32) V	(32) —
(33) 33	(33) 0.35	(33) WH / RD	(33) 48 0	(33) II	(33) —	(33) Engine Control Vehicle Sensors 5 Volt Reference 1	(33) 33	(33) 0.5	(33) WH / RD	(33) 48 0	(33) V	(33) —
34 - 35	—	—	—	—	—	Not Occupied	34 - 35	—	—	—	—	—
(36) 36	(36) 0.35	(36) G Y	(36) 10 518	(36) II	(36) —	(36) Electronic Transmission Range Select Shifter Position Sensor 2 Signal	(36) 36	(36) 0.5	(36) G Y	(36) 10 518	(36) V	(36) —
(37) 37	(37) 0.35	(37) B K / GN	(37) 58 0	(37) II	(37) —	(37) Engine Control Sensors Low Reference 2	(37) 37	(37) 0.5	(37) B K / GN	(37) 58 0	(37) V	(37) —
(38) 38	(38) 0.75	(38) WH / YE	(38) 18 53	(38) II	(38) —	(38) Right Front Midrange Speaker [+] Control	(38) 38	(38) 0.75	(38) WH / YE	(38) 18 53	(38) V	(38) —
39	—	—	—	—	—	Not Occupied	39	—	—	—	—	—
(40) 40	(40) 0.35	(40) B U / YE	(40) 49 79	(40) II	(40) —	(40) AUTOSA R CAN Bus [+] 2 Serial Data	(40) 40	(40) 0.35	(40) B U / YE	(40) 49 79	(40) V	(40) —
(41) 41	(41) 0.35	(41) WH	(41) 49 78	(41) II	(41) —	(41) AUTOSA R CAN Bus [-] 2 Serial Data	(41) 41	(41) 0.35	(41) WH	(41) 49 78	(41) V	(41) —
42	—	—	—	—	—	Not Occupied	42	—	—	—	—	—

Pin	Size	Color	Circuit	Terminal Type ID	Option	Function	Pin	Size	Color	Circuit	Terminal Type ID	Option
(43) 43	(43) 0.75	(43) BN / BK	(43) 1953	(43) II	(43) —	(43) Right Front Midrange Speaker [-] Control	(43) 43	(43) 0.75	(43) BN / BK	(43) 1953	(43) V	(43) —
44 - 50	—	—	—	—	—	Not Occupied	44 - 50	—	—	—	—	—
(51) 51	(51) 0.35	(51) BU / VT	(51) 807	(51) I	(51) —	(51) Ignition Off/Accessory Ignition Voltage	(51) 51	(51) 0.35	(51) BU / VT	(51) 807	(51) IV	(51) —
52 - 59	—	—	—	—	—	Not Occupied	52 - 59	—	—	—	—	—
(60) 60	(60) 0.35	(60) YE / WH	(60) 1690	(60) I	(60) —	(60) Mirror Dimming Signal	(60) 60	(60) 0.35	(60) YE / WH	(60) 1690	(60) IV	(60) —
(61) 61	(61) 0.35	(61) BK / YE	(61) 1691	(61) I	(61) —	(61) Automatic Day/Night Mirror Low Reference	(61) 61	(61) 0.35	(61) BK / YE	(61) 1691	(61) IV	(61) —
(62) 62	(62) 0.5	(62) WH / GY	(62) 4104	(62) I	(62) —	(62) AUTOSAR CAN Bus [-] 8 Serial Data	(62) 62	(62) 0.5	(62) WH / GY	(62) 4104	(62) IV	(62) —
(63) 63	(63) 0.5	(63) BU / GY	(63) 4105	(63) I	(63) —	(63) AUTOSAR CAN Bus [+] 8 Serial Data	(63) 63	(63) 0.5	(63) BU / GY	(63) 4105	(63) IV	(63) —
(64) 64	(64) 0.35	(64) GN / WH	(64) 4622	(64) I	(64) —	(64) Engine Control Module LIN Bus 2	(64) 64	(64) 0.35	(64) GN / WH	(64) 4622	(64) IV	(64) —
65	—	—	—	—	—	Not Occupied	65	—	—	—	—	—
(66) 66	(66) 0.35	(66) WH / GY	(66) 4104	(66) I	(66) —	(66) AUTOSAR CAN Bus [-] 8 Serial Data	(66) 66	(66) 0.35	(66) WH / GY	(66) 4104	(66) IV	(66) —
(67) 67	(67) 0.35	(67) BU / GY	(67) 4105	(67) I	(67) —	(67) AUTOSAR CAN Bus [+] 8 Serial Data	(67) 67	(67) 0.35	(67) BU / GY	(67) 4105	(67) IV	(67) —
(68) 68	(68) 0.75	(68) GY / YE	(68) 8897	(68) I	(68) —	(68) Police Relay 3 Control	(68) 68	(68) 0.75	(68) GY / YE	(68) 8897	(68) IV	(68) —
69 - 74	—	—	—	—	—	Not Occupied	69 - 74	—	—	—	—	—
(75) 75	(75) 0.35	(75) GN / GY	(75) 11023	(75) I	(75) —	(75) Image Processing Module LIN Bus 1	(75) 75	(75) 0.35	(75) GN / GY	(75) 11023	(75) IV	(75) —
(76) 76	(76) 0.35	(76) GY / GN	(76) 4083	(76) I	(76) —	(76) Retained Accessory Power Relay 2 Coil Control	(76) 76	(76) 0.35	(76) GY / GN	(76) 4083	(76) IV	(76) —

X211 Instrument Panel Wiring Harness to Body Wiring Harness

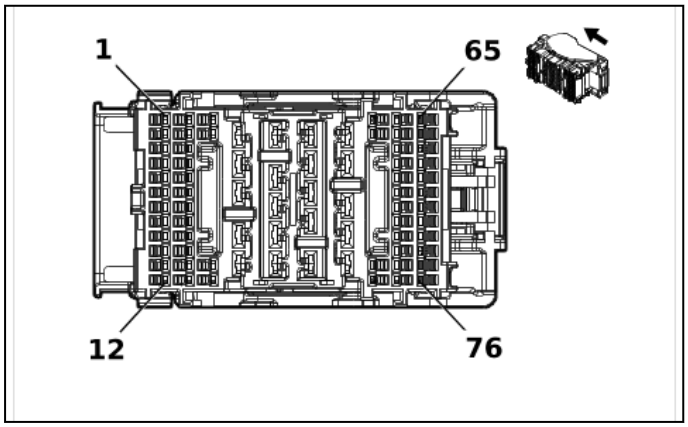

6171454

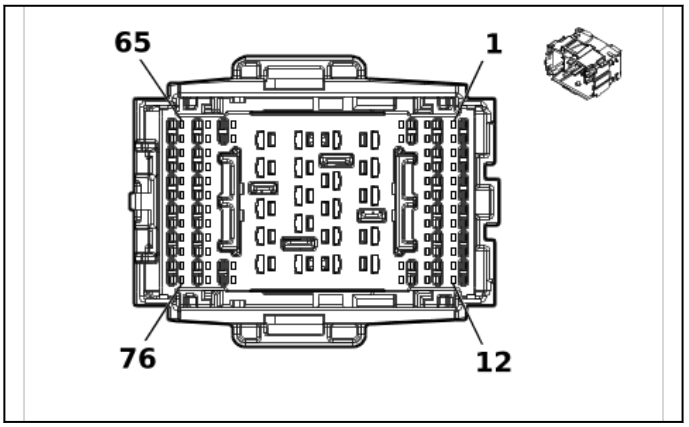

6171465

Connector Part Information

- Harness Type: Instrument Panel Wiring Harness
- OEM Connector: 6099-0188
- Service Connector: 85026856
- Description: 76-Way F 1.2 Sumitomo, 2.8 YESC Series(BK)

Connector Part Information

- Harness Type: Body Wiring Harness
- OEM Connector: 6099-0184
- Service Connector: 13549030
- Description: 76-Way M 1.2 Sumitomo, 2.8 YESC Series(BK)

Terminal Part Information

Terminal Type ID	Terminated Lead	Diagnostic Test Probe	Terminal Removal Tool
I	84962854	J-35616-12 (BU)	J-38125-215A
II	84962855	J-35616-4A (PU)	J-38125-11A
III	84616651	J-35616-13 (BU)	J-38125-215A
IV	84888592	J-35616-5 (PU)	J-38125-11A

X211 Instrument Panel Wiring Harness to Body Wiring Harness

Pin	Size	Color	Circuit	Terminal Type ID	Option	Function	Pin	Size	Color	Circuit	Terminal Type ID	Option
(1) 1	(1) 0.5 (1) 0.35	(1) BU / VT (1) BN / BK	(1) 8900 (1) 4996	(1) I (1) I	(1) 5W4 / 9C1 (1) AZ3	(1) Police Microphone Input Signal (1) Immobilizer Antenna Signal [+]	(1) 1	(1) 0.5 (1) 0.5	(1) BU / VT (1) BN / BK	(1) 8900 (1) 4996	(1) III (1) III	(1) 5W4 / 9C1 (1) AZ3
(2) 2	(2) 0.35 (2) 0.35	(2) BN / GY (2) WH / GY	(2) 8021 (2) 4997	(2) I (2) I	(2) 5W4 / 9C1 (2) AZ3	(2) Police Microphone Enable Signal (2) Immobilizer Antenna Low Signal	(2) 2	(2) 0.35 (2) 0.5	(2) BN / GY (2) WH / GY	(2) 8021 (2) 4997	(2) III (2) III	(2) 5W4 / 9C1 (2) AZ3
3	—	—	—	—	—	Not Occupied	3	—	—	—	—	—
(4) 4	(4) 0.5	(4) BN / WH	(4) 3895	(4) I	(4) —	(4) Roof Rail Air Bag Disable Switch Low Reference	(4) 4	(4) 0.5	(4) BN / WH	(4) 3895	(4) III	(4) —
(5) 5	(5) 0.35	(5) WH / GY	(5) 4104	(5) I	(5) —	(5) AUTOSAR CAN Bus [-] 8 Serial Data	(5) 5	(5) 0.35	(5) WH / GY	(5) 4104	(5) III	(5) —

Pin	Size	Color	Circuit	Terminal Type ID	Option	Function	Pin	Size	Color	Circuit	Terminal Type ID	Option
(6) 6	(6) 0.35	(6) BU / GY	(6) 4105	(6) I	(6) —	(6) AUTOSAR CAN Bus [+] 8 Serial Data	(6) 6	(6) 0.35	(6) BU / GY	(6) 4105	(6) III	(6) —
(7) 7	(7) 0.35	(7) GY	(7) 1715	(7) I	(7) —	(7) Windshield Wiper Switch High Signal	(7) 7	(7) 0.35	(7) GY	(7) 1715	(7) III	(7) —
(8) 8	(8) 0.35	(8) WH	(8) 4978	(8) I	(8) —	(8) AUTOSAR CAN Bus [-] 2 Serial Data	(8) 8	(8) 0.35	(8) WH	(8) 4978	(8) III	(8) —
(9) 9	(9) 0.35	(9) BU / YE	(9) 4979	(9) I	(9) —	(9) AUTOSAR CAN Bus [+] 2 Serial Data	(9) 9	(9) 0.35	(9) BU / YE	(9) 4979	(9) III	(9) —
(10) 10	(10) 0.75	(10) GN / YE	(10) 8896	(10) I	(10) —	(10) Police Relay 2 Control	(10) 10	(10) 0.75	(10) GN / YE	(10) 8896	(10) III	(10) —
(11) 11	(11) 0.35	(11) WH	(11) 4986	(11) I	(11) —	(11) AUTOSAR CAN Bus [-] 1 Serial Data	(11) 11	(11) 0.5	(11) WH	(11) 4986	(11) III	(11) —
(12) 12	(12) 0.35	(12) BU	(12) 4987	(12) I	(12) —	(12) AUTOSAR CAN Bus [+] 1 Serial Data	(12) 12	(12) 0.5	(12) BU	(12) 4987	(12) III	(12) —
13	—	—	—	—	—	Not Occupied	13	—	—	—	—	—
(14) 14	(14) 0.5	(14) GN / YE	(14) 2731	(14) I	(14) —	(14) Brake System Control Module LIN Bus 1	(14) 14	(14) 0.5	(14) GN / YE	(14) 2731	(14) III	(14) —
(15) 15	(15) 0.35	(15) GN / VT	(15) 5199	(15) I	(15) —	(15) Run/ Crank Relay Coil Control	(15) 15	(15) 0.5	(15) GN / VT	(15) 5199	(15) III	(15) —
16	—	—	—	—	—	Not Occupied	16	—	—	—	—	—
(17) 17	(17) 0.5	(17) BU / WH	(17) 3119	(17) I	(17) —	(17) Roof Rail Air Bag Disable Switch Signal	(17) 17	(17) 0.5	(17) BU / WH	(17) 3119	(17) III	(17) —
(18) 18	(18) 0.35	(18) GN / BN	(18) 2853	(18) I	(18) —	(18) Body Control Module LIN Bus 7	(18) 18	(18) 0.35	(18) GN / BN	(18) 2853	(18) III	(18) —
(19) 19	(19) 0.35	(19) WH	(19) 4976	(19) I	(19) —	(19) AUTOSAR CAN Bus [-] 3 Serial Data	(19) 19	(19) 0.5	(19) WH	(19) 4976	(19) III	(19) —
(20) 20	(20) 0.35	(20) BU / BK	(20) 4977	(20) I	(20) —	(20) AUTOSAR CAN Bus [+] 3 Serial Data	(20) 20	(20) 0.5	(20) BU / BK	(20) 4977	(20) III	(20) —
(21) 21	(21) 0.5	(21) OG / VT	(21) 3026	(21) I	(21) —	(21) Passenger Instrument Panel Air Bag Stage 2 Low Control	(21) 21	(21) 0.5	(21) OG / VT	(21) 3026	(21) III	(21) —
(22) 22	(22) 0.5	(22) GY / OG	(22) 3027	(22) I	(22) —	(22) Passenger Instrument Panel Air Bag Stage 2 High Control	(22) 22	(22) 0.5	(22) GY / OG	(22) 3027	(22) III	(22) —

Pin	Size	Color	Circuit	Terminal Type ID	Option	Function	Pin	Size	Color	Circuit	Terminal Type ID	Option
(23) 23	(23) 0.5 (23) 0.35	(23) WH (23) WH	(23) 49 86 (23) 49 86	(23) I (23) I	(23) - APD (23) APD	(23) AUTOSAR CAN Bus [-] 1 Serial Data (23) AUTOSAR CAN Bus [-] 1 Serial Data	(23) 23	(23) 0.5	(23) WH	(23) 49 86	(23) III	(23) —
(24) 24	(24) 0.35 (24) 0.5	(24) BU (24) BU	(24) 49 87 (24) 49 87	(24) I (24) I	(24) - APD (24) APD	(24) AUTOSAR CAN Bus [+] 1 Serial Data (24) AUTOSAR CAN Bus [+] 1 Serial Data	(24) 24	(24) 0.5	(24) BU	(24) 49 87	(24) III	(24) —
25	—	—	—	—	—	Not Occupied	25	—	—	—	—	—
(26) 26	(26) 0.35 (26) 0.5	(26) GN / WH (26) GN / WH	(26) 24 (26) 24	(26) I (26) I	(26) - (DD8 / DRZ) (26) DD8 / DRZ	(26) Backup Lamp Control (26) Backup Lamp Control	(26) 26	(26) 0.5	(26) GN / WH	(26) 24	(26) III	(26) —
27 - 29	—	—	—	—	—	Not Occupied	27 - 29	—	—	—	—	—
(30) 30	(30) 1.5	(30) BK / WH	(30) 14 51	(30) II	(30) —	(30) Signal Ground	(30) 30	(30) 2	(30) BK / WH	(30) 14 51	(30) IV	(30) —
(31) 31	(31) 0.35	(31) BU / WH	(31) 49 85	(31) II	(31) —	(31) AUTOSAR CAN Bus [+] 5 Serial Data	(31) 31	(31) 0.35	(31) BU / WH	(31) 49 85	(31) IV	(31) —
(32) 32	(32) 0.35	(32) BU / YE	(32) 49 84	(32) II	(32) —	(32) AUTOSAR CAN Bus [-] 5 Serial Data	(32) 32	(32) 0.35	(32) BU / YE	(32) 49 84	(32) IV	(32) —
(33) 33	(33) 0.5	(33) BN / BU	(33) 48 92	(33) II	(33) —	(33) Auxiliary Battery Relay Control	(33) 33	(33) 0.5	(33) BN / BU	(33) 48 92	(33) IV	(33) —
(34) 34	(34) 2.5	(34) RD / VT	(34) 12 42	(34) II	(34) —	(34) Battery Positive Voltage	(34) 34	(34) 2.5	(34) RD / VT	(34) 12 42	(34) IV	(34) —
35	—	—	—	—	—	Not Occupied	35	—	—	—	—	—
(36) 36	(36) 0.35	(36) GN / WH	(36) 75 30	(36) II	(36) —	(36) Driver Seat Adjuster Memory Module LIN Bus 1	(36) 36	(36) 0.5	(36) GN / WH	(36) 75 30	(36) IV	(36) —
37	—	—	—	—	—	Not Occupied	37	—	—	—	—	—
(38) 38	(38) 0.35 (38) 0.75	(38) WH / VT (38) YE / WH	(38) 68 21 (38) 18 60	(38) II (38) II	(38) (5W4 / 9C1) (38) AZ3	(38) Surveillance Switch Signal (38) Front Center Speaker [+] Control	(38) 38	(38) 0.75 (38) 1	(38) WH / VT (38) YE / WH	(38) 68 21 (38) 18 60	(38) IV (38) IV	(38) (5W4 / 9C1) (38) AZ3
39	—	—	—	—	—	Not Occupied	39	—	—	—	—	—
(40) 40	(40) 1	(40) RD / GN	(40) 89 11	(40) II	(40) —	(40) Police Select Control 1	(40) 40	(40) 1	(40) RD / GN	(40) 89 11	(40) IV	(40) —

Pin	Size	Color	Circuit	Terminal Type ID	Option	Function	Pin	Size	Color	Circuit	Terminal Type ID	Option
41 - 42	—	—	—	—	—	Not Occupied	41 - 42	—	—	—	—	—
(43) 43	(43) 1 (43) 0.75	(43) R D / YE (43) B U / YE	(43) 89 14 (43) 19 60	(43) II (43) II	(43) (5W4 / 9C1) (43) AZ3	(43) Police Select Control 4 (43) Front Center Speaker [-] Control	(43) 43	(43) 1 (43) 1	(43) R D / YE (43) B U / YE	(43) 89 14 (43) 19 60	(43) IV (43) IV	(43) (5W4 / 9C1) (43) AZ3
(44) 44	(44) 0.75	(44) B U / VT	(44) 18 57	(44) II	(44) —	(44) Left Front Midrange Speaker [+] Control	(44) 44	(44) 0.75	(44) B U / VT	(44) 18 57	(44) IV	(44) —
(45) 45	(45) 0.75	(45) B U / BN	(45) 19 57	(45) II	(45) —	(45) Left Front Midrange Speaker [-] Control	(45) 45	(45) 0.75	(45) B U / BN	(45) 19 57	(45) IV	(45) —
46	—	—	—	—	—	Not Occupied	46	—	—	—	—	—
(47) 47	(47) 0.35	(47) G N / BN	(47) 50 7	(47) II	(47) —	(47) Wait To Start Indicator Control	(47) 47	(47) 0.35	(47) G N / BN	(47) 50 7	(47) IV	(47) —
(48) 48	(48) 2.5	(48) B U	(48) 47	(48) II	(48) —	(48) Trailer Auxiliary Control	(48) 48	(48) 2.5	(48) B U	(48) 47	(48) IV	(48) —
49 - 50	—	—	—	—	—	Not Occupied	49 - 50	—	—	—	—	—
(51) 51	(51) 0.5	(51) Y E	(51) 68 17	(51) I	(51) —	(51) LED Backlight Dimming Control 1	(51) 51	(51) 0.5	(51) Y E	(51) 68 17	(51) III	(51) —
52 - 54	—	—	—	—	—	Not Occupied	52 - 54	—	—	—	—	—
(55) 55	(55) 0.5	(55) B N / BU	(55) 11 8	(55) I	(55) —	(55) Left Front Speaker [-] Control 1 (55) Left Front Speaker [-] Control 1	(55) 55	(55) 0.75 (55) 0.5	(55) B N / BU (55) B N / BU	(55) 11 8 (55) 11 8	(55) III (55) III	(55) UQF (55) UQH
(56) 56	(56) 0.5	(56) Y E / OG	(56) 30 25	(56) I	(56) —	(56) Passenger Instrument Panel Air Bag Stage 1 High Control	(56) 56	(56) 0.5	(56) Y E / OG	(56) 30 25	(56) III	(56) —
(57) 57	(57) 0.35	(57) G Y	(57) 72 8	(57) I	(57) —	(57) Security Indicator Control	(57) 57	(57) 0.5	(57) G Y	(57) 72 8	(57) III	(57) —
(58) 58	(58) 0.5	(58) V T / WH	(58) 23 9	(58) I	(58) —	(58) Run/ Crank Ignition 1 Voltage	(58) 58	(58) 0.5	(58) V T / WH	(58) 23 9	(58) III	(58) —
(59) 59	(59) 0.35	(59) G Y / VT	(59) 80 22	(59) I	(59) —	(59) Police Roof Lamp Control	(59) 59	(59) 0.5	(59) G Y / VT	(59) 80 22	(59) III	(59) —
60	—	—	—	—	—	Not Occupied	60	—	—	—	—	—

Pin	Size	Color	Circuit	Terminal Type ID	Option	Function	Pin	Size	Color	Circuit	Terminal Type ID	Option
(61) 61	(61) 0.5	(61) BU / WH	(61) 88 99	(61) I	(61) —	(61) Police Microphone Data Signal	(61) 61	(61) 0.5	(61) BU / WH	(61) 88 99	(61) III	(61) —
(62) 62	(62) 0.75	(62) VT / YE	(62) 88 98	(62) I	(62) —	(62) Police Relay 4 Control	(62) 62	(62) 0.75	(62) VT / YE	(62) 88 98	(62) III	(62) —
(63) 63	(63) 0.5	(63) OG / VT	(63) 30 21	(63) I	(63) —	(63) Steering Wheel Air Bag Stage 1 High Control	(63) 63	(63) 0.5	(63) OG / VT	(63) 30 21	(63) III	(63) —
(64) 64	(64) 0.5	(64) BN / OG	(64) 30 20	(64) I	(64) —	(64) Steering Wheel Air Bag Stage 1 Low Control	(64) 64	(64) 0.5	(64) BN / OG	(64) 30 20	(64) III	(64) —
(65) 65	(65) 0.5	(65) OG / GN	(65) 30 23	(65) I	(65) —	(65) Steering Wheel Air Bag Stage 2 High Control	(65) 65	(65) 0.5	(65) OG / GN	(65) 30 23	(65) III	(65) —
(66) 66	(66) 0.5	(66) WH / OG	(66) 30 22	(66) I	(66) —	(66) Steering Wheel Air Bag Stage 2 Low Control	(66) 66	(66) 0.5	(66) WH / OG	(66) 30 22	(66) III	(66) —
(67) 67	(67) 0.5	(67) BU	(67) 20 1	(67) I	(67) —	(67) Left Front Speaker 1 [+] Control (67) Left Front Speaker 1 [+] Control	(67) 67	(67) 0.75 (67) 0.5	(67) BU (67) BU	(67) 20 1 (67) 20 1	(67) III (67) III	(67) UQF (67) UQH
(68) 68	(68) 0.5	(68) OG / WH	(68) 30 24	(68) I	(68) —	(68) Passenger Instrument Panel Air Bag Stage 1 Low Control	(68) 68	(68) 0.5	(68) OG / WH	(68) 30 24	(68) III	(68) —
69	—	—	—	—	—	Not Occupied	69	—	—	—	—	—
(70) 70	(70) 0.75	(70) BU / YE	(70) 88 95	(70) I	(70) —	(70) Police Relay 1 Control	(70) 70	(70) 0.75	(70) BU / YE	(70) 88 95	(70) III	(70) —
(71) 71	(71) 0.35	(71) WH	(71) 41 00	(71) I	(71) —	(71) AUTOSAR CAN Bus [-] 4 Serial Data	(71) 71	(71) 0.35	(71) WH	(71) 41 00	(71) III	(71) —
(72) 72	(72) 0.35	(72) BU / VT	(72) 41 01	(72) I	(72) —	(72) AUTOSAR CAN Bus [+] 4 Serial Data	(72) 72	(72) 0.35	(72) BU / VT	(72) 41 01	(72) III	(72) —
73	—	—	—	—	—	Not Occupied	73	—	—	—	—	—
(74) 74	(74) 0.35	(74) GN / BU	(74) 27 33	(74) I	(74) —	(74) Brake System Control Module LIN Bus 2	(74) 74	(74) 0.75	(74) GN / BU	(74) 27 33	(74) III	(74) —
(75) 75	(75) 0.75	(75) RD / GY	(75) 89 12	(75) I	(75) —	(75) Police Select Control 2	(75) 75	(75) 0.75	(75) RD / GY	(75) 89 12	(75) III	(75) —
(76) 76	(76) 0.75	(76) RD / WH	(76) 89 13	(76) I	(76) —	(76) Police Select Control 3	(76) 76	(76) 0.75	(76) RD / WH	(76) 89 13	(76) III	(76) —

X214 Instrument Panel Wiring Harness to Body Wiring Harness

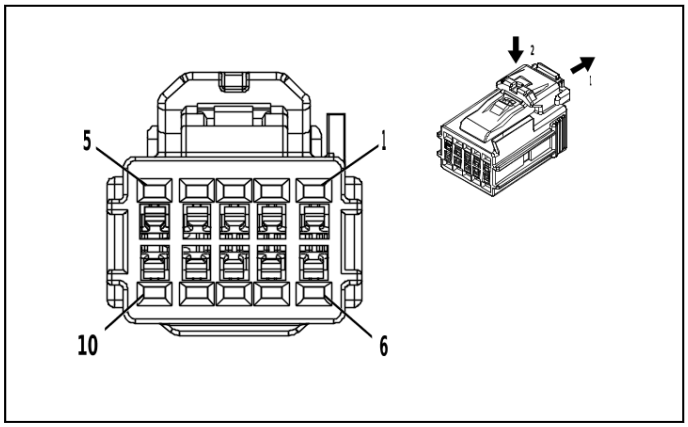

4254030

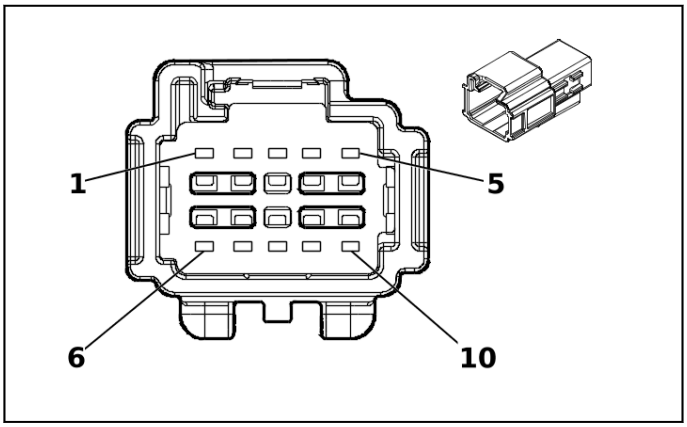

5355759

Connector Part Information
- Harness Type: Instrument Panel Wiring Harness
- OEM Connector: 6098-9004
- Service Connector: 13532428
- Description: 10-Way F 1.2 Series(BK)

Connector Part Information
- Harness Type: Body Wiring Harness
- OEM Connector: 6098-9079
- Service Connector: 13530136
- Description: 10-Way M 1.2 MCON Series(BK)

Terminal Part Information

Terminal Type ID	Terminated Lead	Diagnostic Test Probe	Terminal Removal Tool
I	Service by Cable	J-35616-12 (BU)	J-38125-215A
II	Service by Cable	J-35616-13 (BU)	J-38125-215A

X214 Instrument Panel Wiring Harness to Body Wiring Harness

Pin	Size	Color	Circuit	Terminal Type ID	Option	Function	Pin	Size	Color	Circuit	Terminal Type ID	Option
(1) 1	(1) 0.35	(1) VT / WH	(1) 7213	(1) I	(1) —	(1) Ethernet Bus 5 [+]	(1) 1	(1) 0.35	(1) VT / WH	(1) 7213	(1) II	(1) —
(2) 2	(2) 0.35	(2) VT	(2) 7212	(2) I	(2) —	(2) Ethernet Bus 5 [-]	(2) 2	(2) 0.35	(2) VT	(2) 7212	(2) II	(2) —
3	—	—	—	—	—	Not Occupied	3	—	—	—	—	—
(4) 4	(4) 0.35	(4) BN	(4) 7208	(4) I	(4) —	(4) Ethernet Bus 3 [-]	(4) 4	(4) 0.35	(4) BN	(4) 7208	(4) II	(4) —
(5) 5	(5) 0.35	(5) BN / WH	(5) 7209	(5) I	(5) —	(5) Ethernet Bus 3 [+]	(5) 5	(5) 0.35	(5) BN / WH	(5) 7209	(5) II	(5) —
6 - 10	—	—	—	—	—	Not Occupied	6 - 10	—	—	—	—	—

X215 Instrument Panel Wiring Harness to Instrument Panel Wiring Harness (5W4 / 9C1)

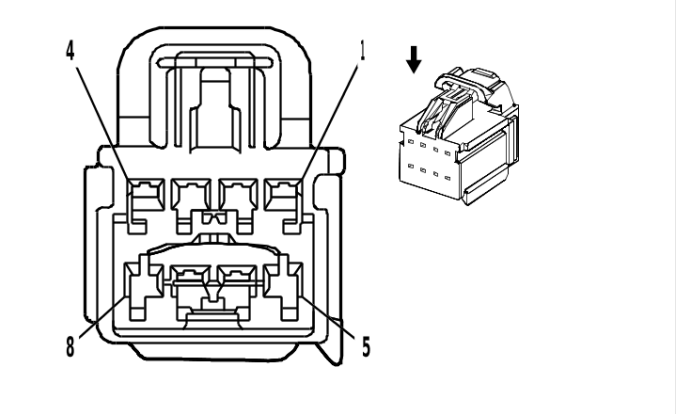

1849808

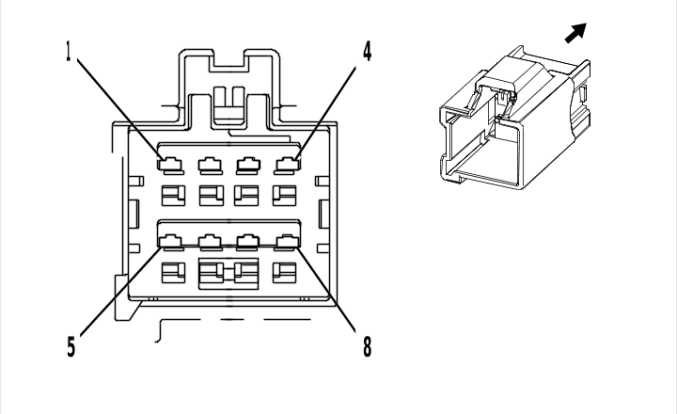

1849807

Connector Part Information
- Harness Type: Instrument Panel Wiring Harness
- OEM Connector: 7283-3441-40
- Service Connector: 19153166
- Description: 8-Way F 1.5 Kaizen Series(L-GY)

Connector Part Information
- Harness Type: Instrument Panel Wiring Harness
- OEM Connector: 7282-3441-40
- Service Connector: 19153162
- Description: 8-Way M 1.5 Kaizen Series(L-GY)

Terminal Part Information

Terminal Type ID	Terminated Lead	Diagnostic Test Probe	Terminal Removal Tool
I	Not required	J-35616-14 (GN)	No Tool Required
II	Not required	J-35616-3 (GY)	No Tool Required

X215 Instrument Panel Wiring Harness to Instrument Panel Wiring Harness (5W4 / 9C1)

Pin	Size	Color	Circuit	Terminal Type ID	Option	Function	Pin	Size	Color	Circuit	Terminal Type ID	Option
(1) 1	(1) 0.5	(1) BU	(1) 201	(1) I	(1) —	(1) Left Front Speaker 1 [+] Control	(1) 1	(1) 0.5	(1) BU	(1) 201	(1) II	(1) —
(2) 2	(2) 0.5	(2) YE	(2) 200	(2) I	(2) —	(2) Right Front Speaker 1 [+] Control	(2) 2	(2) 0.5	(2) YE	(2) 200	(2) II	(2) —
(3) 3	(3) 0.75	(3) GN	(3) 199	(3) I	(3) —	(3) Left Rear Speaker [+] Control	(3) 3	(3) 0.75	(3) GN	(3) 199	(3) II	(3) —
(4) 4	(4) 0.75	(4) WH	(4) 46	(4) I	(4) —	(4) Right Rear Speaker [+] Control	(4) 4	(4) 0.75	(4) WH	(4) 46	(4) II	(4) —
(5) 5	(5) 0.5	(5) BN / BU	(5) 118	(5) I	(5) —	(5) Left Front Speaker [-] Control 1	(5) 5	(5) 0.5	(5) BN / BU	(5) 118	(5) II	(5) —
(6) 6	(6) 0.5	(6) YE / BK	(6) 117	(6) I	(6) —	(6) Right Front Speaker [-] Control 1	(6) 6	(6) 0.5	(6) YE / BK	(6) 117	(6) II	(6) —
(7) 7	(7) 0.75	(7) GN / BK	(7) 116	(7) I	(7) —	(7) Left Rear Speaker [-] Control	(7) 7	(7) 0.75	(7) GN / BK	(7) 116	(7) II	(7) —
(8) 8	(8) 0.75	(8) BU / BK	(8) 115	(8) I	(8) —	(8) Right Rear Speaker [-] Control	(8) 8	(8) 0.75	(8) BU / BK	(8) 115	(8) II	(8) —

X216 Instrument Panel Wiring Harness to Body Wiring Harness

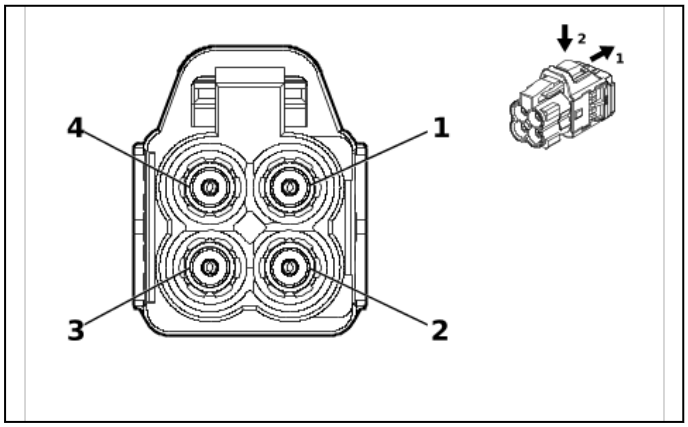

6002487

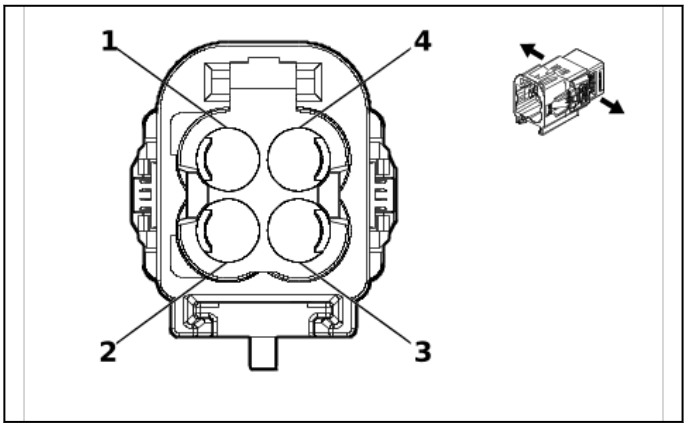

6002390

Connector Part Information

- Harness Type: Instrument Panel Wiring Harness COAX
- OEM Connector: 13544823
- Service Connector: Service by Cable Assembly — See Part Catalog
- Description: 4-Way F Mini Coax Type(GN)

Connector Part Information

- Harness Type: Body Wiring Harness COAX
- OEM Connector: 13520459
- Service Connector: Service by Cable Assembly — See Part Catalog
- Description: 4-Way M Mini Coax Type(GN)

Terminal Part Information

Terminal Type ID	Terminated Lead	Diagnostic Test Probe	Terminal Removal Tool
I	Not required	No Tool Required	No Tool Required

X216 Instrument Panel Wiring Harness to Body Wiring Harness

Pin	Size	Color	Circuit	Terminal Type ID	Option	Function	Pin	Size	Color	Circuit	Terminal Type ID	Option
(1) 1	(1) 0.4	(1) Coax Cable	(1) 4722	(1) I	(1) —	(1) Frontview Camera LVDS (Low Voltage Differential Signaling) Coaxial Signal	(1) 1	(1) 0.4	(1) Coax Cable	(1) 4722	(1) II	(1) —
(2) 2	(2) 0.4	(2) Coax Cable	(2) 7886	(2) I	(2) —	(2) Trailer 2 Rear Vision Camera LVDS (Low Voltage Differential Signaling) Coaxial Signal	(2) 2	(2) 0.4	(2) Coax Cable	(2) 7886	(2) II	(2) —

Pin	Size	Color	Circuit	Terminal Type ID	Option	Function	Pin	Size	Color	Circuit	Terminal Type ID	Option
(3) 3	(3) 0.4	(3) Coax Cable	(3) 2421	(3) I	(3) —	(3) Trailer Rear Vision Camera LVDS (Low Voltage Differential Signaling) Coaxial Signal	(3) 3	(3) 0.4	(3) Coax Cable	(3) 2421	(3) II	(3) —
(4) 4	(4) 0.4	(4) Coax Cable	(4) 4723	(4) I	(4) —	(4) Video Processing Module LVDS (Low Voltage Differential Signaling) Coaxial Signal	(4) 4	(4) 0.4	(4) Coax Cable	(4) 4723	(4) II	(4) —

X217 Instrument Panel Wiring Harness to Body Wiring Harness

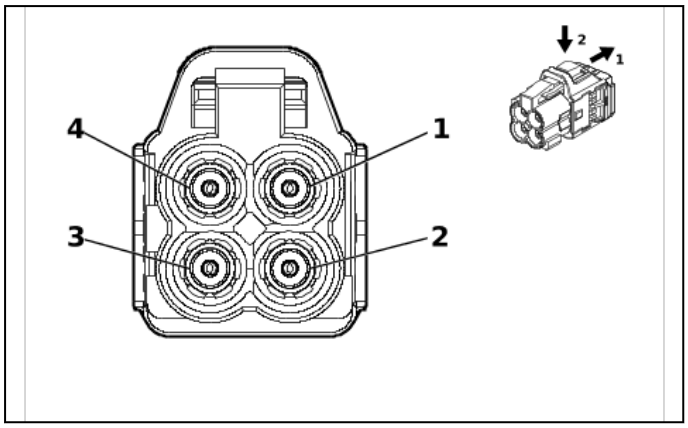

5925514

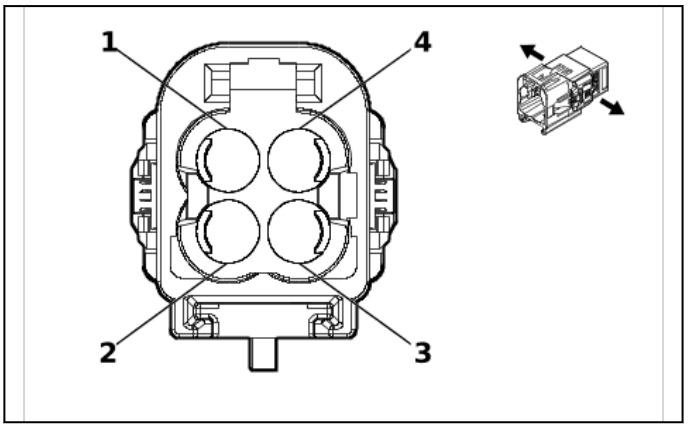

6186622

Connector Part Information
- Harness Type: Instrument Panel Wiring Harness COAX
- OEM Connector: 13544822
- Service Connector: Service by Cable Assembly — See Part Catalog
- Description: 4-Way F Mini Coax Type(VT)

Connector Part Information
- Harness Type: Body Wiring Harness COAX
- OEM Connector: AMZ040-C00-D
- Service Connector: Service by Cable Assembly — See Part Catalog
- Description: 4-Way M Mini Coax Type(VT)

Terminal Part Information

Terminal Type ID	Terminated Lead	Diagnostic Test Probe	Terminal Removal Tool
I	Not required	No Tool Required	No Tool Required

X217 Instrument Panel Wiring Harness to Body Wiring Harness

Pin	Size	Color	Circuit	Terminal Type ID	Option	Function	Pin	Size	Color	Circuit	Terminal Type ID	Option
(1) 1	(1) 0.5 (1) 0.4	(1) Coax Cable (1) Coax Cable	(1) 4726 (1) 4721	(1) I (1) I	(1) UKL (1) - UKL	(1) Driver Monitoring System Camera LVDS (Low Voltage Differential Signaling) Coaxial Signal (1) Rearview Camera LVDS (Low Voltage Differential Signaling) Coaxial Signal	(1) 1	(1) 0.4 (1) 0.4	(1) Coax Cable (1) Coax Cable	(1) 4726 (1) 4721	(1) II (1) II	(1) UKL (1) - UKL
(2) 2	(2) 0.4	(2) Coax Cable	(2) 4725	(2) I	(2) —	(2) Left Sideview Camera LVDS (Low Voltage Differential Signaling) Coaxial Signal	(2) 2	(2) 0.4	(2) Coax Cable	(2) 4725	(2) II	(2) —
(3) 3	(3) 0.4	(3) Coax Cable	(3) 4724	(3) I	(3) —	(3) Right Sideview Camera LVDS (Low Voltage Differential Signaling) Coaxial Signal	(3) 3	(3) 0.4	(3) Coax Cable	(3) 4724	(3) II	(3) —
4	—	—	—	—	—	Not Occupied	4	—	—	—	—	—

X225A Front Floor Console Wiring Harness to Body Wiring Harness

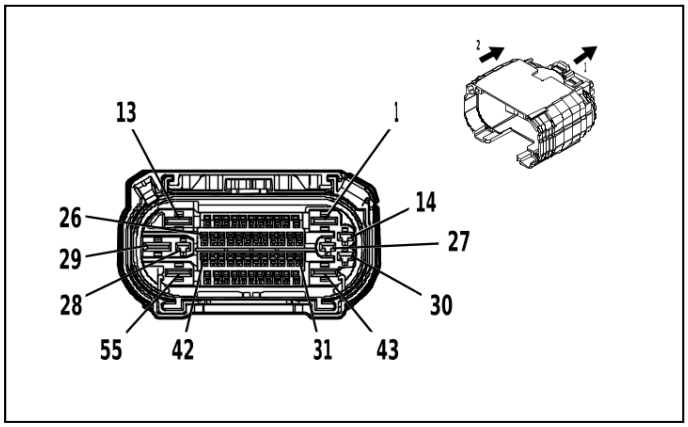

4992168

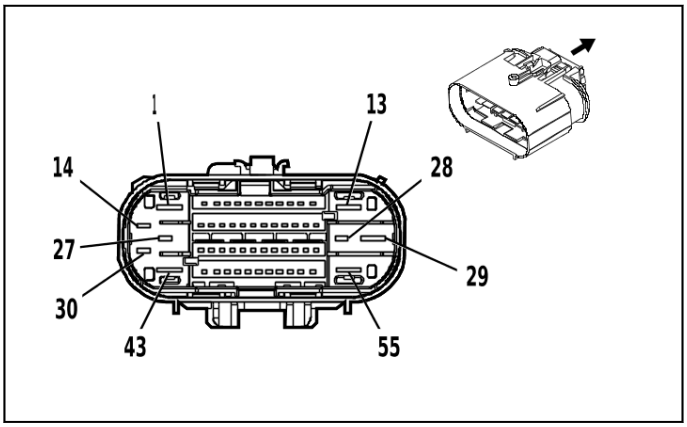

4993301

Connector Part Information
- Harness Type: Front Floor Console Wiring Harness
- OEM Connector: 35016652
- Service Connector: Service by Harness - See Part Catalog
- Description: 55-Way F 1.2 OCS, 2.8, 6.3 CTS Series, Sealed(BK)

Connector Part Information
- Harness Type: Body Wiring Harness
- OEM Connector: 35205173
- Service Connector: 84727364
- Description: 55-Way M 1.2 OCS, 2.8, 6.3 CTS Series, Sealed(BK)

Terminal Part Information

Terminal Type ID	Terminated Lead	Diagnostic Test Probe	Terminal Removal Tool
I	Not required	J-35616-12 (BU)	No Tool Required
II	Not required	J-35616-16 (L-GN)	No Tool Required
III	Not required	J-35616-35 (VT)	No Tool Required
IV	Not required	J-35616-42 (RD)	No Tool Required
V	84847992	J-35616-32 (OG)	J-38125-36
VI	84867140	J-35616-13 (BU)	J-38125-215A
VII	84867141	J-35616-13 (BU)	J-38125-215A
VIII	84992391	J-35616-5 (PU)	J-38125-36

X225A Front Floor Console Wiring Harness to Body Wiring Harness

Pin	Size	Color	Circuit	Terminal Type ID	Option	Function	Pin	Size	Color	Circuit	Terminal Type ID	Option
(1) 1	(1) 0.5	(1) BK / WH	(1) 1351	(1) IV	(1) —	(1) Signal Ground	(1) 1	(1) 0.5	(1) BK / WH	(1) 1351	(1) V	(1) —
(2) 2	(2) 0.75	(2) BK / WH	(2) 1451	(2) II	(2) —	(2) Signal Ground	(2) 2	(2) 0.75	(2) BK / WH	(2) 1451	(2) VI	(2) —
(3) 3	(3) 0.5	(3) VT / RD	(3) 4049	(3) II	(3) —	(3) AC Power Outlet Sensor High Reference	(3) 3	(3) 0.5	(3) VT / RD	(3) 4049	(3) VI	(3) —
(4) 4	(4) 0.5 (4) 0.75	(4) RD / VT (4) RD / VT	(4) 6340 (4) 6340	(4) II (4) II	(4) ((BOY / BOR) - K7A) (4) (Z88 / X88) & K7A - BOY - BOR	(4) Battery Positive Voltage (4) Battery Positive Voltage	(4) 4	(4) 0.5	(4) RD / VT	(4) 6340	(4) VI	(4) —
5 - 6	—	—	—	—	—	Not Occupied	5 - 6	—	—	—	—	—

Pin	Size	Color	Circuit	Terminal Type ID	Option	Function	Pin	Size	Color	Circuit	Terminal Type ID	Option
(7) 7	(7) 0.5 (7) 0.75	(7) RD / WH (7) RD	(7) 7240 (7) 7240	(7) II (7) II	(7) ((BOY / BOR) - K7A) (7) (Z88 / X88) & K7A - BOY - BOR	(7) Battery Positive Voltage (7) Battery Positive Voltage	(7) 7	(7) 0.35	(7) RD / WH	(7) 7240	(7) VI	(7) —
8 - 13	—	—	—	—	—	Not Occupied	8 - 13	—	—	—	—	—
(14) 14	(14) 0.5	(14) VT	(14) 4701	(14) III	(14) —	(14) Retained Accessory Power Control	(14) 14	(14) 0.5	(14) VT	(14) 4701	(14) VIII	(14) —
(15) 15	(15) 0.5	(15) GN / BK	(15) 2211	(15) II	(15) —	(15) Rear Blower Motor Speed Control	(15) 15	(15) 0.5	(15) GN / BK	(15) 2211	(15) VI	(15) —
16 - 19	—	—	—	—	—	Not Occupied	16 - 19	—	—	—	—	—
(20) 20	(20) 0.35	(20) GN / BK	(20) 2738	(20) I	(20) —	(20) Near Field Communication Module LIN Bus 1	(20) 20	(20) 0.35	(20) GN / BK	(20) 2738	(20) VI	(20) —
(21) 21	(21) 0.5	(21) WH / YE	(21) 11325	(21) II	(21) —	(21) Virtual Key Private CAN Bus [-] Serial Data	(21) 21	(21) 0.5	(21) WH / YE	(21) 11325	(21) VI	(21) —
(22) 22	(22) 0.5	(22) BU / BN	(22) 11326	(22) II	(22) —	(22) Virtual Key Private CAN Bus [+] Serial Data	(22) 22	(22) 0.5	(22) BU / BN	(22) 11326	(22) VI	(22) —
23 - 26	—	—	—	—	—	Not Occupied	23 - 26	—	—	—	—	—
(27) 27	(27) 0.5	(27) RD / BN	(27) 7540	(27) III	(27) —	(27) Battery Positive Voltage	(27) 27	(27) 0.5	(27) RD / BN	(27) 7540	(27) VIII	(27) —
(28) 28	(28) 0.75 (28) 1	(28) RD / VT (28) RD / VT	(28) 8640 (28) 8640	(28) III (28) III	(28) K7D (28) UW9 - K7D	(28) Battery Positive Voltage (28) Battery Positive Voltage	(28) 28	(28) 1	(28) RD / VT	(28) 8640	(28) VIII	(28) —
29 - 32	—	—	—	—	—	Not Occupied	29 - 32	—	—	—	—	—
(33) 33	(33) —	(33) —	(33) —	(33) —	(33) —	(33) Immobilizer Antenna Signal [+]	(33) 33	(33) 0.5	(33) BN / BK	(33) 4996	(33) VI	(33) —
(34) 34	(34) —	(34) —	(34) —	(34) —	(34) —	(34) Immobilizer Antenna Low Signal	(34) 34	(34) 0.5	(34) WH / GY	(34) 4997	(34) VI	(34) —
(35) 35	(35) 0.75	(35) BU / BN	(35) 6807	(35) II	(35) —	(35) DC/AC Inverter Control	(35) 35	(35) 0.75	(35) BU / BN	(35) 6807	(35) VI	(35) —
36 - 37	—	—	—	—	—	Not Occupied	36 - 37	—	—	—	—	—

Pin	Size	Color	Circuit	Terminal Type ID	Option	Function	Pin	Size	Color	Circuit	Terminal Type ID	Option
(38) 38	(38) 0.35 (38) 0.5	(38) BU / YE (38) BU / YE	(38) 49 84 (38) 49 84	(38) I (38) II	(38) K7D (38) UW9 - K7D	(38) AUTOSAR CAN Bus [-] 5 Serial Data (38) AUTOSAR CAN Bus [-] 5 Serial Data	(38) 38	(38) 0.5	(38) BU / YE	(38) 49 84	(38) VI	(38) —
(39) 39	(39) 0.35 (39) 0.5	(39) BU / WH (39) BU / WH	(39) 49 85 (39) 49 85	(39) I (39) II	(39) K7D (39) UW9 - K7D	(39) AUTOSAR CAN Bus [+] 5 Serial Data (39) AUTOSAR CAN Bus [+] 5 Serial Data	(39) 39	(39) 0.5	(39) BU / WH	(39) 49 85	(39) VI	(39) —
(40) 40	(40) 0.5	(40) YE	(40) 68 17	(40) II	(40) —	(40) LED Backlight Dimming Control 1	(40) 40	(40) 0.5	(40) YE	(40) 68 17	(40) VI	(40) —
(41) 41	(41) 0.75	(41) BK	(41) 10 117	(41) II	(41) —	(41) AC Outlet Phase A Control	(41) 41	(41) 0.75	(41) BK	(41) 10 117	(41) VI	(41) —
(42) 42	(42) 0.75	(42) RD	(42) 10 118	(42) II	(42) —	(42) AC Outlet Phase B Control	(42) 42	(42) 0.75	(42) RD	(42) 10 118	(42) VI	(42) —
43	—	—	—	—	—	Not Occupied	43	—	—	—	—	—
(44) 44	(44) 0.75	(44) GN / VT	(44) 47 86	(44) II	(44) (D07 / DCH)	(44) Dome/ Reading Lamp Enable Signal	(44) 44	(44) 0.75	(44) GN / VT	(44) 47 86	(44) VI	(44) (D07 / DCH)
(45) 45	(45) 0.35 (45) 0.5	(45) GN / VT (45) GN / VT	(45) 28 57 (45) 28 57	(45) I (45) II	(45) K7D (45) UW9 - K7D	(45) Body Control Module LIN Bus 11 (45) Body Control Module LIN Bus 11	(45) 45	(45) 0.35 (45) 0.5	(45) GN / VT (45) GN / VT	(45) 28 57 (45) 28 57	(45) VI (45) VI	(45) K7D (45) UW9 - K7D
(46) 46	(46) 0.5	(46) WH / YE	(46) 11 325	(46) II	(46) —	(46) Virtual Key Private CAN Bus [-] Serial Data	(46) 46	(46) 0.5	(46) WH / YE	(46) 11 325	(46) VI	(46) —
(47) 47	(47) 0.5	(47) BU / BN	(47) 11 326	(47) II	(47) —	(47) Virtual Key Private CAN Bus [+] Serial Data	(47) 47	(47) 0.5	(47) BU / BN	(47) 11 326	(47) VI	(47) —
48 - 49	—	—	—	—	—	Not Occupied	48 - 49	—	—	—	—	—
(50) 50	(50) 0.35 (50) 0.5	(50) BU / YE (50) BU / YE	(50) 49 84 (50) 49 84	(50) I (50) II	(50) K7D (50) UW9 - K7D	(50) AUTOSAR CAN Bus [-] 5 Serial Data (50) AUTOSAR CAN Bus [-] 5 Serial Data	(50) 50	(50) 0.35	(50) BU / YE	(50) 49 84	(50) VI	(50) —

Pin	Size	Color	Circuit	Terminal Type ID	Option	Function	Pin	Size	Color	Circuit	Terminal Type ID	Option
(51) 51	(51) 0.35 (51) 0.5	(51) B U / WH (51) B U / WH	(51) 49 85 (51) 49 85	(51) I (51) II	(51) K7D (51) UW9 - K7D	(51) AUTOSAR CAN Bus [+] 5 Serial Data (51) AUTOSAR CAN Bus [+] 5 Serial Data	(51) 51	(51) 0.35	(51) B U / WH	(51) 49 85	(51) VI	(51) —
52 - 53	—	—	—	—	—	Not Occupied	52 - 53	—	—	—	—	—
(54) 54	(54) 1	(54) B K / WH	(54) 10 116	(54) II	(54) —	(54) AC Outlet Low Reference	(54) 54	(54) 1	(54) B K / WH	(54) 10 116	(54) VII	(54) —
(55) 55	(55) 2	(55) B K	(55) 12 50	(55) IV	(55) —	(55) Ground	(55) 55	(55) 2	(55) B K	(55) 12 50	(55) V	(55) —

X225B Instrument Panel Wiring Harness to Front Floor Console Wiring Harness

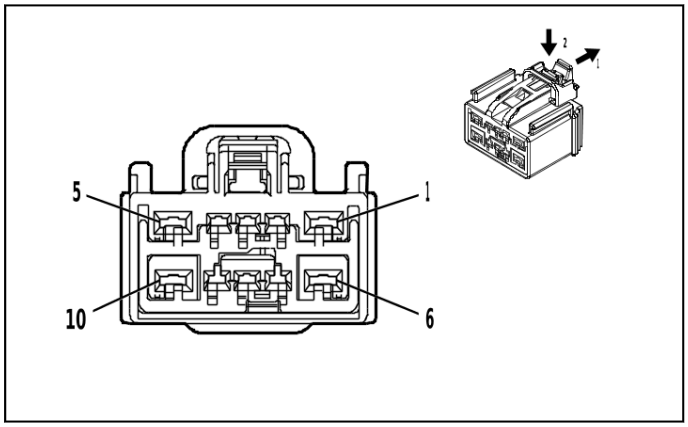

5020939

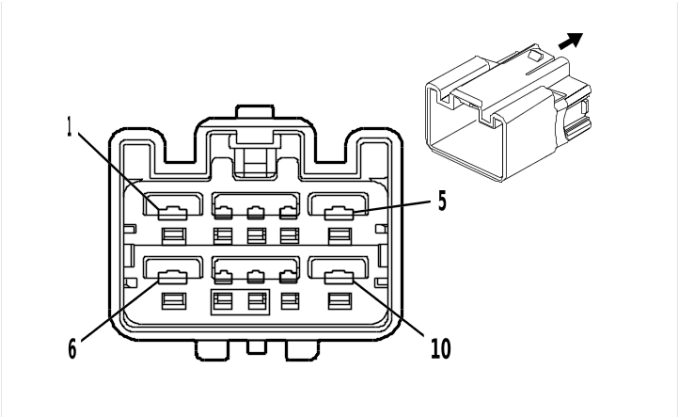

1851890

Connector Part Information
- Harness Type: Instrument Panel Wiring Harness
- OEM Connector: 7289-9153-40
- Service Connector: 13518747
- Description: 10-Way F 1.5, 2.8 Kaizen Series(L-GY)

Connector Part Information
- Harness Type: Front Floor Console Wiring Harness
- OEM Connector: 7282-6459-40
- Service Connector: Service by Harness - See Part Catalog
- Description: 10-Way M 1.5, 2.8 Kaizen Series(L-GY)

Terminal Part Information

Terminal Type ID	Terminated Lead	Diagnostic Test Probe	Terminal Removal Tool
I	19332534	J-35616-2A (GY)	J-38125-557
II	85544080	J-35616-4A (PU)	J-38125-11A
III	Not required	J-35616-3 (GY)	No Tool Required
IV	Not required	J-35616-5 (PU)	No Tool Required

X225B Instrument Panel Wiring Harness to Front Floor Console Wiring Harness

Pin	Size	Color	Circuit	Terminal Type ID	Option	Function	Pin	Size	Color	Circuit	Terminal Type ID	Option
1	—	—	—	—	—	Not Occupied	1	—	—	—	—	—
(2) 2	(2) 0.5	(2) RD / YE	(2) 2340	(2) I	(2) —	(2) Battery Positive Voltage	(2) 2	(2) 0.5	(2) RD / YE	(2) 2340	(2) III	(2) —
(3) 3	(3) 0.35	(3) BN / BK	(3) 4996	(3) I	(3) —	(3) Immobilizer Antenna Signal [+]	(3) 3	(3) 0.35	(3) BN / BK	(3) 4996	(3) III	(3) —
(4) 4	(4) 0.35	(4) WH / GY	(4) 4997	(4) I	(4) —	(4) Immobilizer Antenna Low Signal	(4) 4	(4) 0.35	(4) WH / GY	(4) 4997	(4) III	(4) —
(5) 5	(5) 0.35	(5) GN / YE	(5) 7066	(5) II	(5) —	(5) Entertainment Remote Enable Signal	(5) 5	(5) 0.5	(5) GN / YE	(5) 7066	(5) IV	(5) —
6 - 7	—	—	—	—	—	Not Occupied	6 - 7	—	—	—	—	—
(8) 8	(8) 0.35	(8) BN / BK	(8) 3552	(8) I	(8) —	(8) Interior Passive Entry Antenna 1 High Signal	(8) 8	(8) 0.35	(8) BN / BK	(8) 3552	(8) III	(8) —
(9) 9	(9) 0.35	(9) WH	(9) 3553	(9) I	(9) —	(9) Interior Passive Entry Antenna 1 Low Signal	(9) 9	(9) 0.35	(9) WH	(9) 3553	(9) III	(9) —
10	—	—	—	—	—	Not Occupied	10	—	—	—	—	—

X225C Front Floor Console Wiring Harness to Instrument Panel Wiring Harness

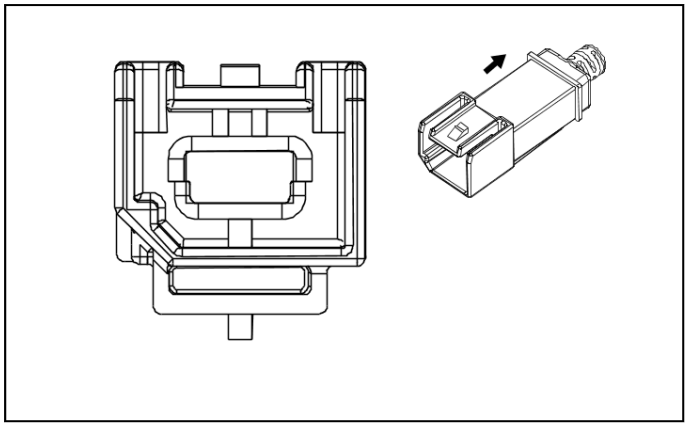

2830616

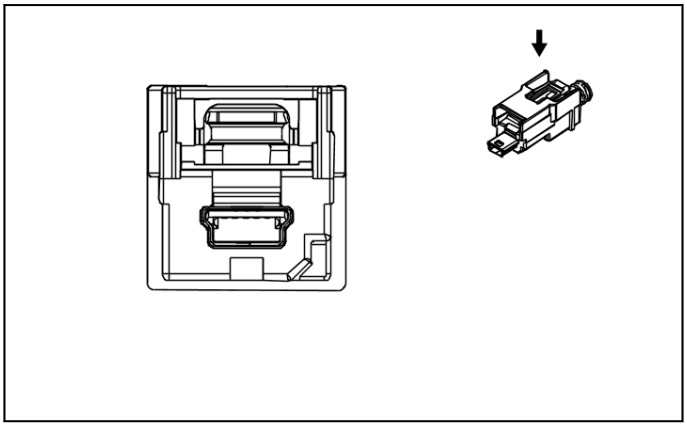

2807425

Connector Part Information
- Harness Type: Front Floor Console Wiring Harness USB
- OEM Connector: 111005-9014
- Service Connector: Service by Cable Assembly — See Part Catalog
- Description: 5-Way F 2.0 Mini-B USB Type(BK)

Connector Part Information
- Harness Type: Instrument Panel Wiring Harness USB
- OEM Connector: 13576672
- Service Connector: Service by Cable Assembly — See Part Catalog
- Description: 5-Way M 2.0 Mini-B USB Type(BK)

Terminal Part Information

Terminal Type ID	Terminated Lead	Diagnostic Test Probe	Terminal Removal Tool
I	Not required	No Tool Required	No Tool Required

X225C Front Floor Console Wiring Harness to Instrument Panel Wiring Harness

Pin	Size	Color	Circuit	Terminal Type ID	Option	Function	Pin	Size	Color	Circuit	Terminal Type ID	Option
—	—	USB	—	I	—	USB Serial Data	—	—	USB	—	I	—

X226 Front Floor Console Wiring Harness to Body Wiring Harness (UW9)

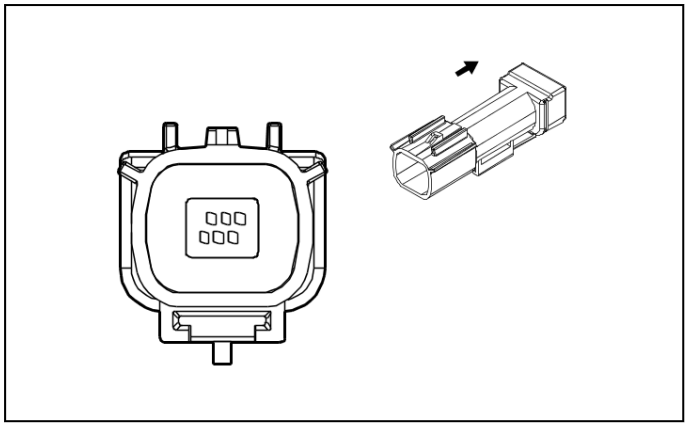

4477041

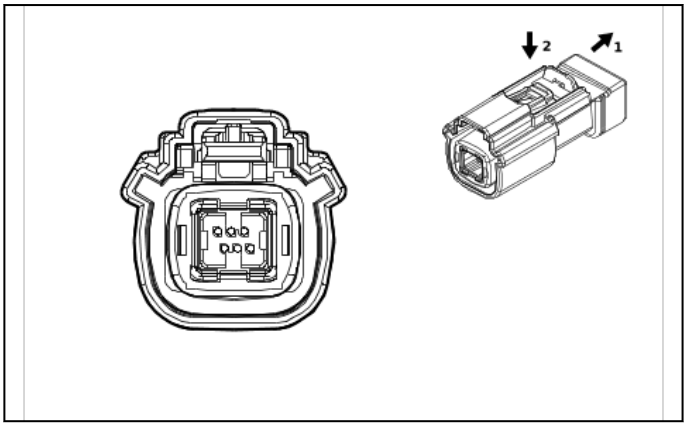

4477145

Connector Part Information
- Harness Type: Front Floor Console Wiring Harness
- OEM Connector: 111194-1018
- Service Connector: Service by Cable Assembly — See Part Catalog
- Description: 6-Way F HSAL-2 Series, Sealed(BK)

Connector Part Information
- Harness Type: Body Wiring Harness
- OEM Connector: 100048-1018
- Service Connector: Service by Cable Assembly — See Part Catalog
- Description: 6-Way M HSAL-2 Series, Sealed(BK)

Terminal Part Information

Terminal Type ID	Terminated Lead	Diagnostic Test Probe	Terminal Removal Tool
I	Not required	No Tool Required	No Tool Required

X226 Front Floor Console Wiring Harness to Body Wiring Harness (UW9)

Pin	Size	Color	Circuit	Terminal Type ID	Option	Function	Pin	Size	Color	Circuit	Terminal Type ID	Option
—	—	LVDS	—	I	—	Rear Seat Infotainment Auxiliary Audio/Video Jack LVDS (Low Voltage Differential Signaling) Low Reference	—	—	LVDS	—	I	—

X250 Instrument Panel Wiring Harness to Heater Wiring Harness

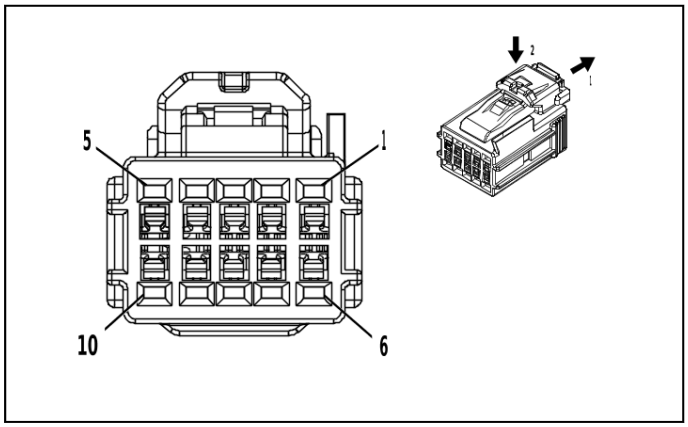

4254030

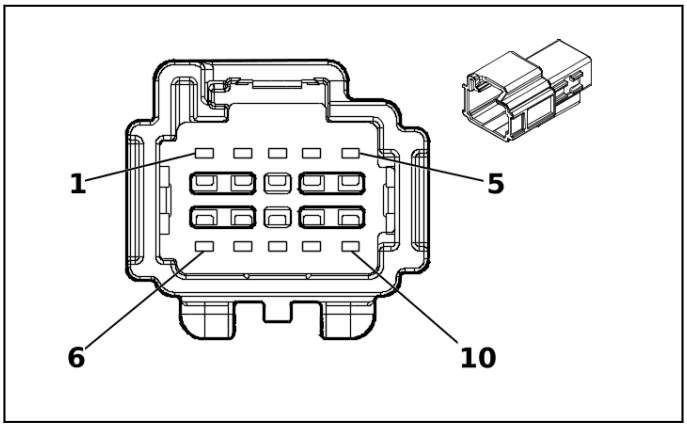

5355759

Connector Part Information
- Harness Type: Instrument Panel Wiring Harness
- OEM Connector: 6098-9004
- Service Connector: 13532428
- Description: 10-Way F 1.2 Series(BK)

Connector Part Information
- Harness Type: Heater Wiring Harness
- OEM Connector: 6098-9079
- Service Connector: Service by Harness - See Part Catalog
- Description: 10-Way M 1.2 MCON Series(BK)

Terminal Part Information

Terminal Type ID	Terminated Lead	Diagnostic Test Probe	Terminal Removal Tool
I	84962854	J-35616-12 (BU)	J-38125-215A
II	Not required	J-35616-17 (L-GN)	No Tool Required

X250 Instrument Panel Wiring Harness to Heater Wiring Harness

Pin	Size	Color	Circuit	Terminal Type ID	Option	Function	Pin	Size	Color	Circuit	Terminal Type ID	Option
1	—	—	—	—	—	Not Occupied	1	—	—	—	—	—
(2) 2	(2) 0.5	(2) BK	(2) 1050	(2) I	(2) —	(2) Ground	(2) 2	(2) 0.35	(2) BK	(2) 1050	(2) II	(2) —
3 - 4	—	—	—	—	—	Not Occupied	3 - 4	—	—	—	—	—
(5) 5	(5) 0.35	(5) GY	(5) 6137	(5) I	(5) —	(5) Air Conditioning Evaporator Temperature Sensor Signal	(5) 5	(5) 0.35	(5) BN	(5) 6137	(5) II	(5) —
(6) 6	(6) 0.35	(6) GN / VT	(6) 2852	(6) I	(6) —	(6) Body Control Module LIN Bus 6	(6) 6	(6) 0.35	(6) BU	(6) 2852	(6) II	(6) —
(7) 7	(7) 0.35	(7) BK / YE	(7) 407	(7) I	(7) —	(7) Sensor Low Reference	(7) 7	(7) 0.35	(7) BK / YE	(7) 407	(7) II	(7) —
(8) 8	(8) 0.35	(8) VT / WH	(8) 239	(8) I	(8) —	(8) Run/ Crank Ignition 1 Voltage	(8) 8	(8) 0.35	(8) BN / VT	(8) 239	(8) II	(8) —
(9) 9	(9) 0.35	(9) WH / YE	(9) 4634	(9) I	(9) —	(9) HVAC Remote Enable Signal	(9) 9	(9) 0.35	(9) RD	(9) 4634	(9) II	(9) —
10	—	—	—	—	—	Not Occupied	10	—	—	—	—	—

X251 Body Wiring Harness to Auxiliary Heater and Air Conditioning Wiring Harness

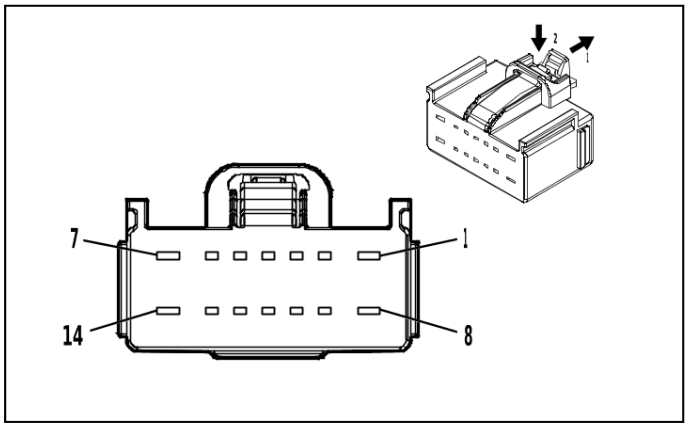

4934172

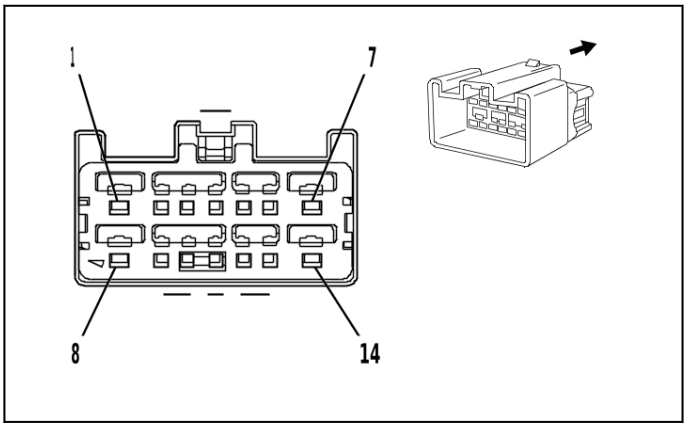

1283905

Connector Part Information

- Harness Type: Body Wiring Harness
- OEM Connector: 33366376
- Service Connector: 13513605
- Description: 14-Way F 1.5, 2.8 YESC Series(GY)

Connector Part Information

- Harness Type: Auxiliary Heater and Air Conditioning Wiring Harness
- OEM Connector: 7282-6447-40
- Service Connector: Service by Harness - See Part Catalog
- Description: 14-Way M 1.5, 2.8 YESC Series(L-GY)

Terminal Part Information

Terminal Type ID	Terminated Lead	Diagnostic Test Probe	Terminal Removal Tool
I	19332534	J-35616-2A (GY)	J-38125-557
II	85544080	J-35616-4A (PU)	J-38125-11A
III	Not required	J-35616-3 (GY)	No Tool Required
IV	Not required	J-35616-5 (PU)	No Tool Required

X251 Body Wiring Harness to Auxiliary Heater and Air Conditioning Wiring Harness

Pin	Size	Color	Circuit	Terminal Type ID	Option	Function	Pin	Size	Color	Circuit	Terminal Type ID	Option
(1) 1	(1) 3	(1) RD / GY	(1) 1740	(1) II	(1) —	(1) Battery Positive Voltage	(1) 1	(1) 3	(1) RD / YE	(1) 1740	(1) IV	(1) —
2	—	—	—	—	—	Not Occupied	2	—	—	—	—	—
(3) 3	(3) 0.35	(3) WH / YE	(3) 4634	(3) I	(3) —	(3) HVAC Remote Enable Signal	(3) 3	(3) 0.75	(3) RD / WH	(3) 4634	(3) III	(3) —
(4) 4	(4) 0.5	(4) BK	(4) 1450	(4) I	(4) —	(4) Ground	(4) 4	(4) 0.35	(4) BK / WH	(4) 1450	(4) III	(4) —
(5) 5	(5) 0.35	(5) GN / BN	(5) 2853	(5) I	(5) —	(5) Body Control Module LIN Bus 7	(5) 5	(5) 0.75	(5) GN / WH	(5) 2853	(5) III	(5) —
6 - 8	—	—	—	—	—	Not Occupied	6 - 8	—	—	—	—	—
(9) 9	(9) 0.5	(9) GN / BK	(9) 2211	(9) I	(9) —	(9) Rear Blower Motor Speed Control	(9) 9	(9) 0.35	(9) BN	(9) 2211	(9) III	(9) —

Pin	Size	Color	Circuit	Terminal Type ID	Option	Function	Pin	Size	Color	Circuit	Terminal Type ID	Option
10 - 13	—	—	—	—	—	Not Occupied	10 - 13	—	—	—	—	—
(14) 14	(14) 3	(14) B K	(14) 14 50	(14) II	(14) —	(14) Ground	(14) 14	(14) 3	(14) B K	(14) 14 50	(14) IV	(14) —

X251L Heater Wiring Harness to Body Wiring Harness (C3A)

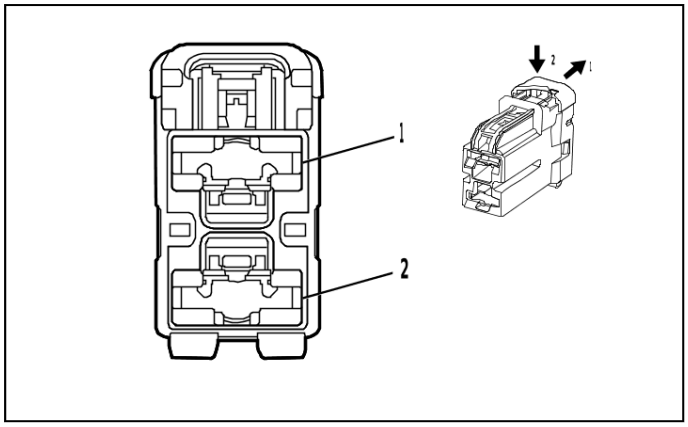

2453116

Connector Part Information
- Harness Type: Heater Wiring Harness
- OEM Connector: Not Available
- Service Connector: Service by Harness - See Part Catalog
- Description: 2-Way F

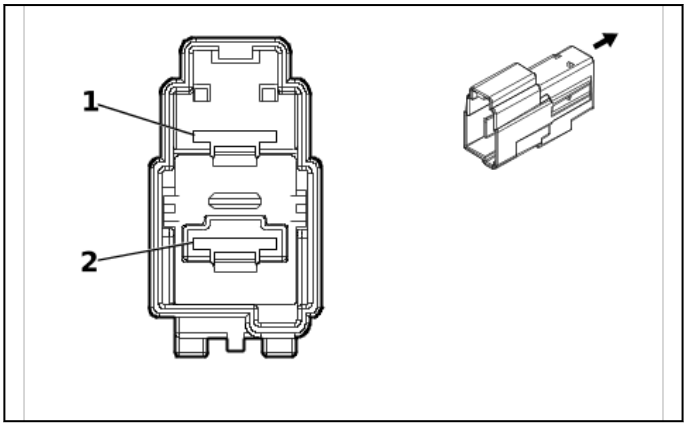

5375411

Connector Part Information
- Harness Type: Body Wiring Harness
- OEM Connector: 35013203
- Service Connector: Service by Harness - See Part Catalog
- Description: 2-Way M 9.5 Y-Type Series(BK)

Terminal Part Information

Terminal Type ID	Terminated Lead	Diagnostic Test Probe	Terminal Removal Tool
I	Not required	No Tool Required	No Tool Required
II	Not required	No Tool Required	No Tool Required

X251L Heater Wiring Harness to Body Wiring Harness (C3A)

Pin	Size	Color	Circuit	Terminal Type ID	Option	Function	Pin	Size	Color	Circuit	Terminal Type ID	Option
1	—	—	—	—	—	Not Occupied	1	—	—	—	—	—
(2) 2	(2) 1 6	(2) RD / GY	(2) 642	(2) I	(2) —	(2) Battery Positive Volt-age	(2) 2	(2) 1 6	(2) RD / GY	(2) 642	(2) II	(2) —

X251P Instrument Panel Wiring Harness to Body Wiring Harness (5W4 / 9C1)

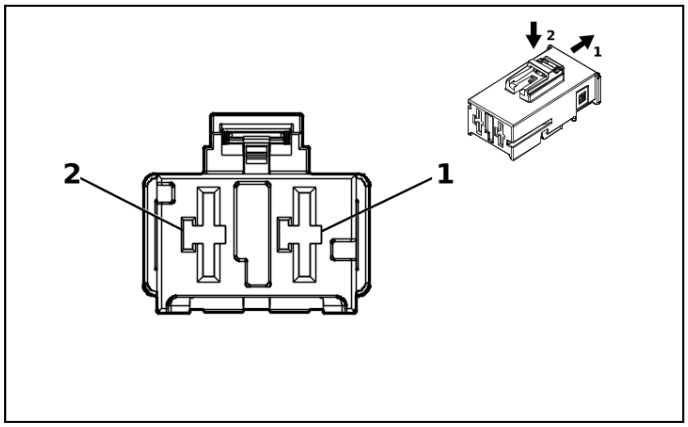

5187955

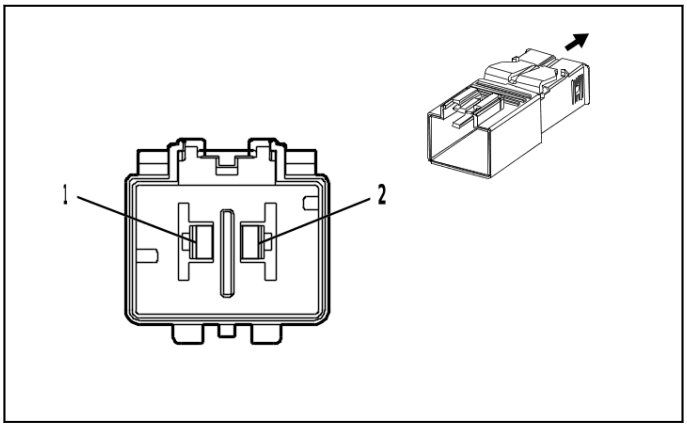

4891120

Connector Part Information
- Harness Type: Instrument Panel Wiring Harness
- OEM Connector: 2317368-1
- Service Connector: Service by Harness - See Part Catalog
- Description: 2-Way F 9.5 MCON-LL Series(BK)

Connector Part Information
- Harness Type: Body Wiring Harness
- OEM Connector: 2317373-1
- Service Connector: 85675535
- Description: 2-Way M 9.5 MCON-LL Series(BK)

Terminal Part Information

Terminal Type ID	Terminated Lead	Diagnostic Test Probe	Terminal Removal Tool
I	Not required	J-35616-22 (RD)	No Tool Required
II	Not required	J-35616-21 (RD)	No Tool Required

X251P Instrument Panel Wiring Harness to Body Wiring Harness (5W4 / 9C1)

Pin	Size	Color	Circuit	Terminal Type ID	Option	Function	Pin	Size	Color	Circuit	Terminal Type ID	Option
(1) 1	(1) 5	(1) RD / GY	(1) 2742	(1) I	(1) —	(1) Battery Positive Voltage	(1) 1	(1) 6	(1) RD / GY	(1) 2742	(1) II	(1) —
2	—	—	—	—	—	Not Occupied	2	—	—	—	—	—

X252 Body Wiring Harness to Body Wiring Harness (5W4 / 9C1)

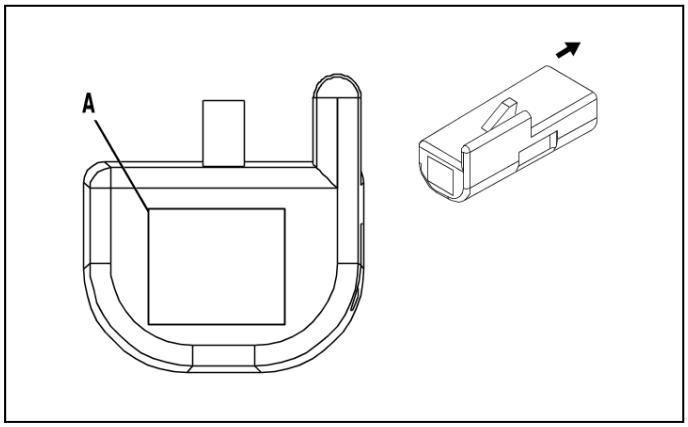

439818

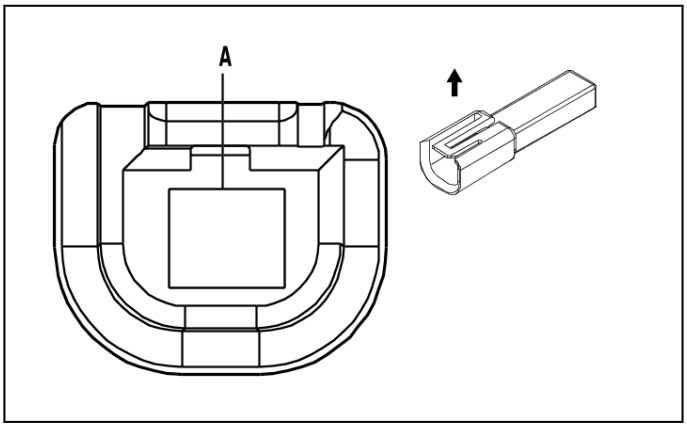

611495

Connector Part Information
- Harness Type: Body Wiring Harness
- OEM Connector: 12047682
- Service Connector: 12101850
- Description: 1-Way F 150 Metri-Pack Series(BK)

Connector Part Information
- Harness Type: Body Wiring Harness
- OEM Connector: 12047683
- Service Connector: 12101828
- Description: 1-Way M 150 Metri-Pack Series(BK)

Terminal Part Information

Terminal Type ID	Terminated Lead	Diagnostic Test Probe	Terminal Removal Tool
I	Not required	J-35616-14 (GN)	No Tool Required
II	Not required	J-35616-3 (GY)	No Tool Required

X252 Body Wiring Harness to Body Wiring Harness (5W4 / 9C1)

Pin	Size	Color	Circuit	Terminal Type ID	Option	Function	Pin	Size	Color	Circuit	Terminal Type ID	Option
A	0.5	BN / WH	28	I	—	Horn Relay Control	A	0.35	BN / WH	28	II	—

X300G Body Wiring Harness to Police Accessories Wiring Harness (5W4 / 9C1)

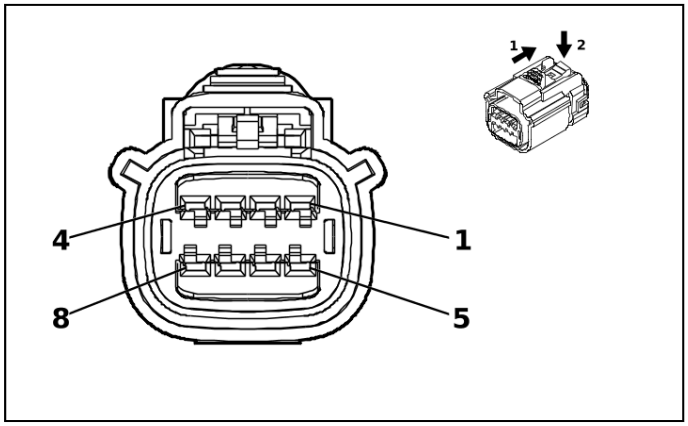

5253496

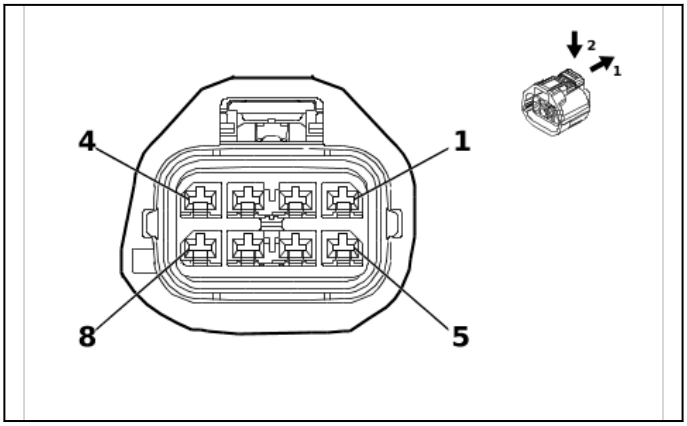

5881462

Connector Part Information
- Harness Type: Body Wiring Harness
- OEM Connector: 15514667
- Service Connector: Service by Harness - See Part Catalog
- Description: 8-Way F 1.5 OCS Series, Sealed(BK)

Connector Part Information
- Harness Type: Police Accessories Wiring Harness
- OEM Connector: Not Available
- Service Connector: Service by Harness - See Part Catalog
- Description: 8-Way M (BK)

Terminal Part Information

Terminal Type ID	Terminated Lead	Diagnostic Test Probe	Terminal Removal Tool
I	Not required	J-35616-14 (GN)	No Tool Required
II	Not required	J-35616-2A (GY)	No Tool Required
III	Not required	No Tool Required	No Tool Required

X300G Body Wiring Harness to Police Accessories Wiring Harness (5W4 / 9C1)

Pin	Size	Color	Circuit	Terminal Type ID	Option	Function	Pin	Size	Color	Circuit	Terminal Type ID	Option
(1) 1	(1) 0.75	(1) BN	(1) 8855	(1) II	(1) —	(1) Police Front Grille Light 1 Control	(1) 1	(1) 0.75	(1) BN	(1) 8855	(1) III	(1) —
(2) 2	(2) 0.75	(2) BN / BU	(2) 8856	(2) II	(2) —	(2) Police Front Grille Light 2 Control	(2) 2	(2) 0.75	(2) BN / BU	(2) 8856	(2) III	(2) —
(3) 3	(3) 0.75	(3) BK / BN	(3) 8857	(3) II	(3) —	(3) Police Front Grille Light Low Reference	(3) 3	(3) 0.75	(3) BK / BN	(3) 8857	(3) III	(3) —
(4) 4	(4) 0.75	(4) WH	(4) 8858	(4) II	(4) —	(4) Police Front Grille Light Syn-chronization Signal	(4) 4	(4) 0.75	(4) WH	(4) 8858	(4) III	(4) —
(5) 5	(5) 0.75	(5) BN / YE	(5) 8859	(5) II	(5) —	(5) Police Front Grille Light Steady Burn Control	(5) 5	(5) 0.75	(5) BN / YE	(5) 8859	(5) III	(5) —
(6) 6	(6) 0.75	(6) WH / BK	(6) 8860	(6) II	(6) —	(6) Police Front Grille Spare 1 Signal	(6) 6	(6) 0.75	(6) WH / BK	(6) 8860	(6) III	(6) —
(7) 7	(7) 1.5	(7) GN / WH	(7) 8861	(7) I	(7) —	(7) Police Front Grille Speaker [+] Control	(7) 7	(7) 1.5	(7) GN / WH	(7) 8861	(7) III	(7) —
(8) 8	(8) 1.5	(8) BU / WH	(8) 8862	(8) I	(8) —	(8) Police Front Grille Speaker [-] Control	(8) 8	(8) 1.5	(8) BU / WH	(8) 8862	(8) III	(8) —

X300L Body Wiring Harness to Police Accessories Wiring Harness (5W4 / 9C1)

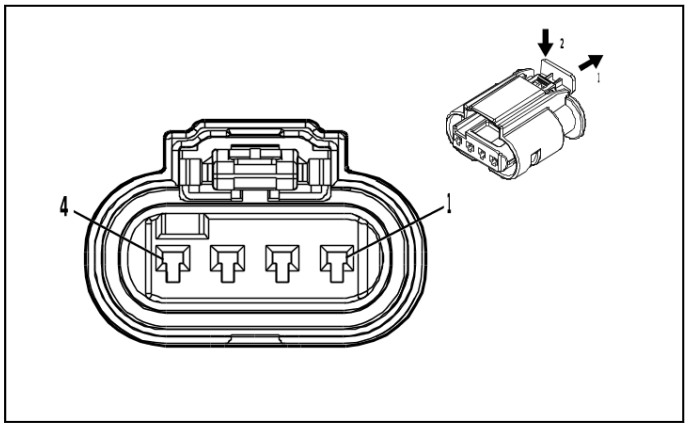

4994577

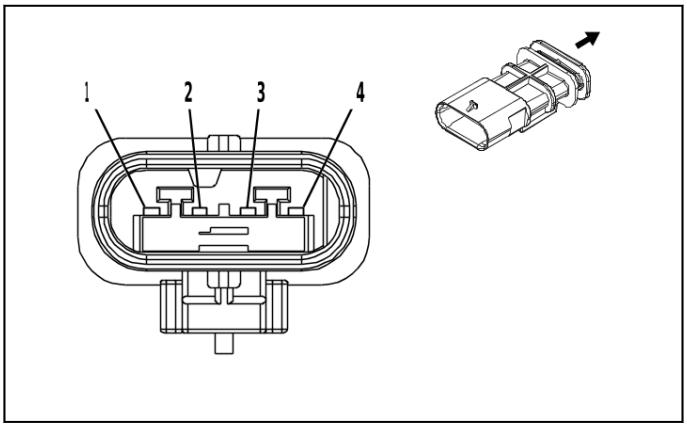

4214866

Connector Part Information
- Harness Type: Body Wiring Harness
- OEM Connector: 34900-4120
- Service Connector: 19371202
- Description: 4-Way F 1.2 MCON-CB Series, Sealed(BK)

Connector Part Information
- Harness Type: Police Accessories Wiring Harness
- OEM Connector: Not Available
- Service Connector: Service by Harness - See Part Catalog
- Description: 4-Way M (BK)

Terminal Part Information

Terminal Type ID	Terminated Lead	Diagnostic Test Probe	Terminal Removal Tool
I	Not required	J-35616-16 (L-GN)	No Tool Required
II	Not required	No Tool Required	No Tool Required

X300L Body Wiring Harness to Police Accessories Wiring Harness (5W4 / 9C1)

Pin	Size	Color	Circuit	Terminal Type ID	Option	Function	Pin	Size	Color	Circuit	Terminal Type ID	Option
(1) 1	(1) 0.75	(1) BU	(1) 8890	(1) I	(1) —	(1) Police Front Corner Light Control	(1) 1	(1) 0.75	(1) BU	(1) 8890	(1) II	(1) —
(2) 2	(2) 0.75	(2) BK	(2) 150	(2) I	(2) —	(2) Ground	(2) 2	(2) 0.75	(2) BK	(2) 150	(2) II	(2) —
(3) 3	(3) 0.75	(3) BU / WH	(3) 8891	(3) I	(3) —	(3) Police Corner Strobe Synchronization Signal	(3) 3	(3) 0.75	(3) BU / WH	(3) 8891	(3) II	(3) —
(4) 4	(4) 0.75	(4) VT	(4) 8893	(4) I	(4) —	(4) Police Front Corner Strobe Control	(4) 4	(4) 0.75	(4) VT	(4) 8893	(4) II	(4) —

X300R Body Wiring Harness to Police Accessories Wiring Harness (5W4 / 9C1)

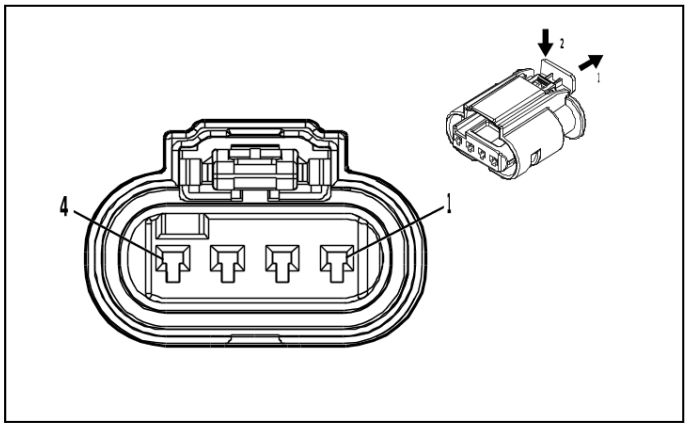

4994577

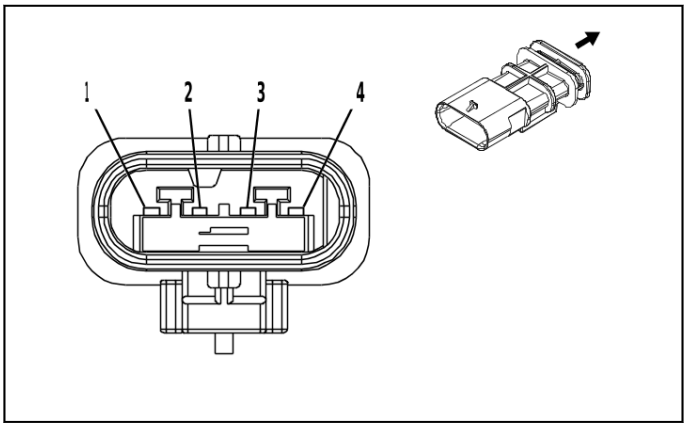

4214866

Connector Part Information
- Harness Type: Body Wiring Harness
- OEM Connector: 34900-4120
- Service Connector: 19371202
- Description: 4-Way F 1.2 MCON-CB Series, Sealed(BK)

Connector Part Information
- Harness Type: Police Accessories Wiring Harness
- OEM Connector: Not Available
- Service Connector: Service by Harness - See Part Catalog
- Description: 4-Way M (BK)

Terminal Part Information

Terminal Type ID	Terminated Lead	Diagnostic Test Probe	Terminal Removal Tool
I	Not required	J-35616-16 (L-GN)	No Tool Required
II	Not required	No Tool Required	No Tool Required

X300R Body Wiring Harness to Police Accessories Wiring Harness (5W4 / 9C1)

Pin	Size	Color	Circuit	Terminal Type ID	Option	Function	Pin	Size	Color	Circuit	Terminal Type ID	Option
(1) 1	(1) 0.75	(1) BU	(1) 8890	(1) I	(1) —	(1) Police Front Corner Light Control	(1) 1	(1) 0.75	(1) BU	(1) 8890	(1) II	(1) —
(2) 2	(2) 0.75	(2) BK	(2) 250	(2) I	(2) —	(2) Ground	(2) 2	(2) 0.75	(2) BK	(2) 250	(2) II	(2) —
(3) 3	(3) 0.75	(3) BU / WH	(3) 8891	(3) I	(3) —	(3) Police Corner Strobe Synchronization Signal	(3) 3	(3) 0.75	(3) BU / WH	(3) 8891	(3) II	(3) —
(4) 4	(4) 0.75	(4) VT	(4) 8893	(4) I	(4) —	(4) Police Front Corner Strobe Control	(4) 4	(4) 0.75	(4) VT	(4) 8893	(4) II	(4) —

X309 Body Wiring Harness to Body Wiring Harness

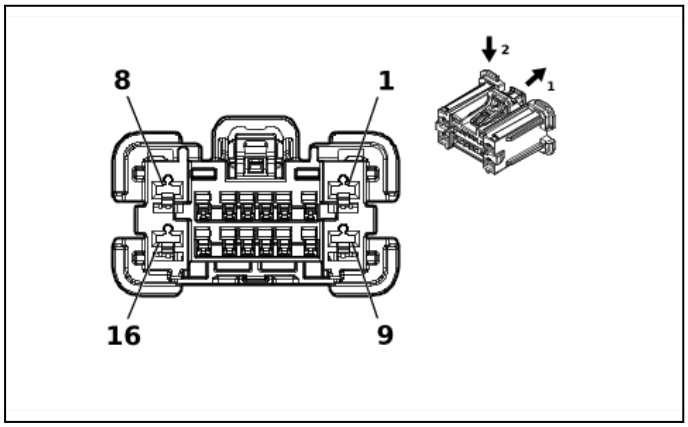

6049199

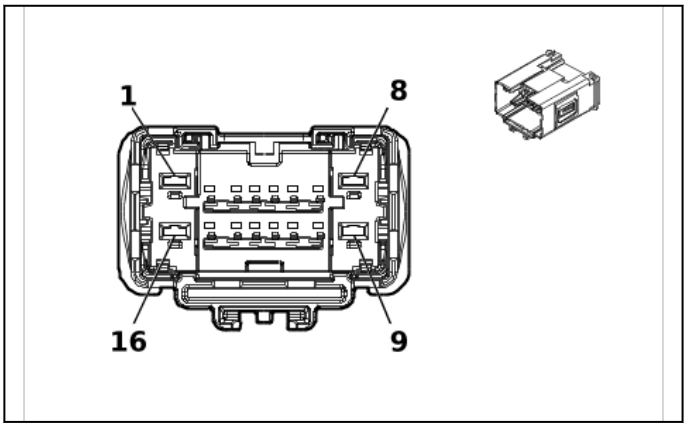

6049238

Connector Part Information

- Harness Type: Body Wiring Harness
- OEM Connector: 35465015
- Service Connector: 13543061
- Description: 16-Way F 1.2, 2.8 OCS Series(BK)

Connector Part Information

- Harness Type: Body Wiring Harness
- OEM Connector: 35465017
- Service Connector: 13543064
- Description: 16-Way M 1.2, 2.8 OCS Series(BK)

Terminal Part Information

Terminal Type ID	Terminated Lead	Diagnostic Test Probe	Terminal Removal Tool
I	19370818	J-35616-12 (BU)	J-38125-215A
II	85524896	J-35616-4A (PU)	J-38125-215A
III	19355732	J-35616-5 (PU)	J-38125-215A
IV	84867140	J-35616-13 (BU)	J-38125-215A

X309 Body Wiring Harness to Body Wiring Harness

Pin	Size	Color	Circuit	Terminal Type ID	Option	Function	Pin	Size	Color	Circuit	Terminal Type ID	Option
(1) 1	(1) 1 (1) 0.75	(1) RD / BN (1) RD / BN	(1) 4940 (1) 4940	(1) II (1) II	(1) (UGN / UKI / UKW) (1) UKR	(1) Battery Positive Voltage (1) Battery Positive Voltage	(1) 1	(1) 1	(1) RD / BN	(1) 4940	(1) III	(1) —
(2) 2	(2) 0.5	(2) RD / WH	(2) 4740	(2) I	(2) —	(2) Battery Positive Voltage	(2) 2	(2) 0.5	(2) RD / WH	(2) 4740	(2) IV	(2) —
3	—	—	—	—	—	Not Occupied	3	—	—	—	—	—
(4) 4	(4) 0.35	(4) W H	(4) 4100	(4) I	(4) —	(4) AUTOSAR CAN Bus [-] 4 Serial Data	(4) 4	(4) 0.35	(4) W H	(4) 4100	(4) IV	(4) —
5	—	—	—	—	—	Not Occupied	5	—	—	—	—	—
(6) 6	(6) 0.75	(6) GY / WH	(6) 8577	(6) I	(6) —	(6) Right Rear D-Pillar Speaker [-] Control	(6) 6	(6) 0.75	(6) GY / WH	(6) 8577	(6) IV	(6) —
7 - 8	—	—	—	—	—	Not Occupied	7 - 8	—	—	—	—	—
(9) 9	(9) 0.5	(9) RD / GY	(9) 4840	(9) II	(9) —	(9) Battery Positive Voltage	(9) 9	(9) 0.5	(9) RD / GY	(9) 4840	(9) III	(9) —

Pin	Size	Color	Circuit	Terminal Type ID	Option	Function	Pin	Size	Color	Circuit	Terminal Type ID	Option
10 - 11	—	—	—	—	—	Not Occupied	10 - 11	—	—	—	—	—
(12) 12	(12) 0.35	(12) B U / VT	(12) 41 01	(12) I	(12) —	(12) AUTOSA R CAN Bus [+] 4 Serial Data	(12) 12	(12) 0.35	(12) B U / VT	(12) 41 01	(12) IV	(12) —
13	—	—	—	—	—	Not Occupied	13	—	—	—	—	—
(14) 14	(14) 0.75	(14) V T	(14) 85 78	(14) I	(14) —	(14) Right Rear D-Pillar Speaker [+] Control	(14) 14	(14) 0.75	(14) V T	(14) 85 78	(14) IV	(14) —
15 - 16	—	—	—	—	—	Not Occupied	15 - 16	—	—	—	—	—

X328 Front Seat Wiring Harness - Driver to Body Wiring Harness (- (5W4 / 9C1))

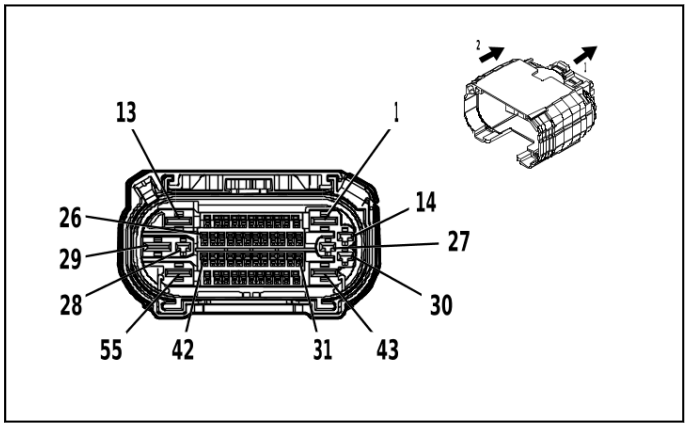

4992168

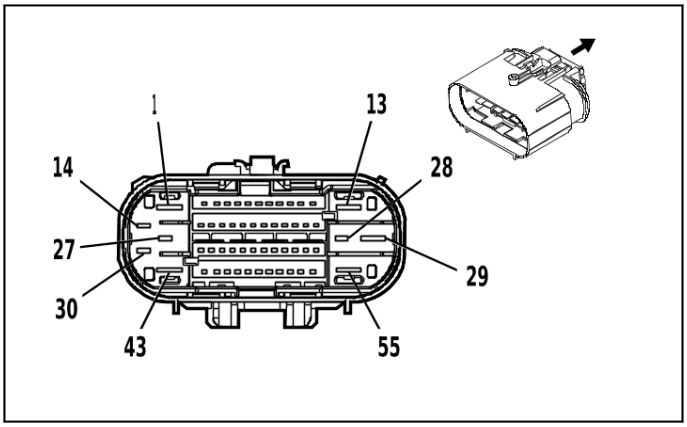

4993301

Connector Part Information
- Harness Type: Front Seat Wiring Harness - Driver
- OEM Connector: Not Available
- Service Connector: Service by Harness - See Part Catalog
- Description: 55-Way F

Connector Part Information
- Harness Type: Body Wiring Harness
- OEM Connector: 35205173
- Service Connector: 84727364
- Description: 55-Way M 1.2 OCS, 2.8, 6.3 CTS Series, Sealed(BK)

Terminal Part Information

Terminal Type ID	Terminated Lead	Diagnostic Test Probe	Terminal Removal Tool
I	Not required	No Tool Required	No Tool Required
II	84847992	J-35616-32 (OG)	J-38125-36
III	84867140	J-35616-13 (BU)	J-38125-215A
IV	87838750	J-35616-13 (BU)	J-38125-215A

X328 Front Seat Wiring Harness - Driver to Body Wiring Harness (- (5W4 / 9C1))

Pin	Size	Color	Circuit	Terminal Type ID	Option	Function	Pin	Size	Color	Circuit	Terminal Type ID	Option
(1) 1	(1) 2. 5	(1) BK	(1) 115 0	(1) I	(1) —	(1) Ground	(1) 1	(1) 2. 5	(1) BK	(1) 115 0	(1) II	(1) —
2	—	—	—	—	—	Not Occupied	2	—	—	—	—	—

Pin	Size	Color	Circuit	Terminal Type ID	Option	Function	Pin	Size	Color	Circuit	Terminal Type ID	Option
(3) 3	(3) 0.5	(3) GN / WH	(3) 7530	(3) I	(3) —	(3) Driver Seat Adjuster Memory Module LIN Bus 1	(3) 3	(3) 0.5	(3) GN / WH	(3) 7530	(3) III	(3) —
(4) 4	(4) 0.75	(4) RD / BN	(4) 2240	(4) I	(4) —	(4) Battery Positive Voltage	(4) 4	(4) 0.75	(4) RD / BN	(4) 2240	(4) III	(4) —
(5) 5	(5) 0.5	(5) WH	(5) 615	(5) I	(5) —	(5) Seat Memory Switch Signal 1	(5) 5	(5) 0.5	(5) WH	(5) 615	(5) III	(5) —
(6) 6	(6) 0.5	(6) BU / GN	(6) 614	(6) I	(6) —	(6) Seat Memory Switch Set Signal	(6) 6	(6) 0.5	(6) BU / GN	(6) 614	(6) III	(6) —
7 - 9	—	—	—	—	—	Not Occupied	7 - 9	—	—	—	—	—
(10) 10	(10) 0.5	(10) BK / YE	(10) 2080	(10) I	(10) —	(10) Driver Heated Seat Thermistor Low Reference	(10) 10	(10) 0.5	(10) BK / YE	(10) 2080	(10) III	(10) —
(11) 11	(11) 0.5	(11) YE / GY	(11) 2079	(11) I	(11) —	(11) Driver Seat Heating Temperature Sensor Signal	(11) 11	(11) 0.5	(11) YE / GY	(11) 2079	(11) III	(11) —
(12) 12	(12) 0.75	(12) RD / BN	(12) 3640	(12) I	(12) —	(12) Battery Positive Voltage	(12) 12	(12) 0.75	(12) RD / BN	(12) 3640	(12) III	(12) —
13 - 14	—	—	—	—	—	Not Occupied	13 - 14	—	—	—	—	—
(15) 15	(15) 0.75	(15) BN / VT	(15) 2077	(15) I	(15) —	(15) Driver Seat Heating Element Control	(15) 15	(15) 0.75	(15) BN / VT	(15) 2077	(15) III	(15) —
(16) 16	(16) 0.75	(16) BN / BK	(16) 2078	(16) I	(16) —	(16) Driver Seat Heating Element Low Reference	(16) 16	(16) 0.75	(16) BN / BK	(16) 2078	(16) III	(16) —
17	—	—	—	—	—	Not Occupied	17	—	—	—	—	—
(18) 18	(18) 0.5	(18) BU	(18) 2425	(18) I	(18) —	(18) Driver Seat Back Heating Temperature Sensor Signal	(18) 18	(18) 0.5	(18) BU	(18) 2425	(18) III	(18) —
(19) 19	(19) 0.75	(19) BN	(19) 2432	(19) I	(19) —	(19) Driver Seat Back Heating Element Control	(19) 19	(19) 0.75	(19) BN	(19) 2432	(19) III	(19) —
(20) 20	(20) 0.5	(20) GN / VT	(20) 5906	(20) I	(20) —	(20) Driver Seat Blower Motor Control 1	(20) 20	(20) 0.5	(20) GN / VT	(20) 5906	(20) III	(20) —
(21) 21	(21) 0.5	(21) VT / WH	(21) 1139	(21) I	(21) —	(21) Run/ Crank Ignition 1 Voltage	(21) 21	(21) 0.5	(21) VT / WH	(21) 1139	(21) III	(21) —
(22) 22	(22) 0.75	(22) BK / WH	(22) 1451	(22) I	(22) —	(22) Signal Ground	(22) 22	(22) 0.75	(22) BK / WH	(22) 1451	(22) III	(22) —

Pin	Size	Color	Circuit	Terminal Type ID	Option	Function	Pin	Size	Color	Circuit	Terminal Type ID	Option
23 - 24	—	—	—	—	—	Not Occupied	23 - 24	—	—	—	—	—
(25) 25	(25) 0.5	(25) B U / VT	(25) 41 01	(25) I	(25) —	(25) AUTOSA R CAN Bus [+] 4 Serial Data	(25) 25	(25) 0.5	(25) B U / VT	(25) 41 01	(25) III	(25) —
(26) 26	(26) 0.5	(26) WH	(26) 41 00	(26) I	(26) —	(26) AUTOSA R CAN Bus [-] 4 Serial Data	(26) 26	(26) 0.5	(26) WH	(26) 41 00	(26) III	(26) —
27 - 28	—	—	—	—	—	Not Occupied	27 - 28	—	—	—	—	—
(29) 29	(29) 2.5	(29) R D / YE	(29) 50 40	(29) I	(29) —	(29) Battery Positive Volt- age	(29) 29	(29) 2.5	(29) R D / YE	(29) 50 40	(29) II	(29) —
30	—	—	—	—	—	Not Occupied	30	—	—	—	—	—
(31) 31	(31) 0.5	(31) G Y	(31) 15 7	(31) I	(31) —	(31) Interior Lamp Control	(31) 31	(31) 0.5	(31) G Y	(31) 15 7	(31) III	(31) —
(32) 32	(32) 0.5	(32) O G / GY	(32) 26 52	(32) I	(32) —	(32) Driver Seat Belt Sensor Signal	(32) 32	(32) 0.5	(32) O G / GY	(32) 26 52	(32) III	(32) —
(33) 33	(33) 0.5	(33) B K / OG	(33) 13 63	(33) I	(33) —	(33) Driver Seat Belt Switch Low Reference	(33) 33	(33) 0.5	(33) B K / OG	(33) 13 63	(33) III	(33) —
34	—	—	—	—	—	Not Occupied	34	—	—	—	—	—
(35) 35	(35) 0.5	(35) O G / BU	(35) 49 62	(35) I	(35) —	(35) Driver Seat Back Air Bag High Control	(35) 35	(35) 0.5	(35) O G / BU	(35) 49 62	(35) III	(35) —
(36) 36	(36) 0.5	(36) B K / OG	(36) 49 63	(36) I	(36) —	(36) Driver Seat Back Air Bag Low Control	(36) 36	(36) 0.5	(36) B K / OG	(36) 49 63	(36) III	(36) —
37 - 47	—	—	—	—	—	Not Occupied	37 - 47	—	—	—	—	—
(48) 48	(48) 0.35	(48) Y E / BN	(48) 30 37	(48) I	(48) —	(48) Driver Seat Left Rear Haptic Movement Motor Control	(48) 48	(48) 0.35	(48) Y E / BN	(48) 30 37	(48) III	(48) —
(49) 49	(49) 0.35	(49) B N	(49) 30 38	(49) I	(49) —	(49) Driver Seat Right Rear Haptic Movement Motor Control	(49) 49	(49) 0.35	(49) B N	(49) 30 38	(49) III	(49) —
(50) 50	(50) 0.35	(50) B U / VT	(50) 41 01	(50) I	(50) —	(50) AUTOSA R CAN Bus [+] 4 Serial Data	(50) 50	(50) 0.35	(50) B U / VT	(50) 41 01	(50) III	(50) —
(51) 51	(51) 0.35	(51) WH	(51) 41 00	(51) I	(51) —	(51) AUTOSA R CAN Bus [-] 4 Serial Data	(51) 51	(51) 0.35	(51) WH	(51) 41 00	(51) III	(51) —
(52) 52	(52) 0.5	(52) O G / BN	(52) 42 07	(52) I	(52) —	(52) Driver Inboard Seat Side Air Bag High Control	(52) 52	(52) 0.5	(52) O G / BN	(52) 42 07	(52) IV	(52) —

Pin	Size	Color	Circuit	Terminal Type ID	Option	Function	Pin	Size	Color	Circuit	Terminal Type ID	Option
(53) 53	(53) 0.5	(53) G Y / OG	(53) 42 08	(53) I	(53) —	(53) Driver Inboard Seat Side Air Bag Low Control	(53) 53	(53) 0.5	(53) G Y / OG	(53) 42 08	(53) IV	(53) —
54 - 55	—	—	—	—	—	Not Occupied	54 - 55	—	—	—	—	—

X328 Front Seat Wiring Harness - Driver to Body Wiring Harness (5W4 / 9C1)

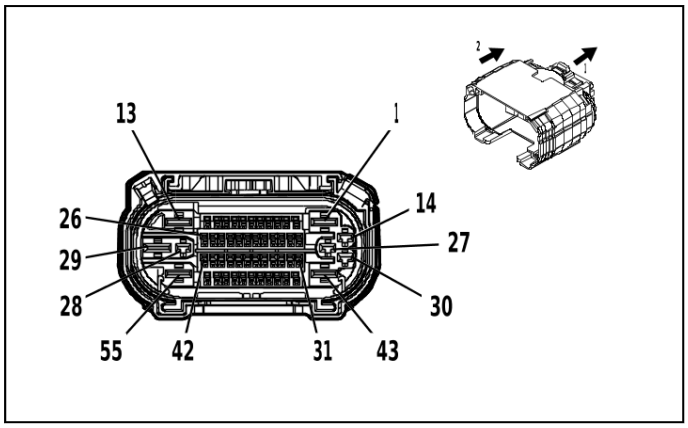

4992168

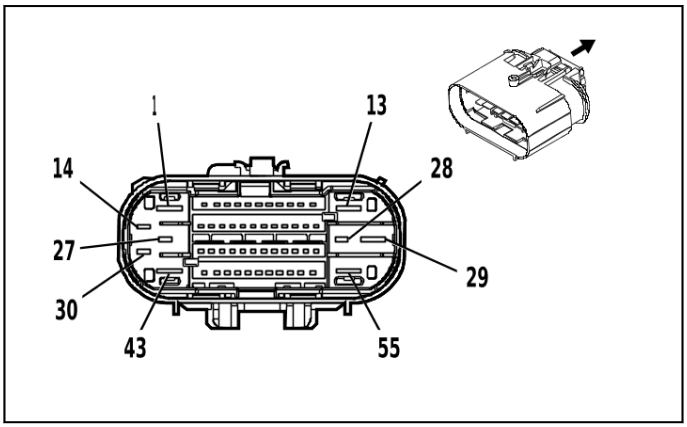

4993301

Connector Part Information
- Harness Type: Front Seat Wiring Harness - Driver
- OEM Connector: Not Available
- Service Connector: Service by Harness - See Part Catalog
- Description: 55-Way F

Connector Part Information
- Harness Type: Body Wiring Harness
- OEM Connector: 35501904
- Service Connector: 84727364
- Description: 55-Way M 1.2 OCS, 2.8, 6.3 CTS Series, Sealed(BK)

Terminal Part Information

Terminal Type ID	Terminated Lead	Diagnostic Test Probe	Terminal Removal Tool
I	Not required	No Tool Required	No Tool Required
II	84847992	J-35616-32 (OG)	J-38125-36
III	84867140	J-35616-13 (BU)	J-38125-215A

X328 Front Seat Wiring Harness - Driver to Body Wiring Harness (5W4 / 9C1)

Pin	Size	Color	Circuit	Terminal Type ID	Option	Function	Pin	Size	Color	Circuit	Terminal Type ID	Option
(1) 1	(1) 2.5	(1) BK	(1) 1150	(1) I	(1) —	(1) Ground	(1) 1	(1) 2.5	(1) BK	(1) 1150	(1) II	(1) —
2 - 28	—	—	—	—	—	Not Occupied	2 - 28	—	—	—	—	—
(29) 29	(29) 2.5	(29) R D / YE	(29) 50 40	(29) I	(29) —	(29) Battery Positive Voltage	(29) 29	(29) 2.5	(29) R D / YE	(29) 50 40	(29) II	(29) —
30	—	—	—	—	—	Not Occupied	30	—	—	—	—	—
(31) 31	(31) 0.5	(31) G Y	(31) 15 7	(31) I	(31) —	(31) Interior Lamp Control	(31) 31	(31) 0.5	(31) G Y	(31) 15 7	(31) III	(31) —

Pin	Size	Color	Circuit	Terminal Type ID	Option	Function	Pin	Size	Color	Circuit	Terminal Type ID	Option
(32) 32	(32) 0.5	(32) OG / GY	(32) 26 52	(32) I	(32) —	(32) Driver Seat Belt Sensor Signal	(32) 32	(32) 0.5	(32) OG / GY	(32) 26 52	(32) III	(32) —
(33) 33	(33) 0.5	(33) BK / OG	(33) 13 63	(33) I	(33) —	(33) Driver Seat Belt Switch Low Reference	(33) 33	(33) 0.5	(33) BK / OG	(33) 13 63	(33) III	(33) —
34	—	—	—	—	—	Not Occupied	34	—	—	—	—	—
(35) 35	(35) 0.5	(35) OG / BU	(35) 49 62	(35) I	(35) —	(35) Driver Seat Back Air Bag High Control	(35) 35	(35) 0.5	(35) OG / BU	(35) 49 62	(35) III	(35) —
(36) 36	(36) 0.5	(36) BK / OG	(36) 49 63	(36) I	(36) —	(36) Driver Seat Back Air Bag Low Control	(36) 36	(36) 0.5	(36) BK / OG	(36) 49 63	(36) III	(36) —
37 - 55	—	—	—	—	—	Not Occupied	37 - 55	—	—	—	—	—

X329 Body Wiring Harness to Front Seat Wiring Harness - Driver (UW9)

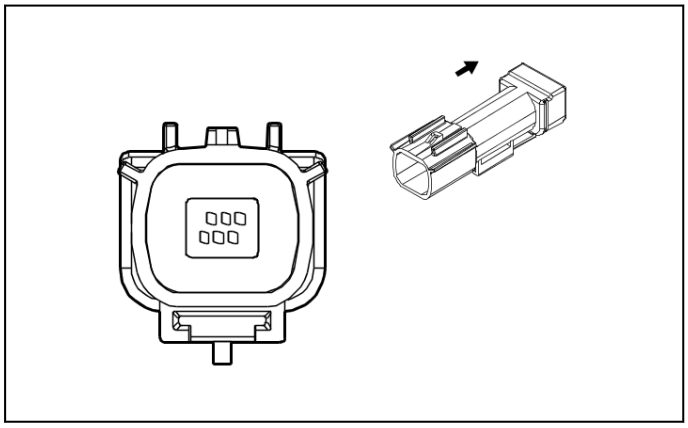

4477041

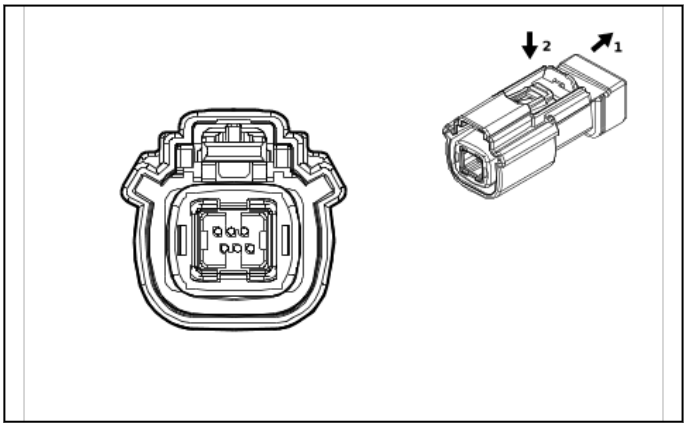

4477145

Connector Part Information
- Harness Type: Body Wiring Harness
- OEM Connector: 111194-1018
- Service Connector: Service by Cable Assembly — See Part Catalog
- Description: 6-Way F HSAL-2 Series, Sealed(BK)

Connector Part Information
- Harness Type: Front Seat Wiring Harness - Driver
- OEM Connector: Not Available
- Service Connector: Service by Cable Assembly — See Part Catalog
- Description: 6-Way M (BK)

Terminal Part Information

Terminal Type ID	Terminated Lead	Diagnostic Test Probe	Terminal Removal Tool
I	Not required	No Tool Required	No Tool Required

X329 Body Wiring Harness to Front Seat Wiring Harness - Driver (UW9)

Pin	Size	Color	Circuit	Terminal Type ID	Option	Function	Pin	Size	Color	Circuit	Terminal Type ID	Option
—	—	LVDS	—	I	—	Rear Seat Infotainment Auxiliary Audio/Video Jack LVDS (Low Voltage Differential Signaling) Low Reference	—	—	LVDS	—	I	—

X333 Front Seat Wiring Harness - Passenger to Body Wiring Harness (- (5W4 / 9C1))

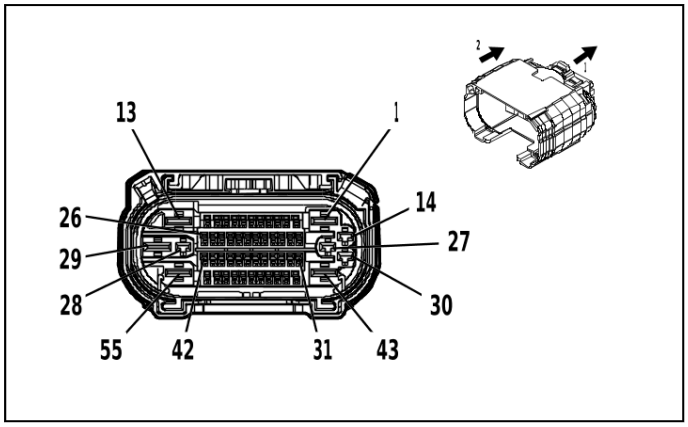

4992168

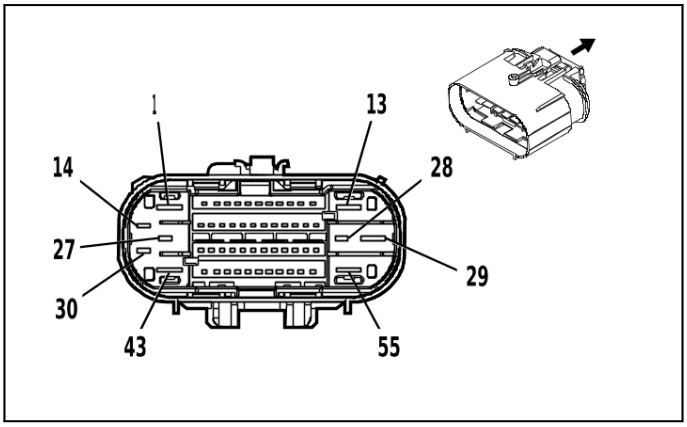

4993301

Connector Part Information
- Harness Type: Front Seat Wiring Harness - Passenger
- OEM Connector: Not Available
- Service Connector: Service by Harness - See Part Catalog
- Description: 55-Way F

Connector Part Information
- Harness Type: Body Wiring Harness
- OEM Connector: 35205173
- Service Connector: 84727364
- Description: 55-Way M 1.2 OCS, 2.8, 6.3 CTS Series, Sealed(BK)

Terminal Part Information

Terminal Type ID	Terminated Lead	Diagnostic Test Probe	Terminal Removal Tool
I	Not required	No Tool Required	No Tool Required
II	84847992	J-35616-32 (OG)	J-38125-36
III	84867140	J-35616-13 (BU)	J-38125-215A
IV	84992391	J-35616-5 (PU)	J-38125-36

X333 Front Seat Wiring Harness - Passenger to Body Wiring Harness (- (5W4 / 9C1))

Pin	Size	Color	Circuit	Terminal Type ID	Option	Function	Pin	Size	Color	Circuit	Terminal Type ID	Option
(1) 1	(1) 2.5	(1) BK	(1) 1250	(1) I	(1) —	(1) Ground	(1) 1	(1) 2.5	(1) BK	(1) 1250	(1) II	(1) —
2 - 3	—	—	—	—	—	Not Occupied	2 - 3	—	—	—	—	—
(4) 4	(4) 0.75	(4) RD / BU	(4) 3940	(4) I	(4) —	(4) Battery Positive Voltage	(4) 4	(4) 0.75	(4) RD / BU	(4) 3940	(4) III	(4) —

Pin	Size	Color	Circuit	Terminal Type ID	Option	Function	Pin	Size	Color	Circuit	Terminal Type ID	Option
5 - 6	—	—	—	—	—	Not Occupied	5 - 6	—	—	—	—	—
(7) 7	(7) 0.5	(7) BU	(7) 4987	(7) I	(7) —	(7) AUTOSAR CAN Bus [+] 1 Serial Data	(7) 7	(7) 0.5	(7) BU	(7) 4987	(7) III	(7) —
(8) 8	(8) 0.5	(8) WH	(8) 4986	(8) I	(8) —	(8) AUTOSAR CAN Bus [-] 1 Serial Data	(8) 8	(8) 0.5	(8) WH	(8) 4986	(8) III	(8) —
(9) 9	(9) 0.5	(9) GN / VT	(9) 2857	(9) I	(9) —	(9) Body Control Module LIN Bus 11	(9) 9	(9) 0.5	(9) GN / VT	(9) 2857	(9) III	(9) —
10	—	—	—	—	—	Not Occupied	10	—	—	—	—	—
(11) 11	(11) 0.75	(11) BK / WH	(11) 1451	(11) I	(11) —	(11) Signal Ground	(11) 11	(11) 0.75	(11) BK / WH	(11) 1451	(11) III	(11) —
(12) 12	(12) 0.75	(12) RD / BN	(12) 3640	(12) I	(12) —	(12) Battery Positive Voltage	(12) 12	(12) 0.75	(12) RD / BN	(12) 3640	(12) III	(12) —
(13) 13	(13) 0.75	(13) RD / GN	(13) 6140	(13) I	(13) —	(13) Battery Positive Voltage	(13) 13	(13) 0.75	(13) RD / GN	(13) 6140	(13) II	(13) —
(14) 14	(14) 0.5	(14) YE / GY	(14) 2079	(14) I	(14) —	(14) Driver Seat Heating Temperature Sensor Signal	(14) 14	(14) 0.5	(14) YE / GY	(14) 2079	(14) IV	(14) —
(15) 15	(15) 0.75	(15) BN / VT	(15) 2077	(15) I	(15) —	(15) Driver Seat Heating Element Control	(15) 15	(15) 0.75	(15) BN / VT	(15) 2077	(15) III	(15) —
(16) 16	(16) 0.75	(16) BN / BK	(16) 2078	(16) I	(16) —	(16) Driver Seat Heating Element Low Reference	(16) 16	(16) 0.75	(16) BN / BK	(16) 2078	(16) III	(16) —
(17) 17	(17) 0.5	(17) BK / YE	(17) 2080	(17) I	(17) —	(17) Driver Heated Seat Thermistor Low Reference	(17) 17	(17) 0.5	(17) BK / YE	(17) 2080	(17) III	(17) —
(18) 18	(18) 0.5	(18) BU	(18) 2425	(18) I	(18) —	(18) Driver Seat Back Heating Temperature Sensor Signal	(18) 18	(18) 0.5	(18) BU	(18) 2425	(18) III	(18) —
(19) 19	(19) 0.75	(19) BN	(19) 2432	(19) I	(19) —	(19) Driver Seat Back Heating Element Control	(19) 19	(19) 0.75	(19) BN	(19) 2432	(19) III	(19) —
(20) 20	(20) 0.5	(20) GN / VT	(20) 5906	(20) I	(20) —	(20) Driver Seat Blower Motor Control 1	(20) 20	(20) 0.5	(20) GN / VT	(20) 5906	(20) III	(20) —
(21) 21	(21) 0.5	(21) VT / WH	(21) 1139	(21) I	(21) —	(21) Run/ Crank Ignition 1 Voltage	(21) 21	(21) 0.5	(21) VT / WH	(21) 1139	(21) III	(21) —
(22) 22	(22) 0.5	(22) RD / GN	(22) 4440	(22) I	(22) —	(22) Battery Positive Voltage	(22) 22	(22) 0.5	(22) RD / GN	(22) 4440	(22) III	(22) —

Pin	Size	Color	Circuit	Terminal Type ID	Option	Function	Pin	Size	Color	Circuit	Terminal Type ID	Option
23	—	—	—	—	—	Not Occupied	23	—	—	—	—	—
(24) 24	(24) 0.5	(24) GY / OG	(24) 39 46	(24) I	(24) —	(24) Passenger Automatic Locking Retractor Switch Low Reference	(24) 24	(24) 0.5	(24) GY / OG	(24) 39 46	(24) III	(24) —
(25) 25	(25) 0.5	(25) OG / BN	(25) 39 47	(25) I	(25) —	(25) Passenger Automatic Locking Retractor Switch Signal	(25) 25	(25) 0.5	(25) OG / BN	(25) 39 47	(25) III	(25) —
(26) 26	(26) 0.5	(26) BK / WH	(26) 13 51	(26) I	(26) —	(26) Signal Ground	(26) 26	(26) 0.5	(26) BK / WH	(26) 13 51	(26) III	(26) —
(27) 27	(27) 0.75	(27) RD / BN	(27) 66 40	(27) I	(27) —	(27) Battery Positive Voltage	(27) 27	(27) 0.75	(27) RD / BN	(27) 66 40	(27) IV	(27) —
28	—	—	—	—	—	Not Occupied	28	—	—	—	—	—
(29) 29	(29) 2.5	(29) RD / YE	(29) 74 40	(29) I	(29) —	(29) Battery Positive Voltage	(29) 29	(29) 2.5	(29) RD / YE	(29) 74 40	(29) II	(29) —
30	—	—	—	—	—	Not Occupied	30	—	—	—	—	—
(31) 31	(31) 0.5	(31) GY	(31) 15 7	(31) I	(31) —	(31) Interior Lamp Control	(31) 31	(31) 0.5	(31) GY	(31) 15 7	(31) III	(31) —
(32) 32	(32) 0.5	(32) OG / VT	(32) 13 62	(32) I	(32) —	(32) Passenger Seat Belt Switch Signal	(32) 32	(32) 0.5	(32) OG / VT	(32) 13 62	(32) III	(32) —
(33) 33	(33) 0.5	(33) BK / OG	(33) 13 63	(33) I	(33) —	(33) Driver Seat Belt Switch Low Reference	(33) 33	(33) 0.5	(33) BK / OG	(33) 13 63	(33) III	(33) —
34	—	—	—	—	—	Not Occupied	34	—	—	—	—	—
(35) 35	(35) 0.5	(35) OG / GY	(35) 49 56	(35) I	(35) —	(35) Passenger Seat Back Air Bag High Control	(35) 35	(35) 0.5	(35) OG / GY	(35) 49 56	(35) III	(35) —
(36) 36	(36) 0.5	(36) BU / OG	(36) 49 57	(36) I	(36) —	(36) Passenger Seat Back Air Bag Low Control	(36) 36	(36) 0.5	(36) BU / OG	(36) 49 57	(36) III	(36) —
37 - 51	—	—	—	—	—	Not Occupied	37 - 51	—	—	—	—	—
(52) 52	(52) 0.5	(52) BU	(52) 49 87	(52) I	(52) —	(52) AUTOSAR CAN Bus [+] 1 Serial Data	(52) 52	(52) 0.5	(52) BU	(52) 49 87	(52) III	(52) —
(53) 53	(53) 0.5	(53) WH	(53) 49 86	(53) I	(53) —	(53) AUTOSAR CAN Bus [-] 1 Serial Data	(53) 53	(53) 0.5	(53) WH	(53) 49 86	(53) III	(53) —
54 - 55	—	—	—	—	—	Not Occupied	54 - 55	—	—	—	—	—

X333 Front Seat Wiring Harness - Passenger to Body Wiring Harness (5W4 / 9C1)

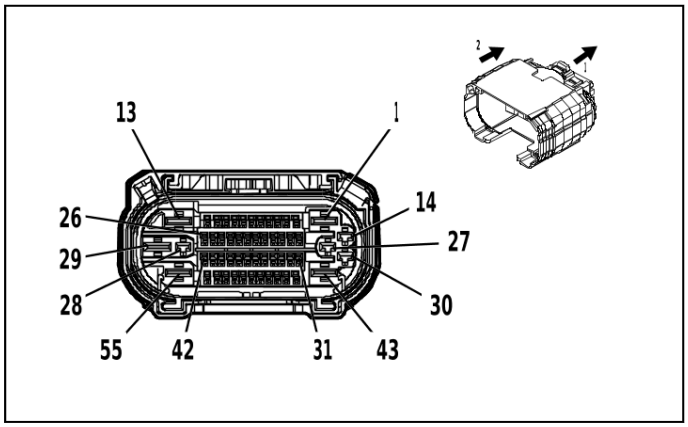

4992168

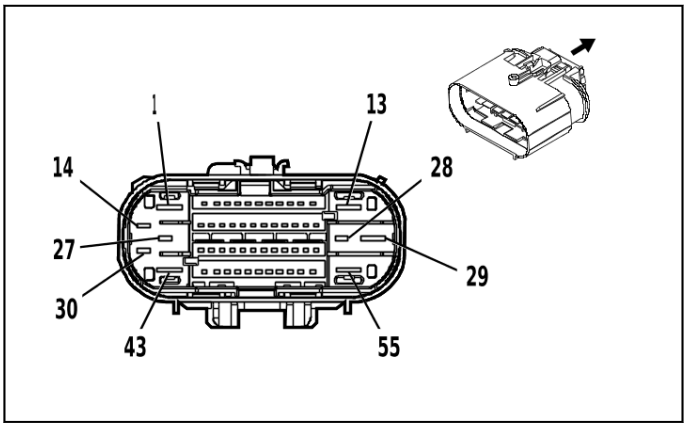

4993301

Connector Part Information
- Harness Type: Front Seat Wiring Harness - Passenger
- OEM Connector: Not Available
- Service Connector: Service by Harness - See Part Catalog
- Description: 55-Way F

Connector Part Information
- Harness Type: Body Wiring Harness
- OEM Connector: 35501906
- Service Connector: 84727364
- Description: 55-Way M 1.2 OCS, 2.8, 6.3 CTS Series, Sealed(BK)

Terminal Part Information

Terminal Type ID	Terminated Lead	Diagnostic Test Probe	Terminal Removal Tool
I	Not required	No Tool Required	No Tool Required
II	84847992	J-35616-32 (OG)	J-38125-36
III	84867140	J-35616-13 (BU)	J-38125-215A

X333 Front Seat Wiring Harness - Passenger to Body Wiring Harness (5W4 / 9C1)

Pin	Size	Color	Circuit	Terminal Type ID	Option	Function	Pin	Size	Color	Circuit	Terminal Type ID	Option
(1) 1	(1) 2.5	(1) BK	(1) 1250	(1) I	(1) —	(1) Ground	(1) 1	(1) 2.5	(1) BK	(1) 1250	(1) II	(1) —
2 - 6	—	—	—	—	—	Not Occupied	2 - 6	—	—	—	—	—
(7) 7	(7) 0.5	(7) BU	(7) 4987	(7) I	(7) —	(7) AUTOSAR CAN Bus [+] 1 Serial Data	(7) 7	(7) 0.5	(7) BU	(7) 4987	(7) III	(7) —
(8) 8	(8) 0.5	(8) WH	(8) 4986	(8) I	(8) —	(8) AUTOSAR CAN Bus [-] 1 Serial Data	(8) 8	(8) 0.5	(8) WH	(8) 4986	(8) III	(8) —
9 - 21	—	—	—	—	—	Not Occupied	9 - 21	—	—	—	—	—
(22) 22	(22) 0.5	(22) RD / GN	(22) 4440	(22) I	(22) —	(22) Battery Positive Voltage	(22) 22	(22) 0.5	(22) RD / GN	(22) 4440	(22) III	(22) —
23	—	—	—	—	—	Not Occupied	23	—	—	—	—	—
(24) 24	(24) 0.5	(24) GY / OG	(24) 3946	(24) I	(24) —	(24) Passenger Automatic Locking Retractor Switch Low Reference	(24) 24	(24) 0.5	(24) GY / OG	(24) 3946	(24) III	(24) —

Pin	Size	Color	Circuit	Terminal Type ID	Option	Function	Pin	Size	Color	Circuit	Terminal Type ID	Option
(25) 25	(25) 0.5	(25) OG / BN	(25) 39 47	(25) I	(25) —	(25) Passenger Automatic Locking Retractor Switch Signal	(25) 25	(25) 0.5	(25) OG / BN	(25) 39 47	(25) III	(25) —
(26) 26	(26) 0.5	(26) BK / WH	(26) 13 51	(26) I	(26) —	(26) Signal Ground	(26) 26	(26) 0.5	(26) BK / WH	(26) 13 51	(26) III	(26) —
27 - 28	—	—	—	—	—	Not Occupied	27 - 28	—	—	—	—	—
(29) 29	(29) 2.5	(29) RD / YE	(29) 74 40	(29) I	(29) —	(29) Battery Positive Voltage	(29) 29	(29) 2.5	(29) RD / YE	(29) 74 40	(29) II	(29) —
30	—	—	—	—	—	Not Occupied	30	—	—	—	—	—
(31) 31	(31) 0.5	(31) GY	(31) 15 7	(31) I	(31) —	(31) Interior Lamp Control	(31) 31	(31) 0.5	(31) GY	(31) 15 7	(31) III	(31) —
(32) 32	(32) 0.5	(32) OG / VT	(32) 13 62	(32) I	(32) —	(32) Passenger Seat Belt Switch Signal	(32) 32	(32) 0.5	(32) OG / VT	(32) 13 62	(32) III	(32) —
(33) 33	(33) 0.5	(33) BK / OG	(33) 13 63	(33) I	(33) —	(33) Driver Seat Belt Switch Low Reference	(33) 33	(33) 0.5	(33) BK / OG	(33) 13 63	(33) III	(33) —
34	—	—	—	—	—	Not Occupied	34	—	—	—	—	—
(35) 35	(35) 0.5	(35) OG / GY	(35) 49 56	(35) I	(35) —	(35) Passenger Seat Back Air Bag High Control	(35) 35	(35) 0.5	(35) OG / GY	(35) 49 56	(35) III	(35) —
(36) 36	(36) 0.5	(36) BU / OG	(36) 49 57	(36) I	(36) —	(36) Passenger Seat Back Air Bag Low Control	(36) 36	(36) 0.5	(36) BU / OG	(36) 49 57	(36) III	(36) —
37 - 51	—	—	—	—	—	Not Occupied	37 - 51	—	—	—	—	—
(52) 52	(52) 0.5	(52) BU	(52) 49 87	(52) I	(52) —	(52) AUTOSAR CAN Bus [+] 1 Serial Data	(52) 52	(52) 0.5	(52) BU	(52) 49 87	(52) III	(52) —
(53) 53	(53) 0.5	(53) WH	(53) 49 86	(53) I	(53) —	(53) AUTOSAR CAN Bus [-] 1 Serial Data	(53) 53	(53) 0.5	(53) WH	(53) 49 86	(53) III	(53) —
54 - 55	—	—	—	—	—	Not Occupied	54 - 55	—	—	—	—	—

X340A Body Wiring Harness to Rear Seat Wiring Harness - 2nd Row Left

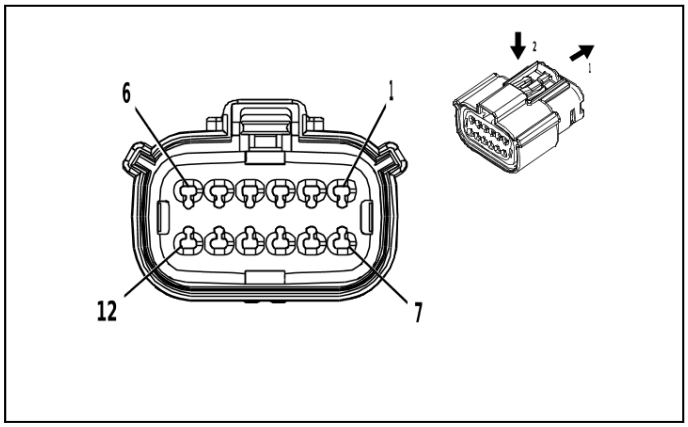

2871860

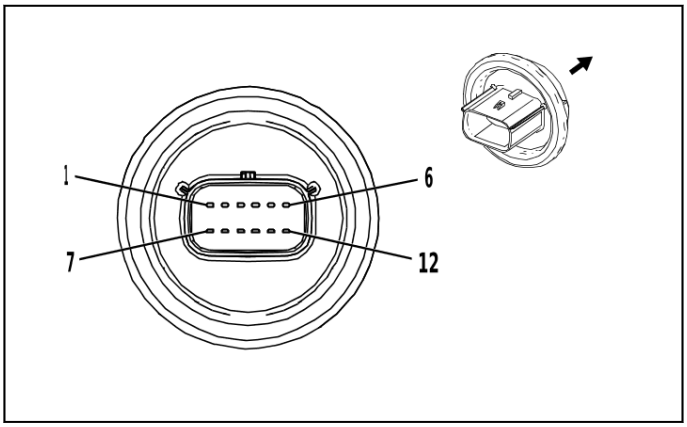

3238775

Connector Part Information
- Harness Type: Body Wiring Harness
- OEM Connector: 33472-1266
- Service Connector: 19352907
- Description: 12-Way F 1.5 MX Series, Sealed(BK)

Connector Part Information
- Harness Type: Rear Seat Wiring Harness - 2nd Row Left
- OEM Connector: Not Available
- Service Connector: Service by Harness - See Part Catalog
- Description: 12-Way M (BK)

Terminal Part Information

Terminal Type ID	Terminated Lead	Diagnostic Test Probe	Terminal Removal Tool
I	85528055	J-35616-2A (GY)	J-38125-217
II	Not required	No Tool Required	No Tool Required

X340A Body Wiring Harness to Rear Seat Wiring Harness - 2nd Row Left

Pin	Size	Color	Circuit	Terminal Type ID	Option	Function	Pin	Size	Color	Circuit	Terminal Type ID	Option
(1) 1	(1) 1	(1) RD / GY	(1) 6240	(1) I	(1) —	(1) Battery Positive Voltage	(1) 1	(1) 1	(1) RD / GY	(1) 6240	(1) II	(1) —
(2) 2	(2) 0.75	(2) GY	(2) 2294	(2) I	(2) —	(2) Left Rear Seat Cushion Heating Element Control	(2) 2	(2) 0.75	(2) GY	(2) 2294	(2) II	(2) —
(3) 3	(3) 0.75	(3) BU / BK	(3) 2446	(3) I	(3) —	(3) Left Rear Seat Heating Element Low Reference	(3) 3	(3) 0.75	(3) BU / BK	(3) 2446	(3) II	(3) —
(4) 4	(4) 0.5	(4) WH / BU	(4) 7047	(4) I	(4) —	(4) Left Rear Seat Cushion Temperature Sensor Signal	(4) 4	(4) 0.5	(4) WH / BU	(4) 7047	(4) II	(4) —
(5) 5	(5) 0.5	(5) BU / WH	(5) 7048	(5) I	(5) —	(5) Left Rear Cushion Thermistor Feedback Signal	(5) 5	(5) 0.5	(5) BU / WH	(5) 7048	(5) II	(5) —
(6) 6	(6) 0.5	(6) GN	(6) 6808	(6) I	(6) —	(6) Left Rear Folding Seat Motor Control	(6) 6	(6) 0.5	(6) GN	(6) 6808	(6) II	(6) —
(7) 7	(7) 0.75	(7) BK	(7) 2050	(7) I	(7) —	(7) Ground	(7) 7	(7) 0.75	(7) BK	(7) 2050	(7) II	(7) —

Pin	Size	Color	Circuit	Terminal Type ID	Option	Function	Pin	Size	Color	Circuit	Terminal Type ID	Option
(8) 8	(8) 0.5	(8) YE / OG	(8) 5161	(8) I	(8) —	(8) Left Rear Seat Belt Switch Signal	(8) 8	(8) 0.5	(8) YE / OG	(8) 5161	(8) II	(8) —
(9) 9	(9) 0.5	(9) BK / OG	(9) 1363	(9) I	(9) —	(9) Driver Seat Belt Switch Low Reference	(9) 9	(9) 0.5	(9) BK / OG	(9) 1363	(9) II	(9) —
(10) 10	(10) 0.5	(10) BU / OG	(10) 5163	(10) I	(10) —	(10) Rear Center Seat Belt Switch Signal	(10) 10	(10) 0.5	(10) BU / OG	(10) 5163	(10) II	(10) —
11 - 12	—	—	—	—	—	Not Occupied	11 - 12	—	—	—	—	—

X344A Body Wiring Harness to Rear Seat Wiring Harness - 2nd Row Right

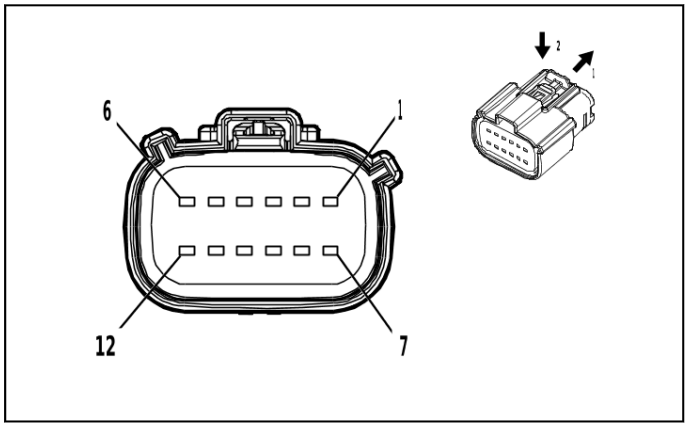

4584248

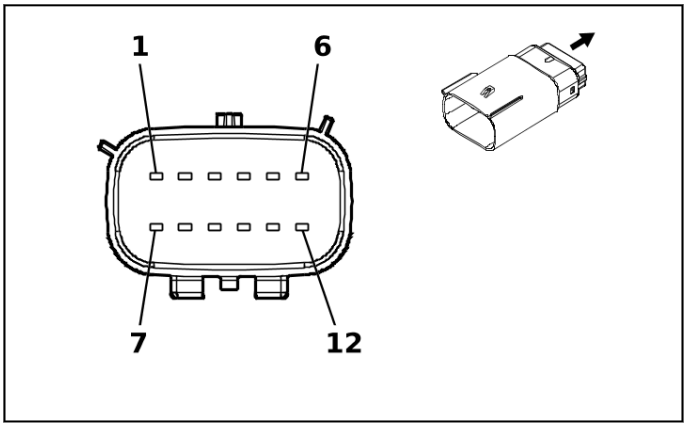

5187933

Connector Part Information
- Harness Type: Body Wiring Harness
- OEM Connector: 33472-1259
- Service Connector: 19333239
- Description: 12-Way F 1.5 MX Series, Sealed(D-GY)

Connector Part Information
- Harness Type: Rear Seat Wiring Harness - 2nd Row Right
- OEM Connector: Not Available
- Service Connector: Service by Harness - See Part Catalog
- Description: 12-Way M (D-GY)

Terminal Part Information

Terminal Type ID	Terminated Lead	Diagnostic Test Probe	Terminal Removal Tool
I	85528055	J-35616-2A (GY)	J-38125-217
II	Not required	No Tool Required	No Tool Required

X344A Body Wiring Harness to Rear Seat Wiring Harness - 2nd Row Right

Pin	Size	Color	Circuit	Terminal Type ID	Option	Function	Pin	Size	Color	Circuit	Terminal Type ID	Option
(1) 1	(1) 0.75	(1) RD / WH	(1) 5740	(1) I	(1) —	(1) Battery Positive Voltage	(1) 1	(1) 0.75	(1) RD / WH	(1) 5740	(1) II	(1) —
(2) 2	(2) 0.75	(2) RD / BU	(2) 6740	(2) I	(2) —	(2) Battery Positive Voltage	(2) 2	(2) 0.75	(2) RD / BU	(2) 6740	(2) II	(2) —

Pin	Size	Color	Circuit	Terminal Type ID	Option	Function	Pin	Size	Color	Circuit	Terminal Type ID	Option
(3) 3	(3) 0.75	(3) GY	(3) 2294	(3) I	(3) —	(3) Left Rear Seat Cushion Heating Element Control	(3) 3	(3) 0.75	(3) GY	(3) 2294	(3) II	(3) —
(4) 4	(4) 0.5	(4) GN / VT	(4) 2857	(4) I	(4) —	(4) Body Control Module LIN Bus 11	(4) 4	(4) 0.5	(4) GN / VT	(4) 2857	(4) II	(4) —
(5) 5	(5) 1	(5) RD / GY	(5) 6240	(5) I	(5) —	(5) Battery Positive Voltage	(5) 5	(5) 1	(5) RD / GY	(5) 6240	(5) II	(5) —
(6) 6	(6) 0.5	(6) BN / WH	(6) 6809	(6) I	(6) —	(6) Right Rear Folding Seat Motor Control	(6) 6	(6) 0.5	(6) BN / WH	(6) 6809	(6) II	(6) —
(7) 7	(7) 0.75	(7) BU / BK	(7) 2446	(7) I	(7) —	(7) Left Rear Seat Heating Element Low Reference	(7) 7	(7) 0.75	(7) BU / BK	(7) 2446	(7) II	(7) —
(8) 8	(8) 0.75	(8) BK	(8) 1450	(8) I	(8) —	(8) Ground	(8) 8	(8) 0.75	(8) BK	(8) 1450	(8) II	(8) —
(9) 9	(9) 0.5	(9) WH / BU	(9) 7047	(9) I	(9) —	(9) Left Rear Seat Cushion Temperature Sensor Signal	(9) 9	(9) 0.5	(9) WH / BU	(9) 7047	(9) II	(9) —
(10) 10	(10) 0.5	(10) BU / WH	(10) 7048	(10) I	(10) —	(10) Left Rear Cushion Thermistor Feedback Signal	(10) 10	(10) 0.5	(10) BU / WH	(10) 7048	(10) II	(10) —
(11) 11	(11) 0.5	(11) BN / OG	(11) 5162	(11) I	(11) —	(11) Right Rear Seat Belt Switch Signal	(11) 11	(11) 0.5	(11) BN / OG	(11) 5162	(11) II	(11) —
(12) 12	(12) 0.5	(12) BK / OG	(12) 1363	(12) I	(12) —	(12) Driver Seat Belt Switch Low Reference	(12) 12	(12) 0.5	(12) BK / OG	(12) 1363	(12) II	(12) —

X344L Body Wiring Harness to Front Seat Wiring Harness - Passenger (UW9)

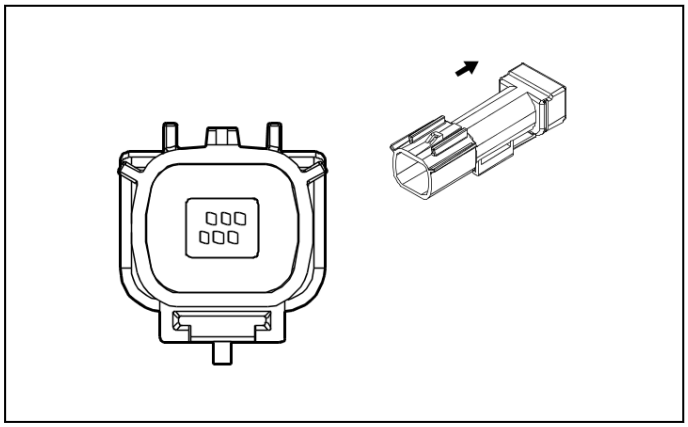

4477041

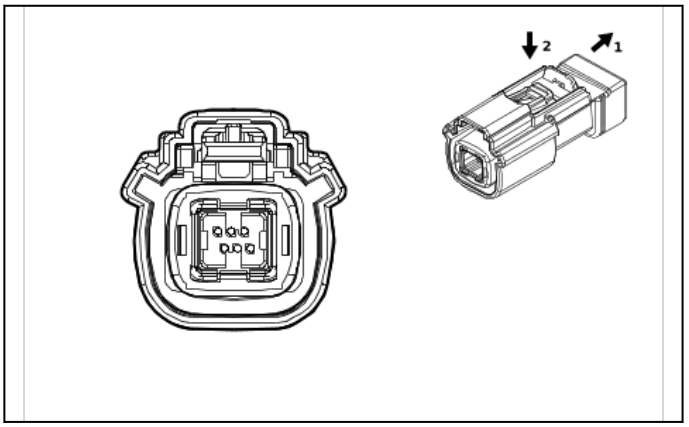

4477145

Connector Part Information
- Harness Type: Body Wiring Harness
- OEM Connector: 111194-1018
- Service Connector: Service by Cable Assembly — See Part Catalog
- Description: 6-Way F HSAL-2 Series, Sealed(BK)

Connector Part Information
- Harness Type: Front Seat Wiring Harness - Passenger
- OEM Connector: Not Available
- Service Connector: Service by Cable Assembly — See Part Catalog
- Description: 6-Way M (BK)

Terminal Part Information

Terminal Type ID	Terminated Lead	Diagnostic Test Probe	Terminal Removal Tool
I	Not required	No Tool Required	No Tool Required

X344L Body Wiring Harness to Front Seat Wiring Harness - Passenger (UW9)

Pin	Size	Color	Circuit	Terminal Type ID	Option	Function	Pin	Size	Color	Circuit	Terminal Type ID	Option
—	—	LVDS	—	I	—	Auxiliary Video Signal	—	—	LVDS	—	I	—

X346 Body Wiring Harness to 3rd Row Seat Wiring Harness

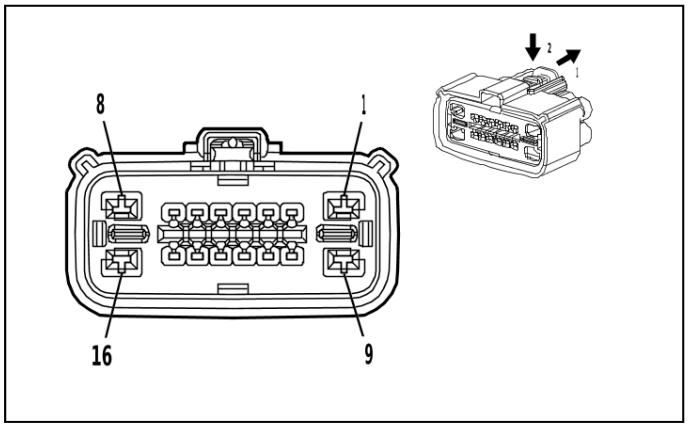

4283035

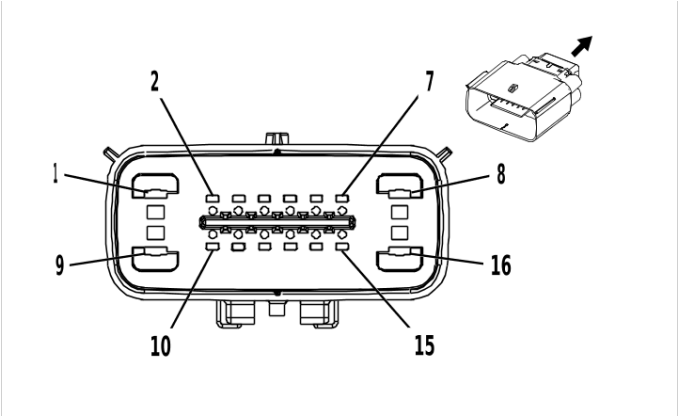

2373686

Connector Part Information
- Harness Type: Body Wiring Harness
- OEM Connector: 34985-4010
- Service Connector: 19352906
- Description: 16-Way F 1.5, 2.8 MX Series, Sealed(BK)

Connector Part Information
- Harness Type: 3rd Row Seat Wiring Harness
- OEM Connector: Not Available
- Service Connector: Service by Harness - See Part Catalog
- Description: 16-Way M (BK)

Terminal Part Information

Terminal Type ID	Terminated Lead	Diagnostic Test Probe	Terminal Removal Tool
I	13576377	J-35616-35 (VT)	J-38125-12A
II	85528055	J-35616-2A (GY)	J-38125-217
III	Not required	No Tool Required	No Tool Required

X346 Body Wiring Harness to 3rd Row Seat Wiring Harness

Pin	Size	Color	Circuit	Terminal Type ID	Option	Function	Pin	Size	Color	Circuit	Terminal Type ID	Option
(1) 1	(1) 2.5	(1) RD / GY	(1) 7840	(1) I	(1) —	(1) Battery Positive Voltage	(1) 1	(1) 2.5	(1) RD / GY	(1) 7840	(1) III	(1) —
2	—	—	—	—	—	Not Occupied	2	—	—	—	—	—
(3) 3	(3) 0.5	(3) GN / BU	(3) 2856	(3) II	(3) —	(3) Body Control Module LIN Bus 10	(3) 3	(3) 0.5	(3) GN / BU	(3) 2856	(3) III	(3) —
(4) 4	(4) 0.5	(4) BK / BU	(4) 5474	(4) II	(4) —	(4) 3rd Row Seat Sensor Low Reference	(4) 4	(4) 0.5	(4) BK / BU	(4) 5474	(4) III	(4) —
5	—	—	—	—	—	Not Occupied	5	—	—	—	—	—
(6) 6	(6) 0.5	(6) YE / BU	(6) 2698	(6) II	(6) —	(6) Left 3rd Row Seat Recline Switch Signal	(6) 6	(6) 0.5	(6) YE / BU	(6) 2698	(6) III	(6) —
(7) 7	(7) 0.5	(7) GN / GY	(7) 2699	(7) II	(7) —	(7) Right 3rd Row Seat Recline Switch Signal	(7) 7	(7) 0.5	(7) GN / GY	(7) 2699	(7) III	(7) —
8	—	—	—	—	—	Not Occupied	8	—	—	—	—	—
(9) 9	(9) 2.5	(9) BK	(9) 1450	(9) I	(9) —	(9) Ground	(9) 9	(9) 2.5	(9) BK	(9) 1450	(9) III	(9) —
10	—	—	—	—	—	Not Occupied	10	—	—	—	—	—
(11) 11	(11) 0.5	(11) GN / OG	(11) 3516	(11) II	(11) —	(11) 3rd Row Left Seat Belt Switch Signal	(11) 11	(11) 0.5	(11) GN / OG	(11) 3516	(11) III	(11) —
(12) 12	(12) 0.5	(12) VT / OG	(12) 3517	(12) II	(12) —	(12) 3rd Row Right Seat Belt Switch Signal	(12) 12	(12) 0.5	(12) VT / OG	(12) 3517	(12) III	(12) —
(13) 13	(13) 0.5	(13) OG / GN	(13) 3700	(13) II	(13) —	(13) 3rd Row Center Seat Belt Switch Signal	(13) 13	(13) 0.5	(13) OG / GN	(13) 3700	(13) III	(13) —
14	—	—	—	—	—	Not Occupied	14	—	—	—	—	—
(15) 15	(15) 0.5	(15) BK / OG	(15) 1363	(15) II	(15) —	(15) Driver Seat Belt Switch Low Reference	(15) 15	(15) 0.5	(15) BK / OG	(15) 1363	(15) III	(15) —
16	—	—	—	—	—	Not Occupied	16	—	—	—	—	—

X353 Fuel Tank Filler Door Lock Release Wiring Harness to Body Wiring Harness (N08)

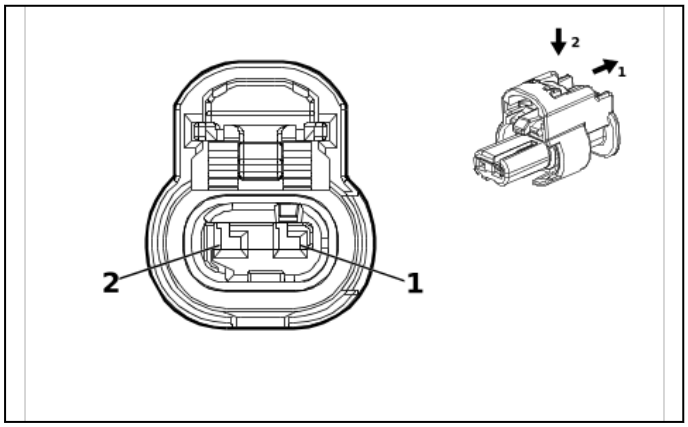

4649903

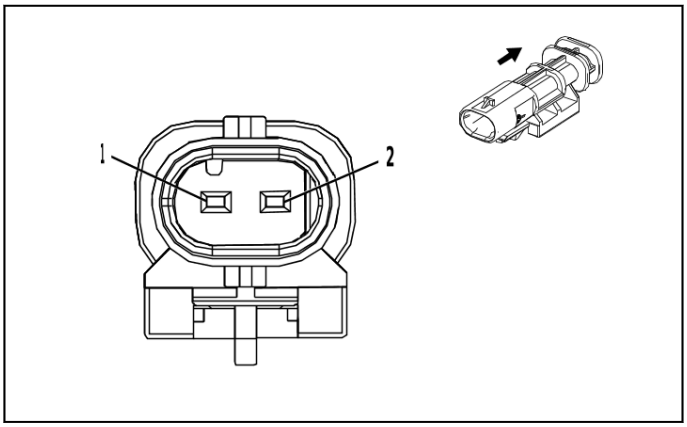

2474755

Connector Part Information

- Harness Type: Fuel Tank Filler Door Lock Release Wiring Harness
- OEM Connector: 1-2296694-1
- Service Connector: Service by Harness - See Part Catalog
- Description: 2-Way F 1.2 MCON Series, Sealed(BK)

Connector Part Information

- Harness Type: Body Wiring Harness
- OEM Connector: 2203314-1
- Service Connector: 85533165
- Description: 2-Way M 1.2 MCON Series, Sealed(BK)

Terminal Part Information

Terminal Type ID	Terminated Lead	Diagnostic Test Probe	Terminal Removal Tool
I	Not required	J-35616-12 (BU)	No Tool Required
II	Not required	J-35616-17 (L-GN)	No Tool Required

X353 Fuel Tank Filler Door Lock Release Wiring Harness to Body Wiring Harness (N08)

Pin	Size	Color	Circuit	Terminal Type ID	Option	Function	Pin	Size	Color	Circuit	Terminal Type ID	Option
(1) 1	(1) 0.5	(1) BU / BK	(1) 2690	(1) I	(1) —	(1) Fuel Door Actuator Unlock Control	(1) 1	(1) 0.75	(1) WH	(1) 2679	(1) II	(1) —
(2) 2	(2) 0.5	(2) VT / GY	(2) 2683	(2) I	(2) —	(2) Unlatch Actuators Unlatch Low Reference 1	(2) 2	(2) 0.75	(2) BU	(2) 2689	(2) II	(2) —

X370A Headlining Trim Panel Harness to Instrument Panel Wiring Harness

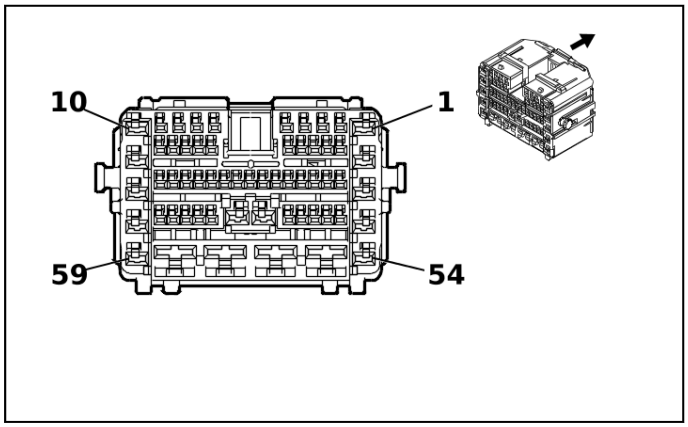

5278767

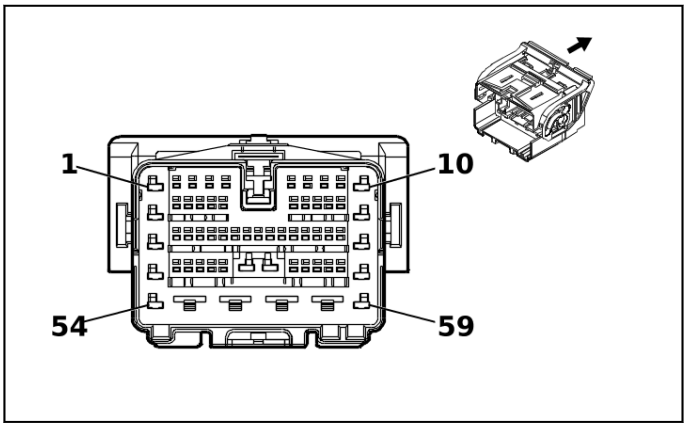

5278741

Connector Part Information
- Harness Type: Headlining Trim Panel Harness
- OEM Connector: 7289-7293-30
- Service Connector: 13528126
- Description: 59-Way F 1.2 MCON, 2.8, 6.3 YESC Series(BK)

Connector Part Information
- Harness Type: Instrument Panel Wiring Harness
- OEM Connector: 7288-7295-30
- Service Connector: 84766292
- Description: 59-Way M 1.2 MCON, 2.8, 6.3 YESC Series(BK)

Terminal Part Information

Terminal Type ID	Terminated Lead	Diagnostic Test Probe	Terminal Removal Tool
I	13575835	J-35616-42 (RD)	J-38125-11A
II	19331733	J-35616-12 (BU)	J-38125-553
III	85544080	J-35616-4A (PU)	J-38125-11A
IV	Service by Cable	J-35616-12 (BU)	J-38125-215A
V	13578908	J-35616-5 (PU)	J-38125-11A
VI	13580023	J-35616-43 (RD)	J-38125-11A
VII	19330704	J-35616-13 (BU)	J-38125-215A
VIII	Service by Cable	J-35616-13 (BU)	J-38125-215A

X370A Headlining Trim Panel Harness to Instrument Panel Wiring Harness

Pin	Size	Color	Circuit	Terminal Type ID	Option	Function	Pin	Size	Color	Circuit	Terminal Type ID	Option
(1) 1	(1) 2.5	(1) RD / BU	(1) 4540	(1) III	(1) —	(1) Battery Positive Voltage	(1) 1	(1) 2.5	(1) RD / BU	(1) 4540	(1) V	(1) —
(2) 2	(2) 0.35	(2) GN / WH	(2) 24	(2) II	(2) —	(2) Backup Lamp Control	(2) 2	(2) 0.5	(2) GN / WH	(2) 24	(2) VII	(2) —
3	—	—	—	—	—	Not Occupied	3	—	—	—	—	—
(4) 4	(4) 0.35	(4) BU	(4) 8579	(4) IV	(4) —	(4) Automotive Audio Bus A2B Serial Data 1 [-]	(4) 4	(4) 0.35	(4) GN	(4) 8579	(4) VIII	(4) —
(5) 5	(5) 0.35	(5) GN	(5) 8580	(5) IV	(5) —	(5) Automotive Audio Bus A2B Serial Data 1 [+]	(5) 5	(5) 0.35	(5) WH	(5) 8580	(5) VIII	(5) —

Pin	Size	Color	Circuit	Terminal Type ID	Option	Function	Pin	Size	Color	Circuit	Terminal Type ID	Option
(6) 6	(6) 0.35	(6) BN / WH	(6) 7209	(6) IV	(6) —	(6) Ethernet Bus 3 [+]	(6) 6	(6) 0.35	(6) BN / WH	(6) 7209	(6) VIII	(6) —
(7) 7	(7) 0.35	(7) BN	(7) 7208	(7) IV	(7) —	(7) Ethernet Bus 3 [-]	(7) 7	(7) 0.35	(7) BN	(7) 7208	(7) VIII	(7) —
8	—	—	—	—	—	Not Occupied	8	—	—	—	—	—
(9) 9	(9) 0.35	(9) BU / VT	(9) 8900	(9) II	(9) —	(9) Police Microphone Input Signal	(9) 9	(9) 0.5	(9) BU / VT	(9) 8900	(9) VII	(9) —
(10) 10	(10) 2.5	(10) BK	(10) 1850	(10) III	(10) —	(10) Ground	(10) 10	(10) 2.5	(10) BK	(10) 1050	(10) V	(10) —
(11) 11	(11) 0.5	(11) RD / YE	(11) 240	(11) III	(11) —	(11) Battery Positive Voltage	(11) 11	(11) 1	(11) RD / YE	(11) 240	(11) V	(11) —
(12) 12	(12) 0.35	(12) WH / GY	(12) 4104	(12) II	(12) —	(12) AUTOSAR CAN Bus [-] 8 Serial Data (12) AUTOSAR CAN Bus [-] 8 Serial Data	(12) 12	(12) 0.5 (12) 0.35	(12) WH / GY (12) WH / GY	(12) 4104 (12) 4104	(12) VII (12) VII	(12) - UKL (12) UKL
(13) 13	(13) 0.35	(13) BU / GY	(13) 4105	(13) II	(13) —	(13) AUTOSAR CAN Bus [+] 8 Serial Data (13) AUTOSAR CAN Bus [+] 8 Serial Data	(13) 13	(13) 0.5 (13) 0.35	(13) BU / GY (13) BU / GY	(13) 4105 (13) 4105	(13) VII (13) VII	(13) - UKL (13) UKL
14	—	—	—	—	—	Not Occupied	14	—	—	—	—	—
(15) 15	(15) 0.35	(15) GN	(15) 8580	(15) IV	(15) —	(15) Automotive Audio Bus A2B Serial Data 1 [+]	(15) 15	(15) 0.35	(15) WH	(15) 8580	(15) VIII	(15) —
(16) 16	(16) 0.35	(16) BU	(16) 8579	(16) IV	(16) —	(16) Automotive Audio Bus A2B Serial Data 1 [-]	(16) 16	(16) 0.35	(16) GN	(16) 8579	(16) VIII	(16) —
17 - 18	—	—	—	—	—	Not Occupied	17 - 18	—	—	—	—	—
(19) 19	(19) 0.35 (19) 0.35	(19) BU / WH (19) GN / BK	(19) 8899 (19) 10652	(19) II (19) II	(19) 5W4/9C1 (19) UG1	(19) Police Microphone Data Signal (19) Radio LIN Bus 1	(19) 19	(19) 0.5 (19) 0.35	(19) BU / WH (19) GN / BK	(19) 8899 (19) 10652	(19) VII (19) VII	(19) 5W4/9C1 (19) UG1
(20) 20	(20) 0.35	(20) WH	(20) 4978	(20) II	(20) —	(20) AUTOSAR CAN Bus [-] 2 Serial Data	(20) 20	(20) 0.35	(20) WH	(20) 4978	(20) VII	(20) —
(21) 21	(21) 0.35	(21) BU / YE	(21) 4979	(21) II	(21) —	(21) AUTOSAR CAN Bus [+] 2 Serial Data	(21) 21	(21) 0.35	(21) BU / YE	(21) 4979	(21) VII	(21) —
22 - 23	—	—	—	—	—	Not Occupied	22 - 23	—	—	—	—	—
(24) 24	(24) 0.35	(24) BU / YE	(24) 4979	(24) II	(24) —	(24) AUTOSAR CAN Bus [+] 2 Serial Data	(24) 24	(24) 0.5	(24) BU / YE	(24) 4979	(24) VII	(24) —

Pin	Size	Color	Circuit	Terminal Type ID	Option	Function	Pin	Size	Color	Circuit	Terminal Type ID	Option
(25) 25	(25) 0.35	(25) WH	(25) 49 78	(25) II	(25) —	(25) AUTOSAR CAN Bus [-] 2 Serial Data	(25) 25	(25) 0.5	(25) WH	(25) 49 78	(25) VII	(25) —
(26) 26	(26) 0.35	(26) YE / VT	(26) 25 16	(26) II	(26) —	(26) Telematics Switch Green LED Indicator Control	(26) 26	(26) 0.35	(26) YE / VT	(26) 25 16	(26) VII	(26) —
(27) 27	(27) 0.35	(27) GN / WH	(27) 25 14	(27) II	(27) —	(27) Telematics Switch Signal	(27) 27	(27) 0.35	(27) GN / WH	(27) 25 14	(27) VII	(27) —
(28) 28	(28) 0.35	(28) GN / BK	(28) 25 15	(28) II	(28) —	(28) Telematics Switch Supply Voltage	(28) 28	(28) 0.35	(28) GN / BK	(28) 25 15	(28) VII	(28) —
(29) 29	(29) 0.35	(29) BN / WH	(29) 25 17	(29) II	(29) —	(29) Telematics Switch Red LED Indicator Control	(29) 29	(29) 0.35	(29) BN / WH	(29) 25 17	(29) VII	(29) —
(30) 30	(30) 0.5 (30) 0.35	(30) BK / WH (30) BK / WH	(30) 18 51 (30) 18 51	(30) II (30) II	(30) - DRZ (30) DRZ	(30) Signal Ground (30) Signal Ground	(30) 30	(30) 0.35	(30) BK / WH	(30) 18 51	(30) VII	(30) —
(31) 31	(31) 0.35	(31) BK / YE	(31) 16 91	(31) II	(31) —	(31) Automatic Day/Night Mirror Low Reference	(31) 31	(31) 0.35	(31) BK / YE	(31) 16 91	(31) VII	(31) —
(32) 32	(32) 0.35	(32) YE / WH	(32) 16 90	(32) II	(32) —	(32) Mirror Dimming Signal	(32) 32	(32) 0.35	(32) YE / WH	(32) 16 90	(32) VII	(32) —
(33) 33	(33) 0.5	(33) GN / WH	(33) 41 15	(33) II	(33) —	(33) Body Control Module LIN Bus 5	(33) 33	(33) 0.35	(33) GN / WH	(33) 41 15	(33) VII	(33) —
(34) 34	(34) 0.35	(34) GN / WH	(34) 28 54	(34) II	(34) —	(34) Body Control Module LIN Bus 8	(34) 34	(34) 0.35	(34) GN / WH	(34) 28 54	(34) VII	(34) —
(35) 35	(35) 0.5	(35) BU	(35) 65 5	(35) II	(35) —	(35) Cellular Telephone Microphone Signal	(35) 35	(35) 0.35	(35) BU	(35) 65 5	(35) VII	(35) —
(36) 36	(36) 0.5	(36) BK / BN	(36) 65 4	(36) II	(36) —	(36) Cellular Telephone Microphone Low Reference	(36) 36	(36) 0.35	(36) BK / BN	(36) 65 4	(36) VII	(36) —
(37) 37	(37) 0.35	(37) BU / GY	(37) 41 05	(37) II	(37) —	(37) AUTOSAR CAN Bus [+] 8 Serial Data	(37) 37	(37) 0.35	(37) BU / GY	(37) 41 05	(37) VII	(37) —
(38) 38	(38) 0.35	(38) WH / GY	(38) 41 04	(38) II	(38) —	(38) AUTOSAR CAN Bus [-] 8 Serial Data	(38) 38	(38) 0.35	(38) WH / GY	(38) 41 04	(38) VII	(38) —
39 - 51	—	—	—	—	—	Not Occupied	39 - 51	—	—	—	—	—

Pin	Size	Color	Circuit	Terminal Type ID	Option	Function	Pin	Size	Color	Circuit	Terminal Type ID	Option
(52) 52	(52) —	(52) —	(52) —	(52) —	(52) —	(52) ADAS Compute Platform Communication Enable	(52) 52	(52) 0.5	(52) BN / WH	(52) 11 581	(52) VII	(52) —
53 - 54	—	—	—	—	—	Not Occupied	53 - 54	—	—	—	—	—
(55) 55	(55) 0.5	(55) BK	(55) 18 50	(55) I	(55) —	(55) Ground	(55) 55	(55) 0.5	(55) BK	(55) 10 50	(55) VI	(55) —
(56) 56	(56) —	(56) —	(56) —	(56) —	(56) —	(56) Ground	(56) 56	(56) 1.5	(56) BK	(56) 10 50	(56) VI	(56) —
57	—	—	—	—	—	Not Occupied	57	—	—	—	—	—
(58) 58	(58) 0.5	(58) VT / WH	(58) 23 9	(58) I	(58) —	(58) Run/ Crank Ignition 1 Voltage	(58) 58	(58) 0.5	(58) VT / WH	(58) 23 9	(58) VI	(58) —
59	—	—	—	—	—	Not Occupied	59	—	—	—	—	—

X370B Headlamp Automatic Control Ambient Light Sensor Wiring Harness to Headlining Trim Panel Harness

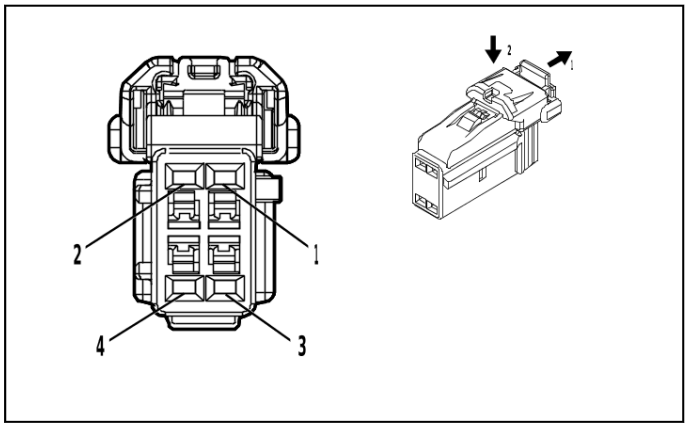

4872683

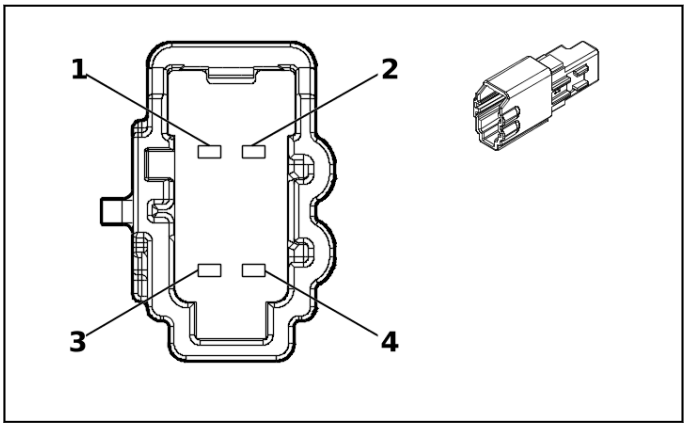

5360963

Connector Part Information
- Harness Type: Headlamp Automatic Control Ambient Light Sensor Wiring Harness
- OEM Connector: 6098-8435
- Service Connector: Service by Harness - See Part Catalog
- Description: 4-Way F 1.2 Series(BK)

Connector Part Information
- Harness Type: Headlining Trim Panel Harness
- OEM Connector: 6098-9046
- Service Connector: 84847258
- Description: 4-Way M 1.2 MCON Series(BK)

Terminal Part Information

Terminal Type ID	Terminated Lead	Diagnostic Test Probe	Terminal Removal Tool
I	Not required	J-35616-16 (L-GN)	No Tool Required
II	Not required	J-35616-17 (L-GN)	No Tool Required

X370B Headlamp Automatic Control Ambient Light Sensor Wiring Harness to Headlining Trim Panel Harness

Pin	Size	Color	Circuit	Terminal Type ID	Option	Function	Pin	Size	Color	Circuit	Terminal Type ID	Option
(1) 1	(1) 0.35	(1) RD / VT	(1) 240	(1) I	(1) —	(1) Battery Positive Voltage	(1) 1	(1) 0.5	(1) RD / YE	(1) 240	(1) II	(1) —
(2) 2	(2) 0.35	(2) GN / BN	(2) 4115	(2) I	(2) —	(2) Body Control Module LIN Bus 5	(2) 2	(2) 0.5	(2) GN / WH	(2) 4115	(2) II	(2) —
(3) 3	(3) 0.35	(3) BK	(3) 850	(3) I	(3) —	(3) Ground	(3) 3	(3) 0.5	(3) BK / WH	(3) 1851	(3) II	(3) —
4	—	—	—	—	—	Not Occupied	4	—	—	—	—	—

X371 Headlining Trim Panel Harness to Instrument Panel Wiring Harness

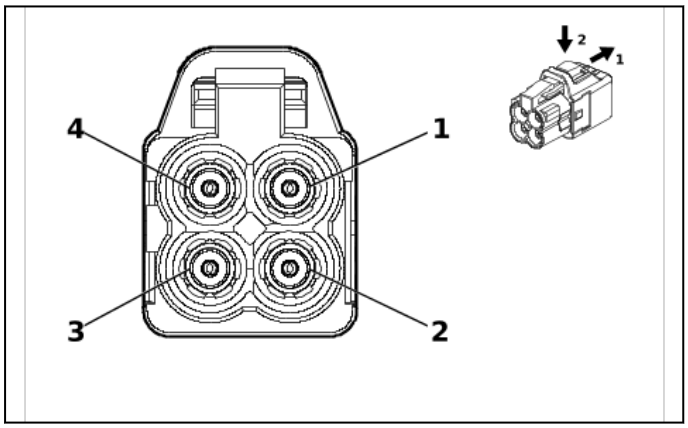

5835118

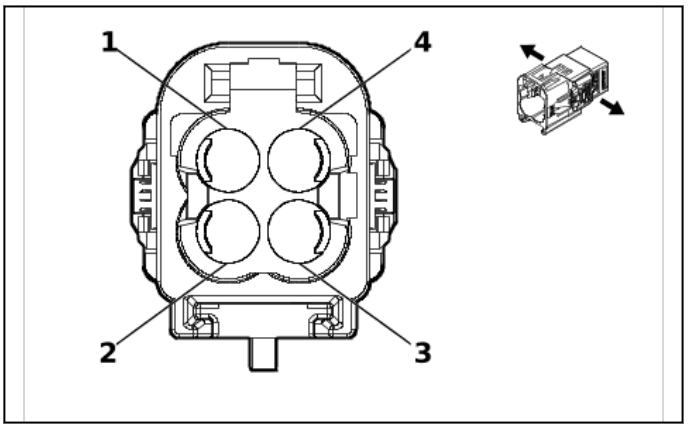

5834856

Connector Part Information
- Harness Type: Headlining Trim Panel Harness COAX
- OEM Connector: 35520546
- Service Connector: Service by Cable Assembly — See Part Catalog
- Description: 4-Way F Mini Coax Type(BK)

Connector Part Information
- Harness Type: Instrument Panel Wiring Harness COAX
- OEM Connector: AMZ040-C00-A
- Service Connector: Service by Cable Assembly — See Part Catalog
- Description: 4-Way M Mini Coax Type(BK)

Terminal Part Information

Terminal Type ID	Terminated Lead	Diagnostic Test Probe	Terminal Removal Tool
I	Not required	No Tool Required	No Tool Required

X371 Headlining Trim Panel Harness to Instrument Panel Wiring Harness

Pin	Size	Color	Circuit	Terminal Type ID	Option	Function	Pin	Size	Color	Circuit	Terminal Type ID	Option
1	—	—	—	—	—	Not Occupied	1	—	—	—	—	—
(2) 2	(2) 0.4	(2) Coax Cable	(2) 10648	(2) I	(2) —	(2) Interior Vision Cabin Camera LVDS (Low Voltage Differential Signaling) Coaxial Signal	(2) 2	(2) 0.4	(2) Coax Cable	(2) 10648	(2) II	(2) —
3 - 4	—	—	—	—	—	Not Occupied	3 - 4	—	—	—	—	—

X372 Headlining Trim Panel Harness to Police Accessories Wiring Harness (5W4 / 9C1)

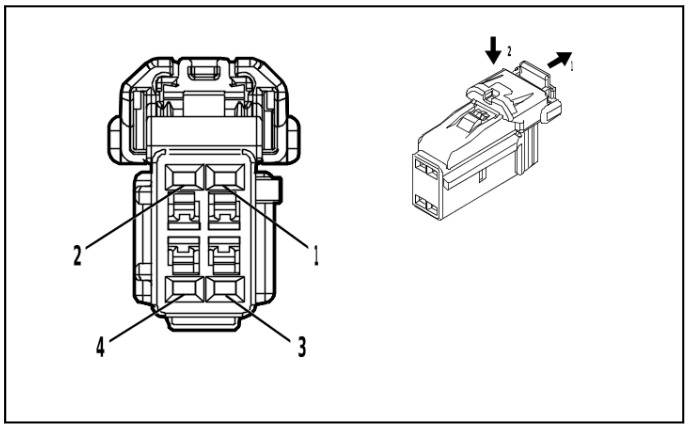

4872683

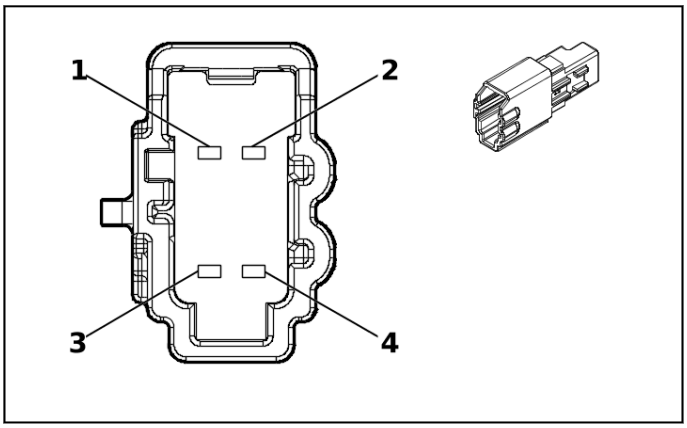

5360963

Connector Part Information
- Harness Type: Headlining Trim Panel Harness
- OEM Connector: 6098-8435
- Service Connector: 19369633
- Description: 4-Way F 1.2 Series(BK)

Connector Part Information
- Harness Type: Police Accessories Wiring Harness
- OEM Connector: Not Available
- Service Connector: Service by Harness - See Part Catalog
- Description: 4-Way M (BK)

Terminal Part Information

Terminal Type ID	Terminated Lead	Diagnostic Test Probe	Terminal Removal Tool
I	Not required	J-35616-12 (BU)	No Tool Required
II	Not required	No Tool Required	No Tool Required

X372 Headlining Trim Panel Harness to Police Accessories Wiring Harness (5W4 / 9C1)

Pin	Size	Color	Circuit	Terminal Type ID	Option	Function	Pin	Size	Color	Circuit	Terminal Type ID	Option
(1) 1	(1) 0.35	(1) BK	(1) 1850	(1) I	(1) —	(1) Ground	(1) 1	(1) 0.35	(1) BK	(1) 1850	(1) II	(1) —
(2) 2	(2) 0.35	(2) BU / WH	(2) 8899	(2) I	(2) —	(2) Police Microphone Data Signal	(2) 2	(2) 0.35	(2) BU / WH	(2) 8899	(2) II	(2) —

Pin	Size	Color	Circuit	Terminal Type ID	Option	Function	Pin	Size	Color	Circuit	Terminal Type ID	Option
(3) 3	(3) 0.35	(3) BU / VT	(3) 8900	(3) I	(3) —	(3) Police Microphone Input Signal	(3) 3	(3) 0.35	(3) BU / VT	(3) 8900	(3) II	(3) —
4	—	—	—	—	—	Not Occupied	4	—	—	—	—	—

X375 Sunroof Wiring Harness to Headlining Trim Panel Harness (C3U)

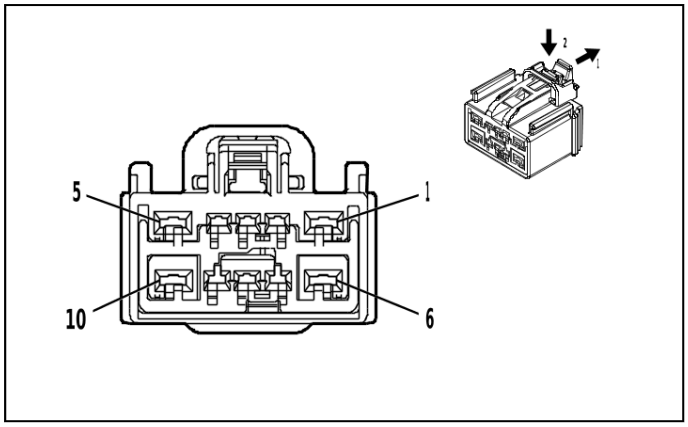

5020939

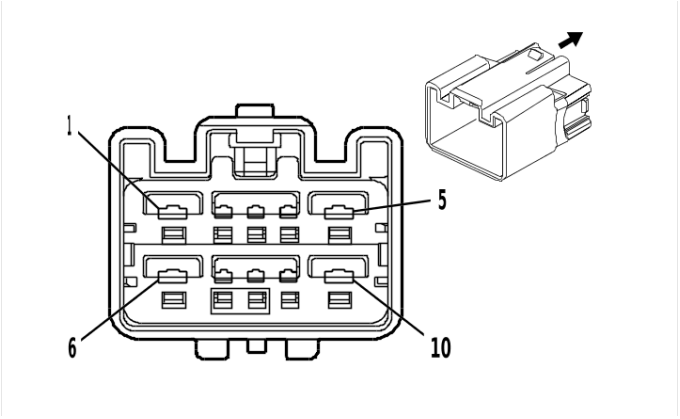

1851890

Connector Part Information
- Harness Type: Sunroof Wiring Harness
- OEM Connector: 7289-9153-40
- Service Connector: Service by Harness - See Part Catalog
- Description: 10-Way F 1.5, 2.8 Kaizen Series(L-GY)

Connector Part Information
- Harness Type: Headlining Trim Panel Harness
- OEM Connector: 7282-6459-40
- Service Connector: 89047070
- Description: 10-Way M 1.5, 2.8 Kaizen Series(L-GY)

Terminal Part Information

Terminal Type ID	Terminated Lead	Diagnostic Test Probe	Terminal Removal Tool
I	Not required	J-35616-4A (PU)	No Tool Required
II	13578907	J-35616-3 (GY)	J-38125-215A
III	13578908	J-35616-5 (PU)	J-38125-11A

X375 Sunroof Wiring Harness to Headlining Trim Panel Harness (C3U)

Pin	Size	Color	Circuit	Terminal Type ID	Option	Function	Pin	Size	Color	Circuit	Terminal Type ID	Option
(1) 1	(1) 3	(1) RD	(1) 4540	(1) I	(1) —	(1) Battery Positive Voltage	(1) 1	(1) 2.5	(1) RD / BU	(1) 4540	(1) III	(1) —
2 - 4	—	—	—	—	—	Not Occupied	2 - 4	—	—	—	—	—
(5) 5	(5) 3	(5) BK	(5) 1850	(5) I	(5) —	(5) Ground	(5) 5	(5) 2.5	(5) BK	(5) 1850	(5) III	(5) —
6	—	—	—	—	—	Not Occupied	6	—	—	—	—	—
(7) 7	(7) 0.35	(7) BU	(7) 2854	(7) I	(7) —	(7) Body Control Module LIN Bus 8	(7) 7	(7) 0.35	(7) GN / WH	(7) 2854	(7) II	(7) —
8 - 10	—	—	—	—	—	Not Occupied	8 - 10	—	—	—	—	—

X385 Headlining Trim Panel Harness to Police Accessories Wiring Harness (5W4 / 9C1)

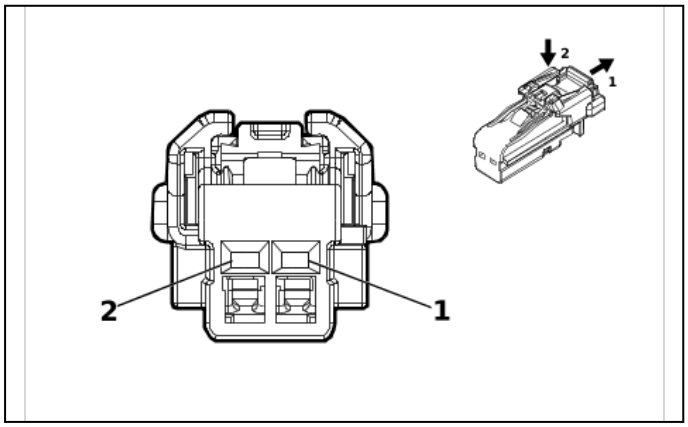

4115691

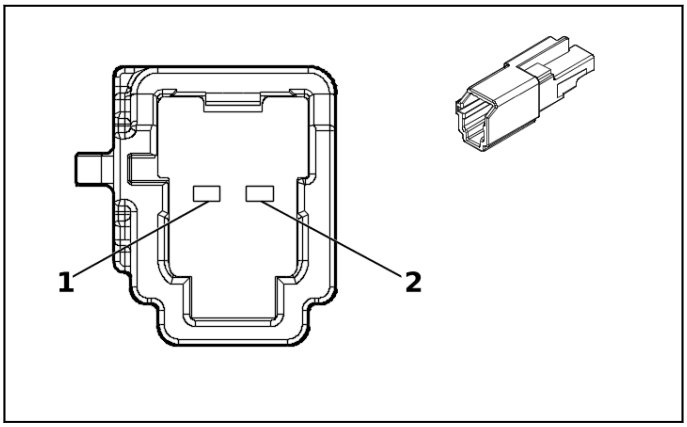

5355341

Connector Part Information
- Harness Type: Headlining Trim Panel Harness
- OEM Connector: 6098-8988
- Service Connector: 87816612
- Description: 2-Way F 1.2 MCON Series(BK)

Connector Part Information
- Harness Type: Police Accessories Wiring Harness
- OEM Connector: Not Available
- Service Connector: Service by Harness - See Part Catalog
- Description: 2-Way M (BK)

Terminal Part Information

Terminal Type ID	Terminated Lead	Diagnostic Test Probe	Terminal Removal Tool
I	Not required	J-35616-16 (L-GN)	No Tool Required
II	Not required	No Tool Required	No Tool Required

X385 Headlining Trim Panel Harness to Police Accessories Wiring Harness (5W4 / 9C1)

Pin	Size	Color	Circuit	Terminal Type ID	Option	Function	Pin	Size	Color	Circuit	Terminal Type ID	Option
(1) 1	(1) 0.5	(1) BK	(1) 1850	(1) I	(1) —	(1) Ground	(1) 1	(1) 0.5	(1) BK	(1) 1850	(1) II	(1) —
(2) 2	(2) 0.5	(2) RD / YE	(2) 240	(2) I	(2) —	(2) Battery Positive Voltage	(2) 2	(2) 0.5	(2) RD / YE	(2) 240	(2) II	(2) —

X396 Instrument Panel Wiring Harness to Antenna Wiring Harness

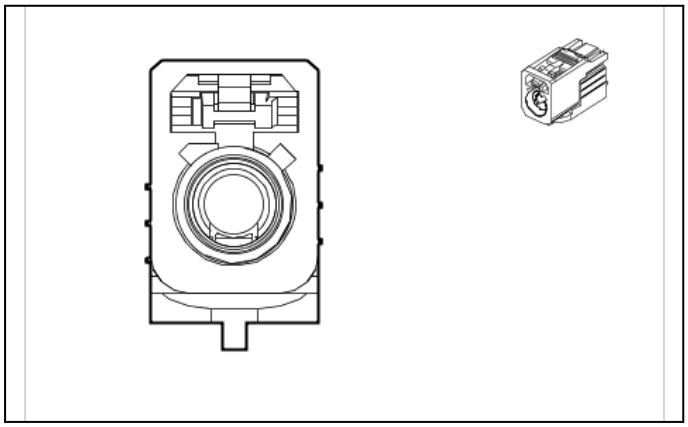

5633209

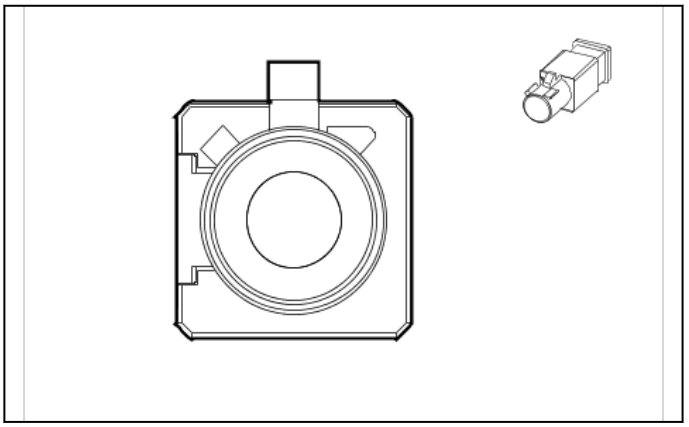

6410256

Connector Part Information

- Harness Type: Instrument Panel Wiring Harness COAX
- OEM Connector: 33351010
- Service Connector: Service by Cable Assembly — See Part Catalog
- Description: 1-Way F Coax Type(BK)

Connector Part Information

- Harness Type: Antenna Wiring Harness COAX
- OEM Connector: Not Available
- Service Connector: Service by Cable Assembly — See Part Catalog
- Description: 1-Way M (BK)

Terminal Part Information

Terminal Type ID	Terminated Lead	Diagnostic Test Probe	Terminal Removal Tool
I	Not required	No Tool Required	No Tool Required

X396 Instrument Panel Wiring Harness to Antenna Wiring Harness

Pin	Size	Color	Circuit	Terminal Type ID	Option	Function	Pin	Size	Color	Circuit	Terminal Type ID	Option
—	—	Coax Cable	—	I	—	(AM/FM) Antenna RF Signal	—	—	Coax Cable	—	I	—

X397 Instrument Panel Wiring Harness to Antenna Wiring Harness (U2Q)

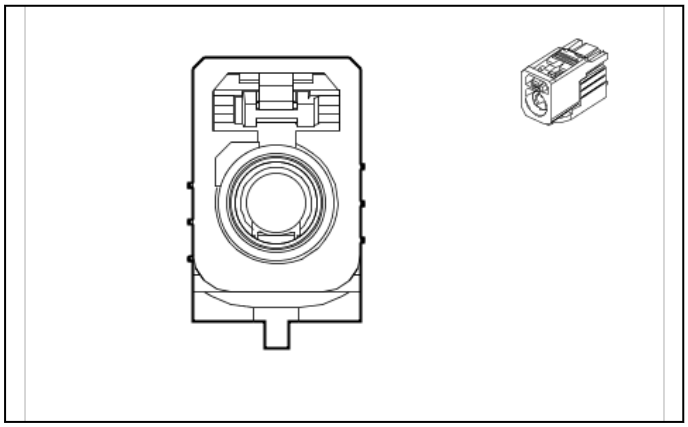

5633912

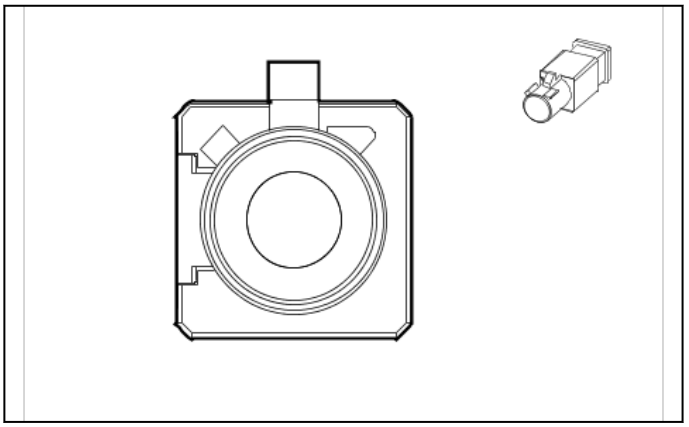

6410256

Connector Part Information

- Harness Type: Instrument Panel Wiring Harness COAX
- OEM Connector: 33351016
- Service Connector: Service by Cable Assembly — See Part Catalog
- Description: 1-Way F Coax Type(GN)

Connector Part Information

- Harness Type: Antenna Wiring Harness COAX
- OEM Connector: Not Available
- Service Connector: Service by Cable Assembly — See Part Catalog
- Description: 1-Way M (GN)

Terminal Part Information

Terminal Type ID	Terminated Lead	Diagnostic Test Probe	Terminal Removal Tool
I	Not required	No Tool Required	No Tool Required

X397 Instrument Panel Wiring Harness to Antenna Wiring Harness (U2Q)

Pin	Size	Color	Circuit	Terminal Type ID	Option	Function	Pin	Size	Color	Circuit	Terminal Type ID	Option
—	—	Coax Cable	—	I	—	(DAB/DMB) Coaxial Antenna DAB Signal	—	—	Coax Cable	—	I	—

X400 Chassis Wiring Harness to Body Wiring Harness

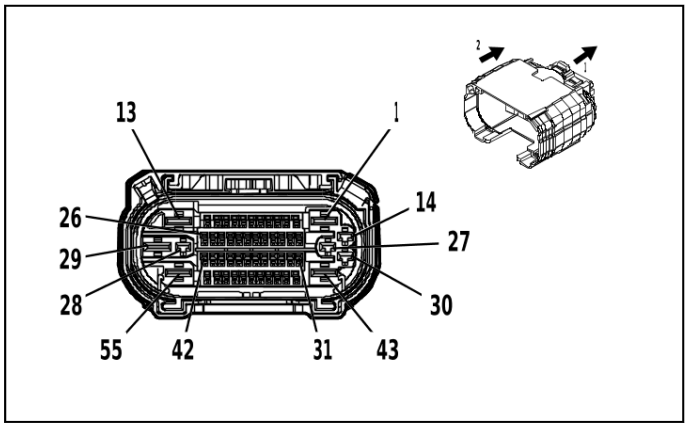

4992168

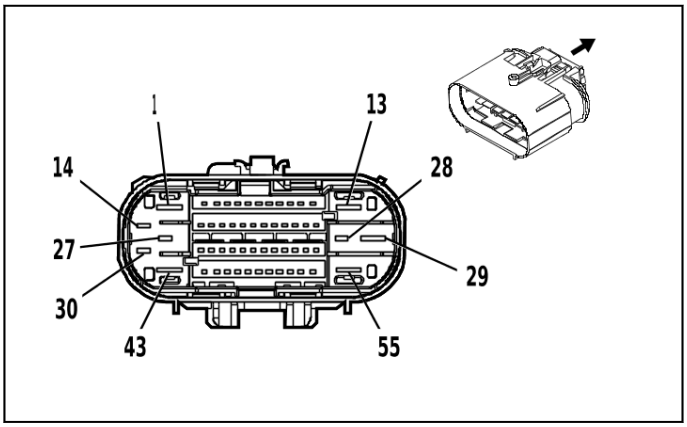

4993301

Connector Part Information

- Harness Type: Chassis Wiring Harness
- OEM Connector: 35016652
- Service Connector: 19371185
- Description: 55-Way F 1.2 OCS, 2.8, 6.3 CTS Series, Sealed(BK)

Connector Part Information

- Harness Type: Body Wiring Harness
- OEM Connector: 35205173
- Service Connector: 84727364
- Description: 55-Way M 1.2 OCS, 2.8, 6.3 CTS Series, Sealed(BK)

Terminal Part Information

Terminal Type ID	Terminated Lead	Diagnostic Test Probe	Terminal Removal Tool
I	19332901	J-35616-35 (VT)	J-38125-212
II	19370818	J-35616-12 (BU)	J-38125-215A
III	19371217	J-35616-12 (BU)	J-38125-215A
IV	84634921	J-35616-42 (RD)	J-38125-212
V	84847992	J-35616-32 (OG)	J-38125-36
VI	84867140	J-35616-13 (BU)	J-38125-215A
VII	84992391	J-35616-5 (PU)	J-38125-36

X400 Chassis Wiring Harness to Body Wiring Harness

Pin	Size	Color	Circuit	Terminal Type ID	Option	Function	Pin	Size	Color	Circuit	Terminal Type ID	Option
(1) 1	(1) 4	(1) GN / VT	(1) 1988	(1) IV	(1) —	(1) Right Park Brake Motor Apply Control	(1) 1	(1) 2.5	(1) GN / VT	(1) 1988	(1) V	(1) —
(2) 2	(2) 0.75	(2) GN / BU	(2) 2733	(2) II	(2) —	(2) Brake System Control Module LIN Bus 2	(2) 2	(2) 0.75	(2) GN / BU	(2) 2733	(2) VI	(2) —
(3) 3	(3) 0.5	(3) BU / GY	(3) 4054	(3) II	(3) —	(3) Private Serial Data Powertrain CAN Bus [-] Serial Data	(3) 3	(3) 0.35	(3) BU / GY	(3) 4054	(3) VI	(3) —
(4) 4	(4) 0.5	(4) WH	(4) 4055	(4) II	(4) —	(4) Private Serial Data Powertrain CAN Bus [+] Serial Data	(4) 4	(4) 0.35	(4) WH	(4) 4055	(4) VI	(4) —
5 - 7	—	—	—	—	—	Not Occupied	5 - 7	—	—	—	—	—

Pin	Size	Color	Circuit	Terminal Type ID	Option	Function	Pin	Size	Color	Circuit	Terminal Type ID	Option
(8) 8	(8) 0.5	(8) BU / WH	(8) 7978	(8) II	(8) —	(8) Axle Differential Lock Motor Temperature Sensor Signal	(8) 8	(8) 0.5	(8) BU / WH	(8) 7978	(8) VI	(8) —
(9) 9	(9) 0.5 (9) 0.5	(9) BU (9) BU / WH	(9) 4987 (9) 4987	(9) II (9) II	(9) — (9) —	(9) AUTOSAR CAN Bus [+] 1 Serial Data (9) AUTOSAR CAN Bus [+] 1 Serial Data	(9) 9	(9) 0.5	(9) BU	(9) 4987	(9) VI	(9) —
(10) 10	(10) 0.5 (10) 0.5	(10) WH (10) WH / VT	(10) 4986 (10) 4986	(10) II (10) II	(10) — (10) —	(10) AUTOSAR CAN Bus [-] 1 Serial Data (10) AUTOSAR CAN Bus [-] 1 Serial Data	(10) 10	(10) 0.5	(10) WH	(10) 4986	(10) VI	(10) —
(11) 11	(11) 0.75	(11) GN / YE	(11) 1616	(11) II	(11) —	(11) Rear Brake Pad Wear Sensor Signal	(11) 11	(11) 0.75	(11) GN / YE	(11) 1616	(11) VI	(11) —
(12) 12	(12) 0.75	(12) BN / BU	(12) 1602	(12) II	(12) —	(12) Front Brake Pad Wear Sensor Signal	(12) 12	(12) 0.75	(12) BN / BU	(12) 1602	(12) VI	(12) —
(13) 13	(13) 4	(13) WH	(13) 2001	(13) IV	(13) —	(13) Left Park Brake Motor Apply Control	(13) 13	(13) 2.5	(13) WH	(13) 2001	(13) V	(13) —
(14) 14	(14) 2.5	(14) RD / VT	(14) 1242	(14) I	(14) —	(14) Battery Positive Voltage	(14) 14	(14) 2.5	(14) RD / VT	(14) 1242	(14) VII	(14) —
15 - 20	—	—	—	—	—	Not Occupied	15 - 20	—	—	—	—	—
(21) 21	(21) 0.5	(21) WH	(21) 4976	(21) II	(21) —	(21) AUTOSAR CAN Bus [-] 3 Serial Data	(21) 21	(21) 0.5	(21) WH	(21) 4976	(21) VI	(21) —
(22) 22	(22) 0.5	(22) BU / BK	(22) 4977	(22) II	(22) —	(22) AUTOSAR CAN Bus [+] 3 Serial Data	(22) 22	(22) 0.5	(22) BU / BK	(22) 4977	(22) VI	(22) —
(23) 23	(23) 0.75	(23) WH / RD	(23) 7973	(23) II	(23) —	(23) Axle Differential Lock Motor Position Sensor High Reference	(23) 23	(23) 0.75	(23) WH / RD	(23) 7973	(23) VI	(23) —
(24) 24	(24) 0.5	(24) BU / VT	(24) 4101	(24) II	(24) —	(24) AUTOSAR CAN Bus [+] 4 Serial Data	(24) 24	(24) 0.35	(24) BU / VT	(24) 4101	(24) VI	(24) —
(25) 25	(25) 0.5	(25) WH	(25) 4100	(25) II	(25) —	(25) AUTOSAR CAN Bus [-] 4 Serial Data	(25) 25	(25) 0.35	(25) WH	(25) 4100	(25) VI	(25) —
(26) 26	(26) 0.5	(26) BK	(26) 7970	(26) II	(26) —	(26) Axle Differential Lock Control Shield	(26) 26	(26) 0.5	(26) BK	(26) 7970	(26) VI	(26) —

Pin	Size	Color	Circuit	Terminal Type ID	Option	Function	Pin	Size	Color	Circuit	Terminal Type ID	Option
(27) 27	(27) —	(27) —	(27) —	(27) —	(27) —	(27) Ground	(27) 27	(27) 2.5	(27) BK	(27) 150	(27) VII	(27) —
(28) 28	(28) 2.5	(28) GY / BN	(28) 7968	(28) I	(28) —	(28) Axle Differential Lock Control High	(28) 28	(28) 2.5	(28) GY / BN	(28) 7968	(28) VII	(28) —
(29) 29	(29) 4	(29) GY / BK	(29) 4369	(29) IV	(29) —	(29) Left Park Brake Motor Low Reference	(29) 29	(29) 2.5	(29) GY / BK	(29) 4369	(29) V	(29) —
(30) 30	(30) 2.5	(30) YE / WH	(30) 7969	(30) I	(30) —	(30) Axle Differential Lock Control Low	(30) 30	(30) 2.5	(30) YE / WH	(30) 7969	(30) VII	(30) —
(31) 31	(31) 0.5	(31) GN / BN	(31) 7975	(31) II	(31) —	(31) Axle Differential Lock Motor Position Sensor Signal 1	(31) 31	(31) 0.5	(31) GN / BN	(31) 7975	(31) VI	(31) —
(32) 32	(32) 0.5	(32) GY	(32) 7976	(32) II	(32) —	(32) Axle Differential Lock Motor Position Sensor Signal 2	(32) 32	(32) 0.5	(32) GY	(32) 7976	(32) VI	(32) —
(33) 33	(33) 0.5	(33) YE	(33) 872	(33) II	(33) —	(33) Right Front Wheel Speed Sensor Signal	(33) 33	(33) 0.5	(33) YE	(33) 872	(33) VI	(33) —
(34) 34	(34) 0.5	(34) GY / BN	(34) 7065	(34) II	(34) —	(34) Right Front Wheel Speed Sensor Control	(34) 34	(34) 0.5	(34) GY / BN	(34) 7065	(34) VI	(34) —
(35) 35	(35) 0.75	(35) VT / BK	(35) 7972	(35) II	(35) —	(35) Axle Differential Lock Motor Brake Control Low	(35) 35	(35) 0.75	(35) VT / BK	(35) 7972	(35) VI	(35) —
(36) 36	(36) 0.75	(36) WH	(36) 7971	(36) II	(36) —	(36) Axle Differential Lock Motor Brake Control High	(36) 36	(36) 0.75	(36) WH	(36) 7971	(36) VI	(36) —
(37) 37	(37) 0.5	(37) GY	(37) 830	(37) II	(37) —	(37) Left Front Wheel Speed Sensor Signal	(37) 37	(37) 0.5	(37) GY	(37) 830	(37) VI	(37) —
(38) 38	(38) 0.5	(38) GY / WH	(38) 7064	(38) II	(38) —	(38) Left Front Wheel Speed Sensor Control	(38) 38	(38) 0.5	(38) GY / WH	(38) 7064	(38) VI	(38) —
(39) 39	(39) 0.5	(39) WH	(39) 4978	(39) II	(39) —	(39) AUTOSAR CAN Bus [-] 2 Serial Data	(39) 39	(39) 0.35	(39) WH	(39) 4978	(39) VI	(39) —

Pin	Size	Color	Circuit	Terminal Type ID	Option	Function	Pin	Size	Color	Circuit	Terminal Type ID	Option
(40) 40	(40) 0.5	(40) BK / YE	(40) 79 77	(40) II	(40) —	(40) Axle Differential Lock Motor Temperature Sensor Low Reference	(40) 40	(40) 0.5	(40) BK / YE	(40) 79 77	(40) VI	(40) —
(41) 41	(41) 0.5	(41) BU	(41) 49 87	(41) II	(41) —	(41) AUTOSAR CAN Bus [+] 1 Serial Data	(41) 41	(41) 0.5	(41) BU	(41) 49 87	(41) VI	(41) —
(42) 42	(42) 0.5	(42) WH	(42) 49 86	(42) II	(42) —	(42) AUTOSAR CAN Bus [-] 1 Serial Data	(42) 42	(42) 0.5	(42) WH	(42) 49 86	(42) VI	(42) —
(43) 43	(43) 4	(43) GY	(43) 43 68	(43) IV	(43) —	(43) Right Park Brake Motor Low Reference	(43) 43	(43) 2.5	(43) GY	(43) 43 68	(43) V	(43) —
(44) 44	(44) 1.5	(44) WH / BK	(44) 22 23	(44) III	(44) —	(44) Trailer Brake Apply Signal	(44) 44	(44) 0.75	(44) WH / BK	(44) 22 23	(44) VI	(44) —
(45) 45	(45) 0.5	(45) BK / VT	(45) 79 74	(45) II	(45) —	(45) Axle Differential Lock Motor Position Sensor Low Reference	(45) 45	(45) 0.5	(45) BK / VT	(45) 79 74	(45) VI	(45) —
(46) 46	(46) 0.5	(46) GY / BK	(46) 71 27	(46) II	(46) —	(46) Left Rear Wheel Speed Sensor Control	(46) 46	(46) 0.5	(46) GY / BK	(46) 71 27	(46) VI	(46) —
(47) 47	(47) 0.5	(47) BU	(47) 88 4	(47) II	(47) —	(47) Left Rear Wheel Speed Sensor Signal	(47) 47	(47) 0.5	(47) BU	(47) 88 4	(47) VI	(47) —
(48) 48	(48) 0.5	(48) WH	(48) 41 00	(48) II	(48) —	(48) AUTOSAR CAN Bus [-] 4 Serial Data	(48) 48	(48) 0.5	(48) WH	(48) 41 00	(48) VI	(48) —
(49) 49	(49) 0.5	(49) BU / VT	(49) 41 01	(49) II	(49) —	(49) AUTOSAR CAN Bus [+] 4 Serial Data	(49) 49	(49) 0.5	(49) BU / VT	(49) 41 01	(49) VI	(49) —
(50) 50	(50) 0.5	(50) VT / GN	(50) 43 20	(50) II	(50) —	(50) Powertrain Sensor Bus Enable	(50) 50	(50) 0.35	(50) VT / GN	(50) 43 20	(50) VI	(50) —
(51) 51	(51) 0.5	(51) GY / YE	(51) 71 28	(51) II	(51) —	(51) Right Rear Wheel Speed Sensor Control	(51) 51	(51) 0.5	(51) GY / YE	(51) 71 28	(51) VI	(51) —
(52) 52	(52) 0.5	(52) VT	(52) 88 2	(52) II	(52) —	(52) Right Rear Wheel Speed Sensor Signal	(52) 52	(52) 0.5	(52) VT	(52) 88 2	(52) VI	(52) —
(53) 53	(53) 0.5	(53) BU / YE	(53) 49 79	(53) II	(53) —	(53) AUTOSAR CAN Bus [+] 2 Serial Data	(53) 53	(53) 0.35	(53) BU / YE	(53) 49 79	(53) VI	(53) —

Pin	Size	Color	Circuit	Terminal Type ID	Option	Function	Pin	Size	Color	Circuit	Terminal Type ID	Option
(54) 54	(54) 1.5	(54) YE / BK	(54) 2224	(54) III	(54) —	(54) Trailer Brake Enable Signal	(54) 54	(54) 0.75	(54) YE / BK	(54) 2224	(54) VI	(54) —
(55) 55	(55) —	(55) —	(55) —	(55) —	(55) —	(55) Battery Positive Voltage	(55) 55	(55) 4	(55) RD / YE	(55) 442	(55) V	(55) —

X402 Chassis Wiring Harness to Body Wiring Harness

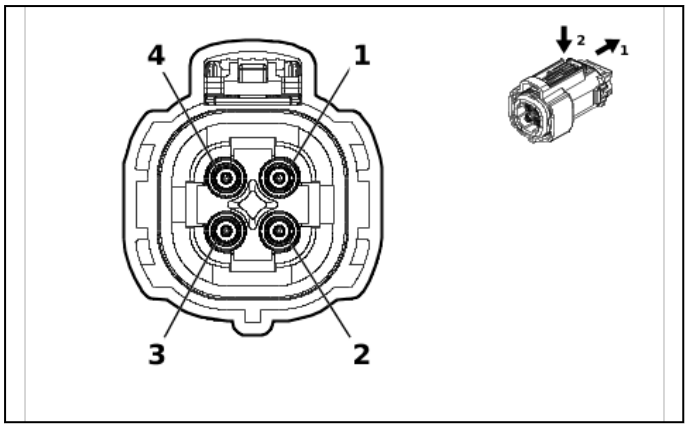

6640687

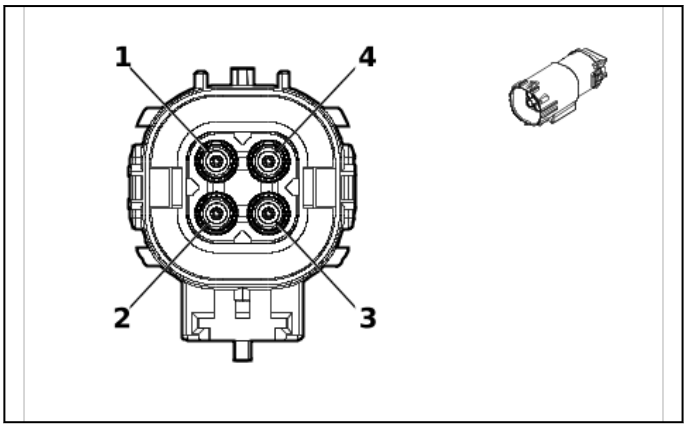

6642979

Connector Part Information
- Harness Type: Chassis Wiring Harness COAX
- OEM Connector: 35604224
- Service Connector: Service by Cable Assembly — See Part Catalog
- Description: 4-Way F Mini Coax Type(BN)

Connector Part Information
- Harness Type: Body Wiring Harness COAX
- OEM Connector: 35802169
- Service Connector: Service by Cable Assembly — See Part Catalog
- Description: 4-Way M Mini Coax Type(BN)

Terminal Part Information

Terminal Type ID	Terminated Lead	Diagnostic Test Probe	Terminal Removal Tool
I	Not required	No Tool Required	No Tool Required

X402 Chassis Wiring Harness to Body Wiring Harness

Pin	Size	Color	Circuit	Terminal Type ID	Option	Function	Pin	Size	Color	Circuit	Terminal Type ID	Option
(1) 1	(1) 0.4	(1) Coax Cable	(1) 2421	(1) I	(1) —	(1) Trailer Rear Vision Camera LVDS (Low Voltage Differential Signaling) Coaxial Signal	(1) 1	(1) 0.4	(1) Coax Cable	(1) 2421	(1) II	(1) —
(2) 2	(2) 0.4	(2) Coax Cable	(2) 7886	(2) I	(2) —	(2) Trailer 2 Rear Vision Camera LVDS (Low Voltage Differential Signaling) Coaxial Signal	(2) 2	(2) 0.4	(2) Coax Cable	(2) 7886	(2) II	(2) —

X403 Engine Wiring Harness to Chassis Wiring Harness (L84 / L87)

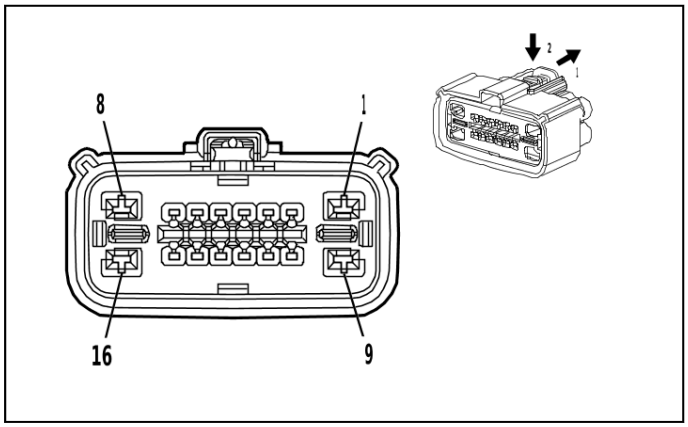

4283035

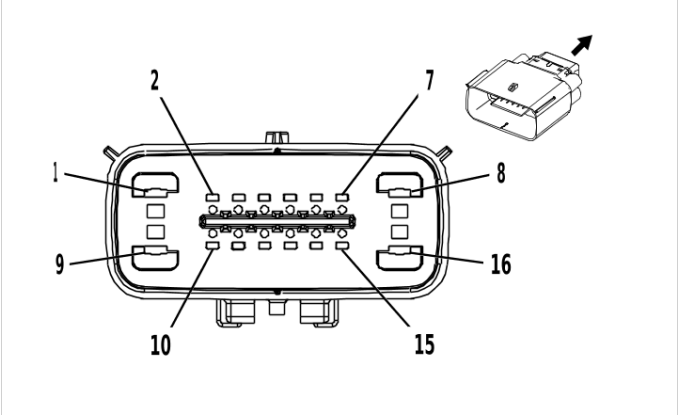

2373686

Connector Part Information
- Harness Type: Engine Wiring Harness
- OEM Connector: 34985-4142
- Service Connector: 19352906
- Description: 16-Way F 1.5, 2.8 MX Series, Sealed(BK)

Connector Part Information
- Harness Type: Chassis Wiring Harness
- OEM Connector: 34986-1601
- Service Connector: 19331031
- Description: 16-Way M 1.5, 2.8 MX Series, Sealed(BK)

Terminal Part Information

Terminal Type ID	Terminated Lead	Diagnostic Test Probe	Terminal Removal Tool
I	13576377	J-35616-35 (VT)	J-38125-12A
II	85528055	J-35616-2A (GY)	J-38125-217
III	19366658	J-35616-5 (PU)	J-38125-12A
IV	86800300	J-35616-3 (GY)	J-38125-217

X403 Engine Wiring Harness to Chassis Wiring Harness (L84 / L87)

Pin	Size	Color	Circuit	Terminal Type ID	Option	Function	Pin	Size	Color	Circuit	Terminal Type ID	Option
1 - 2	—	—	—	—	—	Not Occupied	1 - 2	—	—	—	—	—
(3) 3	(3) 0.5	(3) GN / GY	(3) 465	(3) II	(3) —	(3) Fuel Pump Primary Relay Control	(3) 3	(3) 0.5	(3) GN / GY	(3) 465	(3) IV	(3) —
4	—	—	—	—	—	Not Occupied	4	—	—	—	—	—
(5) 5	(5) 0.5	(5) WH	(5) 4976	(5) II	(5) —	(5) AUTOSAR CAN Bus [-] 3 Serial Data	(5) 5	(5) 0.5	(5) WH	(5) 4976	(5) IV	(5) —
(6) 6	(6) 0.5	(6) BU / BK	(6) 4977	(6) II	(6) —	(6) AUTOSAR CAN Bus [+] 3 Serial Data	(6) 6	(6) 0.5	(6) BU / BK	(6) 4977	(6) IV	(6) —
7	—	—	—	—	—	Not Occupied	7	—	—	—	—	—
(8) 8	(8) 2.5	(8) BU	(8) 47	(8) I	(8) —	(8) Trailer Auxiliary Control	(8) 8	(8) 2.5	(8) BU	(8) 47	(8) III	(8) —
9 - 10	—	—	—	—	—	Not Occupied	9 - 10	—	—	—	—	—

Pin	Size	Color	Circuit	Terminal Type ID	Option	Function	Pin	Size	Color	Circuit	Terminal Type ID	Option
(11) 11	(11) 0.75	(11) B N / YE	(11) 82 0	(11) II	(11) —	(11) Center High Mounted Stop Lamp Supply Volt-age	(11) 11	(11) 0.75	(11) B N / YE	(11) 82 0	(11) IV	(11) —
12	—	—	—	—	—	Not Occupied	12	—	—	—	—	—
(13) 13	(13) 0.5	(13) WH	(13) 49 78	(13) II	(13) —	(13) AUTOSA R CAN Bus [-] 2 Serial Data	(13) 13	(13) 0.5	(13) WH	(13) 49 78	(13) IV	(13) —
(14) 14	(14) 0.5	(14) B U / YE	(14) 49 79	(14) II	(14) —	(14) AUTOSA R CAN Bus [+] 2 Serial Data	(14) 14	(14) 0.5	(14) B U / YE	(14) 49 79	(14) IV	(14) —
15	—	—	—	—	—	Not Occupied	15	—	—	—	—	—
(16) 16	(16) 0.5	(16) V T / GN	(16) 43 20	(16) I	(16) —	(16) Powertra in Sensor Bus Enable (16) Powertra in Sensor Bus Enable	(16) 16	(16) 1 (16) 0.5	(16) V T / GN (16) V T / GN	(16) 43 20 (16) 43 20	(16) III (16) III	(16) L3B (16) L84 / L87

X403 Engine Wiring Harness to Chassis Wiring Harness (LZ0)

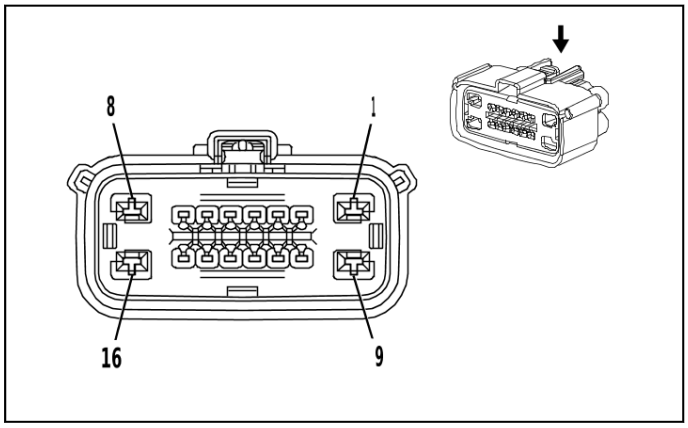

3684497

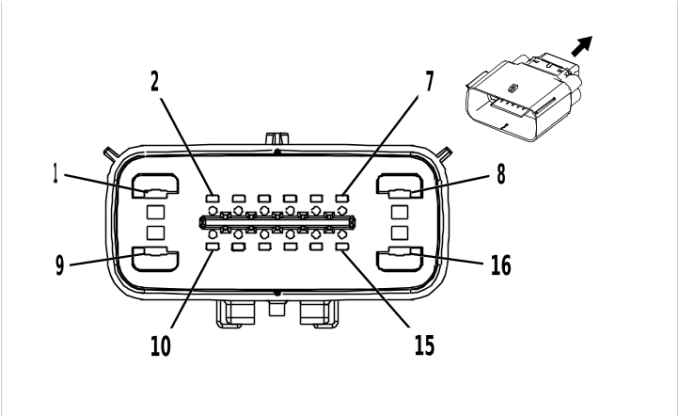

2373686

Connector Part Information
- Harness Type: Engine Wiring Harness
- OEM Connector: 34985-1606
- Service Connector: 19352906
- Description: 16-Way F 1.5, 2.8 MX Series, Sealed(BK)

Connector Part Information
- Harness Type: Chassis Wiring Harness
- OEM Connector: 34986-1601
- Service Connector: 19331031
- Description: 16-Way M 1.5, 2.8 MX Series, Sealed(BK)

Terminal Part Information

Terminal Type ID	Terminated Lead	Diagnostic Test Probe	Terminal Removal Tool
I	13576377	J-35616-35 (VT)	J-38125-12A
II	85528055	J-35616-2A (GY)	J-38125-217
III	19366658	J-35616-5 (PU)	J-38125-12A
IV	86800300	J-35616-3 (GY)	J-38125-217

X403 Engine Wiring Harness to Chassis Wiring Harness (LZ0)

Pin	Size	Color	Circuit	Terminal Type ID	Option	Function	Pin	Size	Color	Circuit	Terminal Type ID	Option
(1) 1	(1) 1	(1) BK / WH	(1) 615 1	(1) I	(1) —	(1) Engine Control Module Ground	(1) 1	(1) 1	(1) BK / WH	(1) 615 1	(1) III	(1) —
(2) 2	(2) 1	(2) VT / GN	(2) 432 0	(2) II	(2) —	(2) Powertrai n Sensor Bus Enable	(2) 2	(2) 0. 5	(2) VT / GN	(2) 432 0	(2) IV	(2) —
(3) 3	(3) 0. 5	(3) G N / GY	(3) 465	(3) II	(3) —	(3) Fuel Pump Primary Relay Control	(3) 3	(3) 0. 5	(3) G N / GY	(3) 465	(3) IV	(3) —
(4) 4	(4) 0. 5	(4) BN / GN	(4) 430 5	(4) II	(4) —	(4) Exhaust Flow Control Valve 1	(4) 4	(4) 0. 5	(4) BN / GN	(4) 430 5	(4) IV	(4) —
(5) 5	(5) 0. 5	(5) W H	(5) 497 6	(5) II	(5) —	(5) AUTOSA R CAN Bus [-] 3 Serial Data	(5) 5	(5) 0. 5	(5) W H	(5) 497 6	(5) IV	(5) —
(6) 6	(6) 0. 5	(6) BU / BK	(6) 497 7	(6) II	(6) —	(6) AUTOSA R CAN Bus [+] 3 Serial Data	(6) 6	(6) 0. 5	(6) BU / BK	(6) 497 7	(6) IV	(6) —
(7) 7	(7) 0. 5	(7) BK / YE	(7) 548	(7) II	(7) —	(7) Engine Control Sensors Low Reference 1	(7) 7	(7) 0. 5	(7) BK / YE	(7) 548	(7) IV	(7) —
(8) 8	(8) 2. 5	(8) BU	(8) 47	(8) I	(8) —	(8) Trailer Auxiliary Control	(8) 8	(8) 2. 5	(8) BU	(8) 47	(8) III	(8) —
(9) 9	(9) 0. 5	(9) VT / BK	(9) 213 9	(9) I	(9) —	(9) Run/ Crank Ignition 1 Voltage	(9) 9	(9) 0. 5	(9) VT / BK	(9) 213 9	(9) III	(9) —
(10) 10	(10) 0.5	(10) B U / RD	(10) 46 0	(10) II	(10) —	(10) Engine Control Sensors 5 Volt Reference 1	(10) 10	(10) 0.5	(10) B U / RD	(10) 46 0	(10) IV	(10) —
(11) 11	(11) 0.75	(11) B N / YE	(11) 82 0	(11) II	(11) —	(11) Center High Mounted Stop Lamp Supply Volt- age	(11) 11	(11) 0.75	(11) B N / YE	(11) 82 0	(11) IV	(11) —
(12) 12	(12) 0.75	(12) Y E / BN	(12) 14 20	(12) II	(12) —	(12) Exhaust Restrictor Motor Open Control	(12) 12	(12) 0.75	(12) Y E / BN	(12) 14 20	(12) IV	(12) —
(13) 13	(13) 0.5	(13) WH	(13) 49 78	(13) II	(13) —	(13) AUTOSA R CAN Bus [-] 2 Serial Data	(13) 13	(13) 0.5	(13) WH	(13) 49 78	(13) IV	(13) —
(14) 14	(14) 0.5	(14) B U / YE	(14) 49 79	(14) II	(14) —	(14) AUTOSA R CAN Bus [+] 2 Serial Data	(14) 14	(14) 0.5	(14) B U / YE	(14) 49 79	(14) IV	(14) —

Pin	Size	Color	Circuit	Terminal Type ID	Option	Function	Pin	Size	Color	Circuit	Terminal Type ID	Option
(15) 15	(15) 0.75	(15) B N	(15) 14 21	(15) II	(15) —	(15) Exhaust Restrictor Motor Closed Control	(15) 15	(15) 0.75	(15) B N	(15) 14 21	(15) IV	(15) —
(16) 16	(16) 1	(16) V T / GN	(16) 43 20	(16) I	(16) —	(16) Powertra in Sensor Bus Enable (16) Powertra in Sensor Bus Enable	(16) 16	(16) 0.5 (16) 1	(16) V T / GN (16) V T / GN	(16) 43 20 (16) 43 20	(16) III (16) III	(16) L3B (16) L84 / L87

X404L Assist Step Motor to Chassis Wiring Harness (B3L)

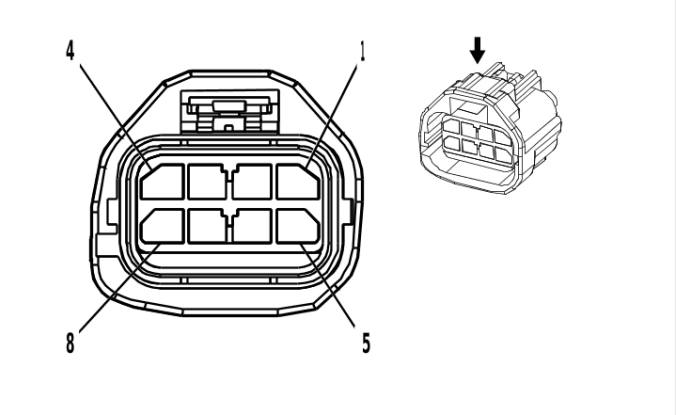

1401778

Connector Part Information
- Harness Type: Assist Step Motor
- OEM Connector: Not Available
- Service Connector: Service by Harness - See Part Catalog
- Description: 8-Way F

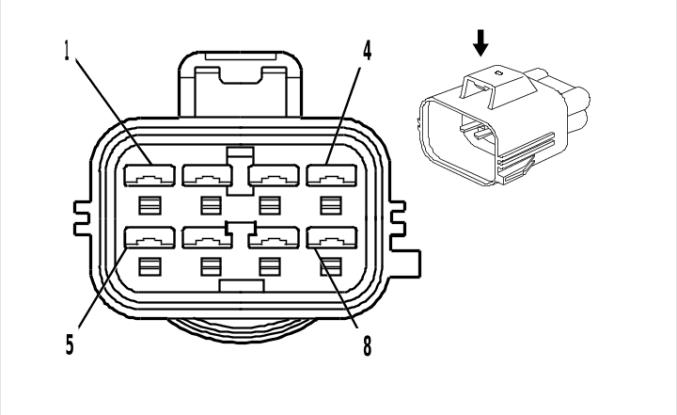

1856785

Connector Part Information
- Harness Type: Chassis Wiring Harness
- OEM Connector: 7282-5574-10
- Service Connector: 19367561
- Description: 8-Way M 2.8 YESC Series, Sealed(D-GY)

Terminal Part Information

Terminal Type ID	Terminated Lead	Diagnostic Test Probe	Terminal Removal Tool
I	Not required	No Tool Required	No Tool Required
II	Not required	J-35616-5 (PU)	No Tool Required

X404L Assist Step Motor to Chassis Wiring Harness (B3L)

Pin	Size	Color	Circuit	Terminal Type ID	Option	Function	Pin	Size	Color	Circuit	Terminal Type ID	Option
(1) 1	(1) 2	(1) W H / BN	(1) 747 1	(1) I	(1) —	(1) Left Running Board Step Motor Control Extend	(1) 1	(1) 2	(1) W H / BN	(1) 747 1	(1) II	(1) —
(2) 2	(2) 0. 5	(2) VT / RD	(2) 746 8	(2) I	(2) —	(2) Left Running Board Step Motor Hall Sensor 5V Reference	(2) 2	(2) 0. 5	(2) VT / RD	(2) 746 8	(2) II	(2) —

Pin	Size	Color	Circuit	Terminal Type ID	Option	Function	Pin	Size	Color	Circuit	Terminal Type ID	Option
(3) 3	(3) 0.5	(3) YE	(3) 7467	(3) I	(3) —	(3) Left Running Board Step Motor Hall Sensor Signal	(3) 3	(3) 0.5	(3) YE	(3) 7467	(3) II	(3) —
(4) 4	(4) 0.5	(4) YE / BN	(4) 7466	(4) I	(4) —	(4) Left Running Board Step Motor Hall Sensor Low Reference	(4) 4	(4) 0.5	(4) YE / BN	(4) 7466	(4) II	(4) —
(5) 5	(5) 2	(5) GY	(5) 7472	(5) I	(5) —	(5) Left Running Board Step Motor Control Retract	(5) 5	(5) 2	(5) GY	(5) 7472	(5) II	(5) —
6	—	—	—	—	—	Not Occupied	6	—	—	—	—	—
(7) 7	(7) 0.5	(7) BN	(7) 4748	(7) I	(7) —	(7) Left Running Board Step Courtesy Lamp Control	(7) 7	(7) 0.5	(7) BN	(7) 4748	(7) II	(7) —
(8) 8	(8) 1	(8) BK	(8) 1650	(8) I	(8) —	(8) Ground	(8) 8	(8) 1	(8) BK	(8) 1650	(8) II	(8) —

X404R Assist Step M to Chassis Wiring Harness (B3L)

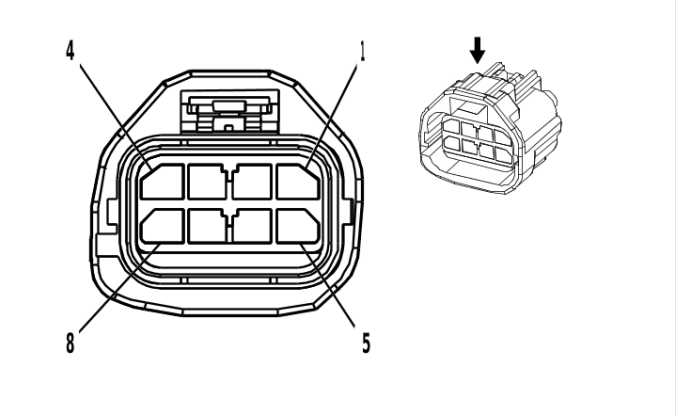

1401778

Connector Part Information
- Harness Type: Assist Step Motor
- OEM Connector: Not Available
- Service Connector: Service by Harness - See Part Catalog
- Description: 8-Way F

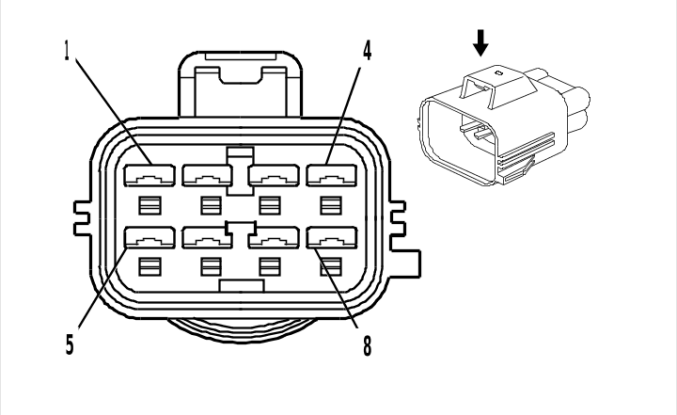

1856785

Connector Part Information
- Harness Type: Chassis Wiring Harness
- OEM Connector: 7282-5574-10
- Service Connector: 19367561
- Description: 8-Way M 2.8 YESC Series, Sealed(D-GY)

Terminal Part Information

Terminal Type ID	Terminated Lead	Diagnostic Test Probe	Terminal Removal Tool
I	Not required	No Tool Required	No Tool Required
II	Not required	J-35616-5 (PU)	No Tool Required

X404R Assist Step M to Chassis Wiring Harness (B3L)

Pin	Size	Color	Circuit	Terminal Type ID	Option	Function	Pin	Size	Color	Circuit	Terminal Type ID	Option
(1) 1	(1) 2	(1) BU	(1) 7470	(1) I	(1) —	(1) Right Running Board Step Motor Control Extend	(1) 1	(1) 2	(1) BU	(1) 7470	(1) II	(1) —
(2) 2	(2) 0.5	(2) GN / RD	(2) 7464	(2) I	(2) —	(2) Right Running Board Step Motor Hall Sensor 5V Reference	(2) 2	(2) 0.5	(2) GN / RD	(2) 7464	(2) II	(2) —
(3) 3	(3) 0.5	(3) VT	(3) 7465	(3) I	(3) —	(3) Right Running Board Step Motor Hall Sensor Signal	(3) 3	(3) 0.5	(3) VT	(3) 7465	(3) II	(3) —
(4) 4	(4) 0.5	(4) YE / BK	(4) 7463	(4) I	(4) —	(4) Right Running Board Step Motor Hall Sensor Low Reference	(4) 4	(4) 0.5	(4) YE / BK	(4) 7463	(4) II	(4) —
(5) 5	(5) 2	(5) GN	(5) 7469	(5) I	(5) —	(5) Right Left Running Board Step Motor Control Retract	(5) 5	(5) 2	(5) GN	(5) 7469	(5) II	(5) —
6	—	—	—	—	—	Not Occupied	6	—	—	—	—	—
(7) 7	(7) 0.5	(7) GY / VT	(7) 4749	(7) I	(7) —	(7) Right Running Board Step Courtesy Lamp Control	(7) 7	(7) 0.5	(7) GY / VT	(7) 4749	(7) II	(7) —
(8) 8	(8) 1	(8) BK	(8) 1650	(8) I	(8) —	(8) Ground	(8) 8	(8) 1	(8) BK	(8) 1650	(8) II	(8) —

X405D Chassis Wiring Harness to Power Steering Wiring Harness Extension Harness

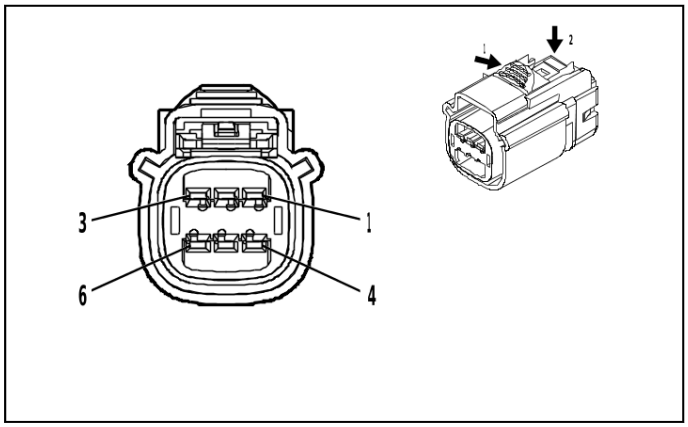

5004419

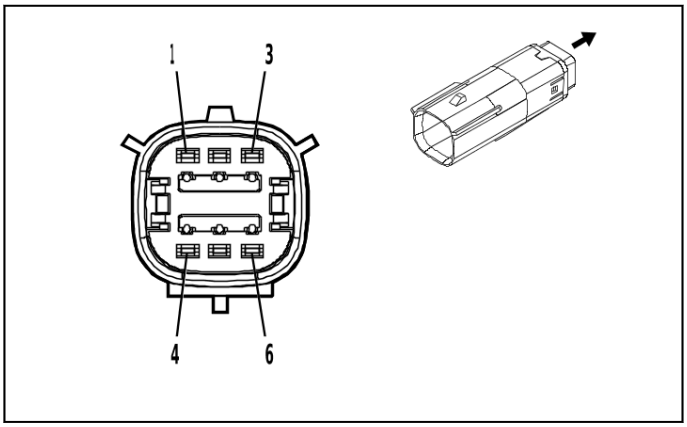

5019118

Connector Part Information
- Harness Type: Chassis Wiring Harness
- OEM Connector: 15513504
- Service Connector: 84999473
- Description: 6-Way F 1.5 OCS Series, Sealed(BK)

Connector Part Information
- Harness Type: Power Steering Wiring Harness Extension Harness
- OEM Connector: 33482-3618
- Service Connector: 19367742
- Description: 6-Way M (BK)

Terminal Part Information

Terminal Type ID	Terminated Lead	Diagnostic Test Probe	Terminal Removal Tool
I	Not required	J-35616-14 (GN)	No Tool Required
II	Not required	J-35616-3 (GY)	No Tool Required

X405D Chassis Wiring Harness to Power Steering Wiring Harness Extension Harness

Pin	Size	Color	Circuit	Terminal Type ID	Option	Function	Pin	Size	Color	Circuit	Terminal Type ID	Option
(1) 1	(1) 0.5	(1) WH	(1) 4978	(1) I	(1) —	(1) AUTOSAR CAN Bus [-] 2 Serial Data	(1) 1	(1) 0.5	(1) WH	(1) 4978	(1) II	(1) —
(2) 2	(2) 0.5	(2) BU / YE	(2) 4979	(2) I	(2) —	(2) AUTOSAR CAN Bus [+] 2 Serial Data	(2) 2	(2) 0.5	(2) BU / YE	(2) 4979	(2) II	(2) —
(3) 3	(3) 0.5	(3) BU / YE	(3) 4979	(3) I	(3) —	(3) AUTOSAR CAN Bus [+] 2 Serial Data	(3) 3	(3) 0.5	(3) BU / YE	(3) 4979	(3) II	(3) —
(4) 4	(4) 0.5	(4) WH	(4) 4978	(4) I	(4) —	(4) AUTOSAR CAN Bus [-] 2 Serial Data	(4) 4	(4) 0.5	(4) WH	(4) 4978	(4) II	(4) —
5 - 6	—	—	—	—	—	Not Occupied	5 - 6	—	—	—	—	—

X405P Power Steering Wiring Harness to Power Steering Control Module Wiring Harness

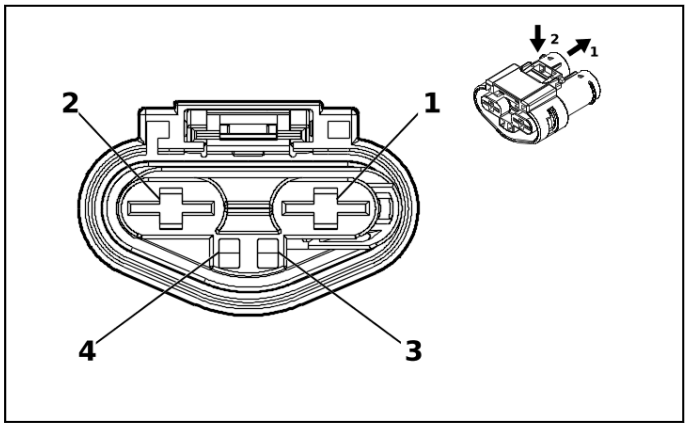

5330342

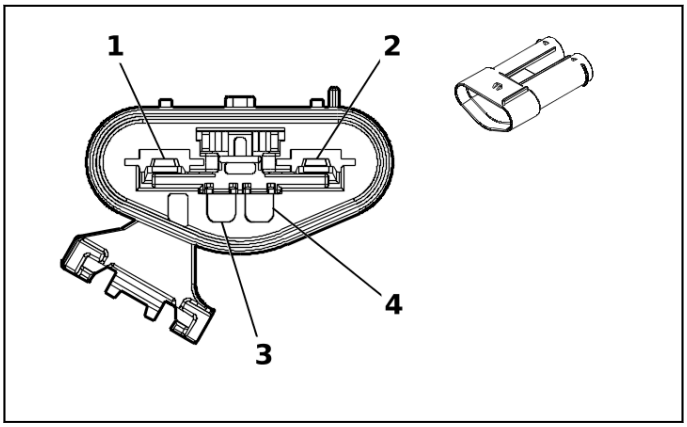

5330353

Connector Part Information

- Harness Type: Power Steering Wiring Harness
- OEM Connector: 13508902
- Service Connector: Service by Harness - See Part Catalog
- Description: 4-Way F 2.8, 12 MAK Series, Sealed(BK)

Connector Part Information

- Harness Type: Power Steering Control Module Wiring Harness
- OEM Connector: Not Available
- Service Connector: Service by Harness - See Part Catalog
- Description: 4-Way M (BK)

Terminal Part Information

Terminal Type ID	Terminated Lead	Diagnostic Test Probe	Terminal Removal Tool
I	Not required	No Tool Required	No Tool Required
II	Not required	No Tool Required	No Tool Required

X405P Power Steering Wiring Harness to Power Steering Control Module Wiring Harness

Pin	Size	Color	Circuit	Terminal Type ID	Option	Function	Pin	Size	Color	Circuit	Terminal Type ID	Option
(1) 1	(1) 2 5	(1) BK	(1) 350	(1) I	(1) —	(1) Ground	(1) 1	(1) 2 5	(1) BK	(1) 350	(1) II	(1) —
(2) 2	(2) 2 5	(2) RD / VT	(2) 842	(2) I	(2) —	(2) Battery Positive Voltage	(2) 2	(2) 2 5	(2) RD / VT	(2) 842	(2) II	(2) —
3 - 4	—	—	—	—	—	Not Occupied	3 - 4	—	—	—	—	—

X415 Transfer Case Selector Shift Control Switch Wiring Harness Extension Harness to Engine Wiring Harness (NP0 / NQH)

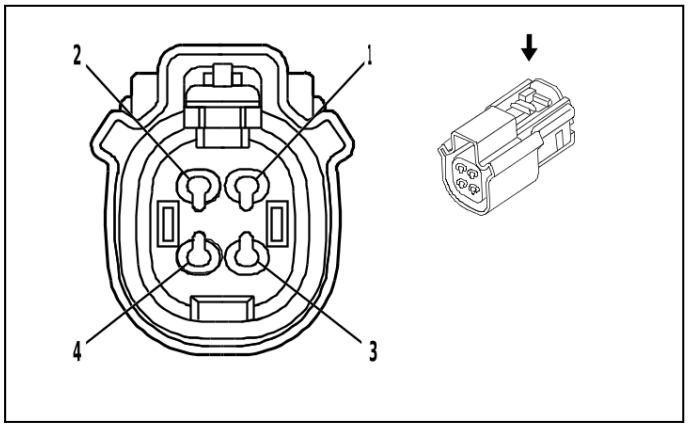

1960031

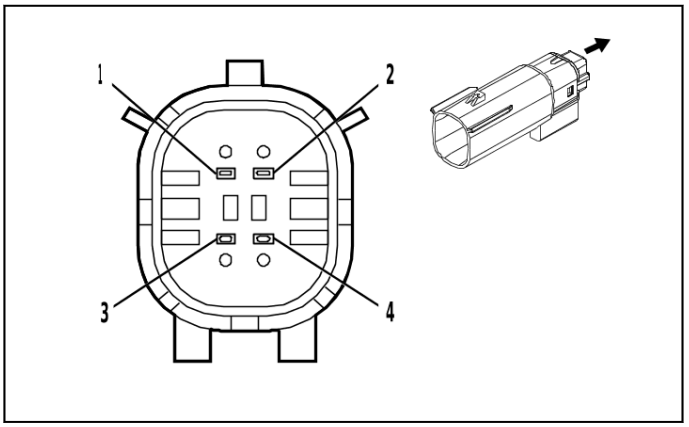

2368875

Connector Part Information
- Harness Type: Transfer Case Selector Shift Control Switch Wiring Harness Extension Harness
- OEM Connector: 33472-4006
- Service Connector: Service by Harness - See Part Catalog
- Description: 4-Way F 1.5 MX Series, Sealed(BK)

Connector Part Information
- Harness Type: Engine Wiring Harness
- OEM Connector: 33482-4001
- Service Connector: 84838880
- Description: 4-Way M 1.5 MX Series, Sealed(BK)

Terminal Part Information

Terminal Type ID	Terminated Lead	Diagnostic Test Probe	Terminal Removal Tool
I	Not required	J-35616-2A (GY)	No Tool Required
II	Not required	J-35616-3 (GY)	No Tool Required

X415 Transfer Case Selector Shift Control Switch Wiring Harness Extension Harness to Engine Wiring Harness (NP0 / NQH)

Pin	Size	Color	Circuit	Terminal Type ID	Option	Function	Pin	Size	Color	Circuit	Terminal Type ID	Option
(1) 1	(1) 0.5	(1) BK	(1) 450	(1) I	(1) —	(1) Ground	(1) 1	(1) 0.75	(1) BK	(1) 6550	(1) II	(1) —
(2) 2	(2) 0.5	(2) YE / WH	(2) 1695	(2) I	(2) —	(2) 4WD Locked Range Indicator Control	(2) 2	(2) 0.5	(2) YE / WH	(2) 1695	(2) II	(2) —
(3) 3	(3) 0.5	(3) GN	(3) 8016	(3) I	(3) —	(3) Secondary Axle Motor Control	(3) 3	(3) 0.75	(3) GN	(3) 8016	(3) II	(3) —
(4) 4	(4) 0.5	(4) GY / BK	(4) 1570	(4) I	(4) —	(4) Front Axle Actuator Control	(4) 4	(4) 0.5	(4) GY / BK	(4) 1570	(4) II	(4) —

X415R Chassis Wiring Harness to Differential Carrier Lock Wiring Harness (G96)

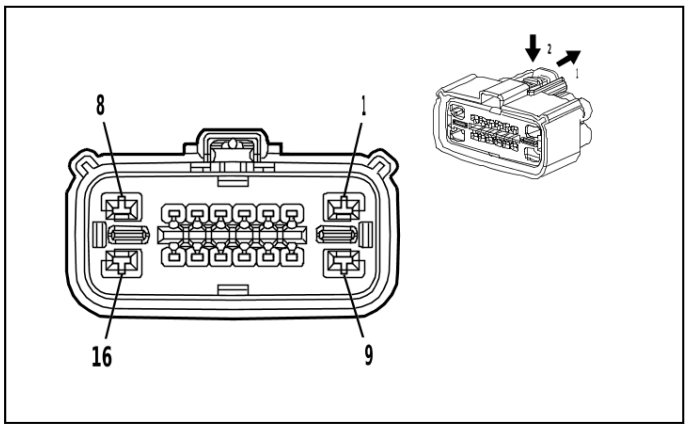

4283035

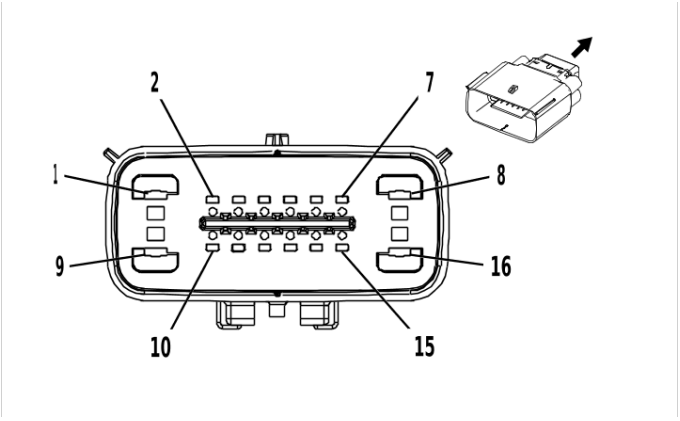

2373686

Connector Part Information
- Harness Type: Chassis Wiring Harness
- OEM Connector: 34985-4156
- Service Connector: 19352906
- Description: 16-Way F 1.5, 2.8 MX Series, Sealed(BK)

Connector Part Information
- Harness Type: Differential Carrier Lock Wiring Harness
- OEM Connector: 34986-1601
- Service Connector: Service by Harness - See Part Catalog
- Description: 16-Way M 1.5, 2.8 MX Series, Sealed(BK)

Terminal Part Information

Terminal Type ID	Terminated Lead	Diagnostic Test Probe	Terminal Removal Tool
I	13576377	J-35616-35 (VT)	J-38125-12A
II	85528055	J-35616-2A (GY)	J-38125-217
III	Not required	J-35616-3 (GY)	No Tool Required
IV	Not required	J-35616-5 (PU)	No Tool Required

X415R Chassis Wiring Harness to Differential Carrier Lock Wiring Harness (G96)

Pin	Size	Color	Circuit	Terminal Type ID	Option	Function	Pin	Size	Color	Circuit	Terminal Type ID	Option
(1) 1	(1) 2.5	(1) GY / BN	(1) 7968	(1) I	(1) —	(1) Axle Differential Lock Control High	(1) 1	(1) 2.5	(1) GY / BN	(1) 7968	(1) IV	(1) —
(2) 2	(2) 0.75	(2) W H	(2) 7971	(2) II	(2) —	(2) Axle Differential Lock Motor Brake Control High	(2) 2	(2) 0.5	(2) W H	(2) 7971	(2) III	(2) —
(3) 3	(3) 0.5	(3) G N / BN	(3) 7975	(3) II	(3) —	(3) Axle Differential Lock Motor Position Sensor Signal 1	(3) 3	(3) 0.5	(3) G N / BN	(3) 7975	(3) III	(3) —
(4) 4	(4) 0.5	(4) BK / VT	(4) 7974	(4) II	(4) —	(4) Axle Differential Lock Motor Position Sensor Low Reference	(4) 4	(4) 0.5	(4) BK / VT	(4) 7974	(4) III	(4) —

Pin	Size	Color	Circuit	Terminal Type ID	Option	Function	Pin	Size	Color	Circuit	Terminal Type ID	Option
(5) 5	(5) 0.75	(5) VT / BK	(5) 7972	(5) II	(5) —	(5) Axle Differential Lock Motor Brake Control Low	(5) 5	(5) 0.5	(5) VT / BK	(5) 7972	(5) III	(5) —
(6) 6	(6) 0.75	(6) WH / RD	(6) 7973	(6) II	(6) —	(6) Axle Differential Lock Motor Position Sensor High Reference	(6) 6	(6) 0.5	(6) WH / RD	(6) 7973	(6) III	(6) —
(7) 7	(7) 0.5	(7) BK / YE	(7) 7977	(7) II	(7) —	(7) Axle Differential Lock Motor Temperature Sensor Low Reference	(7) 7	(7) 0.5	(7) BK / YE	(7) 7977	(7) III	(7) —
8	—	—	—	—	—	Not Occupied	8	—	—	—	—	—
(9) 9	(9) 2.5	(9) YE / WH	(9) 7969	(9) I	(9) —	(9) Axle Differential Lock Control Low	(9) 9	(9) 2.5	(9) YE / WH	(9) 7969	(9) IV	(9) —
(10) 10	(10) 0.5	(10) BK	(10) 7970	(10) II	(10) —	(10) Axle Differential Lock Control Shield	(10) 10	(10) 0.5	(10) BK	(10) 7970	(10) III	(10) —
(11) 11	(11) 0.5	(11) GY	(11) 7976	(11) II	(11) —	(11) Axle Differential Lock Motor Position Sensor Signal 2	(11) 11	(11) 0.5	(11) GY	(11) 7976	(11) III	(11) —
(12) 12	(12) 0.5	(12) BU / WH	(12) 7978	(12) II	(12) —	(12) Axle Differential Lock Motor Temperature Sensor Signal	(12) 12	(12) 0.5	(12) BU / WH	(12) 7978	(12) III	(12) —
13 - 16	—	—	—	—	—	Not Occupied	13 - 16	—	—	—	—	—

X500 Front Side Door Door Wiring Harness - Driver to Body Wiring Harness

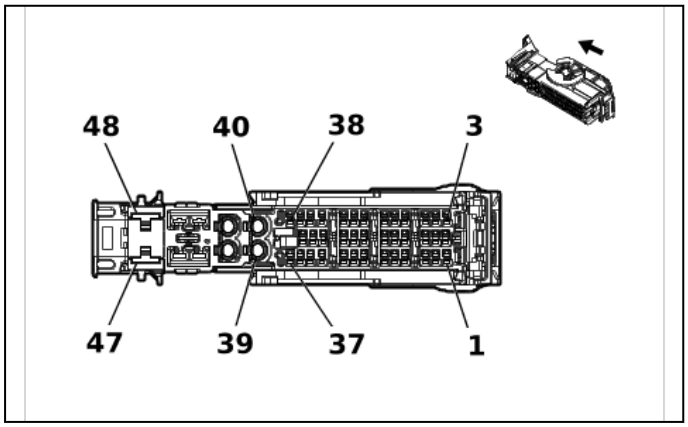

6192563

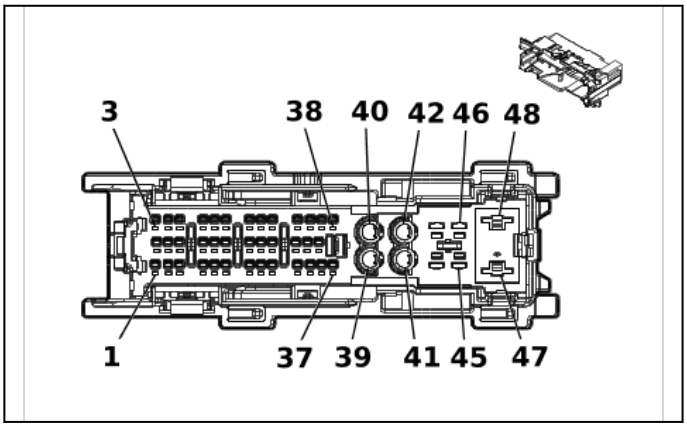

6187159

Connector Part Information

- Harness Type: Front Side Door Door Wiring Harness - Driver
- OEM Connector: 6099-0288
- Service Connector: Service by Harness - See Part Catalog
- Description: 48-Way F 1.2 SWS, 2.8, 6.3 YESC, Coaxial Series(BK)

Connector Part Information

- Harness Type: Body Wiring Harness
- OEM Connector: 6099-0283
- Service Connector: 13551223
- Description: 48-Way M 1.2 SWS, 2.8, 6.3 YESC, Coaxial Series(BK)

Terminal Part Information

Terminal Type ID	Terminated Lead	Diagnostic Test Probe	Terminal Removal Tool
I	Not required	J-35616-12 (BU)	No Tool Required
II	Not required	J-35616-16 (L-GN)	No Tool Required
III	Not required	J-35616-42 (RD)	No Tool Required
IV	Service by Cable	No Tool Required	No Tool Required
V	84616651	J-35616-13 (BU)	J-38125-215A
VI	87838107	J-35616-43 (RD)	J-38125-11A
VII	Service by Cable	No Tool Required	No Tool Required

X500 Front Side Door Door Wiring Harness - Driver to Body Wiring Harness

Pin	Size	Color	Circuit	Terminal Type ID	Option	Function	Pin	Size	Color	Circuit	Terminal Type ID	Option
(1) 1	(1) 0.75	(1) BU / VT	(1) 8873	(1) II	(1) —	(1) Police Left Mirror Light Steady Burn Control	(1) 1	(1) 0.75	(1) BU / VT	(1) 8873	(1) V	(1) —
(2) 2	(2) 0.75	(2) GY	(2) 2681	(2) II	(2) —	(2) Left Front Door Lock Actuator Lock Control	(2) 2	(2) 0.75	(2) GY	(2) 2681	(2) V	(2) —
3 - 4	—	—	—	—	—	Not Occupied	3 - 4	—	—	—	—	—
(5) 5	(5) 0.5	(5) BK / WH	(5) 1151	(5) II	(5) —	(5) Signal Ground	(5) 5	(5) 0.5	(5) BK / WH	(5) 1151	(5) V	(5) —
(6) 6	(6) 0.35	(6) GN / BK	(6) 2738	(6) I	(6) —	(6) Near Field Communication Module LIN Bus 1	(6) 6	(6) 0.35	(6) GN / BK	(6) 2738	(6) V	(6) —

Pin	Size	Color	Circuit	Terminal Type ID	Option	Function	Pin	Size	Color	Circuit	Terminal Type ID	Option
(7) 7	(7) 0.75	(7) BK / VT	(7) 8871	(7) II	(7) —	(7) Police Left Mirror Light Low Reference	(7) 7	(7) 0.75	(7) BK / VT	(7) 8871	(7) V	(7) —
(8) 8	(8) 0.75	(8) VT	(8) 8870	(8) II	(8) —	(8) Police Left Mirror Light Control	(8) 8	(8) 0.75	(8) VT	(8) 8870	(8) V	(8) —
9	—	—	—	—	—	Not Occupied	9	—	—	—	—	—
(10) 10	(10) 0.75	(10) BN / BU	(10) 118	(10) II	(10) —	(10) Left Front Speaker [-] Control 1 (10) Left Front Speaker [-] Control 1	(10) 10	(10) 0.5 (10) 0.75	(10) BN / BU (10) BN / BU	(10) 118 (10) 118	(10) V (10) V	(10) (IOR / IOK) & UQF (10) UQA / UQS
(11) 11	(11) 0.75	(11) YE / VT	(11) 8874	(11) II	(11) —	(11) Police Left Mirror Light Flash Enable Signal	(11) 11	(11) 0.75	(11) YE / VT	(11) 8874	(11) V	(11) —
(12) 12	(12) 0.35	(12) VT / GY	(12) 126	(12) I	(12) —	(12) Left Front Door Open Switch Signal	(12) 12	(12) 0.35	(12) VT / GY	(12) 126	(12) V	(12) —
(13) 13	(13) 0.75	(13) BU	(13) 201	(13) II	(13) —	(13) Left Front Speaker 1 [+] Control (13) Left Front Speaker 1 [+] Control	(13) 13	(13) 0.5 (13) 0.75	(13) BU (13) BU	(13) 201 (13) 201	(13) V (13) V	(13) (IOR / IOK) & UQF (13) UQA / UQS
(14) 14	(14) 0.5	(14) BU	(14) 2675	(14) II	(14) —	(14) Left Front Exterior Door Handle Switch Unlock Signal	(14) 14	(14) 0.35	(14) BU	(14) 2675	(14) V	(14) —
15	—	—	—	—	—	Not Occupied	15	—	—	—	—	—
(16) 16	(16) 0.35	(16) YE / WH	(16) 1690	(16) I	(16) —	(16) Mirror Dimming Signal	(16) 16	(16) 0.35	(16) YE / WH	(16) 1690	(16) V	(16) —
(17) 17	(17) 0.35	(17) BK / YE	(17) 1691	(17) I	(17) —	(17) Automatic Day/Night Mirror Low Reference	(17) 17	(17) 0.35	(17) BK / YE	(17) 1691	(17) V	(17) —
18	—	—	—	—	—	Not Occupied	18	—	—	—	—	—
(19) 19	(19) 0.75	(19) WH	(19) 2679	(19) II	(19) —	(19) Lock Actuators Unlock Control 1	(19) 19	(19) 0.75	(19) WH	(19) 2679	(19) V	(19) —
20 - 21	—	—	—	—	—	Not Occupied	20 - 21	—	—	—	—	—
(22) 22	(22) 0.75	(22) WH / VT	(22) 8872	(22) II	(22) —	(22) Police Left Mirror Light Synchronization Signal	(22) 22	(22) 0.75	(22) WH / VT	(22) 8872	(22) V	(22) —
(23) 23	(23) 0.5	(23) RD / VT	(23) 1940	(23) II	(23) —	(23) Battery Positive Voltage	(23) 23	(23) 0.5	(23) RD / VT	(23) 1940	(23) V	(23) —

Pin	Size	Color	Circuit	Terminal Type ID	Option	Function	Pin	Size	Color	Circuit	Terminal Type ID	Option
(24) 24	(24) 0.35	(24) GN / YE	(24) 61 34	(24) I	(24) —	(24) Body Control Module LIN Bus 3	(24) 24	(24) 0.5	(24) GN / YE	(24) 61 34	(24) V	(24) —
(25) 25	(25) 0.5	(25) WH	(25) 61 5	(25) II	(25) —	(25) Seat Memory Switch Signal 1	(25) 25	(25) 0.5	(25) WH	(25) 61 5	(25) V	(25) —
(26) 26	(26) 0.5	(26) BU / GN	(26) 61 4	(26) II	(26) —	(26) Seat Memory Switch Set Signal	(26) 26	(26) 0.5	(26) BU / GN	(26) 61 4	(26) V	(26) —
(27) 27	(27) 0.35	(27) WH / GY	(27) 21 14	(27) I	(27) —	(27) Left Turn Signal Lamp Control 2	(27) 27	(27) 0.35	(27) WH / GY	(27) 21 14	(27) V	(27) —
28 - 30	—	—	—	—	—	Not Occupied	28 - 30	—	—	—	—	—
(31) 31	(31) 0.35	(31) WH / GN	(31) 59 66	(31) I	(31) —	(31) Approach Lamp Control	(31) 31	(31) 0.5	(31) WH / GN	(31) 59 66	(31) V	(31) —
32	—	—	—	—	—	Not Occupied	32	—	—	—	—	—
(33) 33	(33) 0.35	(33) GY	(33) 72 8	(33) I	(33) —	(33) Security Indicator Control	(33) 33	(33) 0.5	(33) GY	(33) 72 8	(33) V	(33) —
34	—	—	—	—	—	Not Occupied	34	—	—	—	—	—
(35) 35	(35) 0.5	(35) BK / OG	(35) 66 28	(35) II	(35) —	(35) Left Front Side Impact Sensor Low Reference	(35) 35	(35) 0.5	(35) BK / OG	(35) 66 28	(35) V	(35) —
(36) 36	(36) 0.5	(36) OG / GN	(36) 21 32	(36) II	(36) —	(36) Left Front Side Impact Sensor Signal	(36) 36	(36) 0.5	(36) OG / GN	(36) 21 32	(36) V	(36) —
37 - 38	—	—	—	—	—	Not Occupied	37 - 38	—	—	—	—	—
(39) 39	(39) 0	(39) Coax Cable	(39) 47 25	(39) IV	(39) —	(39) Left Sideview Camera LVDS (Low Voltage Differential Signaling) Coaxial Signal	(39) 39	(39) 0	(39) Coax Cable	(39) 47 25	(39) VII	(39) —
40 - 46	—	—	—	—	—	Not Occupied	40 - 46	—	—	—	—	—
(47) 47	(47) 2.5	(47) BK	(47) 11 50	(47) III	(47) —	(47) Ground	(47) 47	(47) 2.5	(47) BK	(47) 11 50	(47) VI	(47) —
(48) 48	(48) 2.5	(48) RD / GY	(48) 35 40	(48) III	(48) —	(48) Battery Positive Voltage	(48) 48	(48) 2.5	(48) RD / GY	(48) 35 40	(48) VI	(48) —

X505 Front Side Door Door Wiring Harness - Driver to Front Side Door Door Lock Door Wiring Harness - Driver

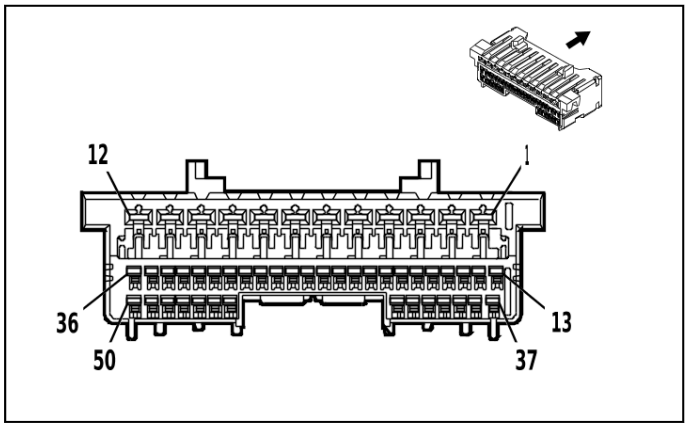

4997556

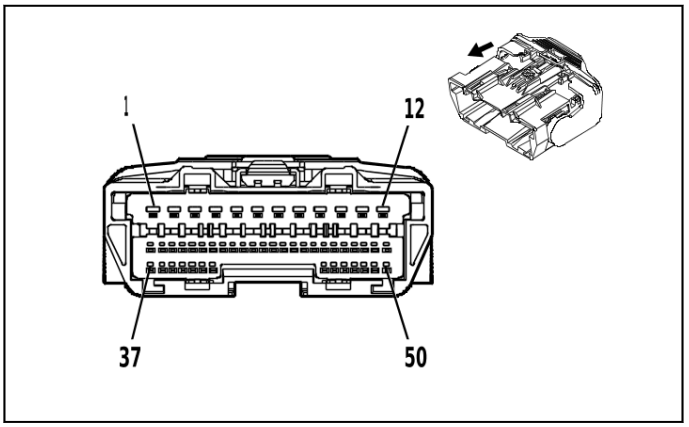

5022037

Connector Part Information

- Harness Type: Front Side Door Door Wiring Harness - Driver
- OEM Connector: 35283943
- Service Connector: Service by Harness - See Part Catalog
- Description: 50-Way F 1.2, 2.8 OCS Series(BK)

Connector Part Information

- Harness Type: Front Side Door Door Lock Door Wiring Harness - Driver
- OEM Connector: 33390111
- Service Connector: Service by Harness - See Part Catalog
- Description: 50-Way M 1.2, 2.8 OCS Series(BK)

Terminal Part Information

Terminal Type ID	Terminated Lead	Diagnostic Test Probe	Terminal Removal Tool
I	Not required	J-35616-12 (BU)	No Tool Required
II	Not required	J-35616-16 (L-GN)	No Tool Required
III	Not required	J-35616-4A (PU)	No Tool Required
IV	Not required	J-35616-13 (BU)	No Tool Required
V	Not required	J-35616-17 (L-GN)	No Tool Required
VI	Not required	J-35616-5 (PU)	No Tool Required

X505 Front Side Door Door Wiring Harness - Driver to Front Side Door Door Lock Door Wiring Harness - Driver

Pin	Size	Color	Circuit	Terminal Type ID	Option	Function	Pin	Size	Color	Circuit	Terminal Type ID	Option
1 - 2	—	—	—	—	—	Not Occupied	1 - 2	—	—	—	—	—
(3) 3	(3) 0.35	(3) VT / BU	(3) 2788	(3) III	(3) —	(3) Left Front Mirror Motor Up [+] Down [-] Control	(3) 3	(3) 0.35	(3) VT / BU	(3) 2788	(3) VI	(3) —
(4) 4	(4) 0.35	(4) VT / RD	(4) 2791	(4) III	(4) —	(4) Left Front Mirror Position Sensor High Reference	(4) 4	(4) 0.35	(4) VT / RD	(4) 2791	(4) VI	(4) —
5	—	—	—	—	—	Not Occupied	5	—	—	—	—	—
(6) 6	(6) 0.35	(6) GY	(6) 728	(6) III	(6) —	(6) Security Indicator Control	(6) 6	(6) 0.35	(6) GY	(6) 728	(6) VI	(6) —
7 - 8	—	—	—	—	—	Not Occupied	7 - 8	—	—	—	—	—

Pin	Size	Color	Circuit	Terminal Type ID	Option	Function	Pin	Size	Color	Circuit	Terminal Type ID	Option
(9) 9	(9) 0.35	(9) WH / YE	(9) 2792	(9) III	(9) —	(9) Left Front Mirror Position Sensor Left [-] Right [+] Signal	(9) 9	(9) 0.35	(9) WH / YE	(9) 2792	(9) VI	(9) —
(10) 10	(10) 0.35	(10) WH / BN	(10) 2764	(10) III	(10) —	(10) Window Switch Left Front Down Signal	(10) 10	(10) 0.35	(10) WH / BN	(10) 2764	(10) VI	(10) —
11 - 14	—	—	—	—	—	Not Occupied	11 - 14	—	—	—	—	—
(15) 15	(15) 0.5	(15) WH	(15) 615	(15) II	(15) —	(15) Seat Memory Switch Signal 1	(15) 15	(15) 0.35	(15) WH	(15) 615	(15) IV	(15) —
(16) 16	(16) 0.75	(16) BK	(16) 1150	(16) II	(16) —	(16) Ground	(16) 16	(16) 0.35	(16) BK	(16) 1150	(16) IV	(16) —
(17) 17	(17) 0.35	(17) GN / YE	(17) 6134	(17) I	(17) —	(17) Body Control Module LIN Bus 3	(17) 17	(17) 0.35	(17) GN / YE	(17) 6134	(17) IV	(17) —
(18) 18	(18) 0.35	(18) GN	(18) 2766	(18) I	(18) —	(18) Power Window Switch Left Front Express Signal	(18) 18	(18) 0.35	(18) GN	(18) 2766	(18) IV	(18) —
19	—	—	—	—	—	Not Occupied	19	—	—	—	—	—
(20) 20	(20) 0.5	(20) RD / VT	(20) 1940	(20) II	(20) —	(20) Battery Positive Voltage	(20) 20	(20) 0.5	(20) RD / VT	(20) 1940	(20) V	(20) —
(21) 21	(21) 0.35	(21) YE / BN	(21) 2789	(21) I	(21) —	(21) Left Front Mirror Motor Common Control	(21) 21	(21) 0.35	(21) YE / BN	(21) 2789	(21) IV	(21) —
22	—	—	—	—	—	Not Occupied	22	—	—	—	—	—
(23) 23	(23) 0.35	(23) WH / VT	(23) 4258	(23) I	(23) —	(23) Left Front Door Lock Status Signal	(23) 23	(23) 0.35	(23) WH / VT	(23) 4258	(23) IV	(23) —
(24) 24	(24) 0.35	(24) BK / BN	(24) 673	(24) I	(24) —	(24) Left Outside Rearview Mirror Position Sensor Low Reference	(24) 24	(24) 0.35	(24) BK / BN	(24) 673	(24) IV	(24) —
(25) 25	(25) 0.35	(25) GY / GN	(25) 2763	(25) I	(25) —	(25) Window Switch Left Front Up Signal	(25) 25	(25) 0.35	(25) GY / GN	(25) 2763	(25) IV	(25) —
26	—	—	—	—	—	Not Occupied	26	—	—	—	—	—
(27) 27	(27) 0.35	(27) BN / BK	(27) 2790	(27) I	(27) —	(27) Left Front Mirror Motor Right [+] Left [-] Control	(27) 27	(27) 0.35	(27) BN / BK	(27) 2790	(27) IV	(27) —
28 - 30	—	—	—	—	—	Not Occupied	28 - 30	—	—	—	—	—

Pin	Size	Color	Circuit	Terminal Type ID	Option	Function	Pin	Size	Color	Circuit	Terminal Type ID	Option
(31) 31	(31) 0.35	(31) GY / YE	(31) 17 60	(31) I	(31) —	(31) Left Side Object Detection LED Control	(31) 31	(31) 0.35	(31) GY / YE	(31) 17 60	(31) IV	(31) —
32 - 35	—	—	—	—	—	Not Occupied	32 - 35	—	—	—	—	—
(36) 36	(36) 0.5	(36) BK / WH	(36) 11 51	(36) II	(36) —	(36) Signal Ground	(36) 36	(36) 0.35	(36) BK / WH	(36) 11 51	(36) IV	(36) —
37	—	—	—	—	—	Not Occupied	37	—	—	—	—	—
(38) 38	(38) 0.35	(38) WH	(38) 60 6	(38) I	(38) —	(38) Left Outside Rearview Mirror Heater Control	(38) 38	(38) 0.35	(38) WH	(38) 60 6	(38) IV	(38) —
(39) 39	(39) 0.35	(39) GY / WH	(39) 27 85	(39) I	(39) —	(39) Left Front Mirror Motor Fold Out Control	(39) 39	(39) 0.35	(39) GY / WH	(39) 27 85	(39) IV	(39) —
40 - 42	—	—	—	—	—	Not Occupied	40 - 42	—	—	—	—	—
(43) 43	(43) 0.35	(43) WH / GN	(43) 27 86	(43) I	(43) —	(43) Left Front Mirror Motor Fold In Control	(43) 43	(43) 0.35	(43) WH / GN	(43) 27 86	(43) IV	(43) —
44	—	—	—	—	—	Not Occupied	44	—	—	—	—	—
(45) 45	(45) 0.5	(45) BU / GN	(45) 61 4	(45) II	(45) —	(45) Seat Memory Switch Set Signal	(45) 45	(45) 0.35	(45) BU / GN	(45) 61 4	(45) IV	(45) —
(46) 46	(46) 0.35	(46) GY / BN	(46) 27 87	(46) I	(46) —	(46) Left Front Mirror Position Sensor Up [+] Down [-] Signal	(46) 46	(46) 0.35	(46) GY / BN	(46) 27 87	(46) IV	(46) —
47 - 50	—	—	—	—	—	Not Occupied	47 - 50	—	—	—	—	—

X600 Front Side Door Door Wiring Harness - Passenger to Body Wiring Harness

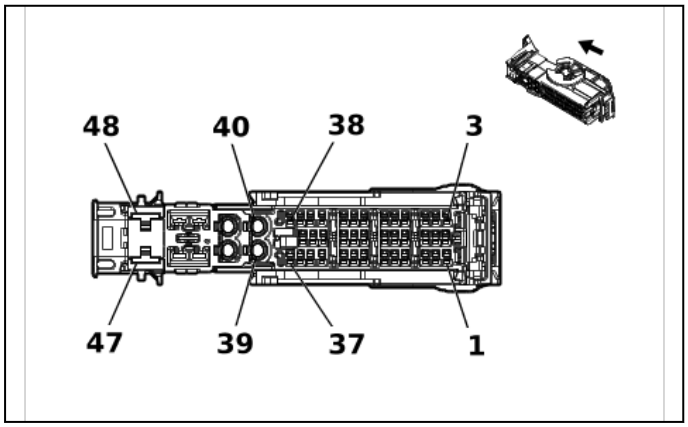

6192563

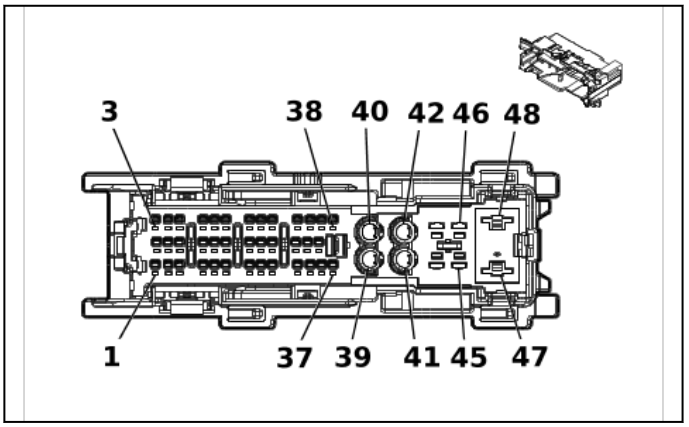

6187159

Connector Part Information

- Harness Type: Front Side Door Door Wiring Harness - Passenger
- OEM Connector: 6099-0288
- Service Connector: Service by Harness - See Part Catalog
- Description: 48-Way F 1.2 SWS, 2.8, 6.3 YESC, Coaxial Series(BK)

Connector Part Information

- Harness Type: Body Wiring Harness
- OEM Connector: 6099-0283
- Service Connector: 13551223
- Description: 48-Way M 1.2 SWS, 2.8, 6.3 YESC, Coaxial Series(BK)

Terminal Part Information

Terminal Type ID	Terminated Lead	Diagnostic Test Probe	Terminal Removal Tool
I	Not required	J-35616-12 (BU)	No Tool Required
II	Not required	J-35616-16 (L-GN)	No Tool Required
III	Not required	J-35616-42 (RD)	No Tool Required
IV	Service by Cable	No Tool Required	No Tool Required
V	84616651	J-35616-13 (BU)	J-38125-215A
VI	87838107	J-35616-43 (RD)	J-38125-11A
VII	Service by Cable	No Tool Required	No Tool Required

X600 Front Side Door Door Wiring Harness - Passenger to Body Wiring Harness

Pin	Size	Color	Circuit	Terminal Type ID	Option	Function	Pin	Size	Color	Circuit	Terminal Type ID	Option
1 - 3	—	—	—	—	—	Not Occupied	1 - 3	—	—	—	—	—
(4) 4	(4) 0.35	(4) GN / GY	(4) 2115	(4) I	(4) —	(4) Right Turn Signal Lamp Control 2	(4) 4	(4) 0.35	(4) GN / GY	(4) 2115	(4) V	(4) —
(5) 5	(5) 0.5	(5) BK / WH	(5) 1251	(5) II	(5) —	(5) Signal Ground	(5) 5	(5) 0.75	(5) BK / WH	(5) 1251	(5) V	(5) —
6 - 7	—	—	—	—	—	Not Occupied	6 - 7	—	—	—	—	—
(8) 8	(8) 0.75	(8) BK / GY	(8) 8881	(8) II	(8) —	(8) Police Right Mirror Light Low Reference	(8) 8	(8) 0.75	(8) BK / GY	(8) 8881	(8) V	(8) —
9	—	—	—	—	—	Not Occupied	9	—	—	—	—	—

Pin	Size	Color	Circuit	Terminal Type ID	Option	Function	Pin	Size	Color	Circuit	Terminal Type ID	Option
(10) 10	(10) 0.75	(10) YE / BK	(10) 117	(10) II	(10) —	(10) Right Front Speaker [-] Control 1 (10) Right Front Speaker [-] Control 1	(10) 10	(10) 0.5 (10) 0.75	(10) YE / BK (10) YE / BK	(10) 117 (10) 117	(10) V (10) V	(10) UQS (10) UQF
(11) 11	(11) 0.75	(11) GY	(11) 8880	(11) II	(11) —	(11) Police Right Mirror Light Control	(11) 11	(11) 0.75	(11) GY	(11) 8880	(11) V	(11) —
12	—	—	—	—	—	Not Occupied	12	—	—	—	—	—
(13) 13	(13) 0.75	(13) YE	(13) 200	(13) II	(13) —	(13) Right Front Speaker 1 [+] Control (13) Right Front Speaker 1 [+] Control	(13) 13	(13) 0.5 (13) 0.75	(13) YE (13) YE	(13) 200 (13) 200	(13) V (13) V	(13) UQS (13) UQF
(14) 14	(14) 0.75	(14) WH / GY	(14) 8882	(14) II	(14) —	(14) Police Right Mirror Light Syn-chronization Signal	(14) 14	(14) 0.75	(14) WH / GY	(14) 8882	(14) V	(14) —
15 - 17	—	—	—	—	—	Not Occupied	15 - 17	—	—	—	—	—
(18) 18	(18) 0.75	(18) YE / GY	(18) 8884	(18) II	(18) —	(18) Police Right Mirror Light Flash Enable Signal	(18) 18	(18) 0.75	(18) YE / GY	(18) 8884	(18) V	(18) —
(19) 19	(19) 0.75	(19) GY / BK	(19) 2680	(19) II	(19) —	(19) Lock Actuators Unlock Control 2	(19) 19	(19) 0.75	(19) GY / BK	(19) 2680	(19) V	(19) —
(20) 20	(20) 0.5	(20) BN / OG	(20) 2134	(20) II	(20) —	(20) Right Front Side Impact Sensor Signal	(20) 20	(20) 0.5	(20) BN / OG	(20) 2134	(20) V	(20) —
(21) 21	(21) 0.5	(21) BK / OG	(21) 6629	(21) II	(21) —	(21) Right Front Side Impact Sensor Low Reference	(21) 21	(21) 0.5	(21) BK / OG	(21) 6629	(21) V	(21) —
(22) 22	(22) 0.75	(22) YE / GN	(22) 2682	(22) II	(22) —	(22) Right Front Door Lock Actuator Lock Control	(22) 22	(22) 0.75	(22) YE / GN	(22) 2682	(22) V	(22) —
(23) 23	(23) 0.5	(23) RD / BU	(23) 5240	(23) II	(23) —	(23) Battery Positive Volt-age	(23) 23	(23) 0.5	(23) RD / BU	(23) 5240	(23) V	(23) —
(24) 24	(24) 0.35	(24) GN / YE	(24) 6134	(24) I	(24) —	(24) Body Control Module LIN Bus 3	(24) 24	(24) 0.5	(24) GN / YE	(24) 6134	(24) V	(24) —
(25) 25	(25) 0.75	(25) BU / GY	(25) 8883	(25) II	(25) —	(25) Police Right Mirror Light Steady Burn Control	(25) 25	(25) 0.75	(25) BU / GY	(25) 8883	(25) V	(25) —

Pin	Size	Color	Circuit	Terminal Type ID	Option	Function	Pin	Size	Color	Circuit	Terminal Type ID	Option
26 - 29	—	—	—	—	—	Not Occupied	26 - 29	—	—	—	—	—
(30) 30	(30) 0.35	(30) WH / GN	(30) 59 66	(30) I	(30) —	(30) Approach Lamp Control	(30) 30	(30) 0.5	(30) WH / GN	(30) 59 66	(30) V	(30) —
31 - 35	—	—	—	—	—	Not Occupied	31 - 35	—	—	—	—	—
(36) 36	(36) 0.35	(36) GY / VT	(36) 26 76	(36) I	(36) —	(36) Right Front Door Exterior Switch Unlock Signal	(36) 36	(36) 0.35	(36) GY / VT	(36) 26 76	(36) V	(36) —
37 - 38	—	—	—	—	—	Not Occupied	37 - 38	—	—	—	—	—
(39) 39	(39) 0	(39) Coax Cable	(39) 47 24	(39) IV	(39) —	(39) Right Sideview Camera LVDS (Low Voltage Differential Signaling) Coaxial Signal	(39) 39	(39) 0	(39) Coax Cable	(39) 47 24	(39) VII	(39) —
40 - 46	—	—	—	—	—	Not Occupied	40 - 46	—	—	—	—	—
(47) 47	(47) 2.5	(47) BK	(47) 12 50	(47) III	(47) —	(47) Ground	(47) 47	(47) 2.5	(47) BK	(47) 12 50	(47) VI	(47) —
(48) 48	(48) 2.5	(48) RD / BN	(48) 42 40	(48) III	(48) —	(48) Battery Positive Voltage	(48) 48	(48) 2.5	(48) RD / BN	(48) 42 40	(48) VI	(48) —

X602 Body Wiring Harness to Body Rear Wiring Harness Extension Harness

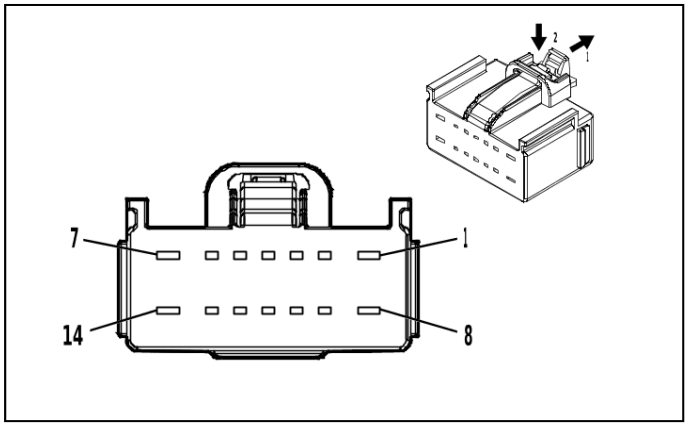

4934172

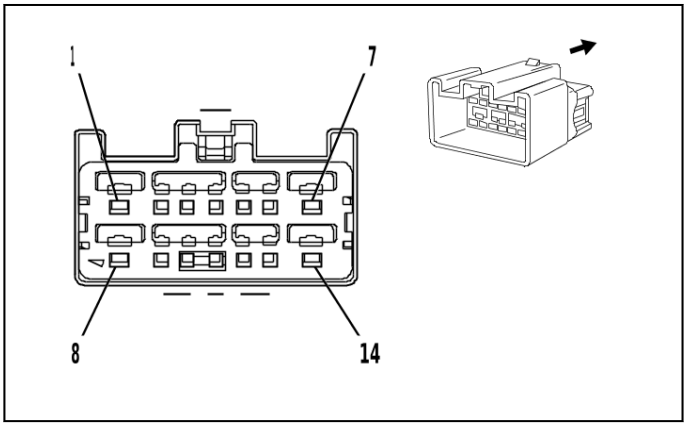

1283905

Connector Part Information

- Harness Type: Body Wiring Harness
- OEM Connector: 7289-7630-30
- Service Connector: 13513604
- Description: 14-Way F 1.5, 2.8 YESC Series(BK)

Connector Part Information

- Harness Type: Body Rear Wiring Harness Extension Harness
- OEM Connector: 7282-6447-40
- Service Connector: Service by Harness - See Part Catalog
- Description: 14-Way M 1.5, 2.8 YESC Series(L-GY)

Terminal Part Information

Terminal Type ID	Terminated Lead	Diagnostic Test Probe	Terminal Removal Tool
I	13575850	J-35616-2A (GY)	J-38125-557
II	84962855	J-35616-4A (PU)	J-38125-11A
III	Not required	J-35616-3 (GY)	No Tool Required
IV	Not required	J-35616-5 (PU)	No Tool Required

X602 Body Wiring Harness to Body Rear Wiring Harness Extension Harness

Pin	Size	Color	Circuit	Terminal Type ID	Option	Function	Pin	Size	Color	Circuit	Terminal Type ID	Option
(1) 1	(1) 0.75	(1) BK	(1) 10117	(1) II	(1) —	(1) AC Outlet Phase A Control	(1) 1	(1) 0.75	(1) BN	(1) 10117	(1) IV	(1) —
(2) 2	(2) 0.5	(2) VT / RD	(2) 4049	(2) I	(2) —	(2) AC Power Outlet Sensor High Reference	(2) 2	(2) 0.5	(2) VT / RD	(2) 4049	(2) III	(2) —
(3) 3	(3) 0.5	(3) VT / WH	(3) 1139	(3) I	(3) —	(3) Run/ Crank Ignition 1 Voltage	(3) 3	(3) 0.5	(3) VT / WH	(3) 1139	(3) III	(3) —
(4) 4	(4) 0.5	(4) WH / GN	(4) 4628	(4) I	(4) —	(4) DC/AC Inverter Relay Control	(4) 4	(4) 0.5	(4) WH / GN	(4) 4628	(4) III	(4) —
(5) 5	(5) 0.75	(5) BU / BN	(5) 6807	(5) I	(5) —	(5) DC/AC Inverter Control	(5) 5	(5) 0.5	(5) BU / BN	(5) 6807	(5) III	(5) —
6	—	—	—	—	—	Not Occupied	6	—	—	—	—	—
(7) 7	(7) 0.5	(7) BK / WH	(7) 10120	(7) II	(7) —	(7) AC Outlet 2 Phase A Control	(7) 7	(7) 0.5	(7) BN / WH	(7) 10120	(7) IV	(7) —
(8) 8	(8) 0.75	(8) RD	(8) 10118	(8) II	(8) —	(8) AC Outlet Phase B Control	(8) 8	(8) 0.75	(8) BU	(8) 10118	(8) IV	(8) —
(9) 9	(9) 0.5	(9) BARE	(9) 10116	(9) I	(9) —	(9) AC Outlet Low Reference	(9) 9	(9) 0.5	(9) BARE	(9) 10116	(9) III	(9) —
(10) 10	(10) 0.35 (10) 0.5	(10) GN / BU (10) GN / BU	(10) 6133 (10) 6133	(10) I (10) I	(10) - UTJ / UTR (10) UTJ & UTR	(10) Body Control Module LIN Bus 2 (10) Body Control Module LIN Bus 2	(10) 10	(10) 0.5	(10) GN / BU	(10) 6133	(10) III	(10) —
11	—	—	—	—	—	Not Occupied	11	—	—	—	—	—
(12) 12	(12) 0.75	(12) GN / BN	(12) 2266	(12) I	(12) —	(12) DC/AC Inverter Control 2	(12) 12	(12) 0.5	(12) GN / BN	(12) 2266	(12) III	(12) —
(13) 13	(13) 0.5	(13) BARE	(13) 10119	(13) I	(13) —	(13) AC Outlet 2 Low Reference	(13) 13	(13) 0.5	(13) BARE	(13) 10119	(13) III	(13) —
(14) 14	(14) 0.5	(14) RD / WH	(14) 10121	(14) II	(14) —	(14) AC Outlet 2 Phase B Control	(14) 14	(14) 0.5	(14) BU / WH	(14) 10121	(14) IV	(14) —

X604A Engine Wiring Harness to Aeroshutter Jumper Wiring Harness

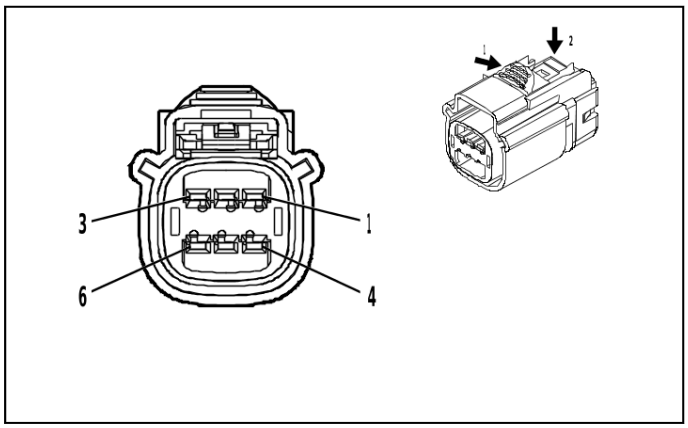

5004419

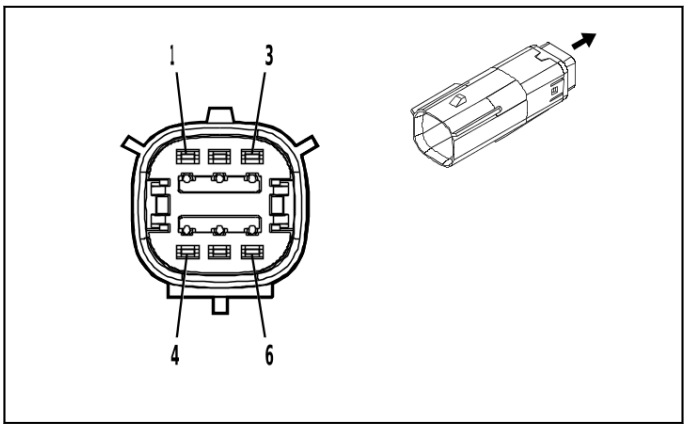

5019118

Connector Part Information

- Harness Type: Engine Wiring Harness
- OEM Connector: 15513504
- Service Connector: 84999473
- Description: 6-Way F 1.5 OCS Series, Sealed(BK)

Connector Part Information

- Harness Type: Aeroshutter Jumper Wiring Harness
- OEM Connector: Not Available
- Service Connector: Service by Harness - See Part Catalog
- Description: 6-Way M (BK)

Terminal Part Information

Terminal Type ID	Terminated Lead	Diagnostic Test Probe	Terminal Removal Tool
I	Not required	J-35616-2A (GY)	No Tool Required
II	Not required	No Tool Required	No Tool Required

X604A Engine Wiring Harness to Aeroshutter Jumper Wiring Harness

Pin	Size	Color	Circuit	Terminal Type ID	Option	Function	Pin	Size	Color	Circuit	Terminal Type ID	Option
(1) 1	(1) 0.5	(1) GN / VT	(1) 4621	(1) I	(1) —	(1) Engine Control Module LIN Bus 1	(1) 1	(1) 0.5	(1) GN / VT	(1) 4621	(1) II	(1) —
(2) 2	(2) 0.75	(2) BK	(2) 6550	(2) I	(2) —	(2) Ground	(2) 2	(2) 0.75	(2) BK	(2) 6550	(2) II	(2) —
(3) 3	(3) 0.5	(3) VT / BU	(3) 5705	(3) I	(3) —	(3) Powertrain Main Relay Control	(3) 3	(3) 0.5	(3) VT / BU	(3) 5705	(3) II	(3) —
4	—	—	—	—	—	Not Occupied	4	—	—	—	—	—
(5) 5	(5) 0.5	(5) BU / GY	(5) 636	(5) I	(5) —	(5) Ambient Air Temperature Sensor Signal	(5) 5	(5) 0.5	(5) BU / GY	(5) 636	(5) II	(5) —
(6) 6	(6) 0.5	(6) BK / GY	(6) 626	(6) I	(6) —	(6) Engine Control Vehicle Sensors Low Reference 1	(6) 6	(6) 0.5	(6) BK / GY	(6) 626	(6) II	(6) —

X604B Aeroshutter Extension Wiring Harness to Aeroshutter Jumper Wiring Harness (WMI)

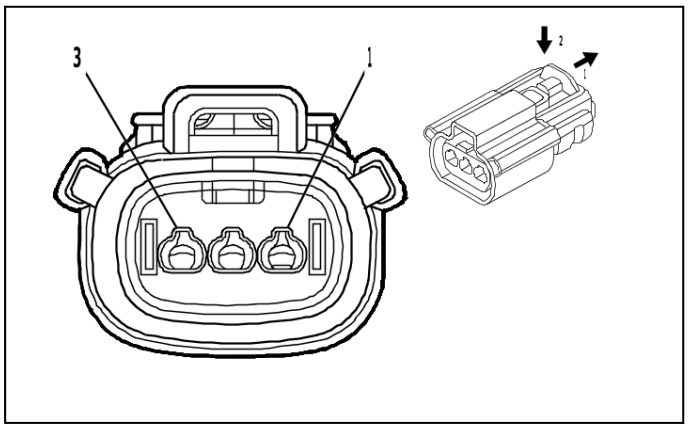

5095610

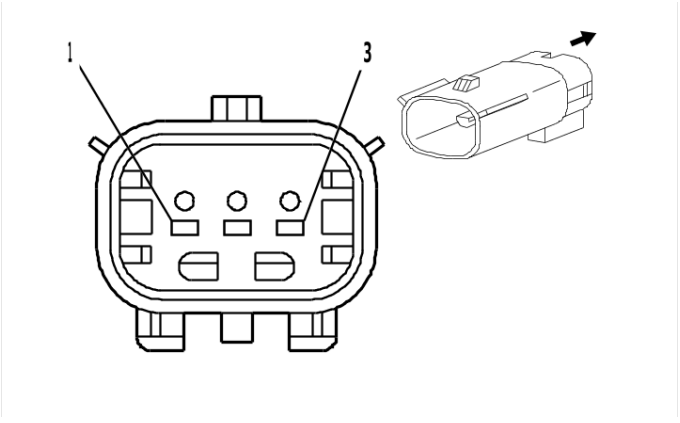

1870038

Connector Part Information
- Harness Type: Aeroshutter Extension Wiring Harness
- OEM Connector: 13526813
- Service Connector: Service by Harness - See Part Catalog
- Description: 3-Way F 1.5 Series, Sealed(BK)

Connector Part Information
- Harness Type: Aeroshutter Jumper Wiring Harness
- OEM Connector: 13526822
- Service Connector: Service by Harness - See Part Catalog
- Description: 3-Way M 1.5 MX Series, Sealed(BK)

Terminal Part Information

Terminal Type ID	Terminated Lead	Diagnostic Test Probe	Terminal Removal Tool
I	Not required	No Tool Required	No Tool Required
II	Not required	No Tool Required	No Tool Required

X604B Aeroshutter Extension Wiring Harness to Aeroshutter Jumper Wiring Harness (WMI)

Pin	Size	Color	Circuit	Terminal Type ID	Option	Function	Pin	Size	Color	Circuit	Terminal Type ID	Option
(1) 1	(1) 0.5	(1) VT / BU	(1) 5705	(1) I	(1) —	(1) Powertrain Main Relay Control	(1) 1	(1) 0.5	(1) VT / BU	(1) 5705	(1) II	(1) —
(2) 2	(2) 0.45	(2) GN / VT	(2) 4621	(2) I	(2) —	(2) Engine Control Module LIN Bus 1	(2) 2	(2) 0.75	(2) GN / VT	(2) 4621	(2) II	(2) —
(3) 3	(3) 0.5	(3) BK	(3) 6550	(3) I	(3) —	(3) Ground	(3) 3	(3) 0.5	(3) BK	(3) 6550	(3) II	(3) —

X605 Front Side Door Door Wiring Harness - Passenger to Front Side Door Door Lock Door Wiring Harness - Passenger

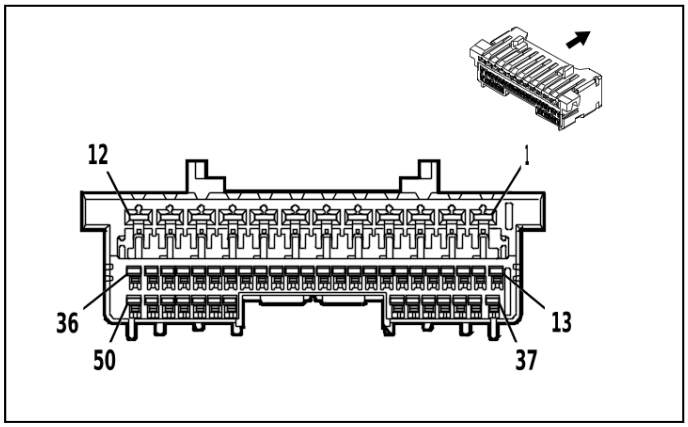

4997556

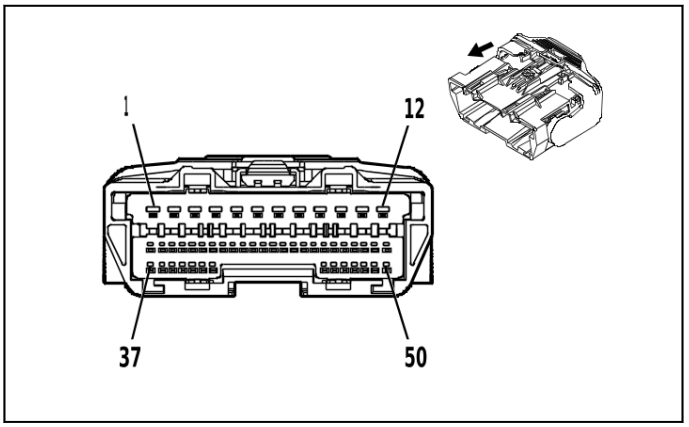

5022037

Connector Part Information

- Harness Type: Front Side Door Door Wiring Harness - Passenger
- OEM Connector: 35283943
- Service Connector: Service by Harness - See Part Catalog
- Description: 50-Way F 1.2, 2.8 OCS Series(BK)

Connector Part Information

- Harness Type: Front Side Door Door Lock Door Wiring Harness - Passenger
- OEM Connector: 33390111
- Service Connector: Service by Harness - See Part Catalog
- Description: 50-Way M 1.2, 2.8 OCS Series(BK)

Terminal Part Information

Terminal Type ID	Terminated Lead	Diagnostic Test Probe	Terminal Removal Tool
I	Not required	J-35616-12 (BU)	No Tool Required
II	Not required	J-35616-16 (L-GN)	No Tool Required
III	Not required	J-35616-4A (PU)	No Tool Required
IV	Not required	J-35616-13 (BU)	No Tool Required
V	Not required	J-35616-17 (L-GN)	No Tool Required
VI	Not required	J-35616-5 (PU)	No Tool Required

X605 Front Side Door Door Wiring Harness - Passenger to Front Side Door Door Lock Door Wiring Harness - Passenger

Pin	Size	Color	Circuit	Terminal Type ID	Option	Function	Pin	Size	Color	Circuit	Terminal Type ID	Option
1 - 2	—	—	—	—	—	Not Occupied	1 - 2	—	—	—	—	—
(3) 3	(3) 0.35	(3) BN / VT	(3) 607	(3) III	(3) —	(3) Right Outside Rearview Mirror Heater Control	(3) 3	(3) 0.35	(3) BN / VT	(3) 607	(3) VI	(3) —
4	—	—	—	—	—	Not Occupied	4	—	—	—	—	—
(5) 5	(5) 0.35	(5) VT	(5) 4259	(5) III	(5) —	(5) Right Front Door Lock Status Signal	(5) 5	(5) 0.35	(5) VT	(5) 4259	(5) VI	(5) —
6	—	—	—	—	—	Not Occupied	6	—	—	—	—	—
(7) 7	(7) 0.35	(7) VT / GY	(7) 2765	(7) III	(7) —	(7) Window Switch Right Front Express Signal	(7) 7	(7) 0.35	(7) VT / GY	(7) 2765	(7) VI	(7) —

Pin	Size	Color	Circuit	Terminal Type ID	Option	Function	Pin	Size	Color	Circuit	Terminal Type ID	Option
(8) 8	(8) 0.35	(8) YE / WH	(8) 2793	(8) III	(8) —	(8) Right Front Mirror Motor Fold Out Control	(8) 8	(8) 0.35	(8) YE / WH	(8) 2793	(8) VI	(8) —
(9) 9	(9) 0.35	(9) BU / GY	(9) 2794	(9) III	(9) —	(9) Right Front Mirror Motor Fold In Control	(9) 9	(9) 0.35	(9) BU / GY	(9) 2794	(9) VI	(9) —
(10) 10	(10) 0.35	(10) BU / YE	(10) 2795	(10) III	(10) —	(10) Right Front Mirror Position Sensor Up [+] Down [-] Signal	(10) 10	(10) 0.35	(10) BU / YE	(10) 2795	(10) VI	(10) —
(11) 11	(11) 0.35	(11) YE / VT	(11) 2796	(11) III	(11) —	(11) Right Front Mirror Motor Up [+] Down [-] Control	(11) 11	(11) 0.35	(11) YE / VT	(11) 2796	(11) VI	(11) —
(12) 12	(12) 0.35	(12) WH	(12) 2797	(12) III	(12) —	(12) Right Front Mirror Motor Common Control	(12) 12	(12) 0.35	(12) WH	(12) 2797	(12) VI	(12) —
(13) 13	(13) 0.35	(13) GN / BK	(13) 2798	(13) I	(13) —	(13) Right Front Mirror Motor Right [+] Left [-] Control	(13) 13	(13) 0.35	(13) GN / BK	(13) 2798	(13) IV	(13) —
(14) 14	(14) 0.35	(14) YE / RD	(14) 2799	(14) I	(14) —	(14) Right Front Mirror Position Sensor High Reference	(14) 14	(14) 0.35	(14) YE / RD	(14) 2799	(14) IV	(14) —
(15) 15	(15) 0.35	(15) VT / WH	(15) 2800	(15) I	(15) —	(15) Right Front Mirror Position Sensor Left [-] Right [+] Signal	(15) 15	(15) 0.35	(15) VT / WH	(15) 2800	(15) IV	(15) —
(16) 16	(16) 0.35	(16) BK / GN	(16) 675	(16) I	(16) —	(16) Right Outside Rearview Mirror Position Sensor Low Reference	(16) 16	(16) 0.35	(16) BK / GN	(16) 675	(16) IV	(16) —
(17) 17	(17) 0.35	(17) GN	(17) 1184	(17) I	(17) —	(17) Window Switch Right Front Up Signal	(17) 17	(17) 0.35	(17) GN	(17) 1184	(17) IV	(17) —
(18) 18	(18) 0.5	(18) BK	(18) 1250	(18) II	(18) —	(18) Ground	(18) 18	(18) 0.35	(18) BK	(18) 1250	(18) IV	(18) —
(19) 19	(19) 0.5	(19) RD / BU	(19) 5240	(19) II	(19) —	(19) Battery Positive Voltage	(19) 19	(19) 0.5	(19) RD / BU	(19) 5240	(19) V	(19) —
(20) 20	(20) 0.35	(20) BN	(20) 5295	(20) I	(20) —	(20) Window Switch Right Front Down Signal	(20) 20	(20) 0.35	(20) BN	(20) 5295	(20) IV	(20) —

Pin	Size	Color	Circuit	Terminal Type ID	Option	Function	Pin	Size	Color	Circuit	Terminal Type ID	Option
(21) 21	(21) 0.35	(21) G N / YE	(21) 61 34	(21) I	(21) —	(21) Body Control Module LIN Bus 3	(21) 21	(21) 0.35	(21) G N / YE	(21) 61 34	(21) IV	(21) —
(22) 22	(22) 0.35	(22) G Y	(22) 17 61	(22) I	(22) —	(22) Right Side Object Detection LED Control	(22) 22	(22) 0.35	(22) G Y	(22) 17 61	(22) IV	(22) —
23 - 50	—	—	—	—	—	Not Occupied	23 - 50	—	—	—	—	—

X700 Rear Side Door Door Wiring Harness - Left to Body Wiring Harness

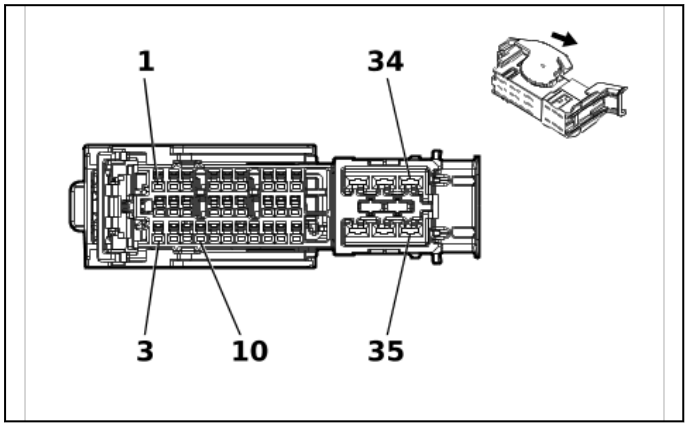

6425511

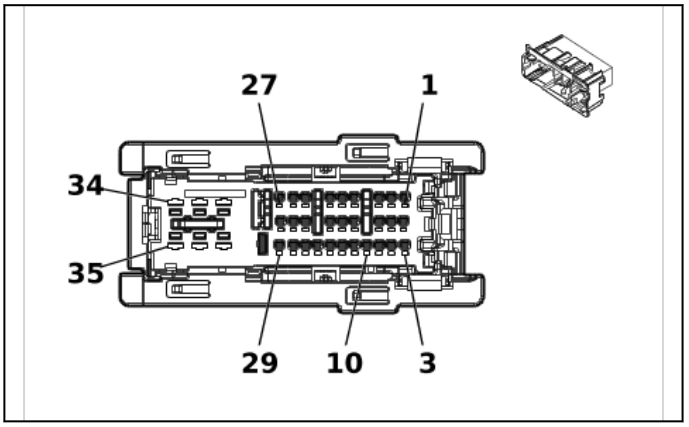

6423948

Connector Part Information
- Harness Type: Rear Side Door Door Wiring Harness - Left
- OEM Connector: 6099-0202
- Service Connector: Service by Harness - See Part Catalog
- Description: 35-Way F 1.2 MCON, 2.8 YESC Series(BK)

Connector Part Information
- Harness Type: Body Wiring Harness
- OEM Connector: 6099-0197
- Service Connector: 13550105
- Description: 35-Way M 1.2 MCON, 2.8 YESC Series(BK)

Terminal Part Information

Terminal Type ID	Terminated Lead	Diagnostic Test Probe	Terminal Removal Tool
I	Not required	J-35616-12 (BU)	No Tool Required
II	Not required	J-35616-16 (L-GN)	No Tool Required
III	Not required	J-35616-4A (PU)	No Tool Required
IV	84616651	J-35616-13 (BU)	J-38125-215A
V	84888592	J-35616-5 (PU)	J-38125-11A

X700 Rear Side Door Door Wiring Harness - Left to Body Wiring Harness

Pin	Size	Color	Circuit	Terminal Type ID	Option	Function	Pin	Size	Color	Circuit	Terminal Type ID	Option
(3) 3	(3) 0. 75	(3) W H / BU	(3) 326 6	(3) II	(3) —	(3) Child Security Lock Motor Lock Control	(3) 3	(3) 0. 75	(3) W H / BU	(3) 326 6	(3) IV	(3) —
(10) 10	(10) 0.5	(10) V T	(10) 43 01	(10) II	(10) —	(10) Passive Entry Left Antenna Signal High	(10) 10	(10) 0.35	(10) V T	(10) 43 01	(10) IV	(10) —

Pin	Size	Color	Circuit	Terminal Type ID	Option	Function	Pin	Size	Color	Circuit	Terminal Type ID	Option
(12) 12	(12) 0.35	(12) VT / BU	(12) 40 01	(12) I	(12) —	(12) Left Rear Door Lock Switch Lock Control	(12) 12	(12) 0.35	(12) VT / BU	(12) 40 01	(12) IV	(12) —
(13) 13	(13) 0.5	(13) VT / GY	(13) 43 02	(13) II	(13) —	(13) Passive Entry Left Antenna Signal Low	(13) 13	(13) 0.35	(13) VT / WH	(13) 43 02	(13) IV	(13) —
(15) 15	(15) 0.35	(15) WH / YE	(15) 40 02	(15) I	(15) —	(15) Left Rear Door Lock Switch Unlock Control	(15) 15	(15) 0.35	(15) WH / YE	(15) 40 02	(15) IV	(15) —
(18) 18	(18) 0.35	(18) WH / VT	(18) 49 94	(18) I	(18) —	(18) Left Rear Door Exterior Switch Unlock Signal	(18) 18	(18) 0.35	(18) WH / VT	(18) 49 94	(18) IV	(18) —
(21) 21	(21) 0.35	(21) GN / GY	(21) 61 35	(21) I	(21) —	(21) Body Control Module LIN Bus 4	(21) 21	(21) 0.35	(21) GN / GY	(21) 61 35	(21) IV	(21) —
(22) 22	(22) 0.5	(22) YE	(22) 68 17	(22) II	(22) —	(22) LED Backlight Dimming Control 1	(22) 22	(22) 0.5	(22) YE	(22) 68 17	(22) IV	(22) —
(23) 23	(23) 0.35	(23) VT / WH	(23) 66 75	(23) I	(23) —	(23) Left Rear Door Lock Indicator Control	(23) 23	(23) 0.35	(23) VT / WH	(23) 66 75	(23) IV	(23) —
(24) 24	(24) 0.75	(24) GN / BK	(24) 11 6	(24) II	(24) —	(24) Left Rear Speaker [-] Control	(24) 24	(24) 0.75	(24) GN / BK	(24) 11 6	(24) IV	(24) —
(25) 25	(25) 0.35	(25) BN / WH	(25) 32 69	(25) I	(25) —	(25) Child Security Lock Actuator Status Signal Left Rear	(25) 25	(25) 0.35	(25) BN / WH	(25) 32 69	(25) IV	(25) —
(26) 26	(26) 0.35	(26) WH / YE	(26) 75 57	(26) I	(26) —	(26) Interior Door Handle Accent Lighting Control	(26) 26	(26) 0.35	(26) WH / YE	(26) 75 57	(26) IV	(26) —
(27) 27	(27) 0.75	(27) GN	(27) 19 9	(27) II	(27) —	(27) Left Rear Speaker [+] Control	(27) 27	(27) 0.75	(27) GN	(27) 19 9	(27) IV	(27) —
(29) 29	(29) 0.75	(29) BU / YE	(29) 10 91	(29) II	(29) —	(29) Left Rear Door Lock Actuator Lock Control	(29) 29	(29) 0.75	(29) BU / YE	(29) 10 91	(29) IV	(29) —
(30) 30	(30) 2.5	(30) RD / GY	(30) 35 40	(30) III	(30) —	(30) Battery Positive Voltage	(30) 30	(30) 2.5	(30) RD / GY	(30) 35 40	(30) V	(30) —
(31) 31	(31) 2.5	(31) BK	(31) 11 50	(31) III	(31) —	(31) Ground	(31) 31	(31) 2.5	(31) BK	(31) 11 50	(31) V	(31) —
(32) 32	(32) 0.75	(32) WH	(32) 26 79	(32) III	(32) —	(32) Lock Actuators Unlock Control 1	(32) 32	(32) 0.75	(32) WH	(32) 26 79	(32) V	(32) —

X705 Rear Side Door Door Wiring Harness - Left to Rear Side Door Door Lock Door Wiring Harness - Left

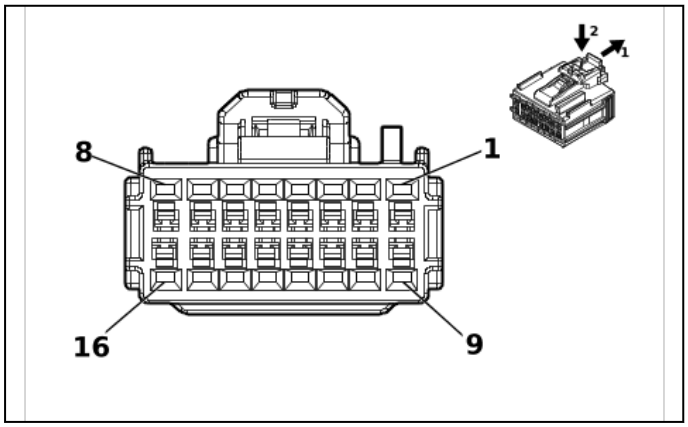

6074391

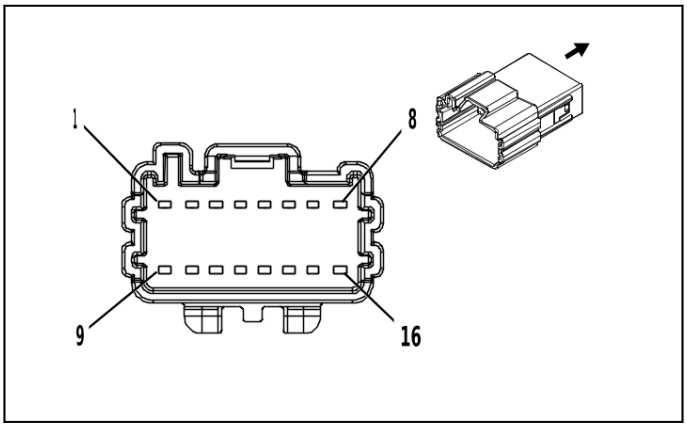

4223086

Connector Part Information

- Harness Type: Rear Side Door Door Wiring Harness - Left
- OEM Connector: 6098-9012
- Service Connector: Service by Harness - See Part Catalog
- Description: 16-Way F 1.2 MCON Series(BK)

Connector Part Information

- Harness Type: Rear Side Door Door Lock Door Wiring Harness - Left
- OEM Connector: 6098-8828
- Service Connector: Service by Harness - See Part Catalog
- Description: 16-Way M 1.2 Series(BK)

Terminal Part Information

Terminal Type ID	Terminated Lead	Diagnostic Test Probe	Terminal Removal Tool
I	Not required	J-35616-12 (BU)	No Tool Required
II	Not required	J-35616-16 (L-GN)	No Tool Required
III	Not required	J-35616-13 (BU)	No Tool Required

X705 Rear Side Door Door Wiring Harness - Left to Rear Side Door Door Lock Door Wiring Harness - Left

Pin	Size	Color	Circuit	Terminal Type ID	Option	Function	Pin	Size	Color	Circuit	Terminal Type ID	Option
(1) 1	(1) 0.5	(1) YE	(1) 6817	(1) II	(1) —	(1) LED Backlight Dimming Control 1	(1) 1	(1) 0.35	(1) YE	(1) 6817	(1) III	(1) —
2	—	—	—	—	—	Not Occupied	2	—	—	—	—	—
(3) 3	(3) 0.35	(3) VT / WH	(3) 6675	(3) I	(3) —	(3) Left Rear Door Lock Indicator Control	(3) 3	(3) 0.35	(3) VT / WH	(3) 6675	(3) III	(3) —
(4) 4	(4) 0.35	(4) VT / BU	(4) 4001	(4) I	(4) —	(4) Left Rear Door Lock Switch Lock Control	(4) 4	(4) 0.35	(4) VT / BU	(4) 4001	(4) III	(4) —
(5) 5	(5) 0.35	(5) W H / YE	(5) 4002	(5) I	(5) —	(5) Left Rear Door Lock Switch Unlock Control	(5) 5	(5) 0.35	(5) W H / YE	(5) 4002	(5) III	(5) —
(6) 6	(6) 0.35	(6) W H / YE	(6) 7557	(6) I	(6) —	(6) Interior Door Handle Accent Lighting Control	(6) 6	(6) 0.35	(6) W H / YE	(6) 7557	(6) III	(6) —

Pin	Size	Color	Circuit	Terminal Type ID	Option	Function	Pin	Size	Color	Circuit	Terminal Type ID	Option
7 - 11	—	—	—	—	—	Not Occupied	7 - 11	—	—	—	—	—
(12) 12	(12) 0.75	(12) B K	(12) 11 50	(12) II	(12) —	(12) Ground	(12) 12	(12) 0.35	(12) B K	(12) 11 50	(12) III	(12) —
13 - 14	—	—	—	—	—	Not Occupied	13 - 14	—	—	—	—	—
(15) 15	(15) 0.35	(15) G N / BU	(15) 46 48	(15) I	(15) —	(15) Left Rear Door Lock Status Signal	(15) 15	(15) 0.35	(15) G N / BU	(15) 46 48	(15) III	(15) —
16	—	—	—	—	—	Not Occupied	16	—	—	—	—	—

X706 Rear Side Door Door Wiring Harness - Left to Rear Side Door Door Lock Door Wiring Harness - Left

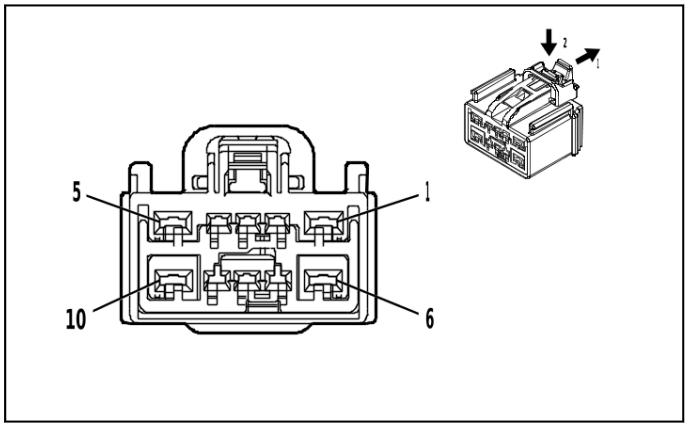

5020939

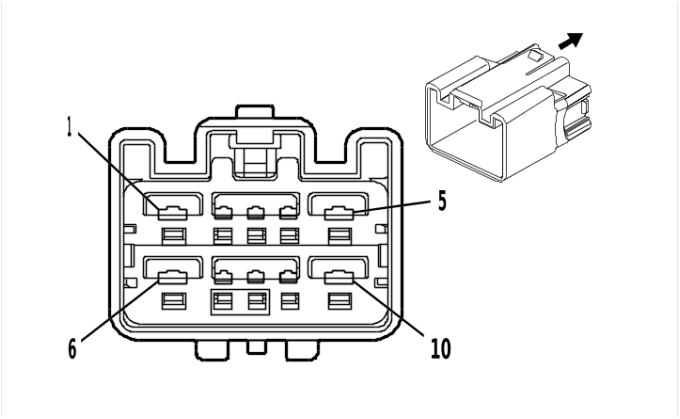

1851890

Connector Part Information
- Harness Type: Rear Side Door Door Wiring Harness - Left
- OEM Connector: 7289-9153-40
- Service Connector: Service by Harness - See Part Catalog
- Description: 10-Way F 1.5, 2.8 Kaizen Series(L-GY)

Connector Part Information
- Harness Type: Rear Side Door Door Lock Door Wiring Harness - Left
- OEM Connector: 7282-6459-40
- Service Connector: Service by Harness - See Part Catalog
- Description: 10-Way M 1.5, 2.8 Kaizen Series(L-GY)

Terminal Part Information

Terminal Type ID	Terminated Lead	Diagnostic Test Probe	Terminal Removal Tool
I	Not required	J-35616-14 (GN)	No Tool Required
II	Not required	J-35616-4A (PU)	No Tool Required
III	Not required	J-35616-3 (GY)	No Tool Required
IV	Not required	J-35616-5 (PU)	No Tool Required

X706 Rear Side Door Door Wiring Harness - Left to Rear Side Door Door Lock Door Wiring Harness - Left

Pin	Size	Color	Circuit	Terminal Type ID	Option	Function	Pin	Size	Color	Circuit	Terminal Type ID	Option
(1) 1	(1) 2. 5	(1) RD / GY	(1) 354 0	(1) II	(1) —	(1) Battery Positive Volt- age	(1) 1	(1) 2. 5	(1) RD / GY	(1) 354 0	(1) IV	(1) —
2	—	—	—	—	—	Not Occupied	2	—	—	—	—	—

Pin	Size	Color	Circuit	Terminal Type ID	Option	Function	Pin	Size	Color	Circuit	Terminal Type ID	Option
(3) 3	(3) 0.35	(3) GN / GY	(3) 6135	(3) I	(3) —	(3) Body Control Module LIN Bus 4	(3) 3	(3) 0.35	(3) GN / GY	(3) 6135	(3) III	(3) —
(4) 4	(4) 0.35	(4) GY	(4) 747	(4) I	(4) —	(4) Left Rear Door Ajar Switch Signal	(4) 4	(4) 0.35	(4) GY	(4) 747	(4) III	(4) —
(5) 5	(5) 2	(5) BU / VT	(5) 668	(5) II	(5) —	(5) Left Rear Window Motor Up Control	(5) 5	(5) 2	(5) BU / VT	(5) 668	(5) IV	(5) —
(6) 6	(6) 2.5	(6) BK	(6) 1150	(6) II	(6) —	(6) Ground	(6) 6	(6) 2.5	(6) BK	(6) 1150	(6) IV	(6) —
7 - 9	—	—	—	—	—	Not Occupied	7 - 9	—	—	—	—	—
(10) 10	(10) 2	(10) YE / BU	(10) 669	(10) II	(10) —	(10) Left Rear Window Motor Down Control	(10) 10	(10) 2	(10) YE / BU	(10) 669	(10) IV	(10) —

X800 Rear Side Door Door Wiring Harness - Right to Body Wiring Harness

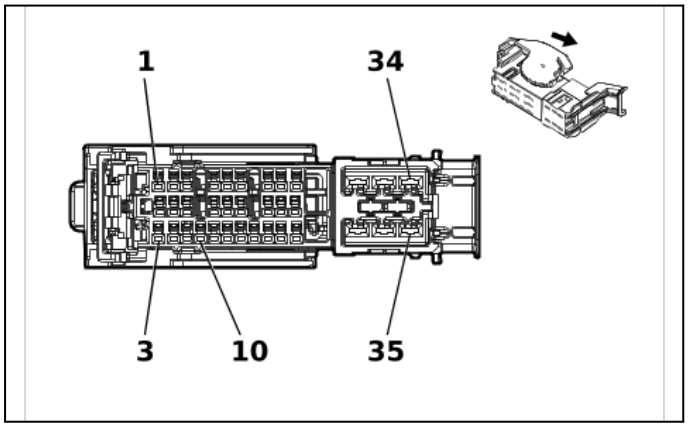

6425511

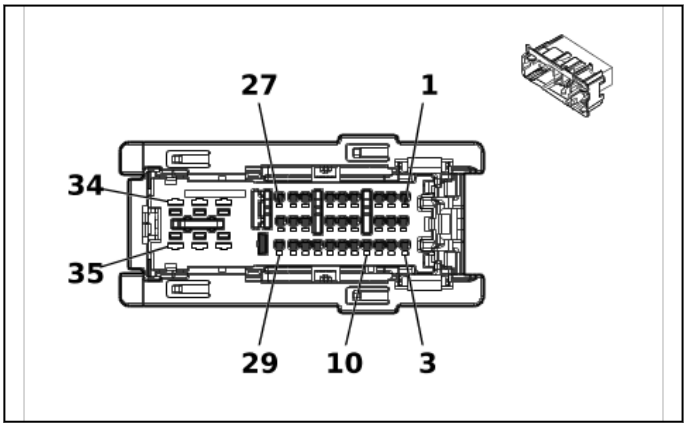

6423948

Connector Part Information

- Harness Type: Rear Side Door Door Wiring Harness - Right
- OEM Connector: 6099-0202
- Service Connector: Service by Harness - See Part Catalog
- Description: 35-Way F 1.2 MCON, 2.8 YESC Series(BK)

Connector Part Information

- Harness Type: Body Wiring Harness
- OEM Connector: 6099-0197
- Service Connector: 13550105
- Description: 35-Way M 1.2 MCON, 2.8 YESC Series(BK)

Terminal Part Information

Terminal Type ID	Terminated Lead	Diagnostic Test Probe	Terminal Removal Tool
I	Not required	J-35616-12 (BU)	No Tool Required
II	Not required	J-35616-16 (L-GN)	No Tool Required
III	Not required	J-35616-4A (PU)	No Tool Required
IV	84616651	J-35616-13 (BU)	J-38125-215A
V	84888592	J-35616-5 (PU)	J-38125-11A

X800 Rear Side Door Door Wiring Harness - Right to Body Wiring Harness

Pin	Size	Color	Circuit	Terminal Type ID	Option	Function	Pin	Size	Color	Circuit	Terminal Type ID	Option
(3) 3	(3) 0.75	(3) WH / BU	(3) 3266	(3) II	(3) —	(3) Child Security Lock Motor Lock Control	(3) 3	(3) 0.75	(3) WH / BU	(3) 3266	(3) IV	(3) —
(10) 10	(10) 0.5	(10) GN / YE	(10) 4303	(10) II	(10) —	(10) Passive Entry Right Antenna Signal High	(10) 10	(10) 0.35	(10) GN / YE	(10) 4303	(10) IV	(10) —
(12) 12	(12) 0.35	(12) GN / BN	(12) 4003	(12) I	(12) —	(12) Right Rear Door Lock Switch Lock Control	(12) 12	(12) 0.35	(12) GN / BN	(12) 4003	(12) IV	(12) —
(13) 13	(13) 0.5	(13) GN / BK	(13) 4304	(13) II	(13) —	(13) Passive Entry Right Antenna Signal Low	(13) 13	(13) 0.35	(13) GN / BK	(13) 4304	(13) IV	(13) —
(15) 15	(15) 0.35	(15) BU / GY	(15) 4004	(15) I	(15) —	(15) Right Rear Door Lock Switch Unlock Control	(15) 15	(15) 0.35	(15) BU / GY	(15) 4004	(15) IV	(15) —
(18) 18	(18) 0.35	(18) GY / BU	(18) 4995	(18) I	(18) —	(18) Right Rear Door Exterior Switch Unlock Signal	(18) 18	(18) 0.35	(18) GY / BU	(18) 4995	(18) IV	(18) —
(21) 21	(21) 0.35	(21) GN / GY	(21) 6135	(21) I	(21) —	(21) Body Control Module LIN Bus 4	(21) 21	(21) 0.35	(21) GN / GY	(21) 6135	(21) IV	(21) —
(22) 22	(22) 0.5	(22) YE	(22) 6817	(22) II	(22) —	(22) LED Backlight Dimming Control 1	(22) 22	(22) 0.5	(22) YE	(22) 6817	(22) IV	(22) —
(23) 23	(23) 0.35	(23) YE / BK	(23) 6677	(23) I	(23) —	(23) Right Rear Door Lock Indicator Control	(23) 23	(23) 0.35	(23) YE / BK	(23) 6677	(23) IV	(23) —
(24) 24	(24) 0.75	(24) BU / BK	(24) 115	(24) II	(24) —	(24) Right Rear Speaker [-] Control	(24) 24	(24) 0.75	(24) BU / BK	(24) 115	(24) IV	(24) —
(25) 25	(25) 0.35	(25) GY / BK	(25) 3268	(25) I	(25) —	(25) Child Security Lock Actuator Status Signal Right Rear	(25) 25	(25) 0.35	(25) GY / BK	(25) 3268	(25) IV	(25) —
(26) 26	(26) 0.35	(26) WH / YE	(26) 7557	(26) I	(26) —	(26) Interior Door Handle Accent Lighting Control	(26) 26	(26) 0.35	(26) WH / YE	(26) 7557	(26) IV	(26) —
(27) 27	(27) 0.75	(27) WH	(27) 46	(27) II	(27) —	(27) Right Rear Speaker [+] Control	(27) 27	(27) 0.75	(27) WH	(27) 46	(27) IV	(27) —
(29) 29	(29) 0.75	(29) VT / WH	(29) 1094	(29) II	(29) —	(29) Right Rear Door Lock Actuator Lock Control	(29) 29	(29) 0.75	(29) VT / WH	(29) 1094	(29) IV	(29) —

Pin	Size	Color	Circuit	Terminal Type ID	Option	Function	Pin	Size	Color	Circuit	Terminal Type ID	Option
(30) 30	(30) 2.5	(30) R D / BN	(30) 42 40	(30) III	(30) —	(30) Battery Positive Voltage	(30) 30	(30) 2.5	(30) R D / BN	(30) 42 40	(30) V	(30) —
(31) 31	(31) 2.5	(31) B K	(31) 12 50	(31) III	(31) —	(31) Ground	(31) 31	(31) 2.5	(31) B K	(31) 12 50	(31) V	(31) —
(32) 32	(32) 0.75	(32) G Y / BK	(32) 26 80	(32) III	(32) —	(32) Lock Actuators Unlock Control 2	(32) 32	(32) 0.75	(32) G Y / BK	(32) 26 80	(32) V	(32) —

X805 Rear Side Door Door Wiring Harness - Right to Rear Side Door Door Lock Door Wiring Harness - Right

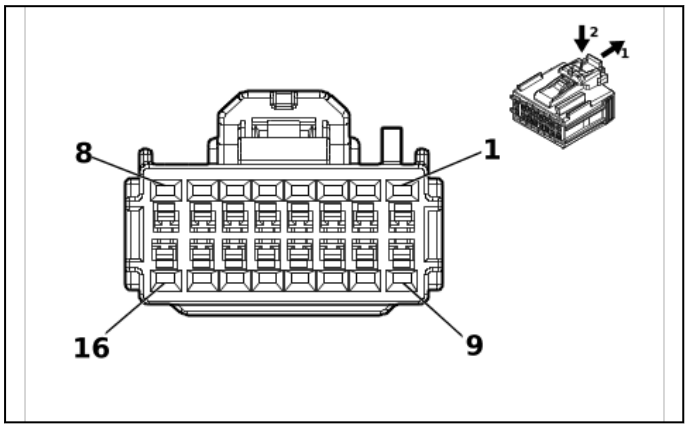

6074391

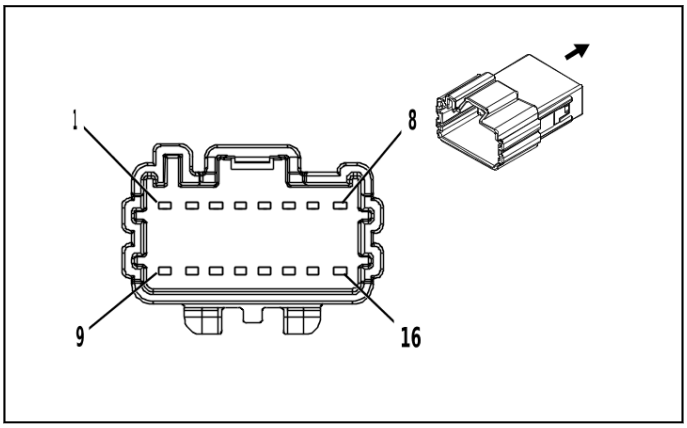

4223086

Connector Part Information
- Harness Type: Rear Side Door Door Wiring Harness - Right
- OEM Connector: 6098-9012
- Service Connector: Service by Harness - See Part Catalog
- Description: 16-Way F 1.2 MCON Series(BK)

Connector Part Information
- Harness Type: Rear Side Door Door Lock Door Wiring Harness - Right
- OEM Connector: 6098-8828
- Service Connector: Service by Harness - See Part Catalog
- Description: 16-Way M 1.2 Series(BK)

Terminal Part Information

Terminal Type ID	Terminated Lead	Diagnostic Test Probe	Terminal Removal Tool
I	Not required	J-35616-12 (BU)	No Tool Required
II	Not required	J-35616-16 (L-GN)	No Tool Required
III	Not required	J-35616-13 (BU)	No Tool Required
IV	Not required	J-35616-17 (L-GN)	No Tool Required

X805 Rear Side Door Door Wiring Harness - Right to Rear Side Door Door Lock Door Wiring Harness - Right

Pin	Size	Color	Circuit	Terminal Type ID	Option	Function	Pin	Size	Color	Circuit	Terminal Type ID	Option
(1) 1	(1) 0.5	(1) YE	(1) 6817	(1) II	(1) —	(1) LED Backlight Dimming Control 1	(1) 1	(1) 0.35	(1) YE	(1) 6817	(1) III	(1) —
2	—	—	—	—	—	Not Occupied	2	—	—	—	—	—

Pin	Size	Color	Circuit	Terminal Type ID	Option	Function	Pin	Size	Color	Circuit	Terminal Type ID	Option
(3) 3	(3) 0.35	(3) YE / BK	(3) 6677	(3) I	(3) —	(3) Right Rear Door Lock Indicator Control	(3) 3	(3) 0.5	(3) YE / BK	(3) 6677	(3) IV	(3) —
(4) 4	(4) 0.35	(4) GN / BN	(4) 4003	(4) I	(4) —	(4) Right Rear Door Lock Switch Lock Control	(4) 4	(4) 0.35	(4) GN / BN	(4) 4003	(4) III	(4) —
(5) 5	(5) 0.35	(5) BU / GY	(5) 4004	(5) I	(5) —	(5) Right Rear Door Lock Switch Unlock Control	(5) 5	(5) 0.35	(5) BU / GY	(5) 4004	(5) III	(5) —
(6) 6	(6) 0.35	(6) WH / YE	(6) 7557	(6) I	(6) —	(6) Interior Door Handle Accent Lighting Control	(6) 6	(6) 0.35	(6) WH / YE	(6) 7557	(6) III	(6) —
7 - 9	—	—	—	—	—	Not Occupied	7 - 9	—	—	—	—	—
(10) 10	(10) 0.35	(10) WH / GY	(10) 4649	(10) I	(10) —	(10) Right Rear Door Lock Status Signal	(10) 10	(10) 0.35	(10) WH / GY	(10) 4649	(10) III	(10) —
11	—	—	—	—	—	Not Occupied	11	—	—	—	—	—
(12) 12	(12) 0.75	(12) BK	(12) 1250	(12) II	(12) —	(12) Ground	(12) 12	(12) 0.35	(12) BK	(12) 1250	(12) IV	(12) —
13 - 16	—	—	—	—	—	Not Occupied	13 - 16	—	—	—	—	—

X806 Rear Side Door Door Wiring Harness - Right to Rear Side Door Door Lock Door Wiring Harness - Right

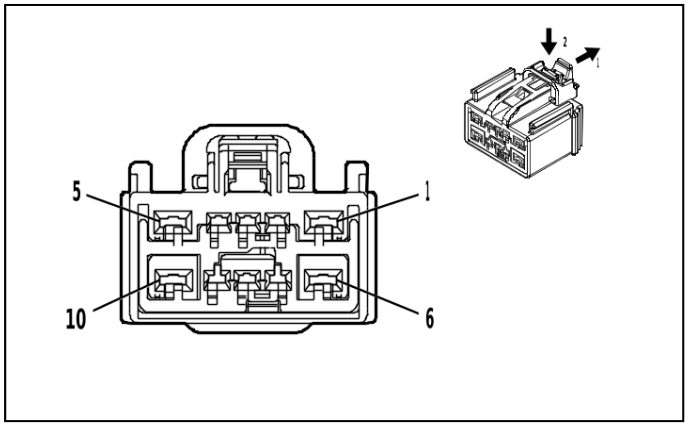

5020939

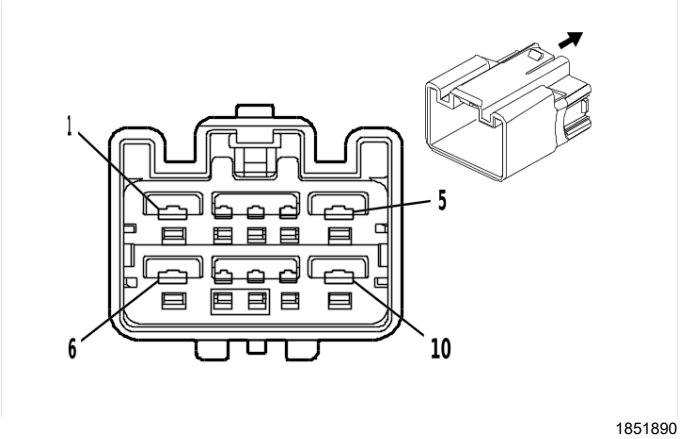

1851890

Connector Part Information

- Harness Type: Rear Side Door Door Wiring Harness - Right
- OEM Connector: 7289-9153-40
- Service Connector: Service by Harness - See Part Catalog
- Description: 10-Way F 1.5, 2.8 Kaizen Series(L-GY)

Connector Part Information

- Harness Type: Rear Side Door Door Lock Door Wiring Harness - Right
- OEM Connector: 7282-6459-40
- Service Connector: Service by Harness - See Part Catalog
- Description: 10-Way M 1.5, 2.8 Kaizen Series(L-GY)

Terminal Part Information

Terminal Type ID	Terminated Lead	Diagnostic Test Probe	Terminal Removal Tool
I	Not required	J-35616-14 (GN)	No Tool Required
II	Not required	J-35616-4A (PU)	No Tool Required
III	Not required	J-35616-3 (GY)	No Tool Required
IV	Not required	J-35616-5 (PU)	No Tool Required

X806 Rear Side Door Door Wiring Harness - Right to Rear Side Door Door Lock Door Wiring Harness - Right

Pin	Size	Color	Circuit	Terminal Type ID	Option	Function	Pin	Size	Color	Circuit	Terminal Type ID	Option
(1) 1	(1) 2.5	(1) RD / BN	(1) 4240	(1) II	(1) —	(1) Battery Positive Voltage	(1) 1	(1) 2.5	(1) RD / BN	(1) 4240	(1) IV	(1) —
(2) 2	(2) 0.35	(2) GY	(2) 748	(2) I	(2) —	(2) Right Rear Door Ajar Switch Signal	(2) 2	(2) 0.35	(2) GY	(2) 748	(2) III	(2) —
(3) 3	(3) 0.35	(3) GN / GY	(3) 6135	(3) I	(3) —	(3) Body Control Module LIN Bus 4	(3) 3	(3) 0.35	(3) GN / GY	(3) 6135	(3) III	(3) —
4	—	—	—	—	—	Not Occupied	4	—	—	—	—	—
(5) 5	(5) 2	(5) GN / BK	(5) 671	(5) II	(5) —	(5) Right Rear Window Motor Down Control	(5) 5	(5) 2	(5) GN / BK	(5) 671	(5) IV	(5) —
(6) 6	(6) 2.5	(6) BK	(6) 1250	(6) II	(6) —	(6) Ground	(6) 6	(6) 2.5	(6) BK	(6) 1250	(6) IV	(6) —
7 - 9	—	—	—	—	—	Not Occupied	7 - 9	—	—	—	—	—
(10) 10	(10) 2	(10) BU / GY	(10) 670	(10) II	(10) —	(10) Right Rear Window Motor Up Control	(10) 10	(10) 2	(10) BU / GY	(10) 670	(10) IV	(10) —

X900R Body Wiring Harness to Police Accessories Wiring Harness (5W4 / 9C1)

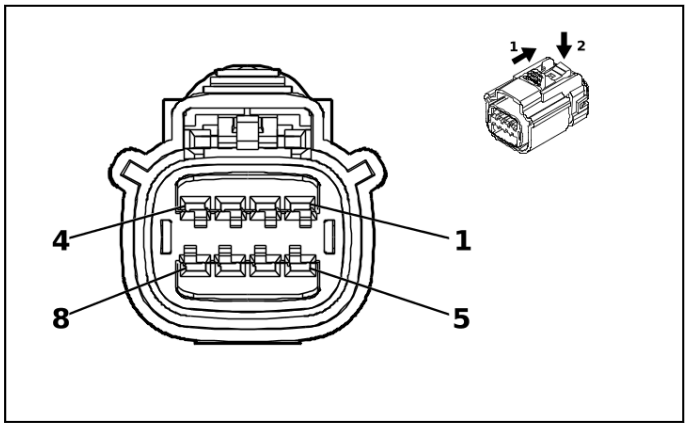

5253496

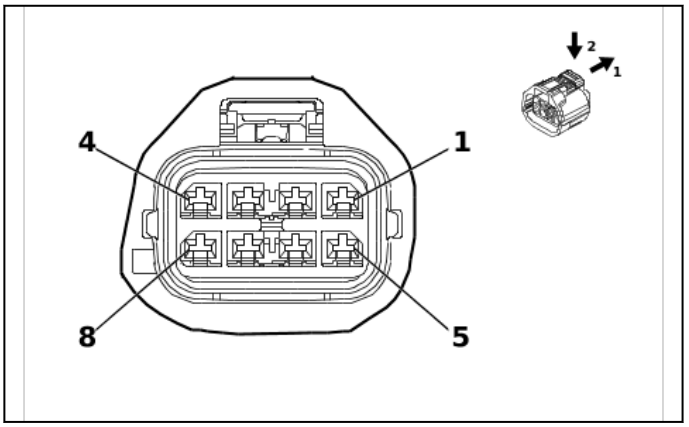

5881462

Connector Part Information
- Harness Type: Body Wiring Harness
- OEM Connector: 15514667
- Service Connector: 84766296
- Description: 8-Way F 1.5 OCS Series, Sealed(BK)

Connector Part Information
- Harness Type: Police Accessories Wiring Harness
- OEM Connector: Not Available
- Service Connector: Service by Harness - See Part Catalog
- Description: 8-Way M (BK)

Terminal Part Information

Terminal Type ID	Terminated Lead	Diagnostic Test Probe	Terminal Removal Tool
I	Not required	J-35616-2A (GY)	No Tool Required
II	Not required	No Tool Required	No Tool Required

X900R Body Wiring Harness to Police Accessories Wiring Harness (5W4 / 9C1)

Pin	Size	Color	Circuit	Terminal Type ID	Option	Function	Pin	Size	Color	Circuit	Terminal Type ID	Option
(1) 1	(1) 0.75	(1) GN	(1) 8892	(1) I	(1) —	(1) Police Rear Corner Light Control	(1) 1	(1) 0.75	(1) GN	(1) 8892	(1) II	(1) —
(2) 2	(2) 1	(2) BK	(2) 2050	(2) I	(2) —	(2) Ground	(2) 2	(2) 1	(2) BK	(2) 2050	(2) II	(2) —
(3) 3	(3) 0.75	(3) BU / WH	(3) 8891	(3) I	(3) —	(3) Police Corner Strobe Synchronization Signal	(3) 3	(3) 0.75	(3) BU / WH	(3) 8891	(3) II	(3) —
(4) 4	(4) 0.75	(4) YE	(4) 8894	(4) I	(4) —	(4) Police Rear Corner Strobe Control	(4) 4	(4) 0.75	(4) YE	(4) 8894	(4) II	(4) —
(5) 5	(5) 0.75	(5) GN	(5) 8892	(5) I	(5) —	(5) Police Rear Corner Light Control	(5) 5	(5) 0.75	(5) GN	(5) 8892	(5) II	(5) —
(6) 6	(6) 0.75	(6) BU / WH	(6) 8891	(6) I	(6) —	(6) Police Corner Strobe Synchronization Signal	(6) 6	(6) 0.75	(6) BU / WH	(6) 8891	(6) II	(6) —
(7) 7	(7) 1	(7) BK	(7) 2050	(7) I	(7) —	(7) Ground	(7) 7	(7) 1	(7) BK	(7) 2050	(7) II	(7) —
(8) 8	(8) 0.75	(8) YE	(8) 8894	(8) I	(8) —	(8) Police Rear Corner Strobe Control	(8) 8	(8) 0.75	(8) YE	(8) 8894	(8) II	(8) —

X904L Chassis Wiring Harness to Chassis Rear Wiring Harness Extension Harness - Left

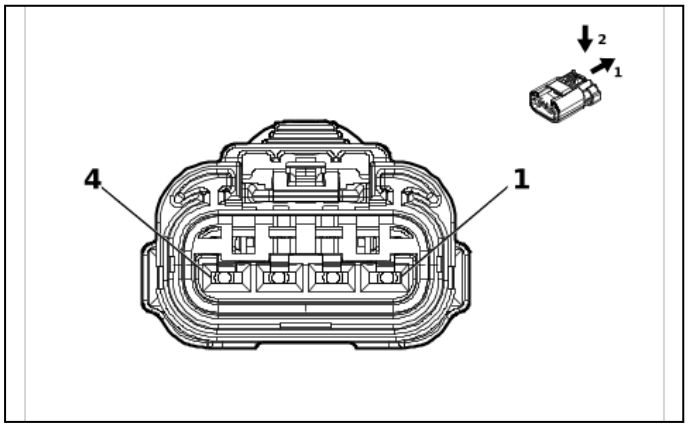

5873683

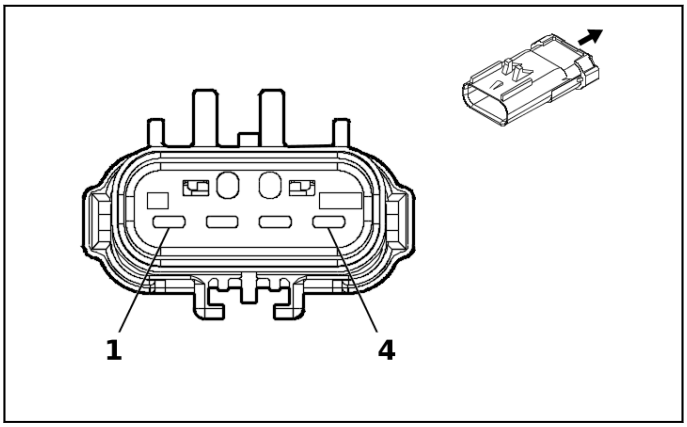

5246651

Connector Part Information
- Harness Type: Chassis Wiring Harness
- OEM Connector: 35333812
- Service Connector: 86584700
- Description: 4-Way F 2.8 APEX Series, Sealed(GY)

Connector Part Information
- Harness Type: Chassis Rear Wiring Harness Extension Harness - Left
- OEM Connector: 13518460
- Service Connector: Service by Harness - See Part Catalog
- Description: 4-Way M 2.8 APEX Series, Sealed(GY)

Terminal Part Information

Terminal Type ID	Terminated Lead	Diagnostic Test Probe	Terminal Removal Tool
I	Not required	J-35616-2A (GY)	No Tool Required
II	Not required	J-35616-4A (PU)	No Tool Required
III	Not required	J-35616-5 (PU)	No Tool Required

X904L Chassis Wiring Harness to Chassis Rear Wiring Harness Extension Harness - Left

Pin	Size	Color	Circuit	Terminal Type ID	Option	Function	Pin	Size	Color	Circuit	Terminal Type ID	Option
(1) 1	(1) 0.75	(1) GN / YE	(1) 1616	(1) I	(1) —	(1) Rear Brake Pad Wear Sensor Signal	(1) 1	(1) 0.75	(1) GN / YE	(1) 1616	(1) III	(1) —
(2) 2	(2) 0.75	(2) BK	(2) 2050	(2) I	(2) —	(2) Ground	(2) 2	(2) 0.75	(2) BK	(2) 2050	(2) III	(2) —
(3) 3	(3) 4	(3) GY / BK	(3) 4369	(3) II	(3) —	(3) Left Park Brake Motor Low Reference	(3) 3	(3) 2.5	(3) GY / BK	(3) 4369	(3) III	(3) —
(4) 4	(4) 4	(4) WH	(4) 2001	(4) II	(4) —	(4) Left Park Brake Motor Apply Control	(4) 4	(4) 2.5	(4) WH	(4) 2001	(4) III	(4) Z95

X904R Chassis Wiring Harness to Chassis Rear Wiring Harness Extension Harness - Right

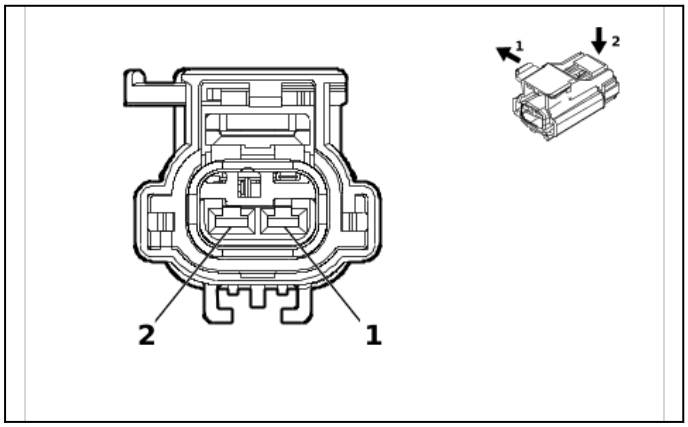

5377357

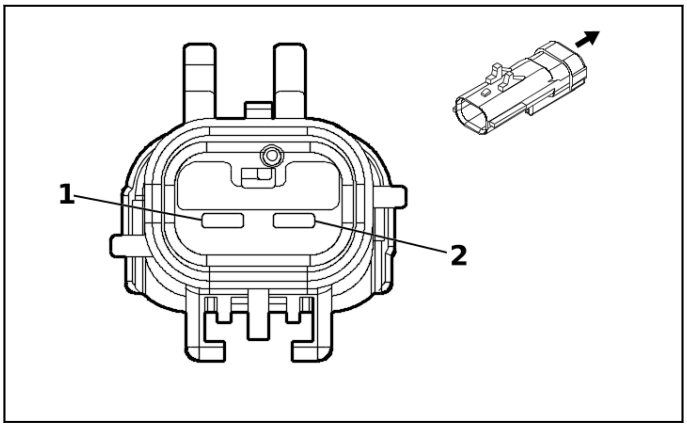

5246766

Connector Part Information
- Harness Type: Chassis Wiring Harness
- OEM Connector: 15380781
- Service Connector: 84867144
- Description: 2-Way F 2.8 APEX Series, Sealed(GY)

Connector Part Information
- Harness Type: Chassis Rear Wiring Harness Extension Harness - Right
- OEM Connector: Not Available
- Service Connector: Service by Harness - See Part Catalog
- Description: 2-Way M (GY)

Terminal Part Information

Terminal Type ID	Terminated Lead	Diagnostic Test Probe	Terminal Removal Tool
I	Not required	J-35616-35 (VT)	No Tool Required
II	Not required	No Tool Required	No Tool Required

X904R Chassis Wiring Harness to Chassis Rear Wiring Harness Extension Harness - Right

Pin	Size	Color	Circuit	Terminal Type ID	Option	Function	Pin	Size	Color	Circuit	Terminal Type ID	Option
(1) 1	(1) 2	(1) GY	(1) 4368	(1) I	(1) —	(1) Right Park Brake Motor Low Reference	(1) 1	(1) 2	(1) GY	(1) 4368	(1) II	(1) —
(2) 2	(2) 2	(2) GN / VT	(2) 1988	(2) I	(2) —	(2) Right Park Brake Motor Apply Control	(2) 2	(2) 2	(2) GN / VT	(2) 1988	(2) II	(2) —

X905 Liftgate Wiring Harness to Body Wiring Harness

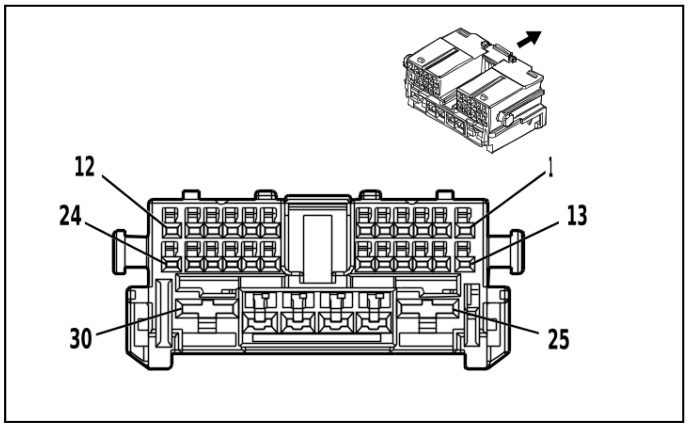

4253192

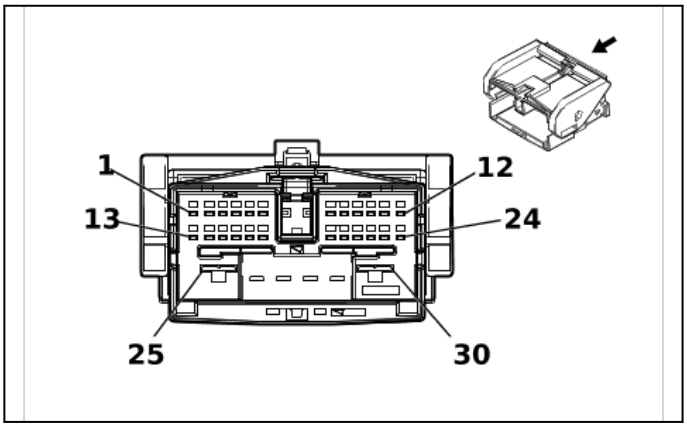

4249201

Connector Part Information

- Harness Type: Liftgate Wiring Harness
- OEM Connector: 7298-4329-30
- Service Connector: Service by Harness - See Part Catalog
- Description: 30-Way F 1.2 MCON, 2.8, 6.3 YESC Series(BK)

Connector Part Information

- Harness Type: Body Wiring Harness
- OEM Connector: 7297-4331-30
- Service Connector: 13539008
- Description: 30-Way M 1.2 MCON, 2.8, 6.3 YESC Series(BK)

Terminal Part Information

Terminal Type ID	Terminated Lead	Diagnostic Test Probe	Terminal Removal Tool
I	Not required	J-35616-16 (L-GN)	No Tool Required
II	Not required	J-35616-42 (RD)	No Tool Required
III	Not required	J-35616-4A (PU)	No Tool Required
IV	13580023	J-35616-43 (RD)	J-38125-11A
V	84888592	J-35616-5 (PU)	J-38125-11A
VI	87838750	J-35616-13 (BU)	J-38125-215A

X905 Liftgate Wiring Harness to Body Wiring Harness

Pin	Size	Color	Circuit	Terminal Type ID	Option	Function	Pin	Size	Color	Circuit	Terminal Type ID	Option
(1) 1	(1) 0.5	(1) YE / BK	(1) 8085	(1) I	(1) —	(1) Rear Closure Latch Primary Status	(1) 1	(1) 0.35	(1) YE / BK	(1) 8085	(1) VI	(1) —
(2) 2	(2) 0.5	(2) GN / YE	(2) 6846	(2) I	(2) —	(2) Rear License Plate Lamp Control	(2) 2	(2) 0.35	(2) GN / YE	(2) 6846	(2) VI	(2) —
(3) 3	(3) 0.5	(3) BU / GN	(3) 4089	(3) I	(3) —	(3) Rear Closure Motor Control	(3) 3	(3) 0.35	(3) BU / GN	(3) 4089	(3) VI	(3) —
4	—	—	—	—	—	Not Occupied	4	—	—	—	—	—
(5) 5	(5) 0.5	(5) GN / BU	(5) 2856	(5) I	(5) —	(5) Body Control Module LIN Bus 10	(5) 5	(5) 0.35 (5) 0.5	(5) GN / BU (5) GN / BU	(5) 2856 (5) 2856	(5) VI (5) VI	(5) - AS8 (5) AS8

Pin	Size	Color	Circuit	Terminal Type ID	Option	Function	Pin	Size	Color	Circuit	Terminal Type ID	Option
(6) 6	(6) 0.5 (6) 0.5	(6) VT / GY (6) WH / VT	(6) 1303 (6) 12481	(6) I (6) I	(6) TB4 (6) TCP	(6) Liftgate Ajar Switch Signal 1 (6) Hands Free Closure Release Sensor Alarm Control	(6) 6	(6) 0.35 (6) 0.35	(6) VT / GY (6) WH / VT	(6) 1303 (6) 12481	(6) VI (6) VI	(6) TB4 (6) TCP
(7) 7	(7) 0.75	(7) VT / GN	(7) 8869	(7) I	(7) 5W4 / 9C1	(7) Police Liftgate Strobe Rear On OFF Control	(7) 7	(7) 0.35	(7) VT / GN	(7) 8869	(7) VI	(7) 5W4 / 9C1
8	—	—	—	—	—	Not Occupied	8	—	—	—	—	—
(9) 9	(9) 0.5	(9) GY / BK	(9) 2680	(9) I	(9) —	(9) Lock Actuators Unlock Control 2	(9) 9	(9) 0.75	(9) GY / BK	(9) 2680	(9) VI	(9) —
(10) 10	(10) 0.5	(10) BK / VT	(10) 4656	(10) I	(10) —	(10) Rear Closure Object Sensor Low Reference	(10) 10	(10) 0.35	(10) BK / VT	(10) 4656	(10) VI	(10) —
11	—	—	—	—	—	Not Occupied	11	—	—	—	—	—
(12) 12	(12) 0.5	(12) BU / YE	(12) 2279	(12) I	(12) —	(12) Liftgate Window Ajar Switch Signal	(12) 12	(12) 0.35	(12) BU / YE	(12) 2279	(12) VI	(12) —
(13) 13	(13) 0.5	(13) GY / WH	(13) 4658	(13) I	(13) —	(13) Rear Closure Switch LED Control	(13) 13	(13) 0.35	(13) GY / WH	(13) 4658	(13) VI	(13) —
14 - 15	—	—	—	—	—	Not Occupied	14 - 15	—	—	—	—	—
(16) 16	(16) 0.5	(16) YE / BU	(16) 5797	(16) I	(16) —	(16) Rear Closure Handle Switch Open Signal	(16) 16	(16) 0.35	(16) YE / BU	(16) 5797	(16) VI	(16) —
(17) 17	(17) 0.5	(17) GY / GN	(17) 6190	(17) I	(17) —	(17) Liftgate Window/Rear Compartment Lid, Exterior Unlatch Signal	(17) 17	(17) 0.35	(17) GY / GN	(17) 6190	(17) VI	(17) —
18 - 20	—	—	—	—	—	Not Occupied	18 - 20	—	—	—	—	—
(21) 21	(21) 0.5	(21) GY / VT	(21) 4678	(21) I	(21) —	(21) Rear Closure Latch Unlatch Status	(21) 21	(21) 0.35	(21) GY / VT	(21) 4678	(21) VI	(21) —
(22) 22	(22) 0.5	(22) WH / GN	(22) 8084	(22) I	(22) —	(22) Rear Closure Latch Neutral Status	(22) 22	(22) 0.35	(22) WH / GN	(22) 8084	(22) VI	(22) —
(23) 23	(23) 0.5	(23) GN	(23) 4657	(23) I	(23) —	(23) Rear Closure Switch Signal	(23) 23	(23) 0.35	(23) GN	(23) 4657	(23) VI	(23) —

Pin	Size	Color	Circuit	Terminal Type ID	Option	Function	Pin	Size	Color	Circuit	Terminal Type ID	Option
(24) 24	(24) 0.5	(24) B U / WH	(24) 61 28	(24) I	(24) —	(24) Rear Closure Unlatch Actuator Unlatch Control	(24) 24	(24) 0.5	(24) B U / WH	(24) 61 28	(24) VI	(24) —
(25) 25	(25) 2.5	(25) B N / VT	(25) 29 3	(25) II	(25) —	(25) Rear Defogger Grid Control	(25) 25	(25) 2.5	(25) B N / VT	(25) 29 3	(25) IV	(25) —
(26) 26	(26) 1	(26) R D / YE	(26) 30 40	(26) III	(26) —	(26) Battery Positive Volt-age	(26) 26	(26) 1	(26) R D / YE	(26) 30 40	(26) V	(26) —
(27) 27	(27) 0.5 (27) 1	(27) V T (27) B U / GY	(27) 88 66 (27) 46 82	(27) III (27) III	(27) 5W4 / 9C1 (27) TCP / TB5	(27) Police Liftgate Strobe Control (27) Rear Closure Cinch Latch Motor Release Control	(27) 27	(27) 0.5 (27) 1	(27) V T (27) B U / GY	(27) 88 66 (27) 46 82	(27) V (27) V	(27) 5W4 / 9C1 (27) TCP / TB5
(28) 28	(28) 0.75 (28) 1	(28) WH (28) B N	(28) 88 67 (28) 46 81	(28) III (28) III	(28) 5W4 / 9C1 (28) TCP / TB5	(28) Police Liftgate Strobe Syn-chronization Signal (28) Rear Closure Cinch Latch Motor Cinch Control	(28) 28	(28) 0.75 (28) 1	(28) WH (28) B N	(28) 88 67 (28) 46 81	(28) V (28) V	(28) 5W4 / 9C1 (28) TCP / TB5
(29) 29	(29) 1	(29) B K	(29) 20 50	(29) III	(29) —	(29) Ground	(29) 29	(29) 1	(29) B K	(29) 20 50	(29) V	(29) —
(30) 30	(30) 2.5	(30) B K	(30) 20 50	(30) II	(30) —	(30) Ground	(30) 30	(30) 2.5	(30) B K	(30) 20 50	(30) IV	(30) —

X907 Rear License Plate Lamp Wiring Harness to Liftgate Wiring Harness

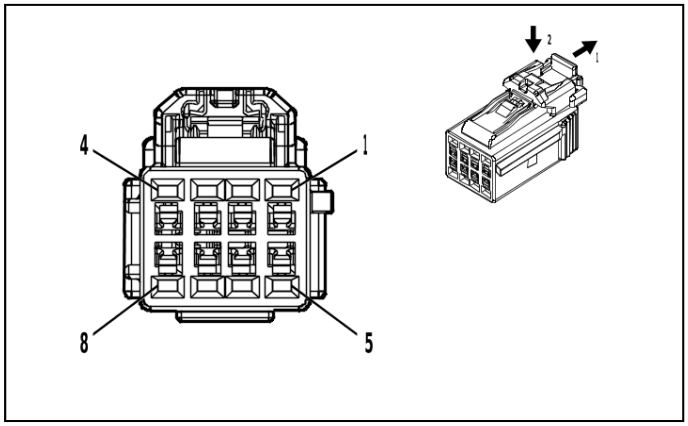

5086387

Connector Part Information

- Harness Type: Rear License Plate Lamp Wiring Harness
- OEM Connector: 6098-8443
- Service Connector: Service by Harness - See Part Catalog
- Description: 8-Way F 1.2 Series(BK)

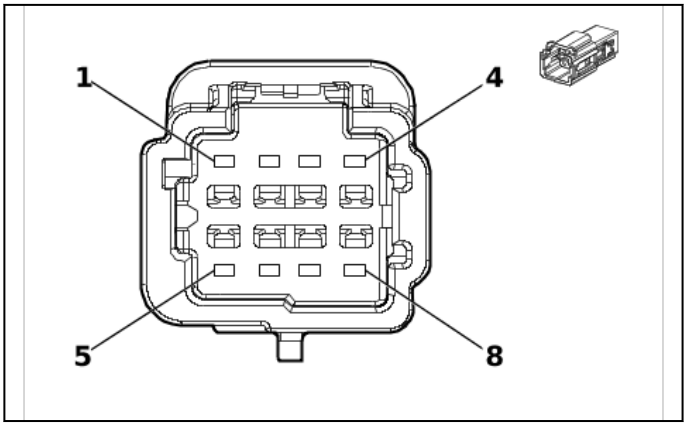

5751475

Connector Part Information

- Harness Type: Liftgate Wiring Harness
- OEM Connector: 6098-9129
- Service Connector: Service by Harness - See Part Catalog
- Description: 8-Way M 1.2 MBS Series(BK)

Terminal Part Information

Terminal Type ID	Terminated Lead	Diagnostic Test Probe	Terminal Removal Tool
I	Not required	J-35616-12 (BU)	No Tool Required
II	Not required	J-35616-16 (L-GN)	No Tool Required
III	Not required	J-35616-13 (BU)	No Tool Required
IV	Not required	J-35616-17 (L-GN)	No Tool Required

X907 Rear License Plate Lamp Wiring Harness to Liftgate Wiring Harness

Pin	Size	Color	Circuit	Terminal Type ID	Option	Function	Pin	Size	Color	Circuit	Terminal Type ID	Option
1	—	—	—	—	—	Not Occupied	1	—	—	—	—	—
(2) 2	(2) 0.35	(2) GN / YE	(2) 6846	(2) I	(2) —	(2) Rear License Plate Lamp Control	(2) 2	(2) 0.5	(2) GN / YE	(2) 6846	(2) IV	(2) —
3 - 4	—	—	—	—	—	Not Occupied	3 - 4	—	—	—	—	—
(5) 5	(5) 0.35	(5) GY / GN	(5) 6190	(5) I	(5) —	(5) Liftgate Window/Rear Compartment Lid, Exterior Unlatch Signal	(5) 5	(5) 0.5	(5) GY / GN	(5) 6190	(5) IV	(5) —
6	—	—	—	—	—	Not Occupied	6	—	—	—	—	—
(7) 7	(7) 0.5	(7) BK	(7) 2050	(7) II	(7) —	(7) Ground	(7) 7	(7) 0.75	(7) BK	(7) 2050	(7) III	(7) —
8	—	—	—	—	—	Not Occupied	8	—	—	—	—	—

X944 Engine Wiring Harness to Engine Coolant Temperature Sensor Harness (LZ0)

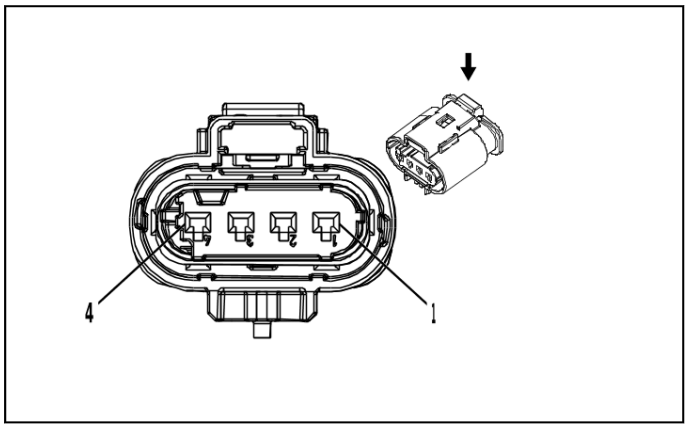

2717079

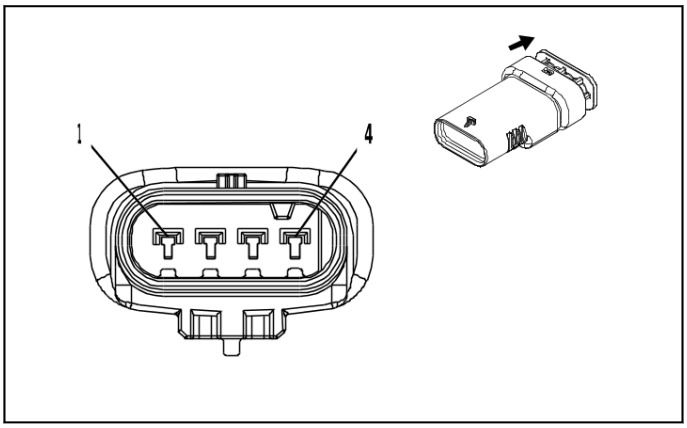

4560843

Connector Part Information
- Harness Type: Engine Wiring Harness
- OEM Connector: 10010346
- Service Connector: 13587299
- Description: 4-Way F 1.2 Multilock Series, Sealed(BK)

Connector Part Information
- Harness Type: Engine Coolant Temperature Sensor Harness
- OEM Connector: 13503594
- Service Connector: Service by Harness - See Part Catalog
- Description: 4-Way M 1.2 Multilock Series, Sealed(GY)

Terminal Part Information

Terminal Type ID	Terminated Lead	Diagnostic Test Probe	Terminal Removal Tool
I	Not required	J-35616-16 (L-GN)	No Tool Required
II	Not required	No Tool Required	No Tool Required

X944 Engine Wiring Harness to Engine Coolant Temperature Sensor Harness (LZ0)

Pin	Size	Color	Circuit	Terminal Type ID	Option	Function	Pin	Size	Color	Circuit	Terminal Type ID	Option
1 - 2	—	—	—	—	—	Not Occupied	1 - 2	—	—	—	—	—
(3) 3	(3) 0.5	(3) VT	(3) 2988	(3) I	(3) —	(3) Engine Outlet Coolant Temperature Signal	(3) 3	(3) 0.5	(3) VT	(3) 2988	(3) II	(3) —
(4) 4	(4) 0.5	(4) BK / GY	(4) 626	(4) I	(4) —	(4) Engine Control Vehicle Sensors Low Reference 1	(4) 4	(4) 0.5	(4) BK / GY	(4) 626	(4) II	(4) —

X950 Front Object Alarm Sensor Wiring Harness to Body Wiring Harness

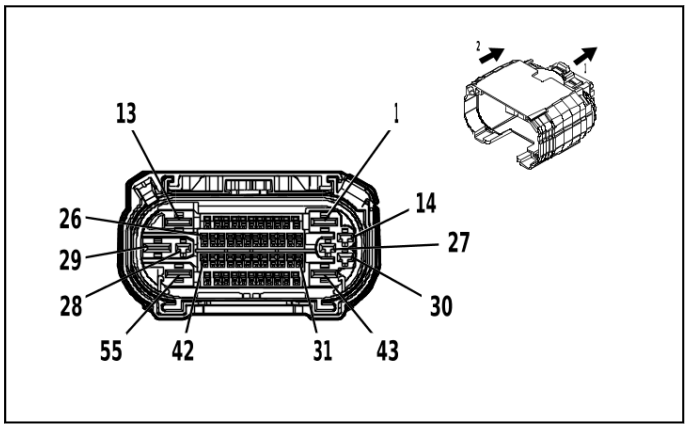

4992168

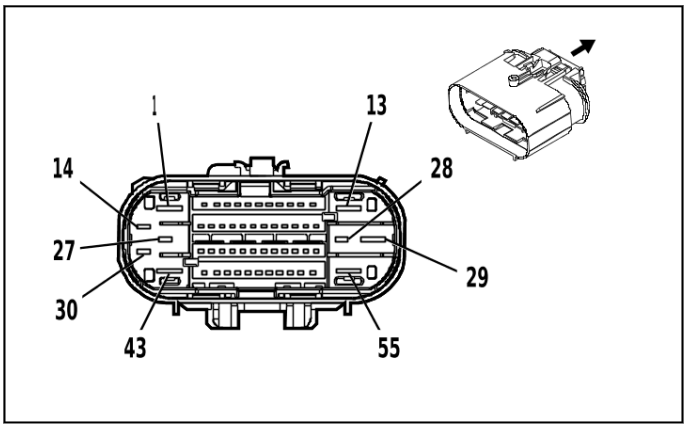

4993301

Connector Part Information
- Harness Type: Front Object Alarm Sensor Wiring Harness
- OEM Connector: 35016652
- Service Connector: Service by Harness - See Part Catalog
- Description: 55-Way F 1.2 OCS, 2.8, 6.3 CTS Series, Sealed(BK)

Connector Part Information
- Harness Type: Body Wiring Harness
- OEM Connector: 35205173
- Service Connector: 84727364
- Description: 55-Way M 1.2 OCS, 2.8, 6.3 CTS Series, Sealed(BK)

Terminal Part Information

Terminal Type ID	Terminated Lead	Diagnostic Test Probe	Terminal Removal Tool
I	Not required	J-35616-12 (BU)	No Tool Required
II	Not required	J-35616-16 (L-GN)	No Tool Required
III	84867140	J-35616-13 (BU)	J-38125-215A

X950 Front Object Alarm Sensor Wiring Harness to Body Wiring Harness

Pin	Size	Color	Circuit	Terminal Type ID	Option	Function	Pin	Size	Color	Circuit	Terminal Type ID	Option
1 - 3	—	—	—	—	—	Not Occupied	1 - 3	—	—	—	—	—
(4) 4	(4) 0.5	(4) BK / WH	(4) 251	(4) II	(4) —	(4) Signal Ground (4) Signal Ground	(4) 4	(4) 0.75 (4) 0.5	(4) BK / WH (4) BK / WH	(4) 251 (4) 251	(4) III (4) III	(4) - UGN (4) UGN
5	—	—	—	—	—	Not Occupied	5	—	—	—	—	—

Pin	Size	Color	Circuit	Terminal Type ID	Option	Function	Pin	Size	Color	Circuit	Terminal Type ID	Option
(6) 6	(6) 0.5	(6) BN / GY	(6) 5061	(6) II	(6) —	(6) Left Front Fog Lamp Control	(6) 6	(6) 0.5	(6) BN / GY	(6) 5061	(6) III	(6) —
(7) 7	(7) 0.5	(7) GY	(7) 3154	(7) II	(7) —	(7) Left Front Advanced Parking Assist Side Object Sensor Signal	(7) 7	(7) 0.5	(7) GY	(7) 3154	(7) III	(7) —
8	—	—	—	—	—	Not Occupied	8	—	—	—	—	—
(9) 9	(9) 0.5	(9) GN	(9) 3155	(9) II	(9) —	(9) Right Front Advanced Parking Assist Side Object Sensor Signal	(9) 9	(9) 0.5	(9) GN	(9) 3155	(9) III	(9) —
10	—	—	—	—	—	Not Occupied	10	—	—	—	—	—
(11) 11	(11) 0.5	(11) WH / GY	(11) 5217	(11) II	(11) —	(11) Right Front Outer Parking Assist Sensor	(11) 11	(11) 0.5	(11) WH / GY	(11) 5217	(11) III	(11) —
12 - 14	—	—	—	—	—	Not Occupied	12 - 14	—	—	—	—	—
(15) 15	(15) 0.5	(15) BN	(15) 6581	(15) II	(15) —	(15) Front Parking Assist Display Control	(15) 15	(15) 0.5	(15) BN	(15) 6581	(15) III	(15) —
(16) 16	(16) 0.5	(16) YE / GY	(16) 5216	(16) II	(16) —	(16) Left Front Middle Parking Assist Sensor	(16) 16	(16) 0.5	(16) YE / GY	(16) 5216	(16) III	(16) —
(17) 17	(17) 0.5	(17) RD / GN	(17) 3140	(17) II	(17) —	(17) Battery Positive Voltage	(17) 17	(17) 0.5	(17) RD / GN	(17) 3140	(17) III	(17) —
(18) 18	(18) 0.5	(18) BK / BU	(18) 5214	(18) II	(18) —	(18) Front Parking Assist Sensor Low Reference	(18) 18	(18) 0.5	(18) BK / BU	(18) 5214	(18) III	(18) —
19	—	—	—	—	—	Not Occupied	19	—	—	—	—	—
(20) 20	(20) 0.5	(20) VT / WH	(20) 5215	(20) II	(20) —	(20) Left Front Outer Parking Assist Sensor	(20) 20	(20) 0.5	(20) VT / WH	(20) 5215	(20) III	(20) —
21 - 22	—	—	—	—	—	Not Occupied	21 - 22	—	—	—	—	—
(23) 23	(23) 0.5	(23) BU / GN	(23) 1253	(23) II	(23) —	(23) Right Front Park Lamp Control	(23) 23	(23) 0.5	(23) BU / GN	(23) 1253	(23) III	(23) —
24 - 25	—	—	—	—	—	Not Occupied	24 - 25	—	—	—	—	—
(26) 26	(26) 0.5	(26) VT / GY	(26) 5218	(26) II	(26) —	(26) Right Front Middle Parking Assist Sensor	(26) 26	(26) 0.5	(26) VT / GY	(26) 5218	(26) III	(26) —
27 - 30	—	—	—	—	—	Not Occupied	27 - 30	—	—	—	—	—

Pin	Size	Color	Circuit	Terminal Type ID	Option	Function	Pin	Size	Color	Circuit	Terminal Type ID	Option
(31) 31	(31) 0.5	(31) WH / YE	(31) 12 54	(31) II	(31) —	(31) Left Front Park Lamp Control	(31) 31	(31) 0.5	(31) WH / YE	(31) 12 54	(31) III	(31) —
(32) 32	(32) 0.35	(32) WH / GY	(32) 41 04	(32) I	(32) —	(32) AUTOSAR CAN Bus [-] 8 Serial Data	(32) 32	(32) 0.35	(32) WH / GY	(32) 41 04	(32) III	(32) —
(33) 33	(33) 0.35	(33) BU / GY	(33) 41 05	(33) I	(33) —	(33) AUTOSAR CAN Bus [+] 8 Serial Data	(33) 33	(33) 0.35	(33) BU / GY	(33) 41 05	(33) III	(33) —
34	—	—	—	—	—	Not Occupied	34	—	—	—	—	—
(35) 35	(35) 0.5	(35) WH / YE	(35) 11 325	(35) II	(35) —	(35) Virtual Key Private CAN Bus [-] Serial Data	(35) 35	(35) 0.5	(35) WH / YE	(35) 11 325	(35) III	(35) —
(36) 36	(36) 0.5	(36) BU / BN	(36) 11 326	(36) II	(36) —	(36) Virtual Key Private CAN Bus [+] Serial Data	(36) 36	(36) 0.5	(36) BU / BN	(36) 11 326	(36) III	(36) —
37	—	—	—	—	—	Not Occupied	37	—	—	—	—	—
(38) 38	(38) 0.35	(38) WH / GY	(38) 41 04	(38) I	(38) —	(38) AUTOSAR CAN Bus [-] 8 Serial Data	(38) 38	(38) 0.35	(38) WH / GY	(38) 41 04	(38) III	(38) —
(39) 39	(39) 0.35	(39) BU / GY	(39) 41 05	(39) I	(39) —	(39) AUTOSAR CAN Bus [+] 8 Serial Data	(39) 39	(39) 0.35	(39) BU / GY	(39) 41 05	(39) III	(39) —
40 - 43	—	—	—	—	—	Not Occupied	40 - 43	—	—	—	—	—
(44) 44	(44) 0.75	(44) BK	(44) 15 0	(44) II	(44) —	(44) Ground	(44) 44	(44) 0.75	(44) BK	(44) 15 0	(44) III	(44) —
45 - 53	—	—	—	—	—	Not Occupied	45 - 53	—	—	—	—	—
(54) 54	(54) 0.75	(54) BK	(54) 25 0	(54) II	(54) —	(54) Ground	(54) 54	(54) 0.75	(54) BK	(54) 25 0	(54) III	(54) —
55	—	—	—	—	—	Not Occupied	55	—	—	—	—	—

X951 Front Object Alarm Sensor Wiring Harness to Body Wiring Harness

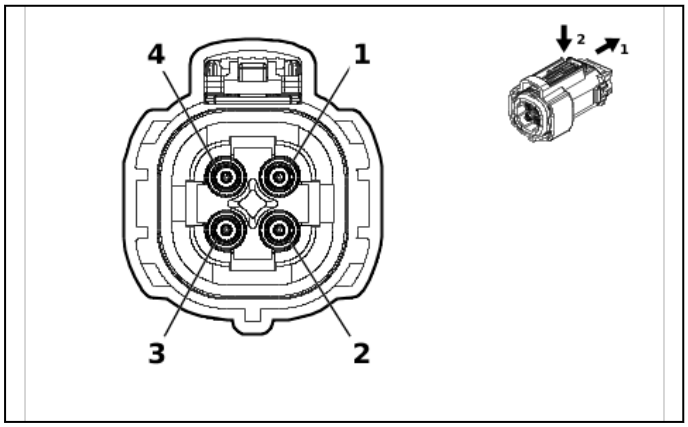

6018776

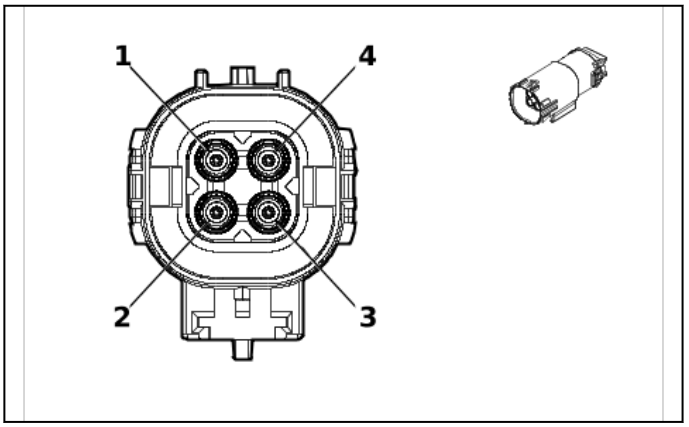

6020240

Connector Part Information

- Harness Type: Front Object Alarm Sensor Wiring Harness COAX
- OEM Connector: 35772418
- Service Connector: Service by Cable Assembly — See Part Catalog
- Description: 4-Way F Mini Coax Type(BK)

Connector Part Information

- Harness Type: Body Wiring Harness COAX
- OEM Connector: 35802164
- Service Connector: Service by Cable Assembly — See Part Catalog
- Description: 4-Way M Mini Coax Type(BK)

Terminal Part Information

Terminal Type ID	Terminated Lead	Diagnostic Test Probe	Terminal Removal Tool
I	Not required	No Tool Required	No Tool Required

X951 Front Object Alarm Sensor Wiring Harness to Body Wiring Harness

Pin	Size	Color	Circuit	Terminal Type ID	Option	Function	Pin	Size	Color	Circuit	Terminal Type ID	Option
(1) 1	(1) 0.4	(1) Coax Cable/ <p01>	(1) 4722	(1) I	(1) —	(1) Frontview Camera LVDS (Low Voltage Differential Signaling) Coaxial Signal	(1) 1	(1) 0.4	(1) Coax Cable/ <p01>	(1) 4722	(1) II	(1) —
2 - 4	—	—	—	—	—	Not Occupied	2 - 4	—	—	—	—	—

X953 Body Wiring Harness to Rear Object Alarm Sensor Wiring Harness

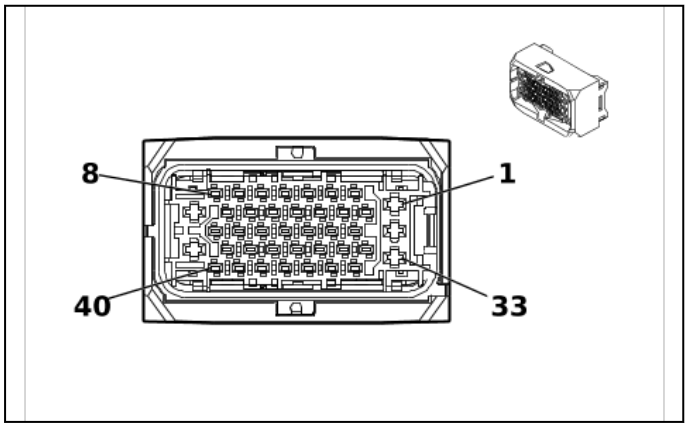

5517284

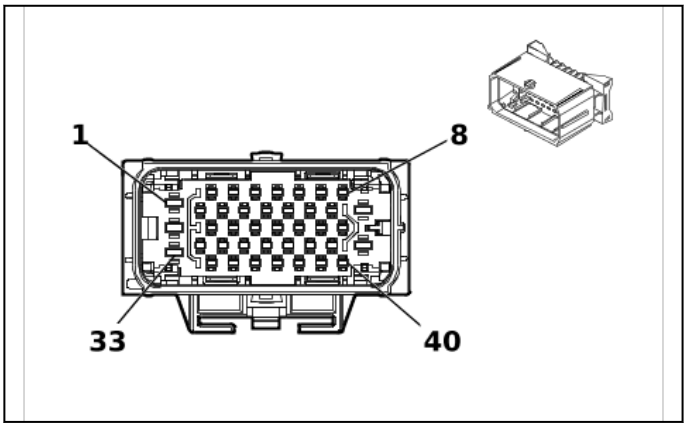

5782986

Connector Part Information

- Harness Type: Body Wiring Harness
- OEM Connector: 33367902
- Service Connector: 84952158
- Description: 40-Way F 1.5, 2.8 MCP Series, Sealed(BK)

Connector Part Information

- Harness Type: Rear Object Alarm Sensor Wiring Harness
- OEM Connector: 33370237
- Service Connector: Service by Harness - See Part Catalog
- Description: 40-Way M 1.5, 2.8 MCP Series, Sealed(BK)

Terminal Part Information

Terminal Type ID	Terminated Lead	Diagnostic Test Probe	Terminal Removal Tool
I	19368624	J-35616-35 (VT)	J-38125-557
II	19369235	J-35616-14 (GN)	EL-38125-560A
III	Not required	J-35616-3 (GY)	No Tool Required
IV	Not required	J-35616-5 (PU)	No Tool Required

X953 Body Wiring Harness to Rear Object Alarm Sensor Wiring Harness

Pin	Size	Color	Circuit	Terminal Type ID	Option	Function	Pin	Size	Color	Circuit	Terminal Type ID	Option
(1) 1	(1) 1	(1) RD / BN	(1) 4940	(1) I	(1) —	(1) Battery Positive Voltage	(1) 1	(1) 1	(1) RD / BN	(1) 4940	(1) IV	(1) —
2	—	—	—	—	—	Not Occupied	2	—	—	—	—	—
(3) 3	(3) 0.5	(3) BN / WH	(3) 2374	(3) II	(3) —	(3) Object Sensor Voltage Reference	(3) 3	(3) 0.5	(3) BN / WH	(3) 2374	(3) III	(3) —
4	—	—	—	—	—	Not Occupied	4	—	—	—	—	—
(5) 5	(5) 0.5	(5) YE	(5) 2375	(5) II	(5) —	(5) Left Rear Outer Parking Assist Sensor Signal	(5) 5	(5) 0.5	(5) YE	(5) 2375	(5) III	(5) —
6 - 8	—	—	—	—	—	Not Occupied	6 - 8	—	—	—	—	—
(9) 9	(9) 0.35	(9) BU / GY	(9) 4105	(9) II	(9) —	(9) AUTOSAR CAN Bus [+] 8 Serial Data	(9) 9	(9) 0.5	(9) BU / GY	(9) 4105	(9) III	(9) —
(10) 10	(10) 0.35	(10) WH / GY	(10) 4104	(10) II	(10) —	(10) AUTOSAR CAN Bus [-] 8 Serial Data	(10) 10	(10) 0.5	(10) WH / GY	(10) 4104	(10) III	(10) —
11	—	—	—	—	—	Not Occupied	11	—	—	—	—	—

Pin	Size	Color	Circuit	Terminal Type ID	Option	Function	Pin	Size	Color	Circuit	Terminal Type ID	Option
(12) 12	(12) 0.5	(12) WH / YE	(12) 11 325	(12) II	(12) —	(12) Virtual Key Private CAN Bus [-] Serial Data	(12) 12	(12) 0.5	(12) WH / YE	(12) 11 325	(12) III	(12) —
(13) 13	(13) 0.5	(13) B U / BN	(13) 11 326	(13) II	(13) —	(13) Virtual Key Private CAN Bus [+] Serial Data	(13) 13	(13) 0.5	(13) B U / BN	(13) 11 326	(13) III	(13) —
(14) 14	(14) 0.5	(14) WH / GY	(14) 41 04	(14) II	(14) —	(14) AUTOSA R CAN Bus [-] 8 Serial Data	(14) 14	(14) 0.5	(14) WH / GY	(14) 41 04	(14) III	(14) —
(15) 15	(15) 0.5	(15) B U / GY	(15) 41 05	(15) II	(15) —	(15) AUTOSA R CAN Bus [+] 8 Serial Data	(15) 15	(15) 0.5	(15) B U / GY	(15) 41 05	(15) III	(15) —
16	—	—	—	—	—	Not Occupied	16	—	—	—	—	—
(17) 17	(17) 0.5	(17) R D / GY	(17) 48 40	(17) I	(17) —	(17) Battery Positive Volt-age	(17) 17	(17) 0.5	(17) R D / GY	(17) 48 40	(17) IV	(17) —
18 - 19	—	—	—	—	—	Not Occupied	18 - 19	—	—	—	—	—
(20) 20	(20) 0.35	(20) WH	(20) 41 00	(20) II	(20) —	(20) AUTOSA R CAN Bus [-] 4 Serial Data	(20) 20	(20) 0.35	(20) WH	(20) 41 00	(20) III	(20) —
(21) 21	(21) 0.35	(21) B U / VT	(21) 41 01	(21) II	(21) —	(21) AUTOSA R CAN Bus [+] 4 Serial Data	(21) 21	(21) 0.35	(21) B U / VT	(21) 41 01	(21) III	(21) —
22	—	—	—	—	—	Not Occupied	22	—	—	—	—	—
(23) 23	(23) 0.35	(23) B N / GN	(23) 35 68	(23) II	(23) —	(23) Rear Closure Passive Entry Antenna High Signal	(23) 23	(23) 0.5	(23) B N / GN	(23) 35 68	(23) III	(23) —
(24) 24	(24) 0.35	(24) G N / GY	(24) 35 69	(24) II	(24) —	(24) Rear Closure Passive Entry Antenna Low Signal	(24) 24	(24) 0.5	(24) G N / GY	(24) 35 69	(24) III	(24) —
(25) 25	(25) 0.5	(25) Y E / BU	(25) 23 76	(25) II	(25) —	(25) Left Rear Middle Parking Assist Sensor Signal	(25) 25	(25) 0.5	(25) Y E / BU	(25) 23 76	(25) III	(25) —
(26) 26	(26) 0.5	(26) B K / GY	(26) 23 79	(26) II	(26) —	(26) Object Sensor Low Reference	(26) 26	(26) 0.5	(26) B K / GY	(26) 23 79	(26) III	(26) —
(27) 27	(27) 0.5	(27) B U	(27) 31 57	(27) II	(27) —	(27) Right Rear Advanced Parking Assist Side Object Sensor Signal	(27) 27	(27) 0.5	(27) B U	(27) 31 57	(27) III	(27) —
28 - 31	—	—	—	—	—	Not Occupied	28 - 31	—	—	—	—	—
(32) 32	(32) 0.5	(32) B K	(32) 14 50	(32) I	(32) —	(32) Ground	(32) 32	(32) 0.5	(32) B K	(32) 14 50	(32) IV	(32) —
33	—	—	—	—	—	Not Occupied	33	—	—	—	—	—

Pin	Size	Color	Circuit	Terminal Type ID	Option	Function	Pin	Size	Color	Circuit	Terminal Type ID	Option
(34) 34	(34) 0.5	(34) Y E / WH	(34) 23 77	(34) II	(34) —	(34) Right Rear Middle Parking Assist Sensor Signal	(34) 34	(34) 0.5	(34) Y E / WH	(34) 23 77	(34) III	(34) —
(35) 35	(35) 0.5	(35) G N	(35) 31 56	(35) II	(35) —	(35) Left Rear Advanced Parking Assist Side Object Sensor Signal	(35) 35	(35) 0.5	(35) G N	(35) 31 56	(35) III	(35) —
(36) 36	(36) 0.35	(36) G N / YE	(36) 28 62	(36) II	(36) —	(36) Body Control Module LIN Bus 16	(36) 36	(36) 0.5	(36) G N / YE	(36) 28 62	(36) III	(36) —
(37) 37	(37) 0.5	(37) Y E / VT	(37) 23 78	(37) II	(37) —	(37) Right Rear Outer Parking Assist Sensor Signal	(37) 37	(37) 0.5	(37) Y E / VT	(37) 23 78	(37) III	(37) —
38 - 40	—	—	—	—	—	Not Occupied	38 - 40	—	—	—	—	—

X954 Body Wiring Harness to Forward Range Radar Sensor Wiring Harness

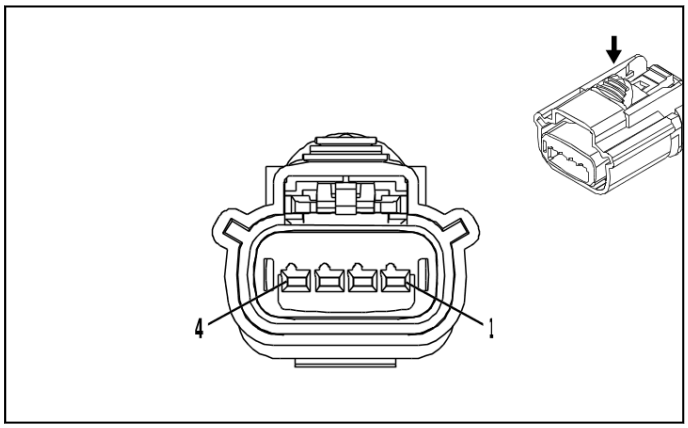

4455251

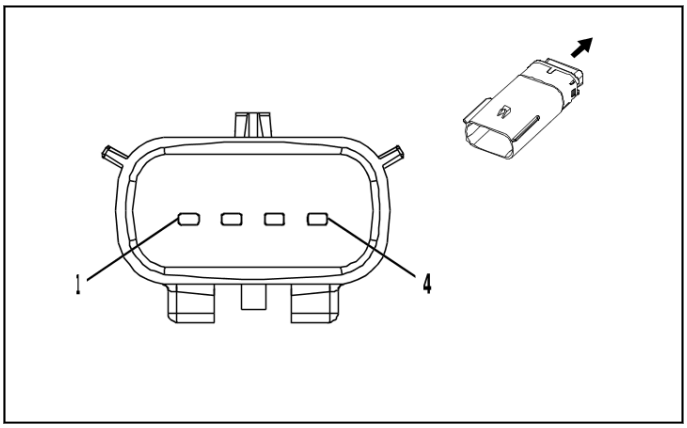

2917338

Connector Part Information
- Harness Type: Body Wiring Harness
- OEM Connector: 15514524
- Service Connector: 19355605
- Description: 4-Way F 1.5 OCS Series, Sealed(BK)

Connector Part Information
- Harness Type: Forward Range Radar Sensor Wiring Harness
- OEM Connector: 15514500
- Service Connector: Service by Harness - See Part Catalog
- Description: 4-Way M 1.5 OCS Series, Sealed(BK)

Terminal Part Information

Terminal Type ID	Terminated Lead	Diagnostic Test Probe	Terminal Removal Tool
I	Not required	J-35616-2A (GY)	No Tool Required
II	Not required	J-35616-3 (GY)	No Tool Required

X954 Body Wiring Harness to Forward Range Radar Sensor Wiring Harness

Pin	Size	Color	Circuit	Terminal Type ID	Option	Function	Pin	Size	Color	Circuit	Terminal Type ID	Option
(1) 1	(1) 0.5	(1) RD / GN	(1) 3140	(1) I	(1) —	(1) Battery Positive Voltage	(1) 1	(1) 0.5	(1) RD / GN	(1) 3140	(1) II	(1) —
(2) 2	(2) 0.35	(2) WH / GY	(2) 4104	(2) I	(2) —	(2) AUTOSAR CAN Bus [-] 8 Serial Data	(2) 2	(2) 0.35	(2) WH / GY	(2) 4104	(2) II	(2) —
(3) 3	(3) 0.35	(3) BU / GY	(3) 4105	(3) I	(3) —	(3) AUTOSAR CAN Bus [+] 8 Serial Data	(3) 3	(3) 0.35	(3) BU / GY	(3) 4105	(3) II	(3) —
(4) 4	(4) 0.75 (4) 0.5	(4) BK / WH (4) BK / WH	(4) 251 (4) 251	(4) I (4) I	(4) - UKL (4) UKL	(4) Signal Ground (4) Signal Ground	(4) 4	(4) 0.5	(4) BK / WH	(4) 251	(4) II	(4) —

X960 Roof Wiring Harness to Body Wiring Harness

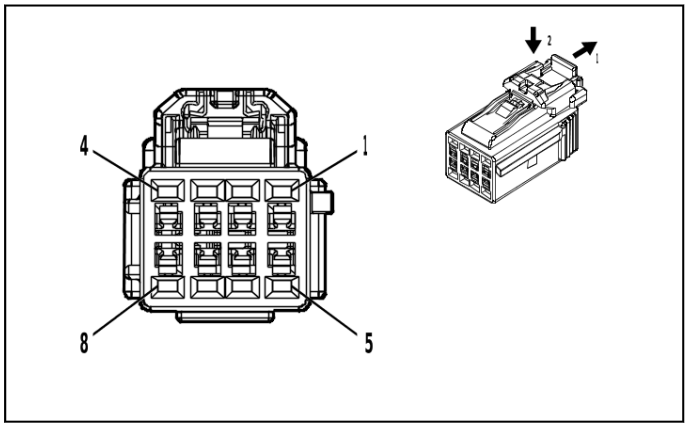

5086387

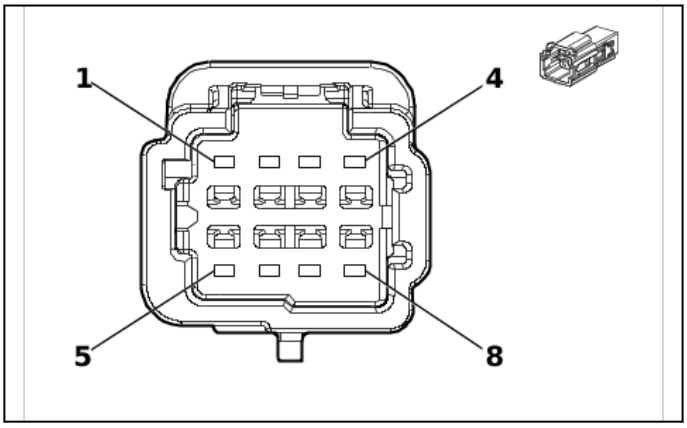

5751475

Connector Part Information
- Harness Type: Roof Wiring Harness
- OEM Connector: 6098-8443
- Service Connector: 84613126
- Description: 8-Way F 1.2 Series(BK)

Connector Part Information
- Harness Type: Body Wiring Harness
- OEM Connector: 6098-9129
- Service Connector: 86828134
- Description: 8-Way M 1.2 MBS Series(BK)

Terminal Part Information

Terminal Type ID	Terminated Lead	Diagnostic Test Probe	Terminal Removal Tool
I	Not required	J-35616-12 (BU)	No Tool Required
II	Not required	J-35616-16 (L-GN)	No Tool Required
III	Not required	J-35616-13 (BU)	No Tool Required
IV	Not required	J-35616-17 (L-GN)	No Tool Required

X960 Roof Wiring Harness to Body Wiring Harness

Pin	Size	Color	Circuit	Terminal Type ID	Option	Function	Pin	Size	Color	Circuit	Terminal Type ID	Option
(1) 1	(1) 0.5	(1) RD / GY	(1) 4840	(1) II	(1) —	(1) Battery Positive Voltage	(1) 1	(1) 0.5	(1) RD / GY	(1) 4840	(1) IV	(1) —
(2) 2	(2) 0.5	(2) WH / YE	(2) 11325	(2) II	(2) —	(2) Virtual Key Private CAN Bus [-] Serial Data	(2) 2	(2) 0.5	(2) WH / YE	(2) 11325	(2) IV	(2) —
(3) 3	(3) 0.5	(3) BU / BN	(3) 11326	(3) II	(3) —	(3) Virtual Key Private CAN Bus [+] Serial Data	(3) 3	(3) 0.5	(3) BU / BN	(3) 11326	(3) IV	(3) —
(4) 4	(4) 0.5	(4) BU / BN	(4) 11326	(4) II	(4) —	(4) Virtual Key Private CAN Bus [+] Serial Data	(4) 4	(4) 0.5	(4) BU / BN	(4) 11326	(4) IV	(4) —
(5) 5	(5) 0.5	(5) WH / YE	(5) 11325	(5) II	(5) —	(5) Virtual Key Private CAN Bus [-] Serial Data	(5) 5	(5) 0.5	(5) WH / YE	(5) 11325	(5) IV	(5) —
(6) 6	(6) 0.5	(6) BK	(6) 2050	(6) II	(6) —	(6) Ground	(6) 6	(6) 0.5	(6) BK	(6) 2050	(6) IV	(6) —
(7) 7	(7) 0.35	(7) GN / GY	(7) 737	(7) I	(7) —	(7) Rear Compartment Courtesy Lamp Control	(7) 7	(7) 0.35	(7) GN / GY	(7) 737	(7) III	(7) —
(8) 8	(8) 0.35	(8) BK	(8) 2050	(8) I	(8) —	(8) Ground	(8) 8	(8) 0.5	(8) BK	(8) 2050	(8) IV	(8) —

X961 Engine Wiring Harness to Valve Rocker Arm Oil Control Valve Extension Harness (L84 / L87)

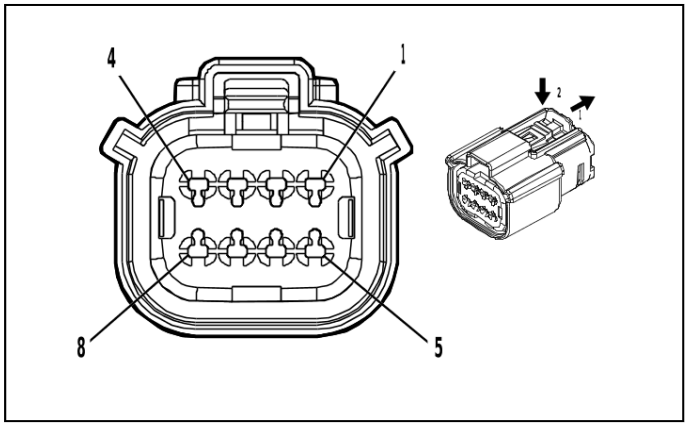

4846407

Connector Part Information

- Harness Type: Engine Wiring Harness
- OEM Connector: 33472-4806
- Service Connector: 84928314
- Description: 8-Way F 1.5 MX Series, Sealed(BK)

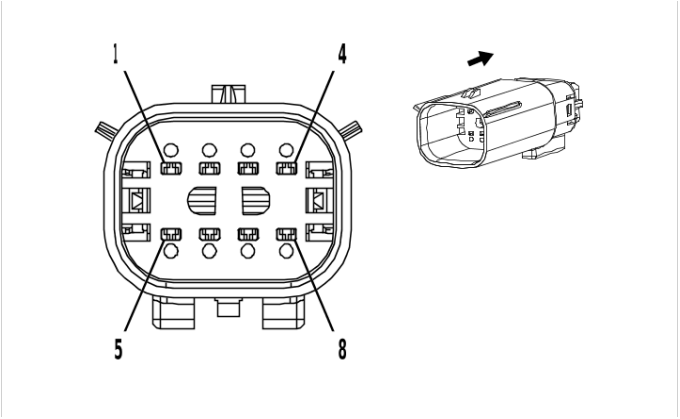

2667653

Connector Part Information

- Harness Type: Valve Rocker Arm Oil Control Valve Extension Harness
- OEM Connector: 33482-4801
- Service Connector: Service by Harness - See Part Catalog
- Description: 8-Way M 1.5 MX Series, Sealed(BK)

Terminal Part Information

Terminal Type ID	Terminated Lead	Diagnostic Test Probe	Terminal Removal Tool
I	Not required	J-35616-14 (GN)	No Tool Required
II	Not required	J-35616-2A (GY)	No Tool Required

X961 Engine Wiring Harness to Valve Rocker Arm Oil Control Valve Extension Harness (L84 / L87)

Pin	Size	Color	Circuit	Terminal Type ID	Option	Function	Pin	Size	Color	Circuit	Terminal Type ID	Option
(1) 1	(1) 0.5	(1) WH / GN	(1) 2492	(1) I	(1) —	(1) Cylinder Shutoff Solenoid Enable Signal 2	(1) 1	(1) 0.5	(1) WH / GN	(1) 2492	(1) II	(1) —
(2) 2	(2) 0.5	(2) GN	(2) 5492	(2) I	(2) —	(2) Cylinder Deactivation Solenoid Valve Control 2	(2) 2	(2) 0.5	(2) GN	(2) 5492	(2) II	(2) —
(3) 3	(3) 0.5	(3) YE / GY	(3) 2493	(3) I	(3) —	(3) Cylinder Shutoff Solenoid Enable Signal 3	(3) 3	(3) 0.5	(3) YE / GY	(3) 2493	(3) II	(3) —
(4) 4	(4) 0.5	(4) GY	(4) 5493	(4) I	(4) —	(4) Cylinder Deactivation Solenoid Valve Control 3	(4) 4	(4) 0.5	(4) GY	(4) 5493	(4) II	(4) —
(5) 5	(5) 0.5	(5) WH / VT	(5) 2495	(5) I	(5) —	(5) Cylinder Shutoff Solenoid Enable Signal 5	(5) 5	(5) 0.5	(5) WH / VT	(5) 2495	(5) II	(5) —
(6) 6	(6) 0.5	(6) VT	(6) 5495	(6) I	(6) —	(6) Cylinder Deactivation Solenoid Valve Control 5	(6) 6	(6) 0.5	(6) VT	(6) 5495	(6) II	(6) —
(7) 7	(7) 0.5	(7) WH / YE	(7) 2498	(7) I	(7) —	(7) Cylinder Shutoff Solenoid Enable Signal 8	(7) 7	(7) 0.5	(7) WH / YE	(7) 2498	(7) II	(7) —
(8) 8	(8) 0.5	(8) YE	(8) 5498	(8) I	(8) —	(8) Cylinder Deactivation Solenoid Valve Control 8	(8) 8	(8) 0.5	(8) YE	(8) 5498	(8) II	(8) —

X962 Engine Wiring Harness to Valve Rocker Arm Oil Control Valve Extension Harness (L84 / L87)

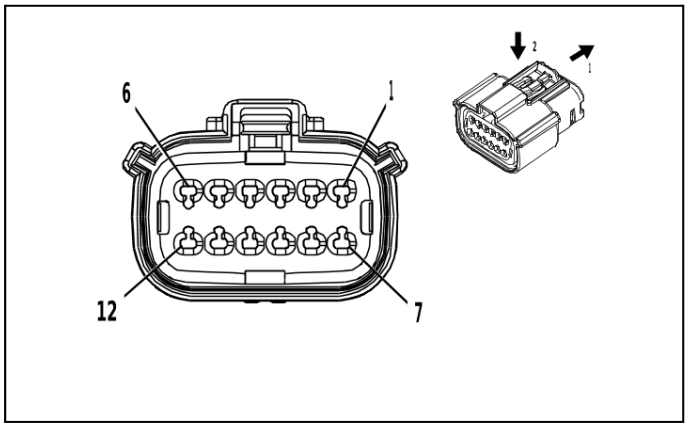

2871860

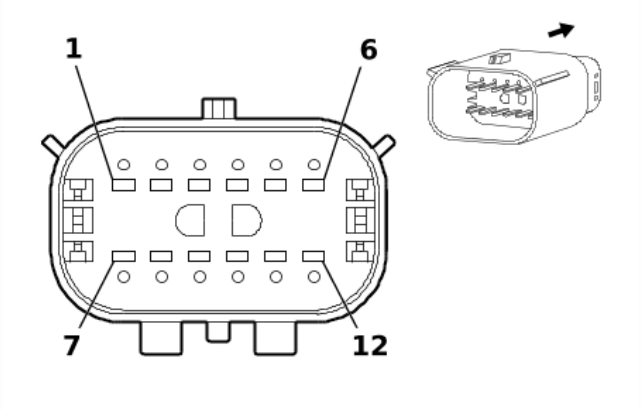

1825167

Connector Part Information
- Harness Type: Engine Wiring Harness
- OEM Connector: 33472-1266
- Service Connector: 19352907
- Description: 12-Way F 1.5 MX Series, Sealed(BK)

Connector Part Information
- Harness Type: Valve Rocker Arm Oil Control Valve Extension Harness
- OEM Connector: 33482-6260
- Service Connector: Service by Harness - See Part Catalog
- Description: 12-Way M 1.5 MX Series, Sealed(BK)

Terminal Part Information

Terminal Type ID	Terminated Lead	Diagnostic Test Probe	Terminal Removal Tool
I	85528055	J-35616-2A (GY)	J-38125-217
II	Not required	J-35616-2A (GY)	No Tool Required

X962 Engine Wiring Harness to Valve Rocker Arm Oil Control Valve Extension Harness (L84 / L87)

Pin	Size	Color	Circuit	Terminal Type ID	Option	Function	Pin	Size	Color	Circuit	Terminal Type ID	Option
(1) 1	(1) 0.5	(1) WH / BU	(1) 2491	(1) I	(1) —	(1) Cylinder Shutoff Solenoid Enable Signal 1	(1) 1	(1) 0.5	(1) WH / BU	(1) 2491	(1) II	(1) —
(2) 2	(2) 0.5	(2) BU	(2) 5491	(2) I	(2) —	(2) Cylinder Deactivation Solenoid Valve Control 1	(2) 2	(2) 0.5	(2) BU	(2) 5491	(2) II	(2) —
(3) 3	(3) 0.5	(3) YE / GN	(3) 2494	(3) I	(3) —	(3) Cylinder Shutoff Solenoid Enable Signal 4	(3) 3	(3) 0.5	(3) YE / GN	(3) 2494	(3) II	(3) —
(4) 4	(4) 0.5	(4) YE / BU	(4) 5494	(4) I	(4) —	(4) Cylinder Deactivation Solenoid Valve Control 4	(4) 4	(4) 0.5	(4) YE / BU	(4) 5494	(4) II	(4) —
(5) 5	(5) 0.5	(5) YE / BN	(5) 2496	(5) I	(5) —	(5) Cylinder Shutoff Solenoid Enable Signal 6	(5) 5	(5) 0.5	(5) YE / BN	(5) 2496	(5) II	(5) —

Pin	Size	Color	Circuit	Terminal Type ID	Option	Function	Pin	Size	Color	Circuit	Terminal Type ID	Option
(6) 6	(6) 0.5	(6) BN	(6) 5496	(6) I	(6) —	(6) Cylinder Deactivation Solenoid Valve Control 6	(6) 6	(6) 0.5	(6) BN	(6) 5496	(6) II	(6) —
(7) 7	(7) 0.5	(7) GN / GY	(7) 2497	(7) I	(7) —	(7) Cylinder Shutoff Solenoid Enable Signal 7	(7) 7	(7) 0.5	(7) GN / GY	(7) 2497	(7) II	(7) —
(8) 8	(8) 0.5	(8) WH	(8) 5497	(8) I	(8) —	(8) Cylinder Deactivation Solenoid Valve Control 7	(8) 8	(8) 0.5	(8) WH	(8) 5497	(8) II	(8) —
(9) 9	(9) 0.5	(9) BU	(9) 410	(9) I	(9) —	(9) Engine Coolant Temperature Sensor Signal	(9) 9	(9) 0.5	(9) BU	(9) 410	(9) II	(9) —
(10) 10	(10) 0.5	(10) BK / YE	(10) 548	(10) I	(10) —	(10) Engine Control Sensors Low Reference 1	(10) 10	(10) 0.5	(10) BK / YE	(10) 548	(10) II	(10) —
11 - 12	—	—	—	—	—	Not Occupied	11 - 12	—	—	—	—	—

X963 Valve Rocker Arm Oil Control Valve Extension Harness to Valve Rocker Arm Oil Control Valve Harness (L84 / L87)

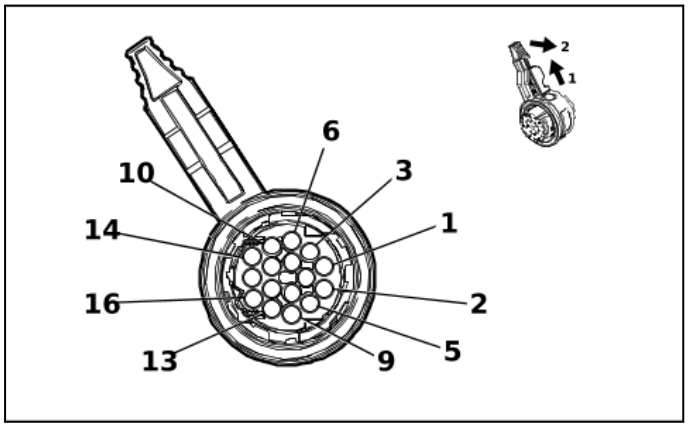

5573634

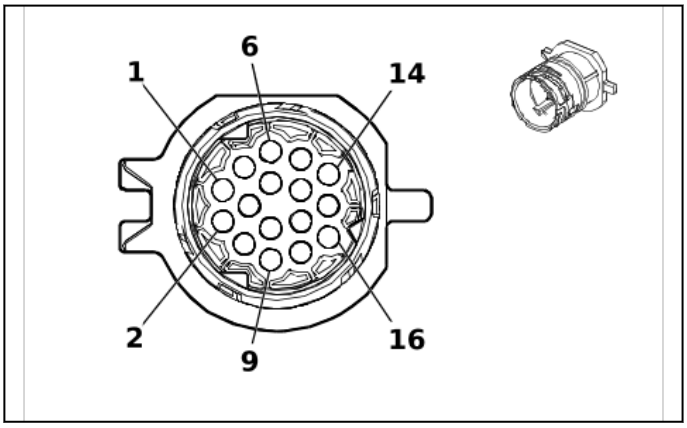

5575849

Connector Part Information

- Harness Type: Valve Rocker Arm Oil Control Valve Extension Harness
- OEM Connector: 10534553
- Service Connector: Service by Harness - See Part Catalog
- Description: 16-Way F 1.5 RK Series, Sealed(BK)

Connector Part Information

- Harness Type: Valve Rocker Arm Oil Control Valve Harness
- OEM Connector: 10140573
- Service Connector: Service by Harness - See Part Catalog
- Description: 16-Way M 1.5 RK Series, Sealed(BK)

Terminal Part Information

Terminal Type ID	Terminated Lead	Diagnostic Test Probe	Terminal Removal Tool
I	Not required	J-35616-3 (GY)	No Tool Required
II	Not required	J-35616-3 (GY)	No Tool Required

X963 Valve Rocker Arm Oil Control Valve Extension Harness to Valve Rocker Arm Oil Control Valve Harness (L84 / L87)

Pin	Size	Color	Circuit	Terminal Type ID	Option	Function	Pin	Size	Color	Circuit	Terminal Type ID	Option
(1) 1	(1) 0.5	(1) WH / GN	(1) 2492	(1) I	(1) —	(1) Cylinder Shutoff Solenoid Enable Signal 2	(1) 1	(1) 0.5	(1) WH / GN	(1) 2492	(1) II	(1) —
(2) 2	(2) 0.5	(2) GN	(2) 5492	(2) I	(2) —	(2) Cylinder Deactivation Solenoid Valve Control 2	(2) 2	(2) 0.5	(2) GN	(2) 5492	(2) II	(2) —
(3) 3	(3) 0.5	(3) YE / GY	(3) 2493	(3) I	(3) —	(3) Cylinder Shutoff Solenoid Enable Signal 3	(3) 3	(3) 0.5	(3) YE / GY	(3) 2493	(3) II	(3) —
(4) 4	(4) 0.5	(4) GY	(4) 5493	(4) I	(4) —	(4) Cylinder Deactivation Solenoid Valve Control 3	(4) 4	(4) 0.5	(4) GY	(4) 5493	(4) II	(4) —
(5) 5	(5) 0.5	(5) WH / VT	(5) 2495	(5) I	(5) —	(5) Cylinder Shutoff Solenoid Enable Signal 5	(5) 5	(5) 0.5	(5) WH / VT	(5) 2495	(5) II	(5) —
(6) 6	(6) 0.5	(6) VT	(6) 5495	(6) I	(6) —	(6) Cylinder Deactivation Solenoid Valve Control 5	(6) 6	(6) 0.5	(6) VT	(6) 5495	(6) II	(6) —
(7) 7	(7) 0.5	(7) WH / YE	(7) 2498	(7) I	(7) —	(7) Cylinder Shutoff Solenoid Enable Signal 8	(7) 7	(7) 0.5	(7) WH / YE	(7) 2498	(7) II	(7) —
(8) 8	(8) 0.5	(8) YE	(8) 5498	(8) I	(8) —	(8) Cylinder Deactivation Solenoid Valve Control 8	(8) 8	(8) 0.5	(8) YE	(8) 5498	(8) II	(8) —
(9) 9	(9) 0.5	(9) WH / BU	(9) 2491	(9) I	(9) —	(9) Cylinder Shutoff Solenoid Enable Signal 1	(9) 9	(9) 0.5	(9) WH / BU	(9) 2491	(9) II	(9) —
(10) 10	(10) 0.5	(10) BU	(10) 5491	(10) I	(10) —	(10) Cylinder Deactivation Solenoid Valve Control 1	(10) 10	(10) 0.5	(10) BU	(10) 5491	(10) II	(10) —
(11) 11	(11) 0.5	(11) YE / GN	(11) 2494	(11) I	(11) —	(11) Cylinder Shutoff Solenoid Enable Signal 4	(11) 11	(11) 0.5	(11) YE / GN	(11) 2494	(11) II	(11) —
(12) 12	(12) 0.5	(12) YE / BU	(12) 5494	(12) I	(12) —	(12) Cylinder Deactivation Solenoid Valve Control 4	(12) 12	(12) 0.5	(12) YE / BU	(12) 5494	(12) II	(12) —

Pin	Size	Color	Circuit	Terminal Type ID	Option	Function	Pin	Size	Color	Circuit	Terminal Type ID	Option
(13) 13	(13) 0.5	(13) Y E / BN	(13) 24 96	(13) I	(13) —	(13) Cylinder Shutoff Solenoid Enable Signal 6	(13) 13	(13) 0.5	(13) Y E / BN	(13) 24 96	(13) II	(13) —
(14) 14	(14) 0.5	(14) B N	(14) 54 96	(14) I	(14) —	(14) Cylinder Deactivation Solenoid Valve Control 6	(14) 14	(14) 0.5	(14) B N	(14) 54 96	(14) II	(14) —
(15) 15	(15) 0.5	(15) G N / GY	(15) 24 97	(15) I	(15) —	(15) Cylinder Shutoff Solenoid Enable Signal 7	(15) 15	(15) 0.5	(15) G N / GY	(15) 24 97	(15) II	(15) —
(16) 16	(16) 0.5	(16) WH	(16) 54 97	(16) I	(16) —	(16) Cylinder Deactivation Solenoid Valve Control 7	(16) 16	(16) 0.5	(16) WH	(16) 54 97	(16) II	(16) —

X995D Rearview Driver Information Camera Rear Closure Coaxial Cable to Rear License Plate Lamp Wiring Harness (DRZ)

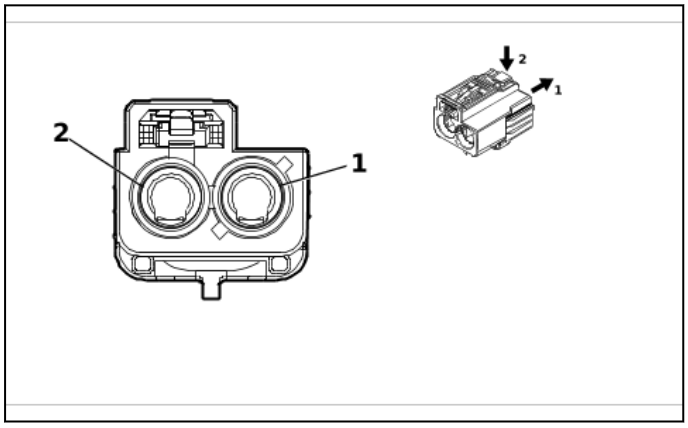

6049284

Connector Part Information

- Harness Type: Rearview Driver Information Camera Rear Closure Coaxial Cable COAX
- OEM Connector: Not Available
- Service Connector: Service by Cable Assembly — See Part Catalog
- Description: 2-Way F

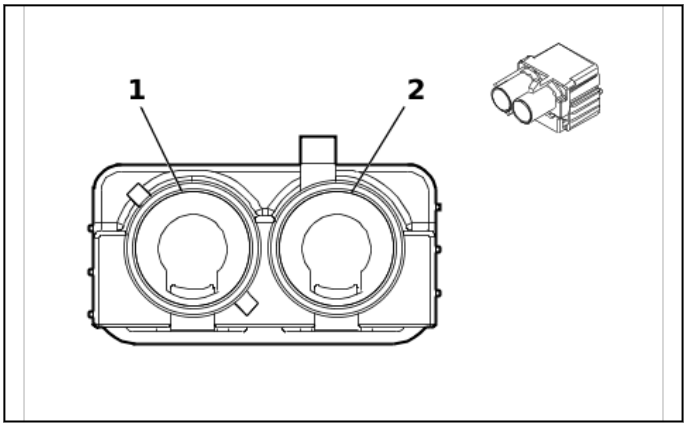

5873713

Connector Part Information

- Harness Type: Rear License Plate Lamp Wiring Harness COAX
- OEM Connector: 33351073
- Service Connector: Service by Cable Assembly — See Part Catalog
- Description: 2-Way M Coax Type(BU)

Terminal Part Information

Terminal Type ID	Terminated Lead	Diagnostic Test Probe	Terminal Removal Tool
I	Not required	No Tool Required	No Tool Required

X995D Rearview Driver Information Camera Rear Closure Coaxial Cable to Rear License Plate Lamp Wiring Harness (DRZ)

Pin	Size	Color	Circuit	Terminal Type ID	Option	Function	Pin	Size	Color	Circuit	Terminal Type ID	Option
(1) 1	(1) 0.4	(1) Coax Cable	(1) 4721	(1) I	(1) —	(1) Rearview Camera LVDS (Low Voltage Differential Signaling) Coaxial Signal	(1) 1	(1) 0.4	(1) Coax Cable	(1) 4721	(1) II	(1) —
(2) 2	(2) 0.4	(2) Coax Cable	(2) 2387	(2) I	(2) —	(2) Full Display Mirror Rear Camera LVDS (Low Voltage Differential Signaling) Coaxial Signal	(2) 2	(2) 0.4	(2) Coax Cable	(2) 2387	(2) II	(2) —

X995R Body Wiring Harness to Rearview Driver Information Camera Rear Closure Coaxial Cable

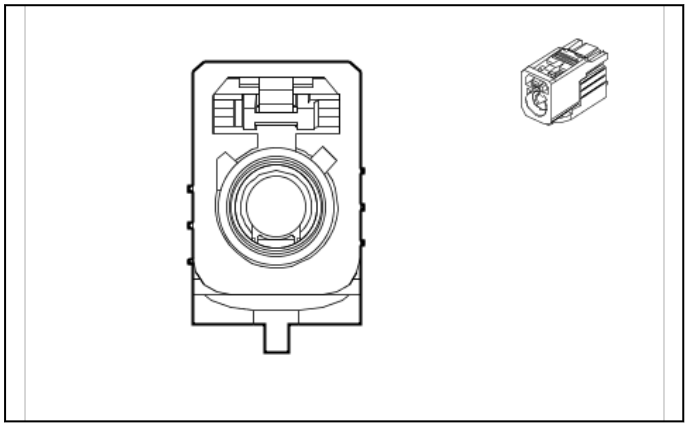

5633890

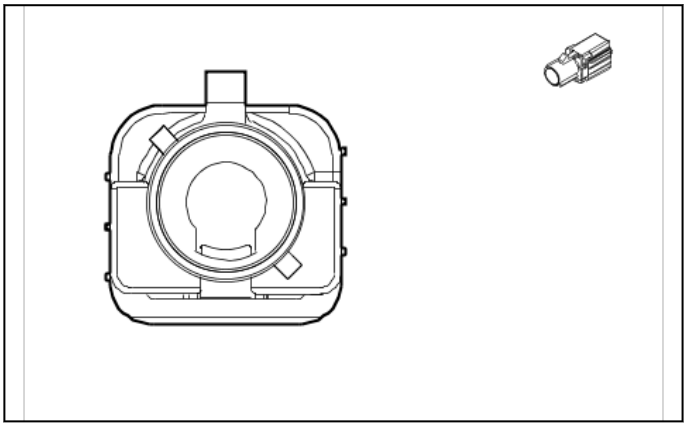

5873701

Connector Part Information
- Harness Type: Body Wiring Harness COAX
- OEM Connector: 33351011
- Service Connector: Service by Cable Assembly — See Part Catalog
- Description: 1-Way F Coax Type(WH)

Connector Part Information
- Harness Type: Rearview Driver Information Camera Rear Closure Coaxial Cable COAX
- OEM Connector: Not Available
- Service Connector: Service by Cable Assembly — See Part Catalog
- Description: 1-Way M (WH)

Terminal Part Information

Terminal Type ID	Terminated Lead	Diagnostic Test Probe	Terminal Removal Tool
I	Not required	No Tool Required	No Tool Required

X995R Body Wiring Harness to Rearview Driver Information Camera Rear Closure Coaxial Cable

Pin	Size	Color	Circuit	Terminal Type ID	Option	Function	Pin	Size	Color	Circuit	Terminal Type ID	Option
—	—	Coax Cable	—	I	—	Rear Vision Camera Coaxial Video Signal	—	—	Coax Cable	—	I	—

X995S Rearview Driver Information Camera Rear Closure Coaxial Cable to Rear License Plate Lamp Wiring Harness (- DRZ)

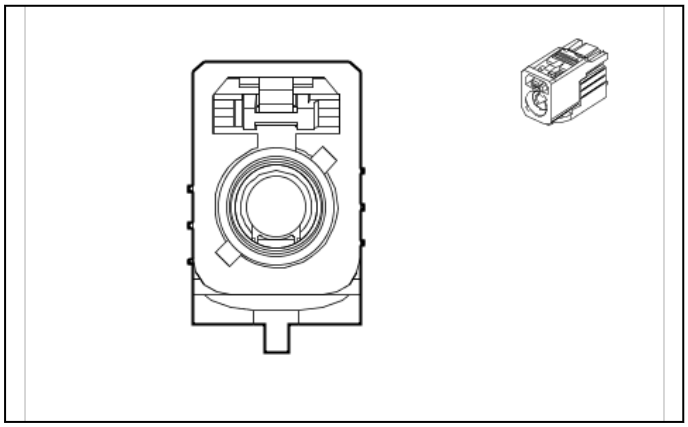

6267120

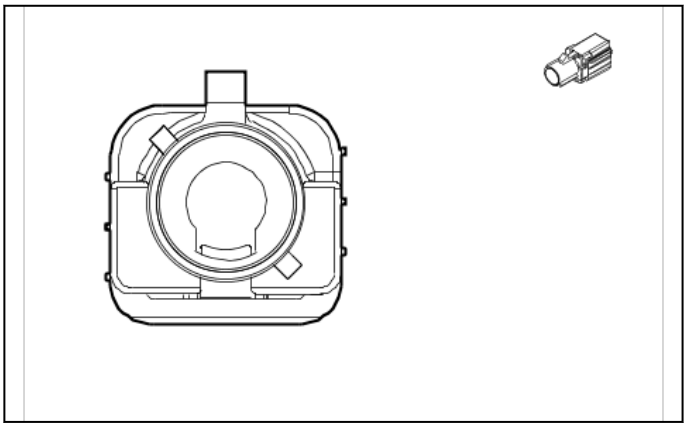

5873701

Connector Part Information

- Harness Type: Rearview Driver Information Camera Rear Closure Coaxial Cable COAX
- OEM Connector: Not Available
- Service Connector: Service by Cable Assembly — See Part Catalog
- Description: 1-Way F

Connector Part Information

- Harness Type: Rear License Plate Lamp Wiring Harness COAX
- OEM Connector: 33351038
- Service Connector: Service by Cable Assembly — See Part Catalog
- Description: 1-Way M Coax Type(BU)

Terminal Part Information

Terminal Type ID	Terminated Lead	Diagnostic Test Probe	Terminal Removal Tool
I	Not required	No Tool Required	No Tool Required

X995S Rearview Driver Information Camera Rear Closure Coaxial Cable to Rear License Plate Lamp Wiring Harness (- DRZ)

Pin	Size	Color	Circuit	Terminal Type ID	Option	Function	Pin	Size	Color	Circuit	Terminal Type ID	Option
—	—	Coax Cable	—	I	—	Rear Vision Camera Coaxial Video Signal	—	—	Coax Cable	—	I	—

X996 Antenna Coaxial Cable to Antenna Coaxial Cable Jumper (DRZ)

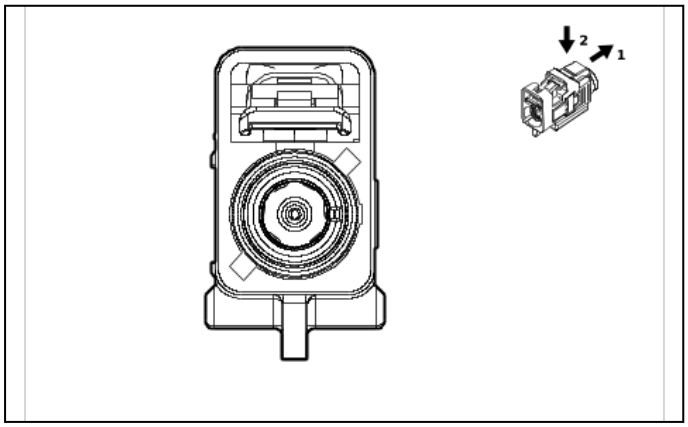

6686775

—

Connector Part Information

- Harness Type: Antenna Coaxial Cable COAX
- OEM Connector: 13545977
- Service Connector: Service by Cable Assembly — See Part Catalog
- Description: 1-Way F Coax Type(BU)

Connector Part Information

- Harness Type: Antenna Coaxial Cable Jumper COAX
- OEM Connector: Not Available
- Service Connector: Service by Cable Assembly — See Part Catalog
- Description: 1-Way M (BU)

Terminal Part Information

Terminal Type ID	Terminated Lead	Diagnostic Test Probe	Terminal Removal Tool
I	Not required	No Tool Required	No Tool Required

X996 Antenna Coaxial Cable to Antenna Coaxial Cable Jumper (DRZ)

Pin	Size	Color	Circuit	Terminal Type ID	Option	Function	Pin	Size	Color	Circuit	Terminal Type ID	Option
—	—	Coax Cable	—	I	—	Full Display Mirror Rear Camera Coaxial Video Signal	—	—	Coax Cable	—	I	—

X999 Chassis Wiring Harness to Reductant Control Module Jumper Wiring Harness (LZ0)

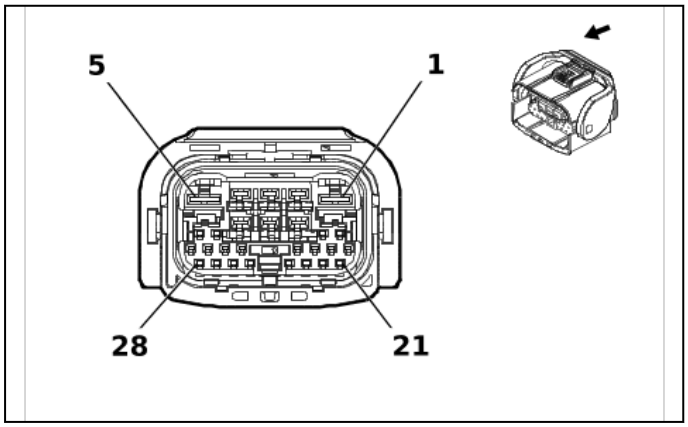

6572042

—

Connector Part Information
- Harness Type: Chassis Wiring Harness
- OEM Connector: 7298-4827-30
- Service Connector: 85761013
- Description: 28-Way F 1.2 MLK, 2.8, 6.3 YESC Series(BK)

Connector Part Information
- Harness Type: Reductant Control Module Jumper Wiring Harness
- OEM Connector: Not Available
- Service Connector: Service by Harness - See Part Catalog
- Description: 28-Way M (BK)

Terminal Part Information

Terminal Type ID	Terminated Lead	Diagnostic Test Probe	Terminal Removal Tool
I	13575383	J-35616-42 (RD)	J-38125-11A
II	19368324	J-35616-35 (VT)	J-38125-11A
III	85669160	J-35616-12 (BU)	J-38125-215A
IV	Not required	No Tool Required	No Tool Required

X999 Chassis Wiring Harness to Reductant Control Module Jumper Wiring Harness (LZ0)

Pin	Size	Color	Circuit	Terminal Type ID	Option	Function	Pin	Size	Color	Circuit	Terminal Type ID	Option
(1) 1	(1) 2.5	(1) RD / WH	(1) 3440	(1) I	(1) —	(1) Battery Positive Voltage	(1) 1	(1) 2.5	(1) BK	(1) 3440	(1) IV	(1) —
2 - 4	—	—	—	—	—	Not Occupied	2 - 4	—	—	—	—	—
(5) 5	(5) 3	(5) BK	(5) 1650	(5) I	(5) —	(5) Ground	(5) 5	(5) 3	(5) WH	(5) 1650	(5) IV	(5) —
6	—	—	—	—	—	Not Occupied	6	—	—	—	—	—
(7) 7	(7) 0.5	(7) RD / WH	(7) 2040	(7) II	(7) —	(7) Battery Positive Voltage	(7) 7	(7) 0.5	(7) RD	(7) 2040	(7) IV	(7) —
8 - 14	—	—	—	—	—	Not Occupied	8 - 14	—	—	—	—	—
(15) 15	(15) 0.5	(15) VT / BK	(15) 2139	(15) III	(15) —	(15) Run/ Crank Ignition 1 Voltage	(15) 15	(15) 0.5	(15) BN	(15) 2139	(15) IV	(15) —
(16) 16	(16) 0.5	(16) BU	(16) 4987	(16) III	(16) —	(16) AUTOSAR CAN Bus [+] 1 Serial Data	(16) 16	(16) 0.5	(16) BU	(16) 4987	(16) IV	(16) —

Pin	Size	Color	Circuit	Terminal Type ID	Option	Function	Pin	Size	Color	Circuit	Terminal Type ID	Option
(17) 17	(17) 0.5	(17) BU / GN	(17) 49 87	(17) III	(17) —	(17) AUTOSAR CAN Bus [+] 1 Serial Data	(17) 17	(17) 0.5	(17) BU	(17) 49 87	(17) IV	(17) —
18 - 23	—	—	—	—	—	Not Occupied	18 - 23	—	—	—	—	—
(24) 24	(24) 0.5	(24) WH	(24) 49 86	(24) III	(24) —	(24) AUTOSAR CAN Bus [-] 1 Serial Data	(24) 24	(24) 0.5	(24) BN	(24) 49 86	(24) IV	(24) —
(25) 25	(25) 0.5	(25) WH / BU	(25) 49 86	(25) III	(25) —	(25) AUTOSAR CAN Bus [-] 1 Serial Data	(25) 25	(25) 0.5	(25) BN	(25) 49 86	(25) IV	(25) —
26 - 28	—	—	—	—	—	Not Occupied	26 - 28	—	—	—	—	—

Electrical Component Locator and Harness Routing Views

Schematic and Routing Diagrams

Front Object Alarm Sensor Wiring Harness Routing (UKL)

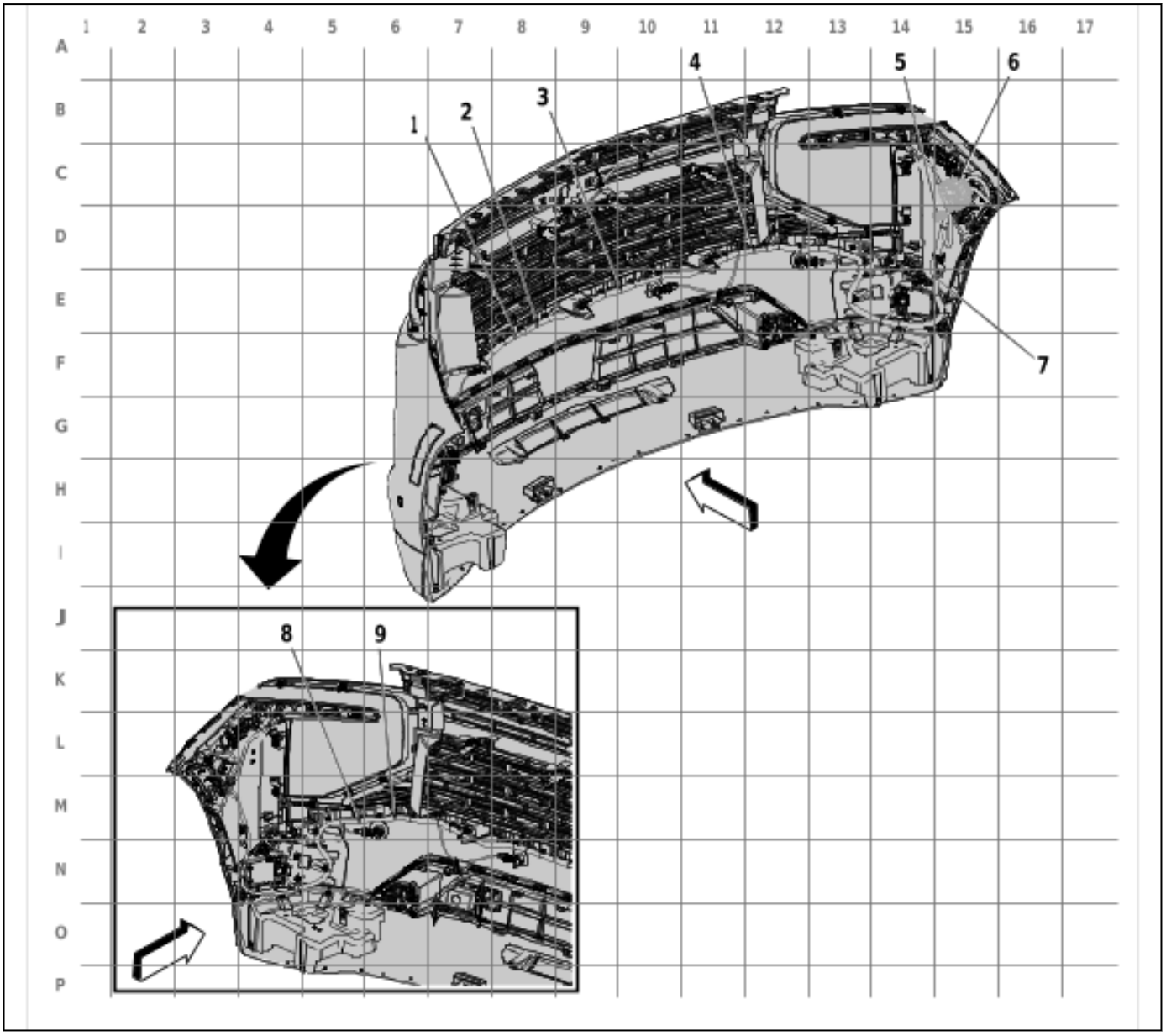

6666257

Items
(1) J133 Front Object Alarm Sensor Wiring Harness
(2) J108 Front Object Alarm Sensor Wiring Harness (T40)
(3) J141 Front Object Alarm Sensor Wiring Harness
(4) J105 Front Object Alarm Sensor Wiring Harness (T40)
(5) X951 Front Object Alarm Sensor Wiring Harness to Body Wiring Harness
(6) X950 Front Object Alarm Sensor Wiring Harness to Body Wiring Harness
(7) J178 Front Object Alarm Sensor Wiring Harness (T40)

Items
(8) J102 Front Object Alarm Sensor Wiring Harness
(9) J103 Front Object Alarm Sensor Wiring Harness (UKZ)

Front Object Alarm Sensor Wiring Harness Routing (- UKL)

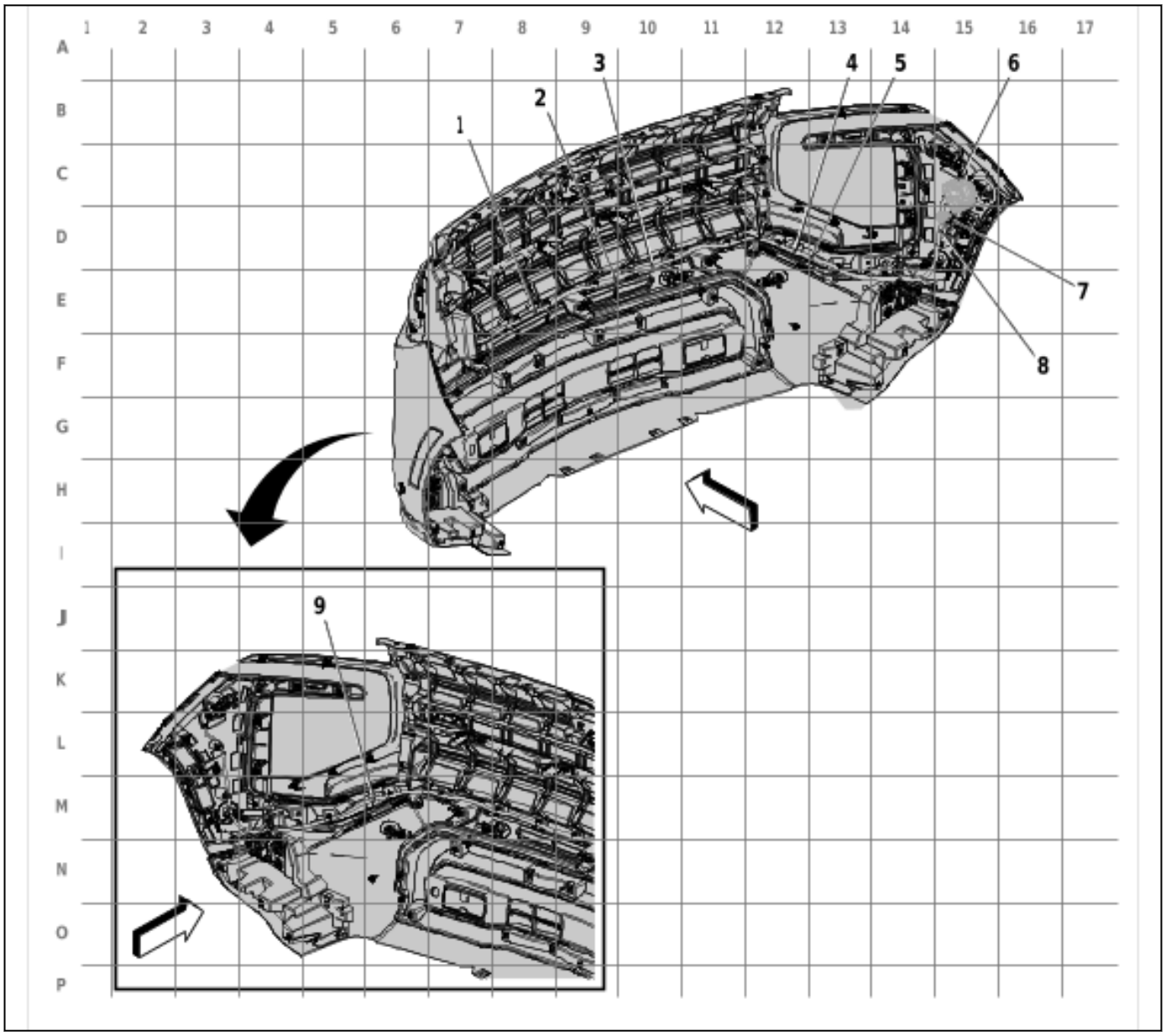

6666258

Items
(1) J102 Front Object Alarm Sensor Wiring Harness
(2) J105 Front Object Alarm Sensor Wiring Harness (T40)
(3) J141 Front Object Alarm Sensor Wiring Harness
(4) J133 Front Object Alarm Sensor Wiring Harness
(5) J108 Front Object Alarm Sensor Wiring Harness (T40)
(6) X950 Front Object Alarm Sensor Wiring Harness to Body Wiring Harness
(7) X951 Front Object Alarm Sensor Wiring Harness to Body Wiring Harness

Items
(8) J178 Front Object Alarm Sensor Wiring Harness (T40)
(9) J103 Front Object Alarm Sensor Wiring Harness (UKZ)

Active Grille Air Shutter Harness Routing (VTI)

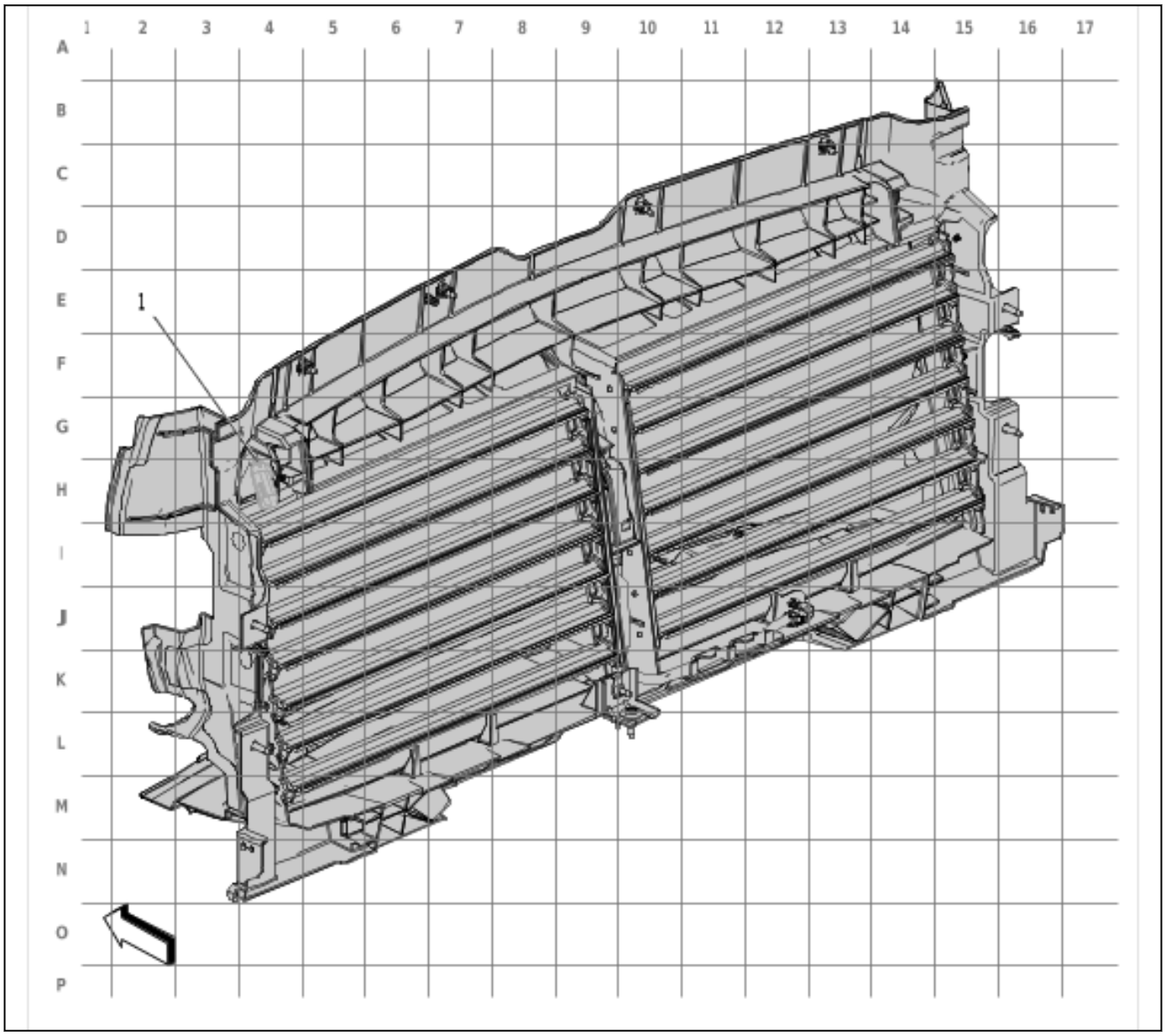

6691848

Items
(1) X604A Engine Harness to Active Grille Air Shutter Harness

Active Grille Air Shutter Harness Routing (WMI)

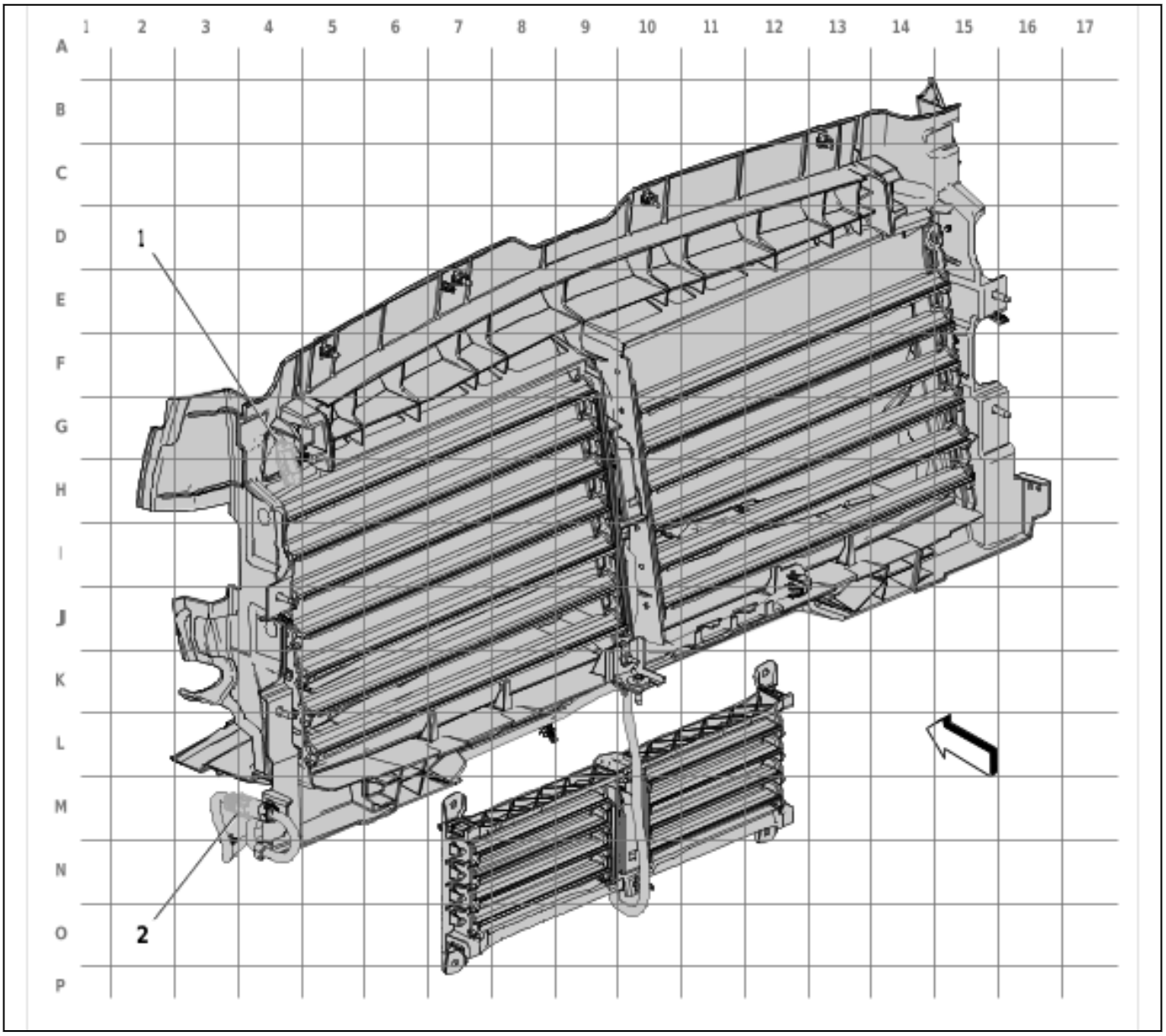

6691849

Items
(1) X604A Engine Harness to Active Grille Air Shutter Harness
(2) X604B Aeroshutter Extension Wiring Harness to Aeroshutter Jumper Wiring Harness (WMI)

Power Steering Wiring Harness Routing

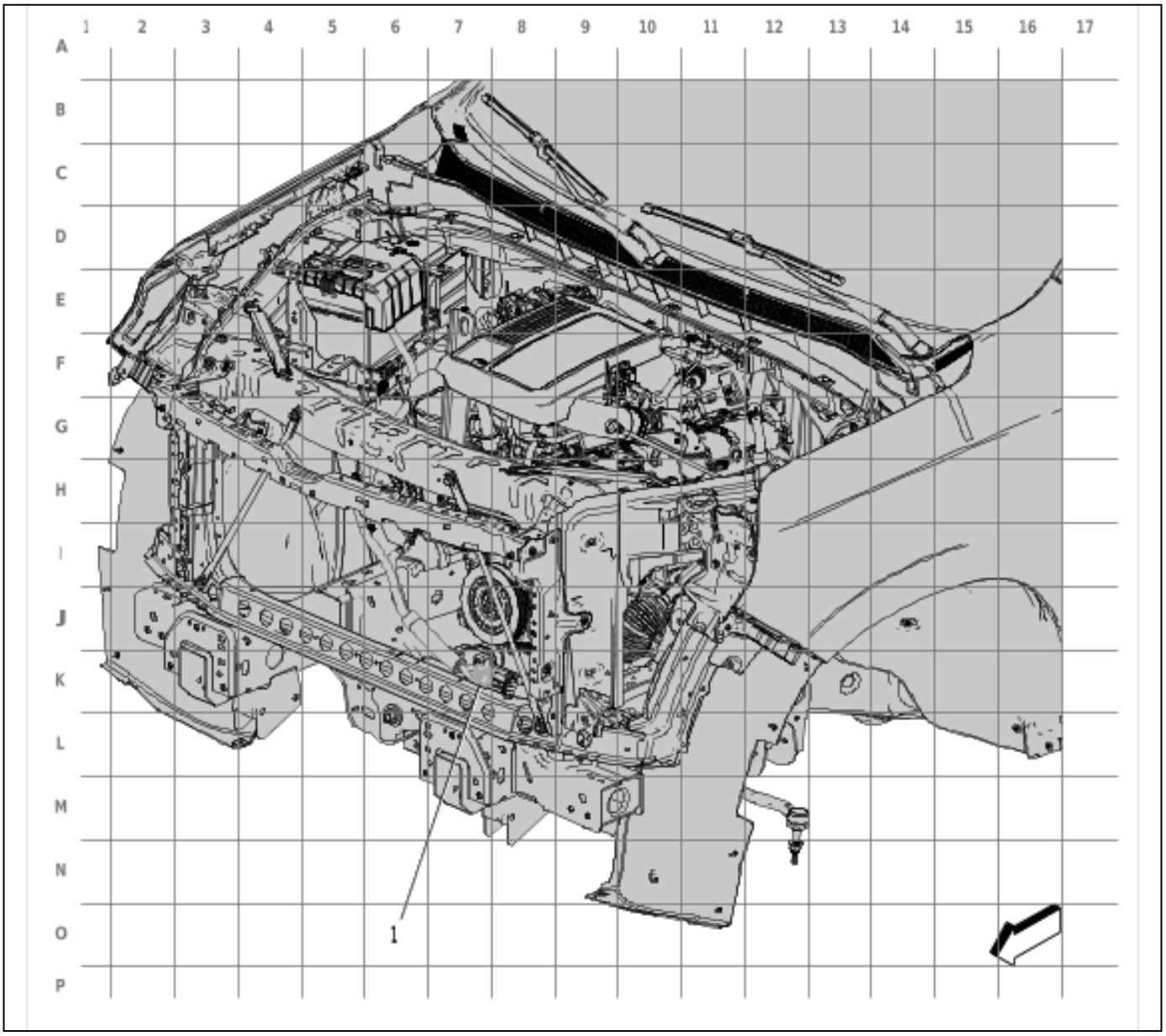

6678292

Items
(1) X405P Power Steering Wiring Harness to Power Steering Control Module Wiring Harness

Body Wiring Harness - Front Compartment

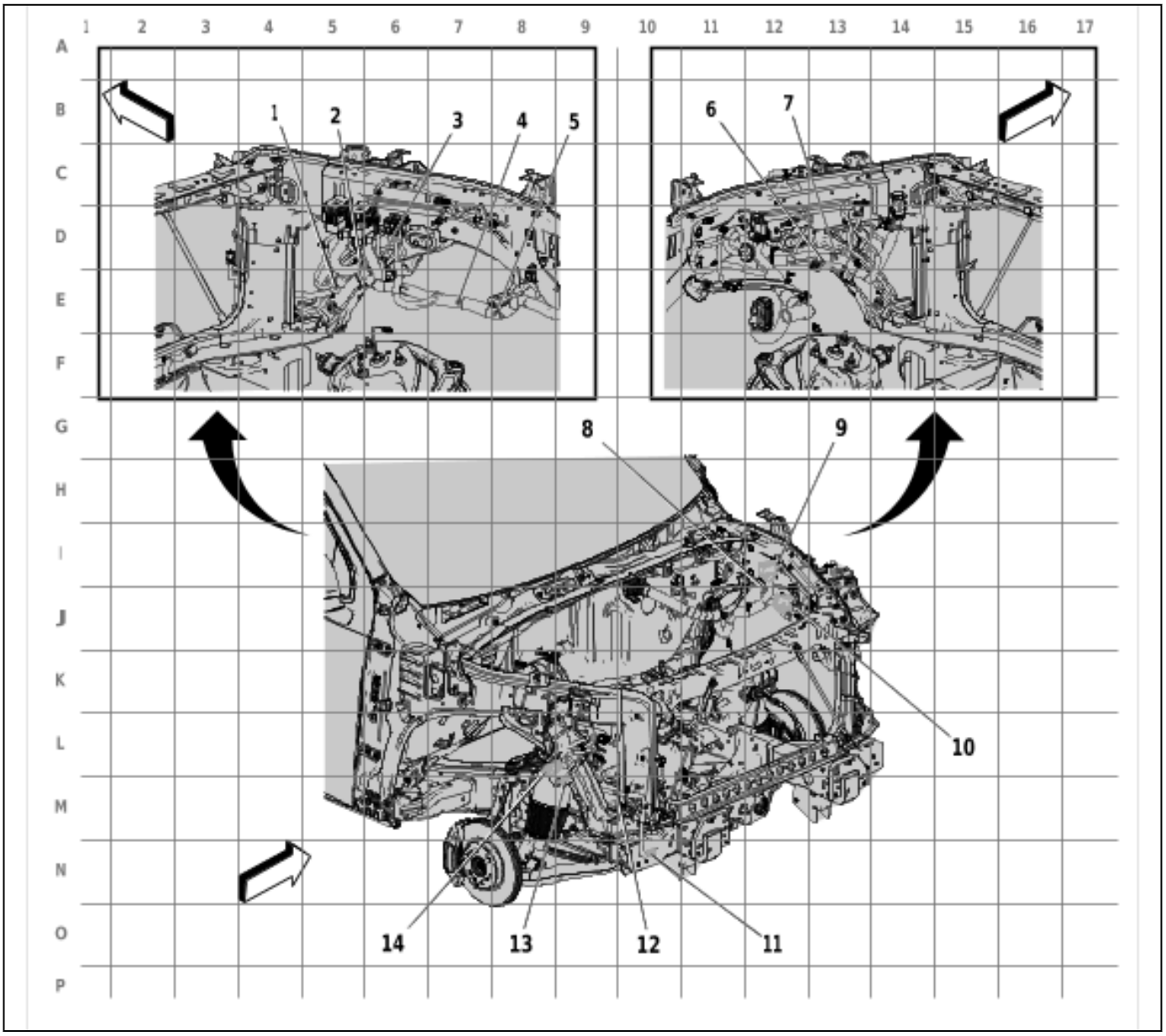

6682069

Items
(1) J171 Body Wiring Harness
(2) J173 Body Wiring Harness
(3) J179 Body Wiring Harness
(4) J177 Body Wiring Harness
(5) J175 Body Wiring Harness
(6) R6AD Terminating Resistor - High Speed CAN Bus 4 (-(UKI / UKW))
(7) J129 Body Wiring Harness
(8) J132 Body Wiring Harness
(9) X400 Chassis Wiring Harness to Body Wiring Harness
(10) X125 Engine Wiring Harness to Body Wiring Harness
(11) X954 Body Wiring Harness to Forward Range Radar Sensor Wiring Harness

Items
(12) J174 Body Wiring Harness
(13) X951 Front Object Alarm Sensor Wiring Harness to Body Wiring Harness
(14) X950 Front Object Alarm Sensor Wiring Harness to Body Wiring Harness

Camshaft Position Sensor Wire Routing (L87)

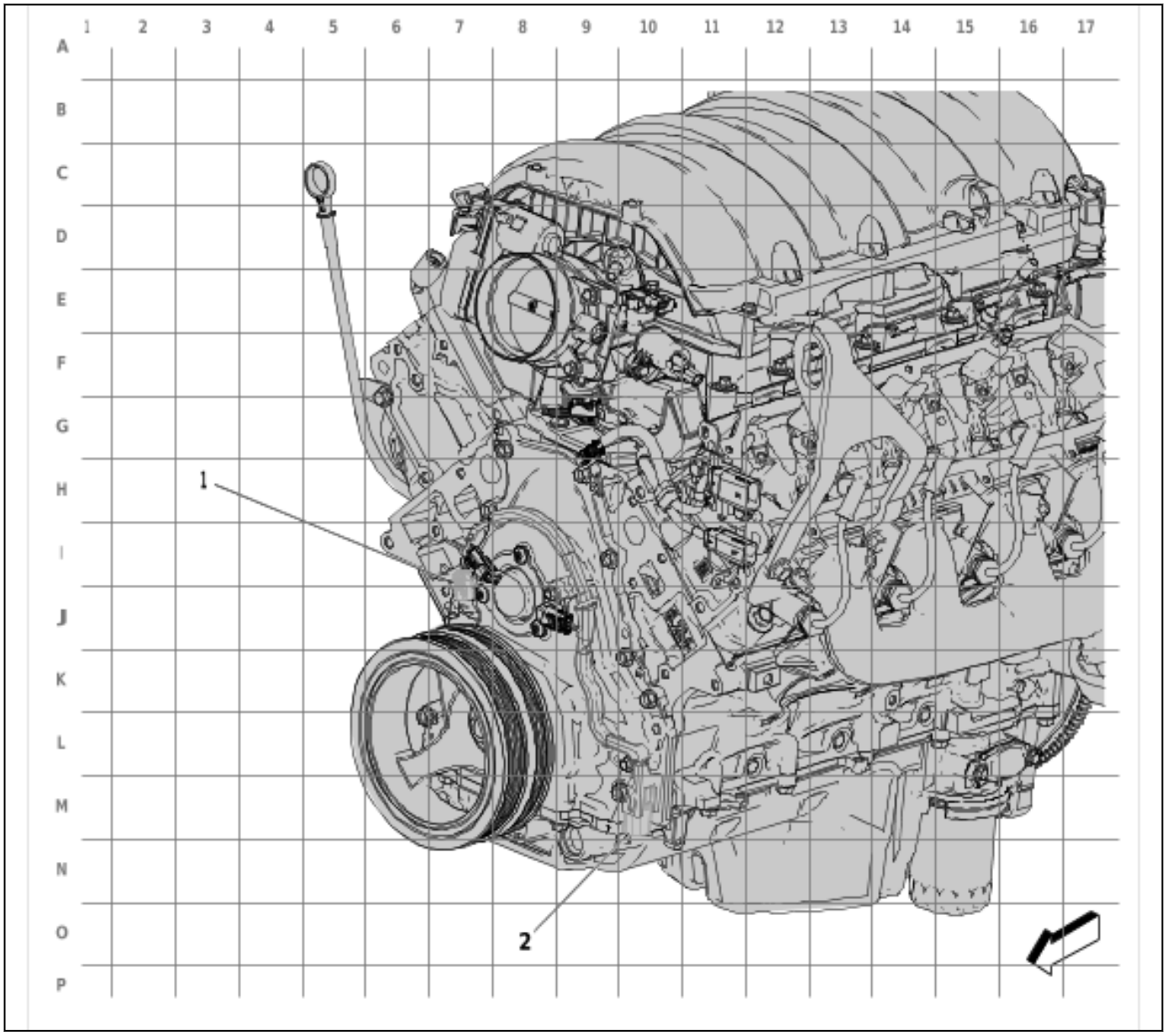

6666127

Items
(2) X128C Engine Wiring Harness to Valve Rocker Arm Oil Control Valve Extension Harness (L84 / L87)

Oil Pump Flow Control Solenoid Valve Harness Routing (L87)

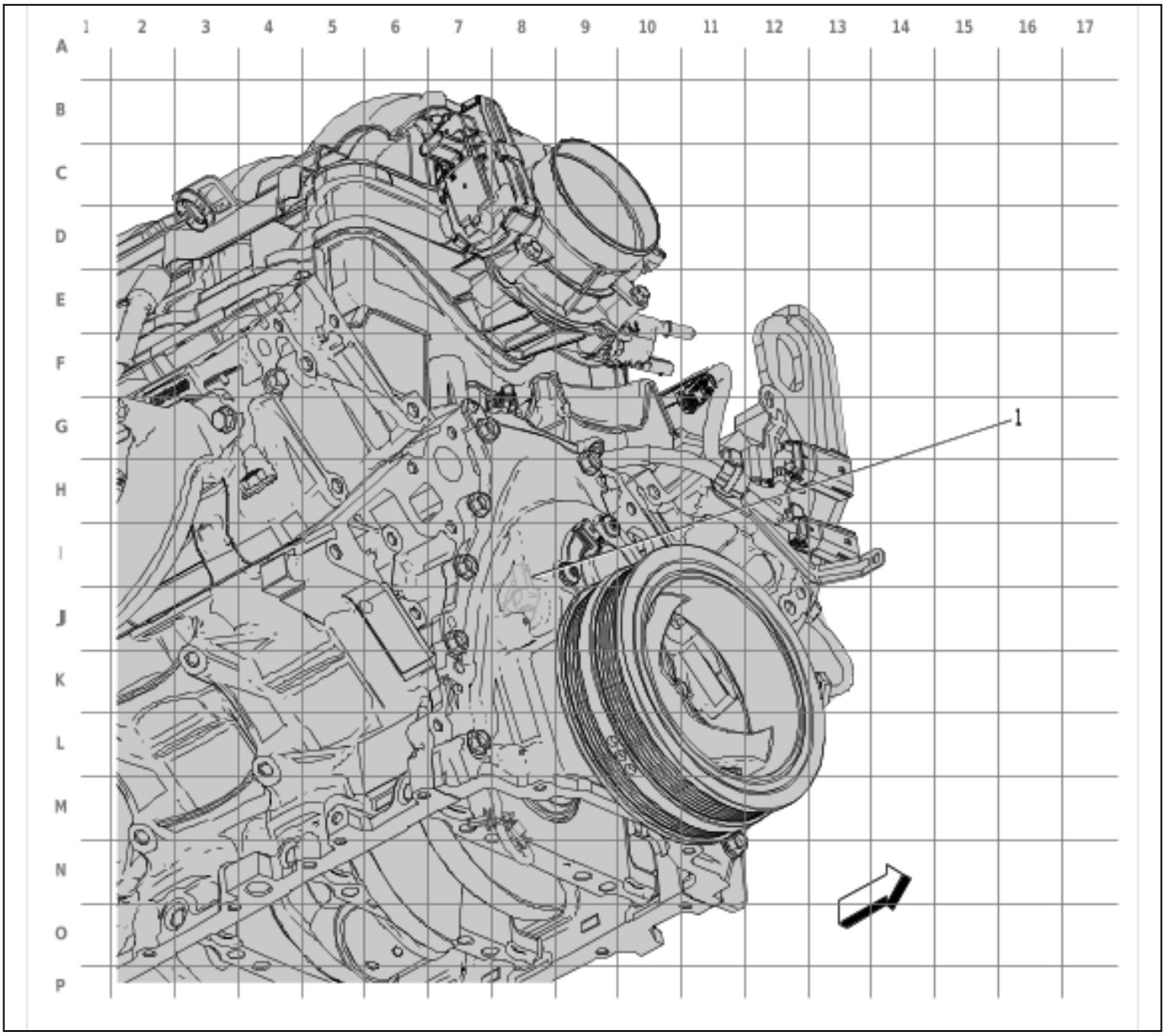

6666128

Items
(1) X129 Camshaft Position Sensor Wire to Oil Pump Flow Control Solenoid Valve Harness

Valve Rocker Arm Oil Control Valve Extension Harness Routing (L84 / L87)

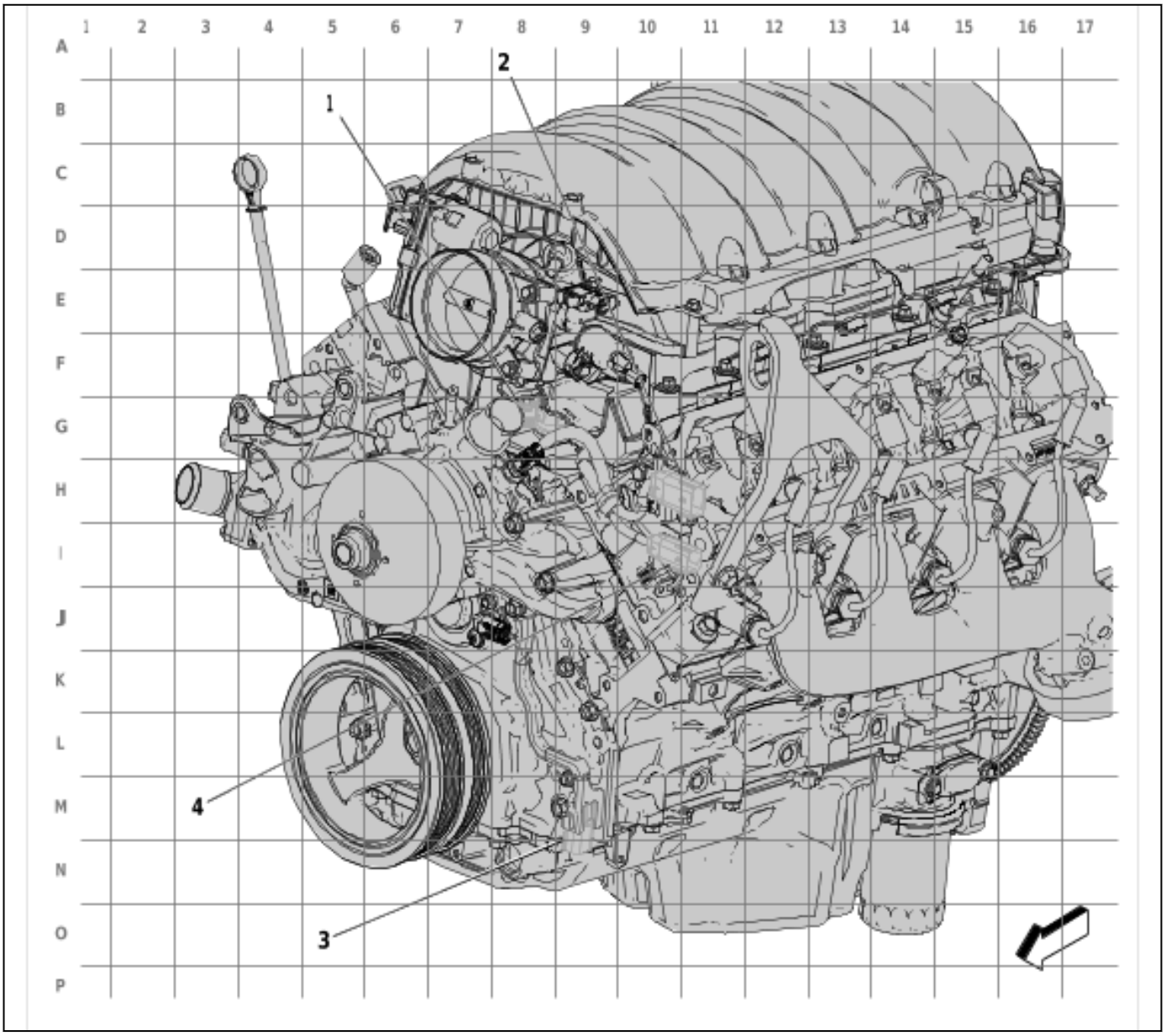

6666129

Items
(1) X963 Valve Rocker Arm Oil Control Valve Extension Harness to Valve Rocker Arm Oil Control Valve Harness (L84 / L87)
(2) X962 Engine Wiring Harness to Valve Rocker Arm Oil Control Valve Extension Harness (L84 / L87)
(3) X128C Engine Wiring Harness to Valve Rocker Arm Oil Control Valve Extension Harness (L84 / L87)
(4) X961 Engine Wiring Harness to Valve Rocker Arm Oil Control Valve Extension Harness (L84 / L87)

Engine Wiring Harness Routing - Front (L84 / L87)

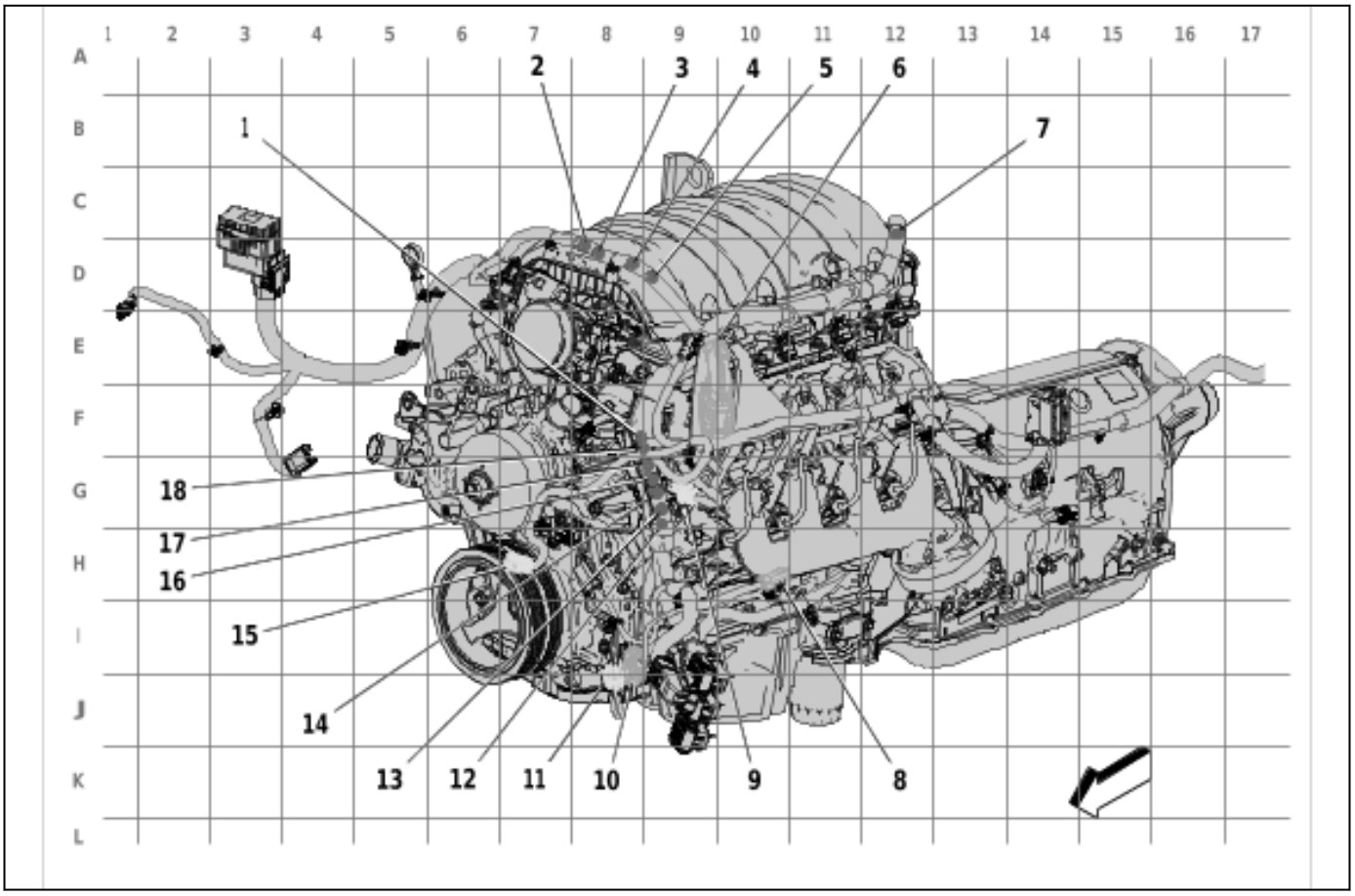

6676704

Items
(1) J156 Engine Wiring Harness (L84 / L87)
(2) J161 Engine Wiring Harness (L84 / L87)
(3) J180 Engine Wiring Harness
(4) J158 Engine Wiring Harness
(5) J159 Engine Wiring Harness
(6) X125 Engine Wiring Harness to Body Wiring Harness
(7) J164 Engine Wiring Harness (L84 / L87)
(8) X415 Transfer Case Selector Shift Control Switch Wiring Harness Extension Harness to Engine Wiring Harness (NP0 / NQH)
(9) X961 Engine Wiring Harness to Valve Rocker Arm Oil Control Valve Extension Harness (L84 / L87)
(10) X403 Engine Wiring Harness to Chassis Wiring Harness
(11) X128C Engine Wiring Harness to Valve Rocker Arm Oil Control Valve Extension Harness (L84 / L87)
(12) J101 Engine Wiring Harness
(13) J152 Engine Wiring Harness (L84 / L87)
(14) J151 Engine Wiring Harness
(15) X604A Engine Harness to Active Grille Air Shutter Harness
(16) J154 Engine Wiring Harness

Items
(17) J181 Engine Wiring Harness
(18) J155 Engine Wiring Harness (L84 / L87)

Engine Wiring Harness Routing - Left Rear (L84 / L87)

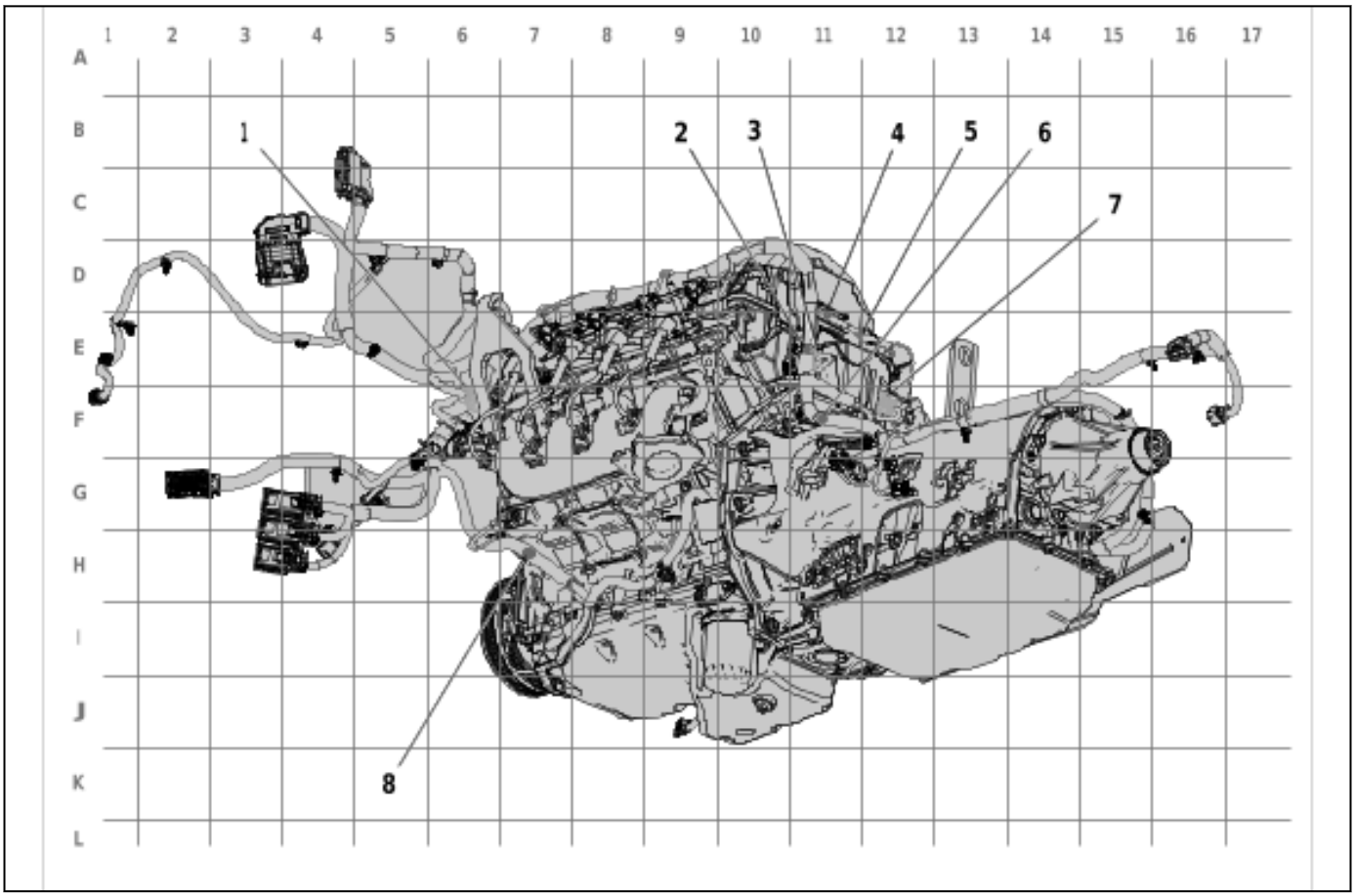

6676703

Items
(1) X962 Engine Wiring Harness to Valve Rocker Arm Oil Control Valve Extension Harness (L84 / L87)
(2) J166 Engine Wiring Harness (L84 / L87)
(3) X160 Engine Wiring Harness to Fuel Injector Wiring Harness - Left
(4) J167 Engine Wiring Harness (L84 / L87)
(5) J165 Engine Wiring Harness (L84 / L87)
(6) J168 Engine Wiring Harness
(7) X161 Engine Wiring Harness to Fuel Injector Wiring Harness - Right (L84 / L87)
(8) J150 Engine Wiring Harness

Fuel Injector Wiring Harness Routing (LZ0)

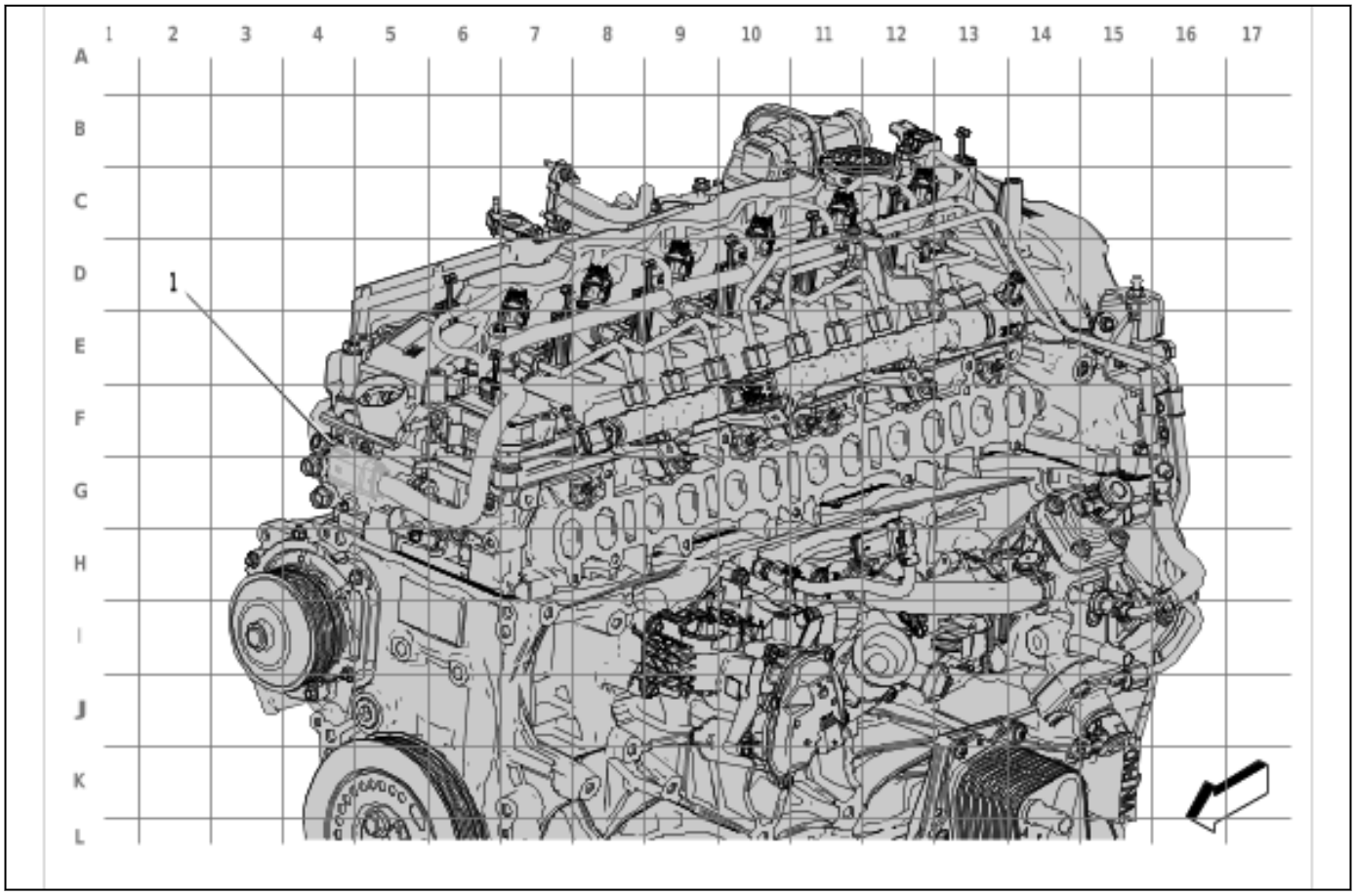

6666130

Items
(1) X160 Engine Wiring Harness to Fuel Injector Wiring Harness - Left

Diesel Glow Plug Wiring Harness Routing (LZ0)

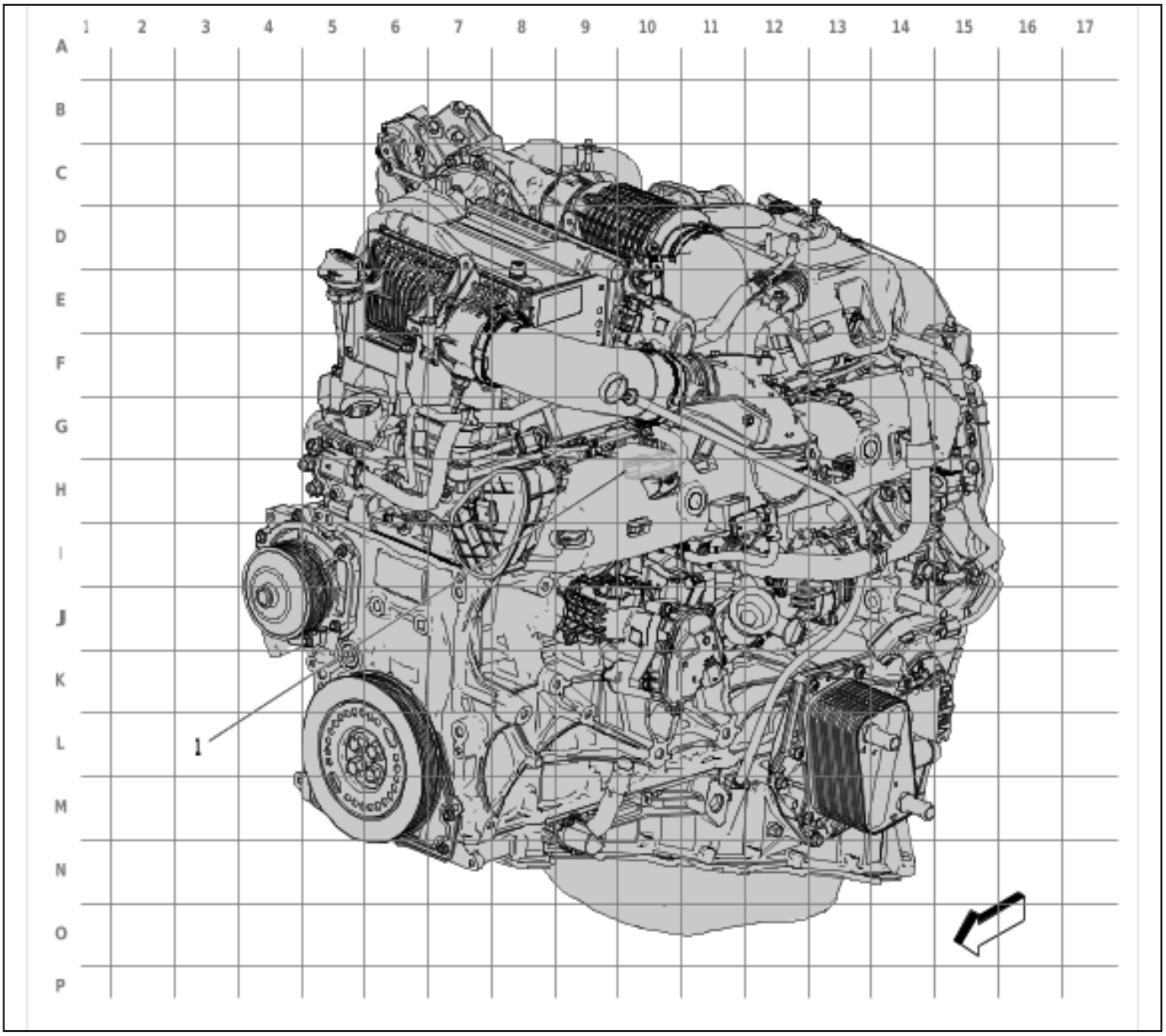

6666131

Items
(1) X163 Engine Wiring Harness to Diesel Glow Plug Wiring Harness (LZ0)

Oil Pump Flow Control Solenoid Valve Harness Routing (LZ0)

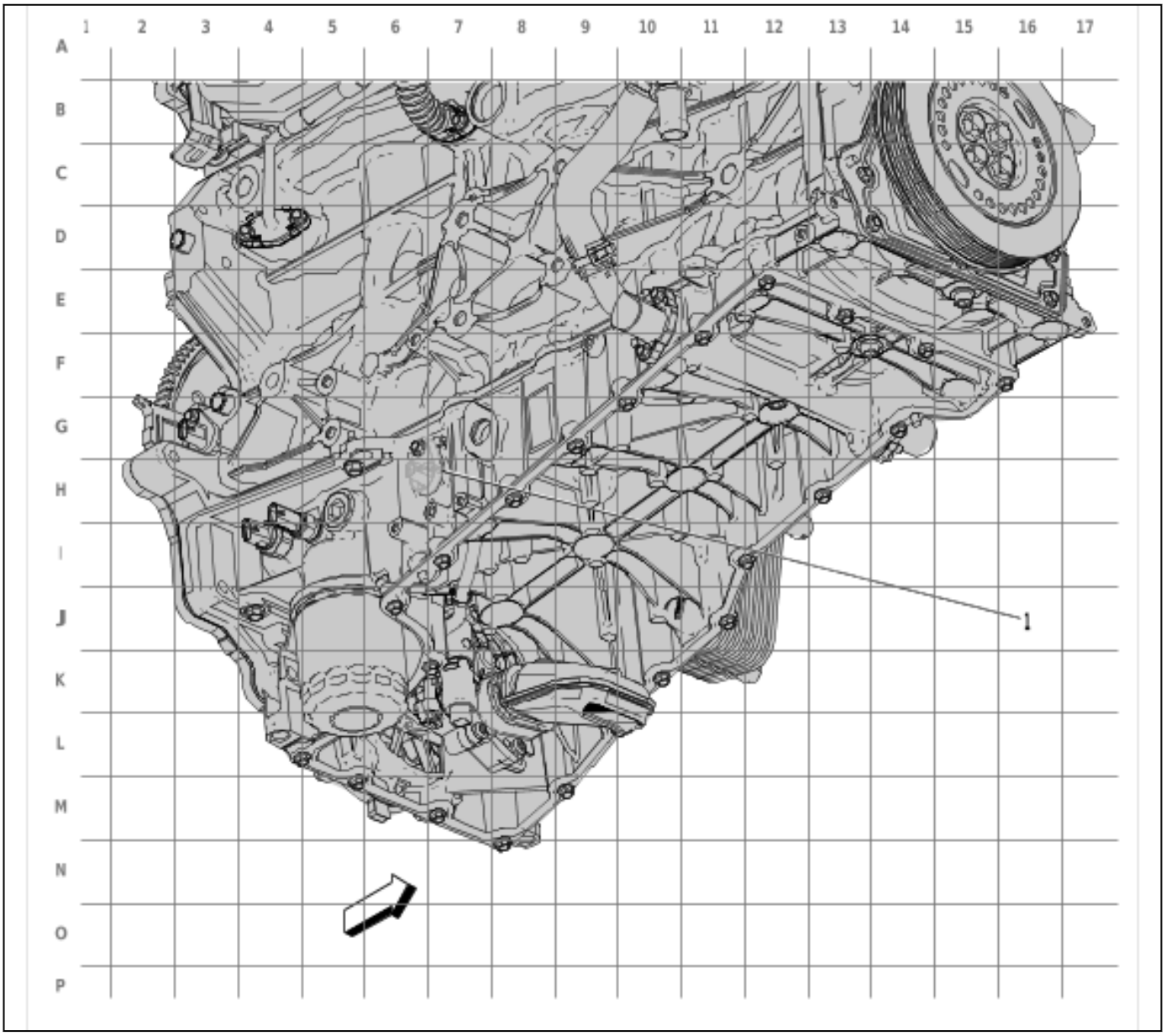

6666259

Items
(1) X129 Camshaft Position Sensor Wire to Oil Pump Flow Control Solenoid Valve Harness

Engine Wiring Harness Routing - Front (LZ0)

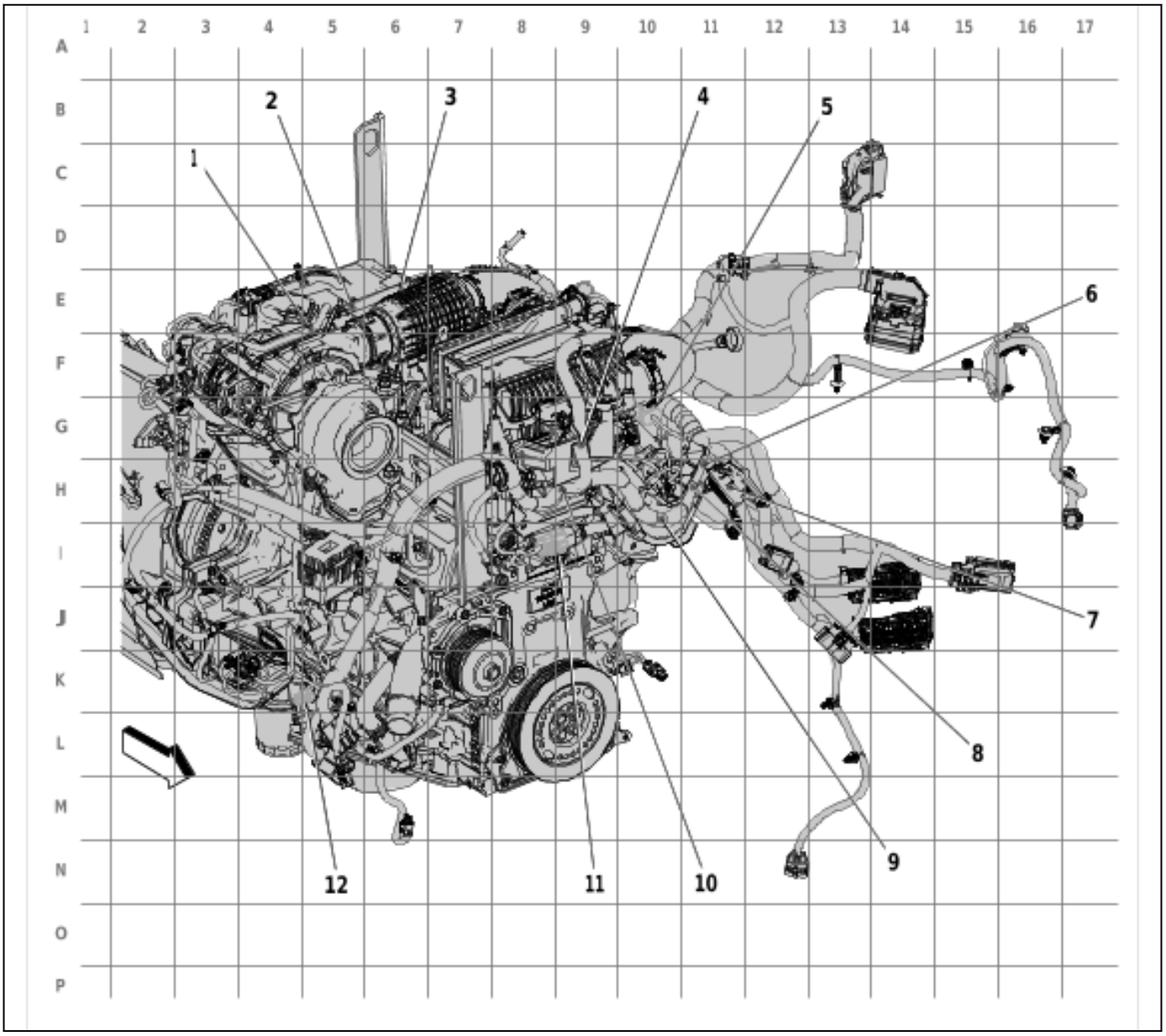

6677058

Items
(1) J183 Engine Wiring Harness
(2) J172 Engine Wiring Harness (LZ0)
(3) J151 Engine Wiring Harness
(4) J186 Engine Wiring Harness (LZ0)
(5) X163 Engine Wiring Harness to Diesel Glow Plug Wiring Harness (LZ0)
(6) J168 Engine Wiring Harness
(7) J101 Engine Wiring Harness
(8) J158 Engine Wiring Harness
(9) J100 Engine Wiring Harness (LZ0)
(10) J181 Engine Wiring Harness

Items
(11) X160 Engine Wiring Harness to Fuel Injector Wiring Harness - Left
(12) X129 Camshaft Position Sensor Wire to Oil Pump Flow Control Solenoid Valve Harness

Engine Wiring Harness Routing - Left Rear (LZ0)

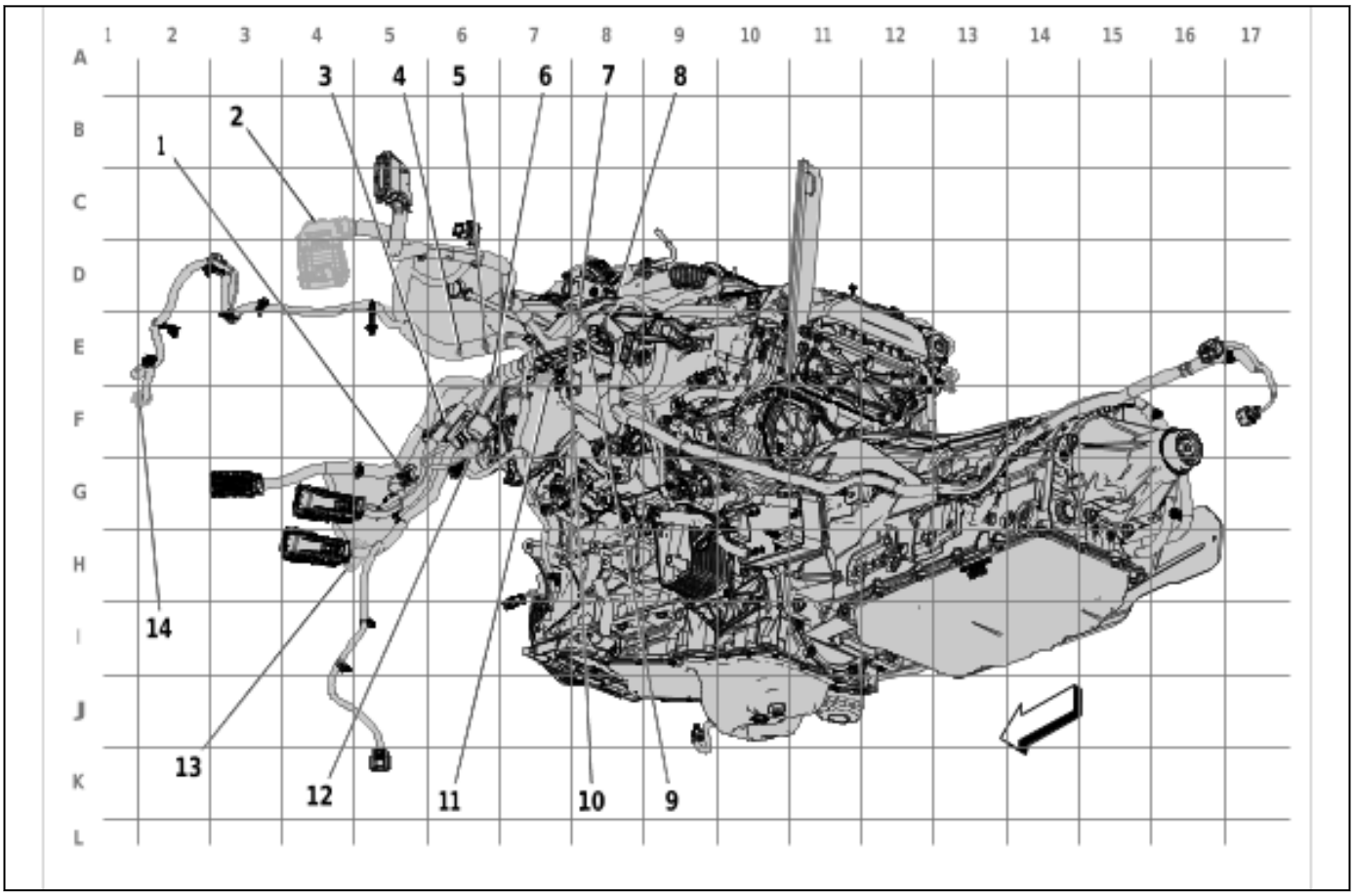

6677059

Items
(1) J159 Engine Wiring Harness
(2) X125 Engine Wiring Harness to Body Wiring Harness
(3) J154 Engine Wiring Harness
(4) J130 Engine Wiring Harness (LZ0)
(5) J131 Engine Wiring Harness (LZ0)
(6) J149 Engine Wiring Harness (LZ0)
(7) J170 Engine Wiring Harness (LZ0)
(8) J180 Engine Wiring Harness
(9) J169 Engine Wiring Harness (LZ0)
(10) J150 Engine Wiring Harness
(11) X944 Engine Wiring Harness to Engine Coolant Temperature Sensor Harness (LZ0)
(12) X415 Transfer Case Selector Shift Control Switch Wiring Harness Extension Harness to Engine Wiring Harness (NP0 / NQH)

Items
(13) X403 Engine Wiring Harness to Chassis Wiring Harness
(14) X604A Engine Harness to Active Grille Air Shutter Harness

Instrument Panel Wiring Harness Routing - Left

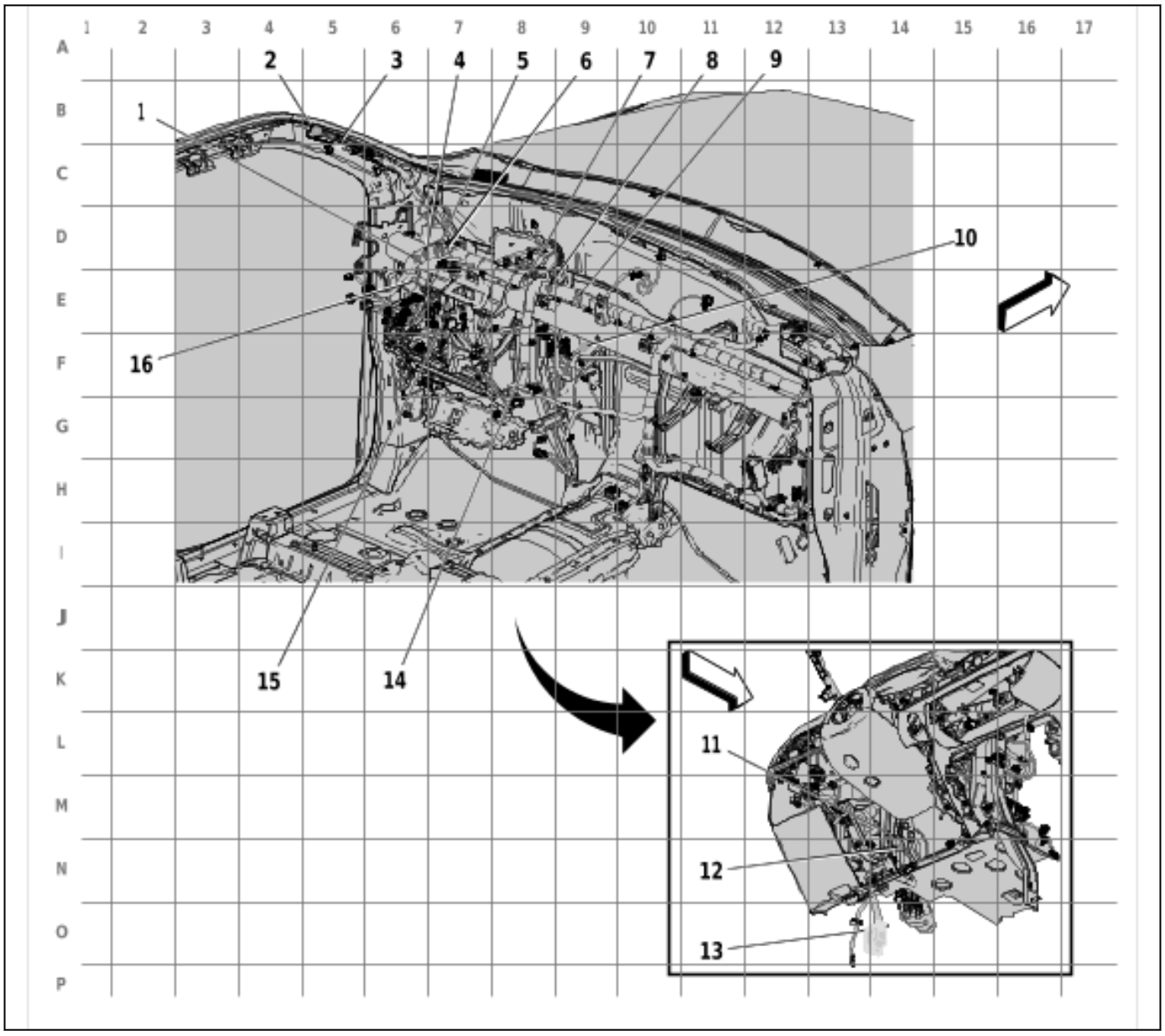

6676705

Items
(1) J235 Instrument Panel Wiring Harness (UQF)
(2) X396 Instrument Panel Wiring Harness to Antenna Wiring Harness
(3) X397 Instrument Panel Wiring Harness to Antenna Wiring Harness
(4) J217 Instrument Panel Wiring Harness
(5) J237 Instrument Panel Wiring Harness
(6) J238 Instrument Panel Wiring Harness (UQF)

Items
(7) J267 Instrument Panel Wiring Harness
(8) J246 Instrument Panel Wiring Harness
(9) J242 Instrument Panel Wiring Harness
(10) X250 Instrument Panel Wiring Harness to Heater Wiring Harness
(11) J240 Instrument Panel Wiring Harness
(12) W24 Blunt Cut - Trailer Brakes Provision (- JL1)
(13) X211 Instrument Panel Wiring Harness to Body Wiring Harness
(14) J241 Instrument Panel Wiring Harness
(15) J236 Instrument Panel Wiring Harness
(16) J233 Instrument Panel Wiring Harness

Instrument Panel Wiring Harness Routing - Right

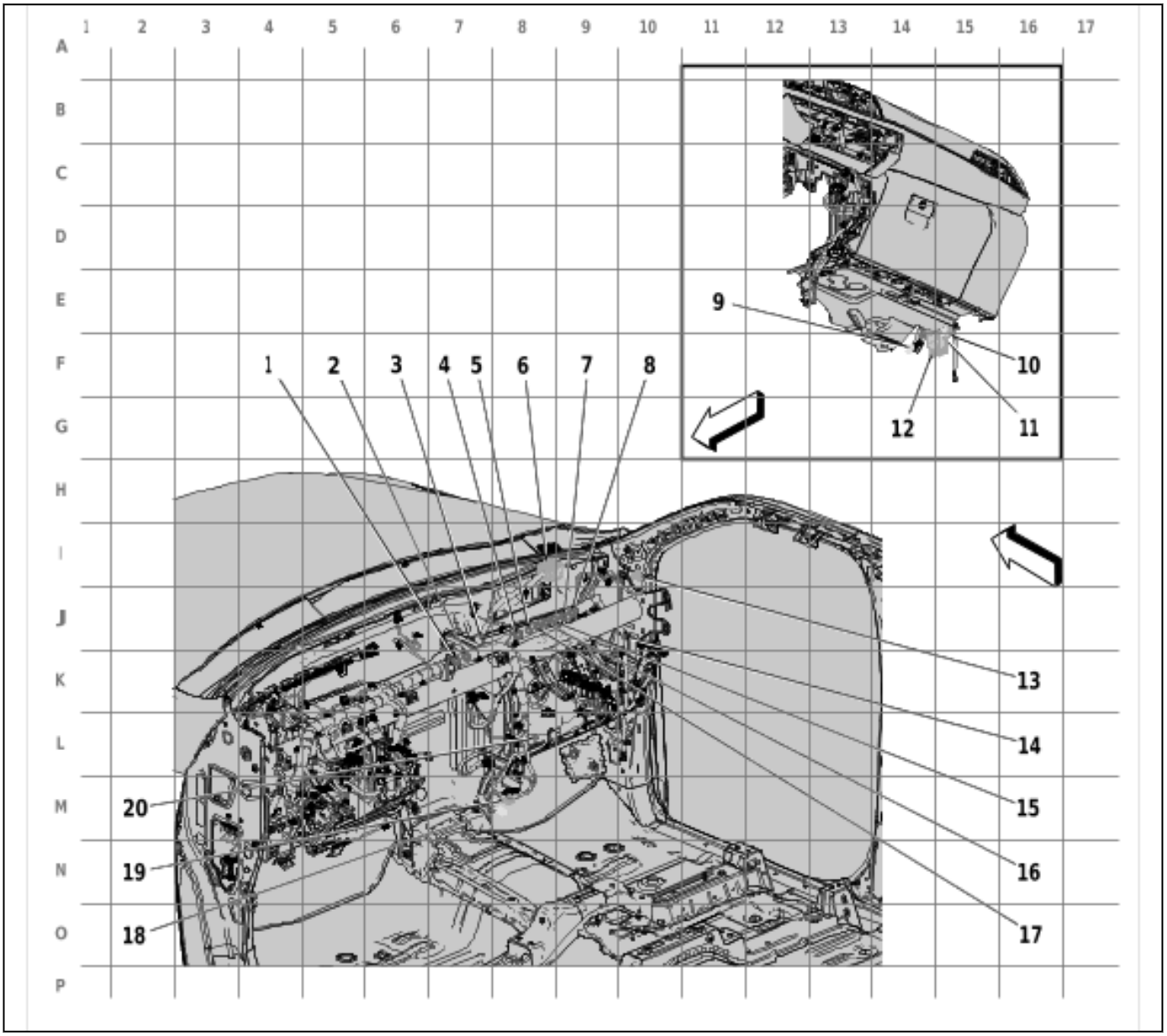

6676706

Items
(1) J249 Instrument Panel Wiring Harness
(2) J248 Instrument Panel Wiring Harness
(3) J243 Instrument Panel Wiring Harness
(4) J244 Instrument Panel Wiring Harness
(5) J250 Instrument Panel Wiring Harness
(6) X370A Headlining Trim Panel Harness to Instrument Panel Wiring Harness
(7) J252 Instrument Panel Wiring Harness (UQF)
(8) J253 Instrument Panel Wiring Harness
(9) X217 Instrument Panel Wiring Harness to Body Wiring Harness
(10) X216 Instrument Panel Wiring Harness to Body Wiring Harness
(11) X214 Instrument Panel Wiring Harness to Body Wiring Harness
(12) X210 Instrument Panel Wiring Harness to Body Wiring Harness
(13) X371 Headlining Trim Panel Harness to Instrument Panel Wiring Harness
(14) J254 Instrument Panel Wiring Harness
(15) J213 Instrument Panel Wiring Harness
(16) J216 Instrument Panel Wiring Harness
(17) J251 Instrument Panel Wiring Harness (UQF)
(18) X225C Front Floor Console Wiring Harness to Instrument Panel Wiring Harness
(19) X225B Instrument Panel Wiring Harness to Front Floor Console Wiring Harness
(20) J247 Instrument Panel Wiring Harness

Heater Wiring Harness Routing

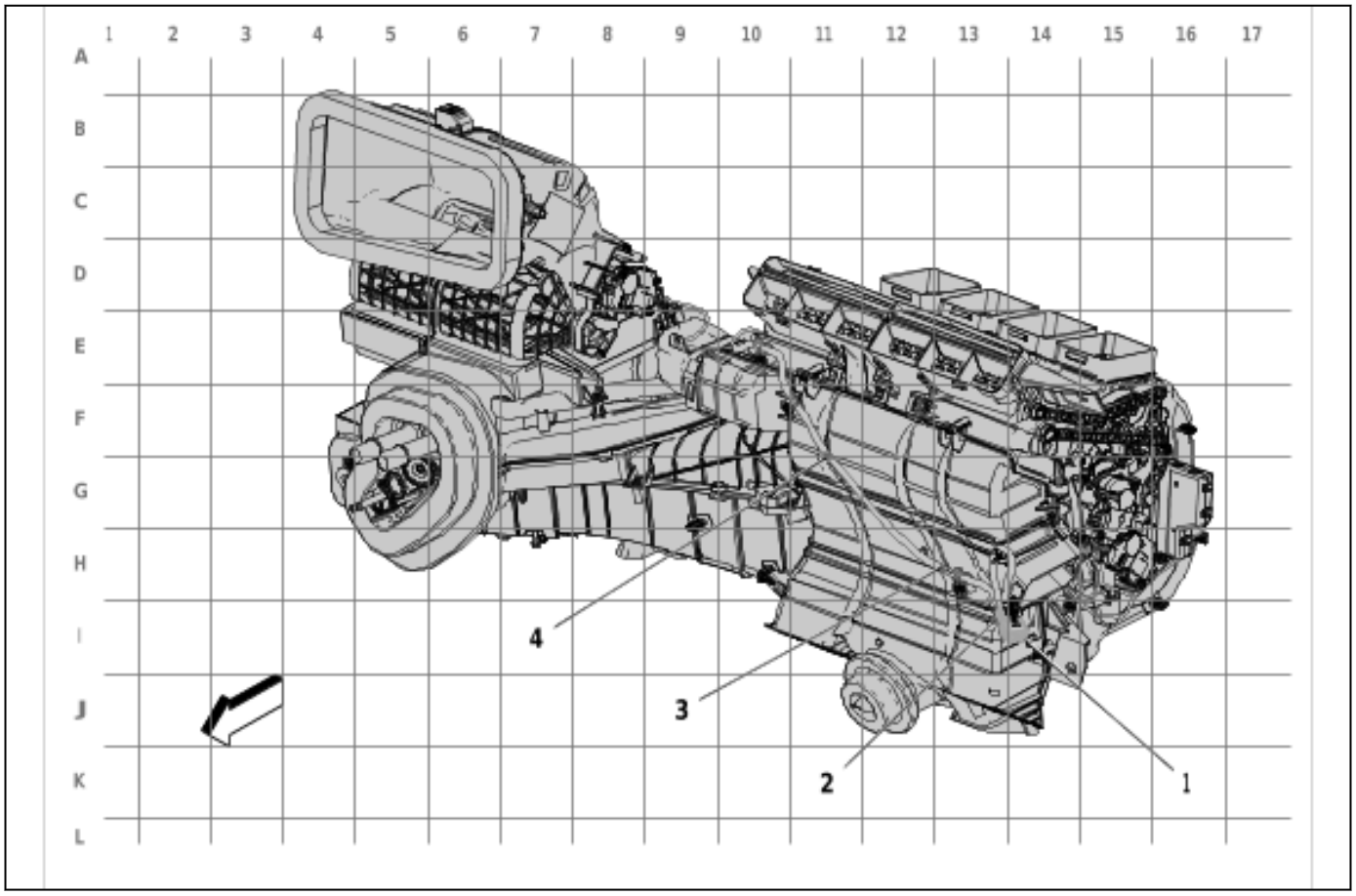

6676707

Items
(1) X250 Instrument Panel Wiring Harness to Heater Wiring Harness
(2) J220 Heater Wiring Harness
(3) J222 Heater Wiring Harness
(4) J221 Heater Wiring Harness

Body Wiring Harness - Left Front of Passenger Compartment Routing

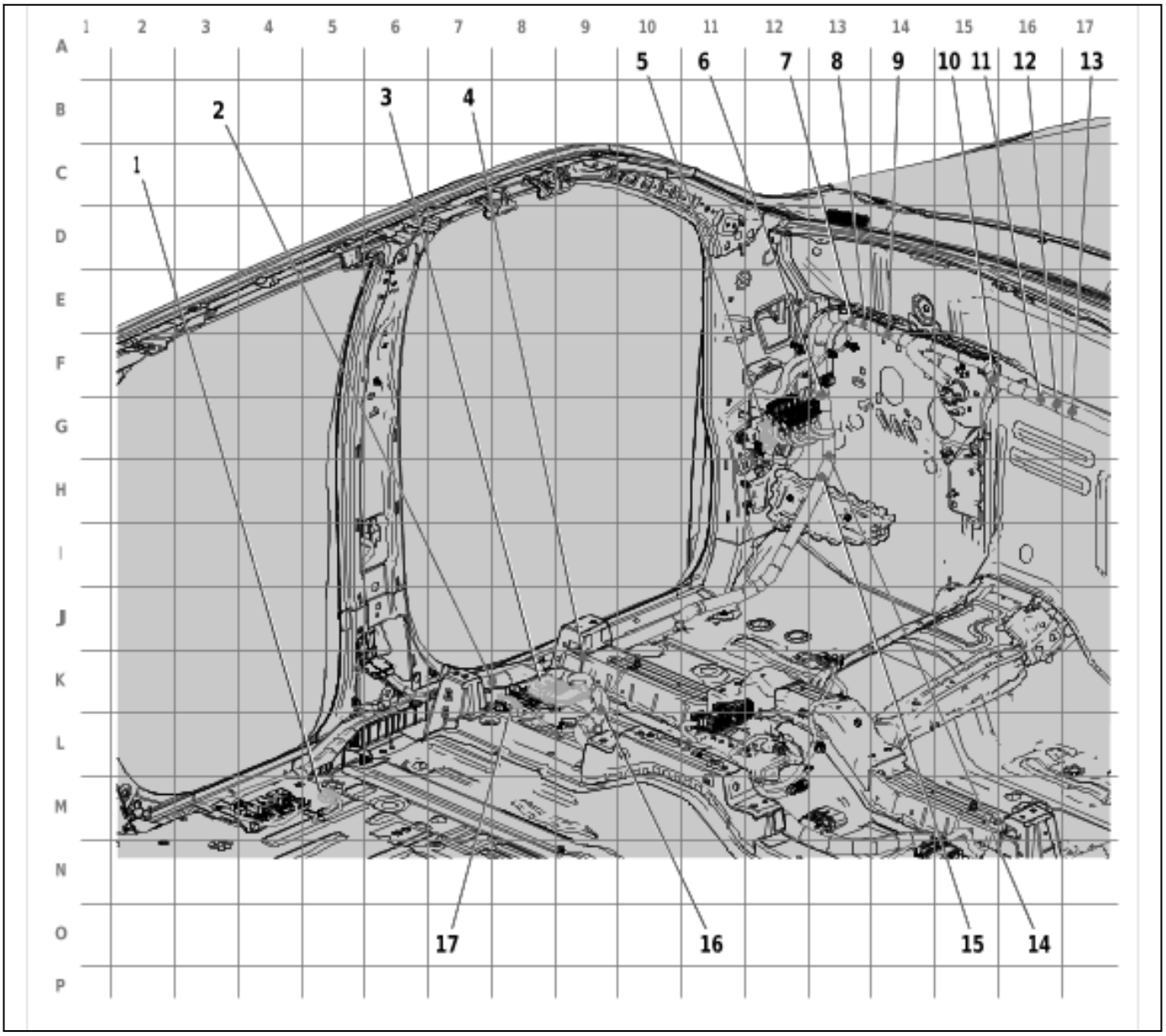

6685751

Items
(1) X340A Body Wiring Harness to 2nd Row Seat Wiring Harness - Left Cushion
(2) J329 Body Wiring Harness
(3) X328 Front Seat Wiring Harness - Driver to Body Wiring Harness
(4) J210 Body Wiring Harness
(5) X211 Instrument Panel Wiring Harness to Body Wiring Harness
(6) J211 Body Wiring Harness
(7) J209 Body Wiring Harness
(8) J208 Body Wiring Harness
(9) J207 Body Wiring Harness
(10) J201 Body Wiring Harness

Items
(11) J203 Body Wiring Harness
(12) J204 Body Wiring Harness
(13) J205 Body Wiring Harness
(14) J212 Body Wiring Harness
(15) J202 Body Wiring Harness
(16) J331 Body Wiring Harness
(17) X329 Body Wiring Harness to Front Seat Wiring Harness - Driver (UW9)

Body Wiring Harness - Right Front of Passenger Compartment Routing

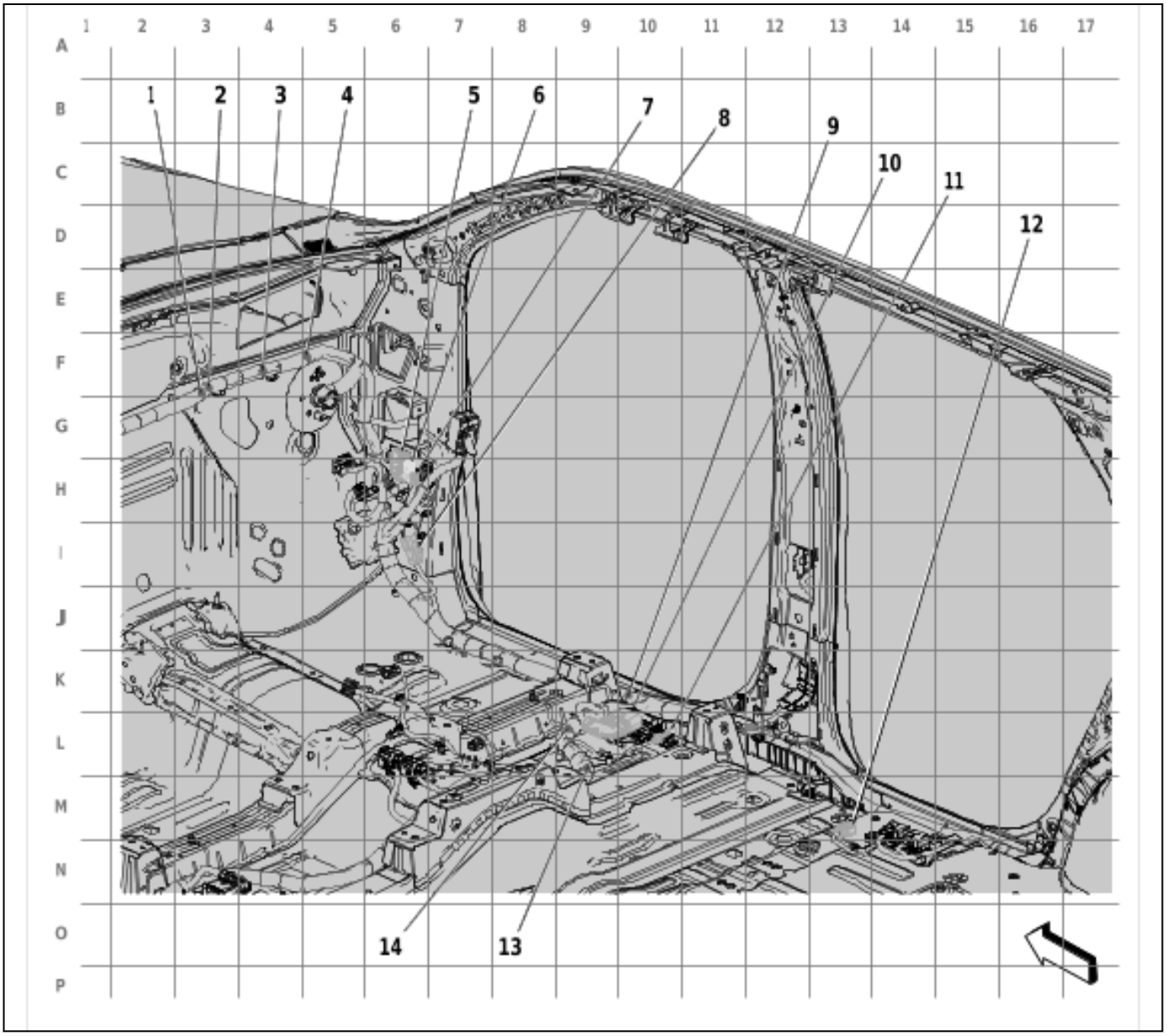

6685750

Items
(1) J265 Body Wiring Harness
(2) J268 Body Wiring Harness
(3) J263 Body Wiring Harness

Items
(4) J215 Body Wiring Harness
(5) X210 Instrument Panel Wiring Harness to Body Wiring Harness
(6) X214 Instrument Panel Wiring Harness to Body Wiring Harness
(7) X216 Instrument Panel Wiring Harness to Body Wiring Harness
(8) X251L Heater Wiring Harness to Body Wiring Harness (C3A)
(9) J369 Body Wiring Harness
(10) X333 Front Seat Wiring Harness - Passenger to Body Wiring Harness
(11) X344L Body Wiring Harness to Front Seat Wiring Harness - Passenger (UW9)
(12) X344A Body Wiring Harness to 2nd Row Seat Wiring Harness - Right Cushion
(13) J361 Body Wiring Harness
(14) J390 Body Wiring Harness

Body Wiring Harness - Center of Passenger Compartment Routing

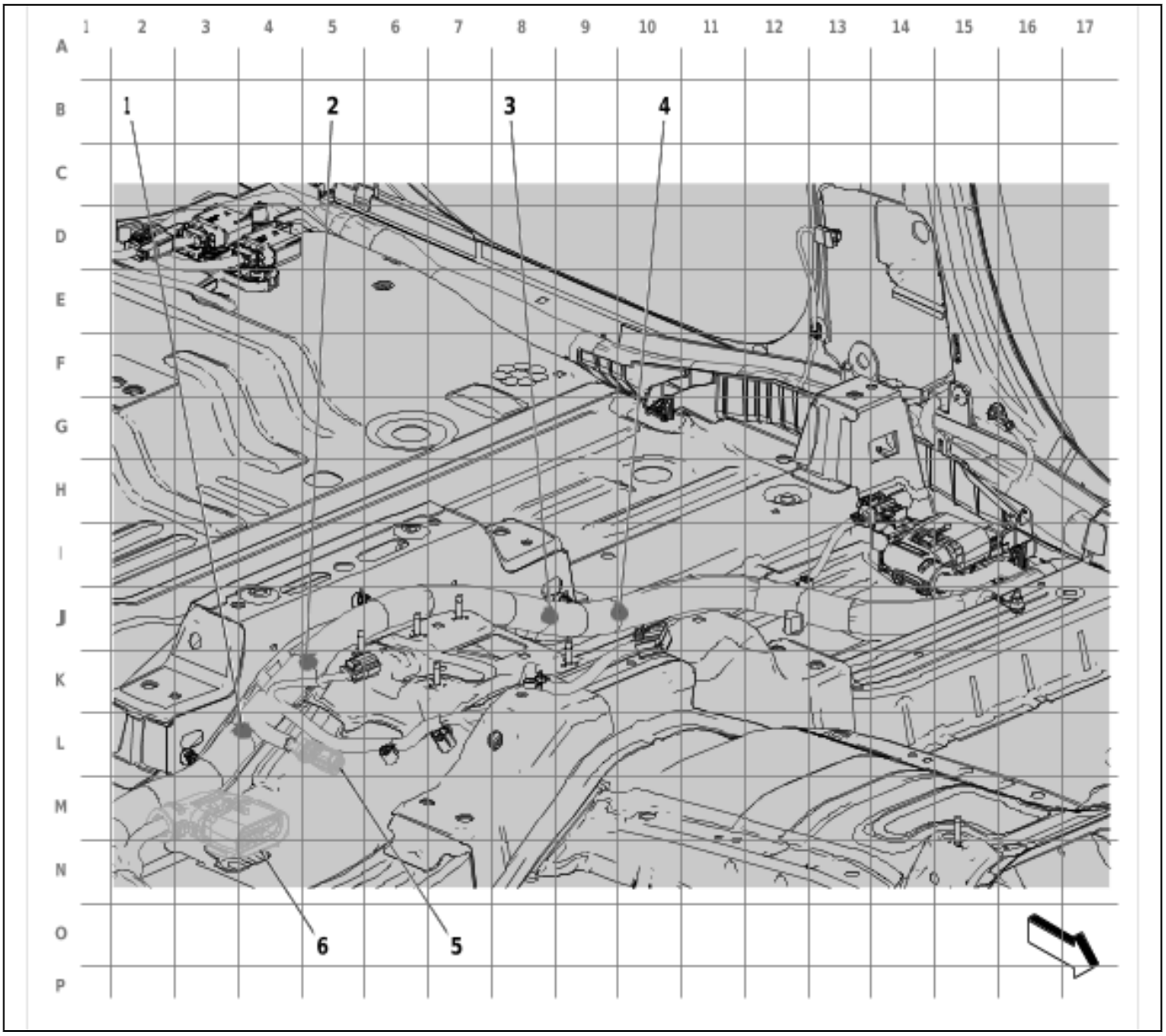

6685752

Items
(1) J358 Body Wiring Harness
(2) J357 Body Wiring Harness
(3) J333 Body Wiring Harness
(4) J334 Body Wiring Harness
(5) X226 Front Floor Console Wiring Harness to Body Wiring Harness (UW9)
(6) X225A Front Floor Console Wiring Harness to Body Wiring Harness

Front Seat Wiring Harness - Center Routing (AZ3)

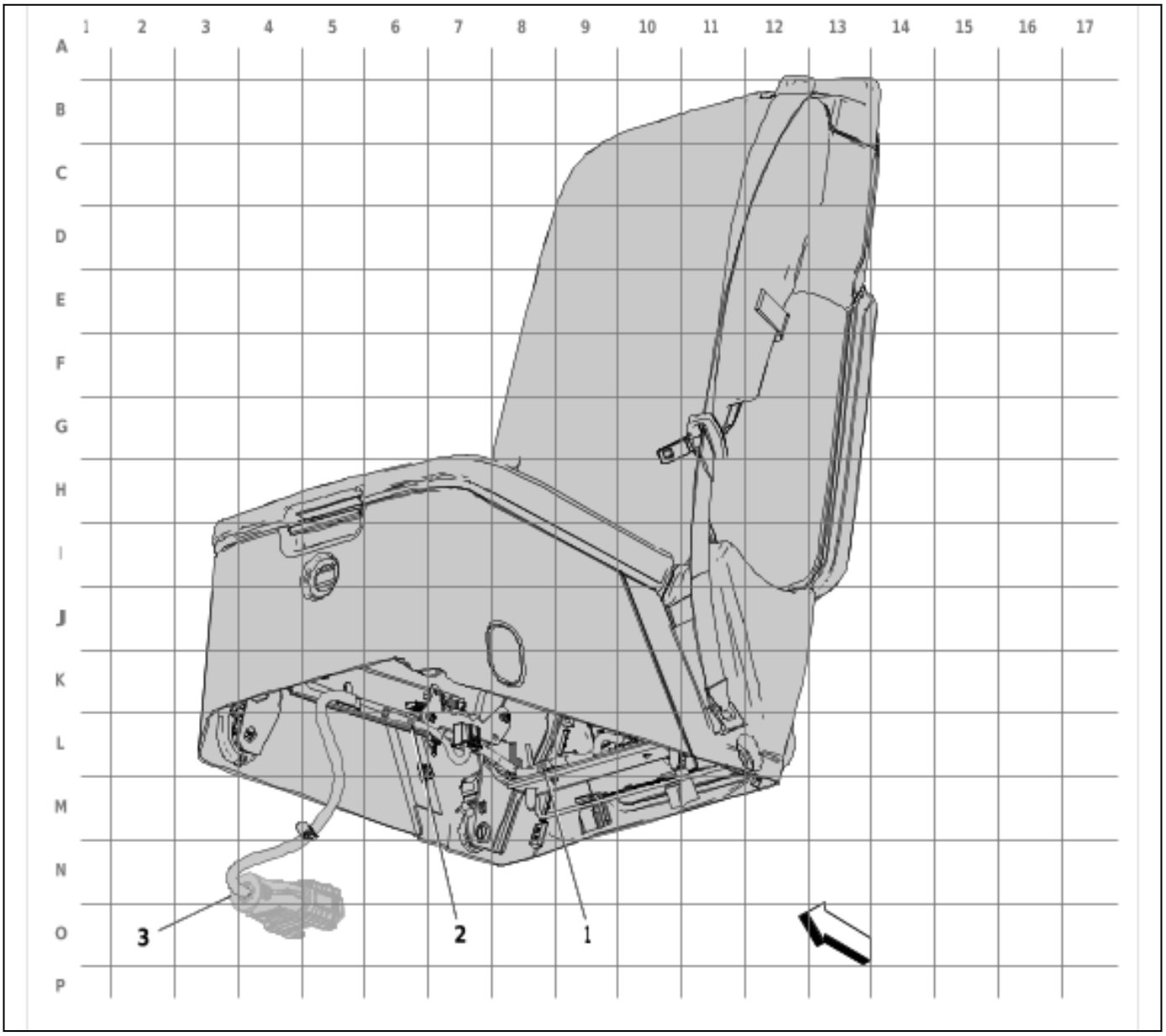

6691850

Items
(2) J300 Front Floor Console Wiring Harness
(3) X225A Front Floor Console Wiring Harness to Body Wiring Harness

Front Floor Console Wiring Harness Routing (D07)

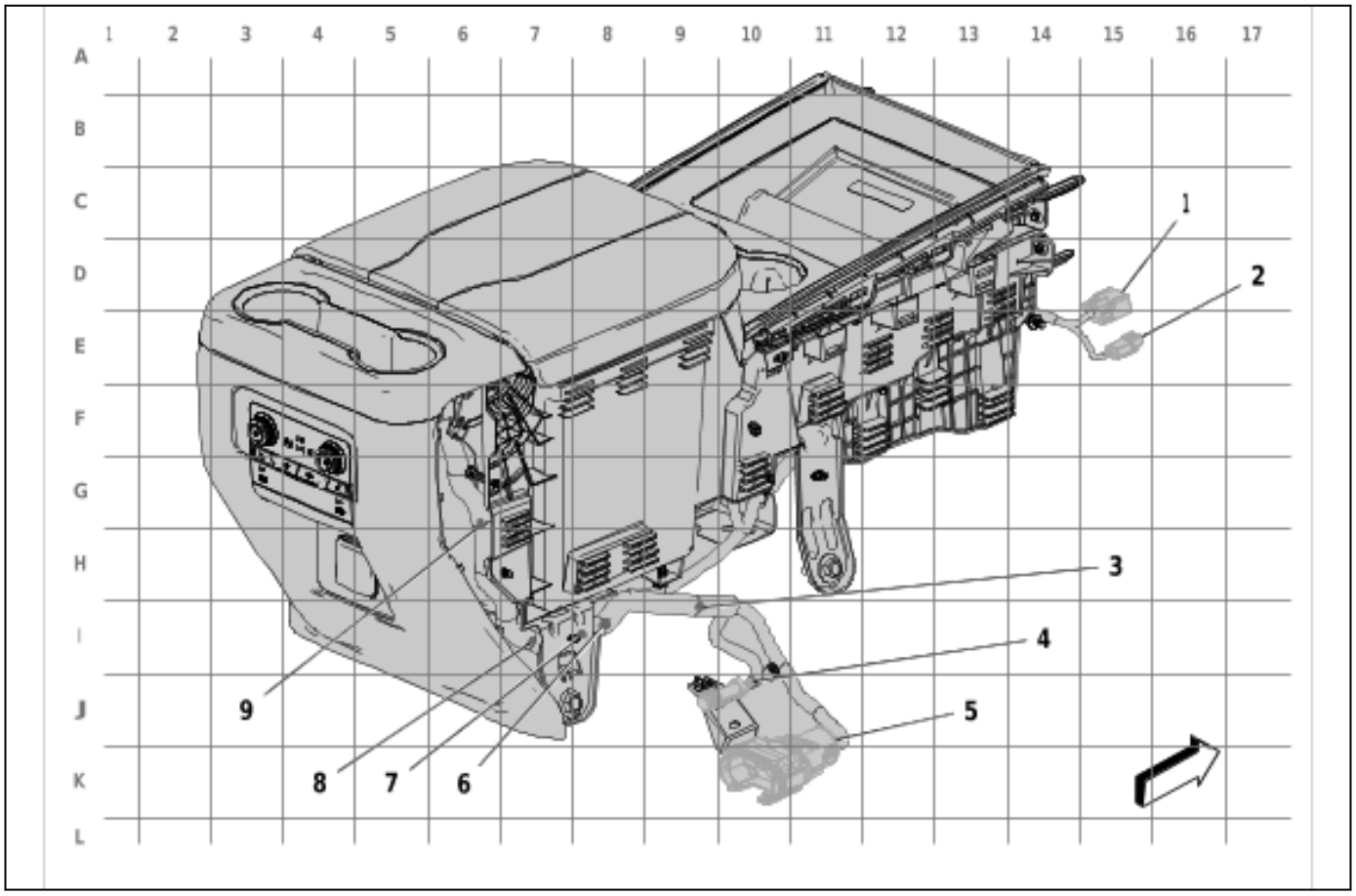

6686793

Items
(1) X225B Instrument Panel Wiring Harness to Front Floor Console Wiring Harness
(2) X225C Front Floor Console Wiring Harness to Instrument Panel Wiring Harness
(3) J386 Front Floor Console Wiring Harness (BOR / BOY)
(4) X226 Front Floor Console Wiring Harness to Body Wiring Harness (UW9)
(5) X225A Front Floor Console Wiring Harness to Body Wiring Harness
(6) J300 Front Floor Console Wiring Harness
(7) J302 Front Floor Console Wiring Harness (D07 / DCH / DCK)
(8) J303 Front Floor Console Wiring Harness (D07 / DCK)
(9) J301 Front Floor Console Wiring Harness

Front Floor Console Wiring Harness Routing (DCH)

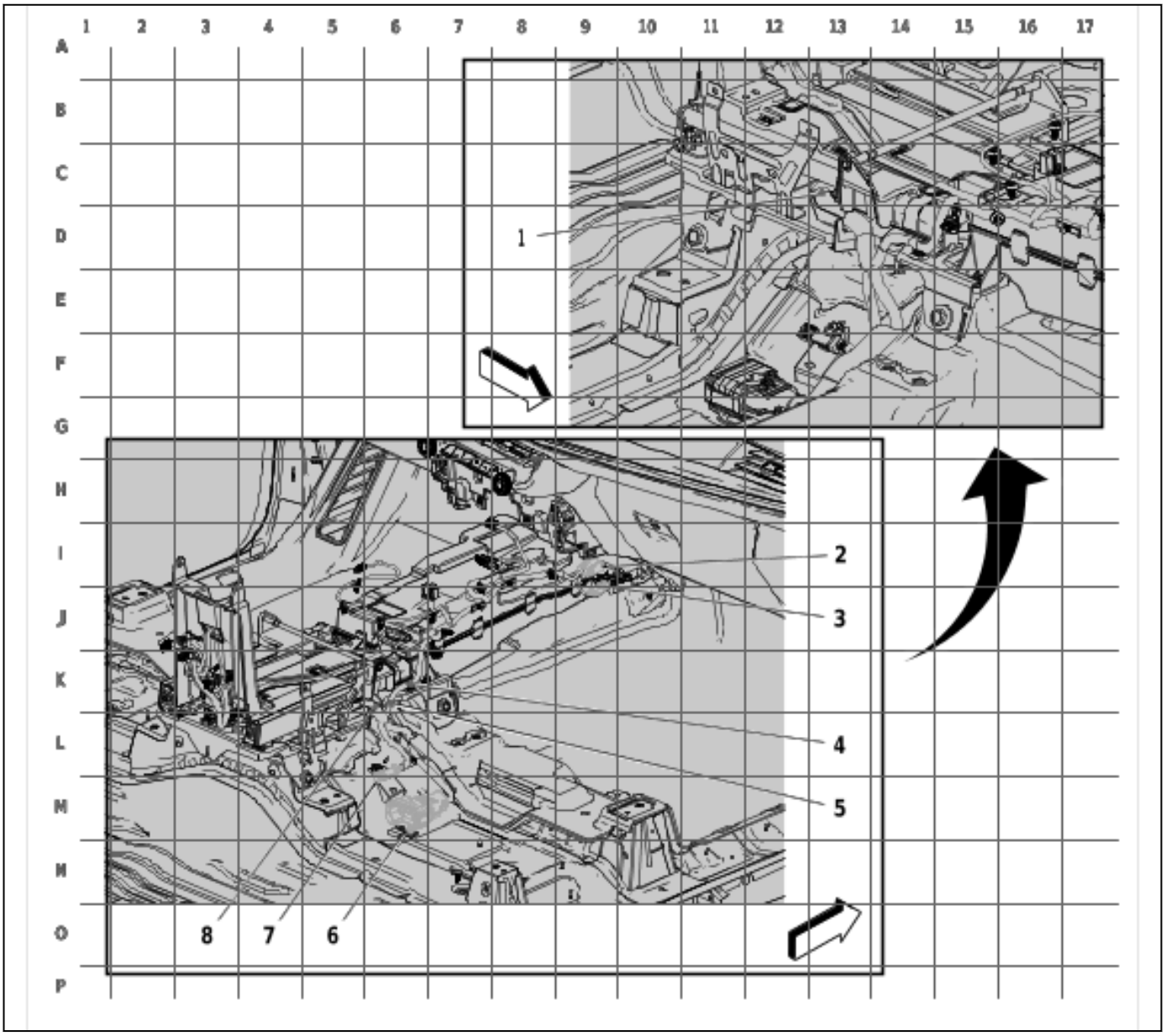

6686794

Items
(1) J301 Front Floor Console Wiring Harness
(2) X225B Instrument Panel Wiring Harness to Front Floor Console Wiring Harness
(3) X225C Front Floor Console Wiring Harness to Instrument Panel Wiring Harness
(4) J386 Front Floor Console Wiring Harness (BOR / BOY)
(5) J300 Front Floor Console Wiring Harness
(6) X225A Front Floor Console Wiring Harness to Body Wiring Harness
(7) X226 Front Floor Console Wiring Harness to Body Wiring Harness (UW9)
(8) J302 Front Floor Console Wiring Harness (D07 / DCH / DCK)

Front Floor Console Wiring Harness Routing (DCK)

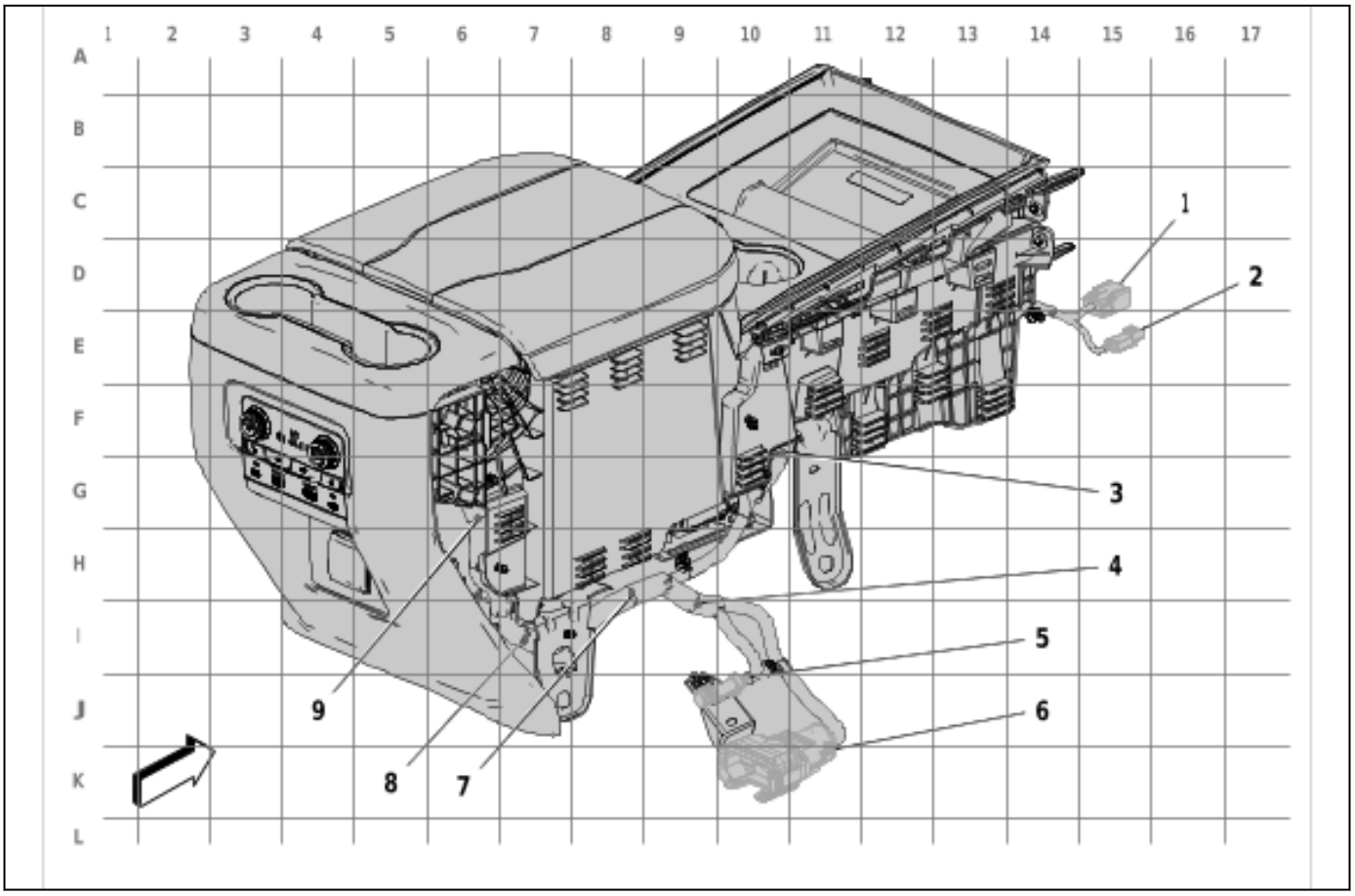

6686795

Items
(1) X225B Instrument Panel Wiring Harness to Front Floor Console Wiring Harness
(2) X225C Front Floor Console Wiring Harness to Instrument Panel Wiring Harness
(3) J386 Front Floor Console Wiring Harness (BOR / BOY)
(4) J302 Front Floor Console Wiring Harness (D07 / DCH / DCK)
(5) X226 Front Floor Console Wiring Harness to Body Wiring Harness (UW9)
(6) X225A Front Floor Console Wiring Harness to Body Wiring Harness
(7) J300 Front Floor Console Wiring Harness
(8) J303 Front Floor Console Wiring Harness (D07 / DCK)
(9) J301 Front Floor Console Wiring Harness

Front Seat Wiring Harness - Driver Routing

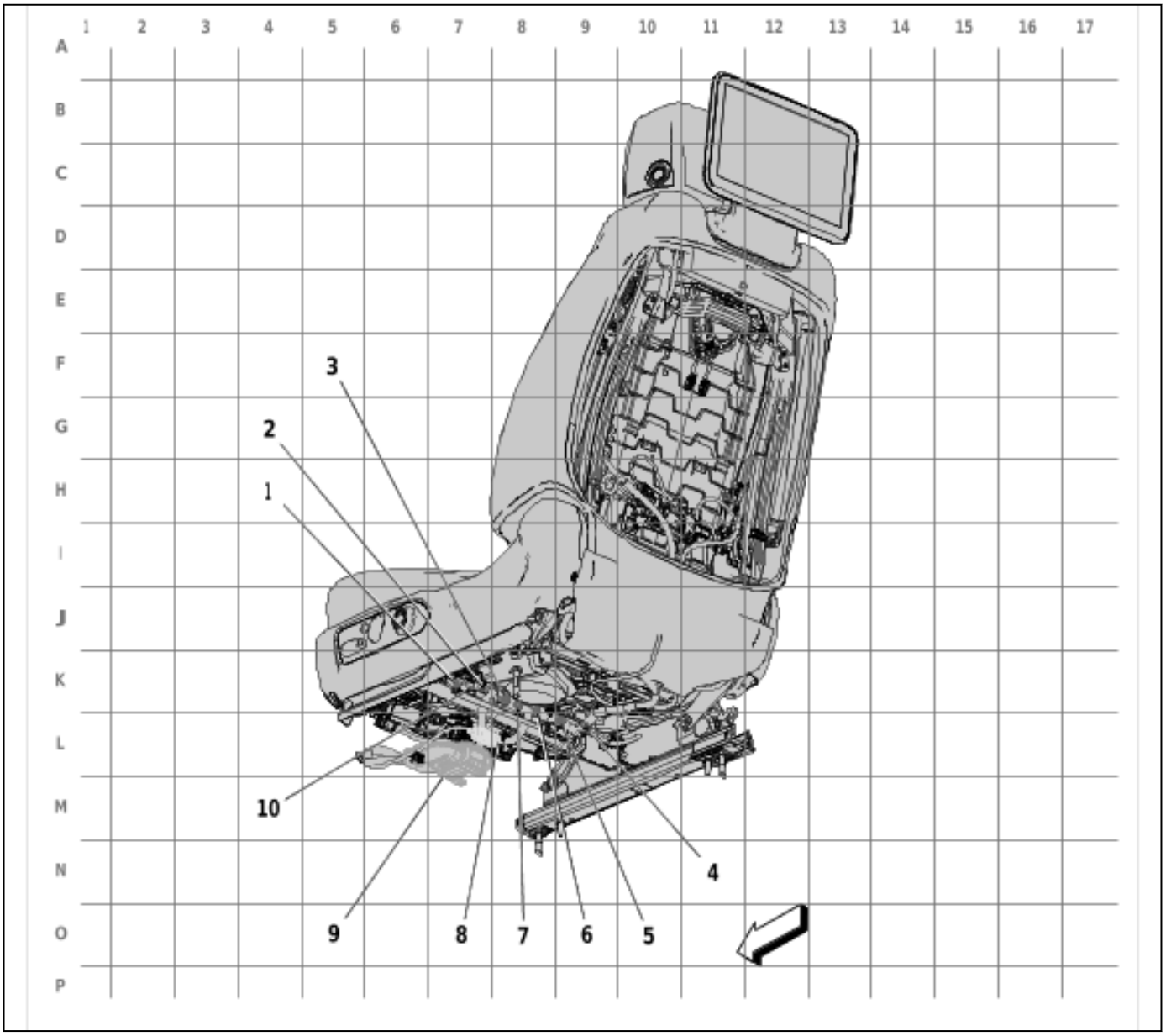

6693380

Items
(1) J317 Front Seat Wiring Harness - Driver
(2) J311 Front Seat Wiring Harness - Driver (AL9)
(3) J326 Front Seat Wiring Harness - Passenger (KA1)
(4) J330 Front Seat Wiring Harness - Driver (KA1)
(5) J316 Front Seat Wiring Harness - Driver (AVK)
(6) J315 Front Seat Wiring Harness - Driver (KQV)
(7) J310 Front Seat Wiring Harness - Driver (A45 / AUN)
(8) X329 Body Wiring Harness to Front Seat Wiring Harness - Driver (UW9)
(9) X328 Front Seat Wiring Harness - Driver to Body Wiring Harness
(10) J319 Front Seat Wiring Harness - Driver (KQV)

Front Seat Wiring Harness - Passenger Routing

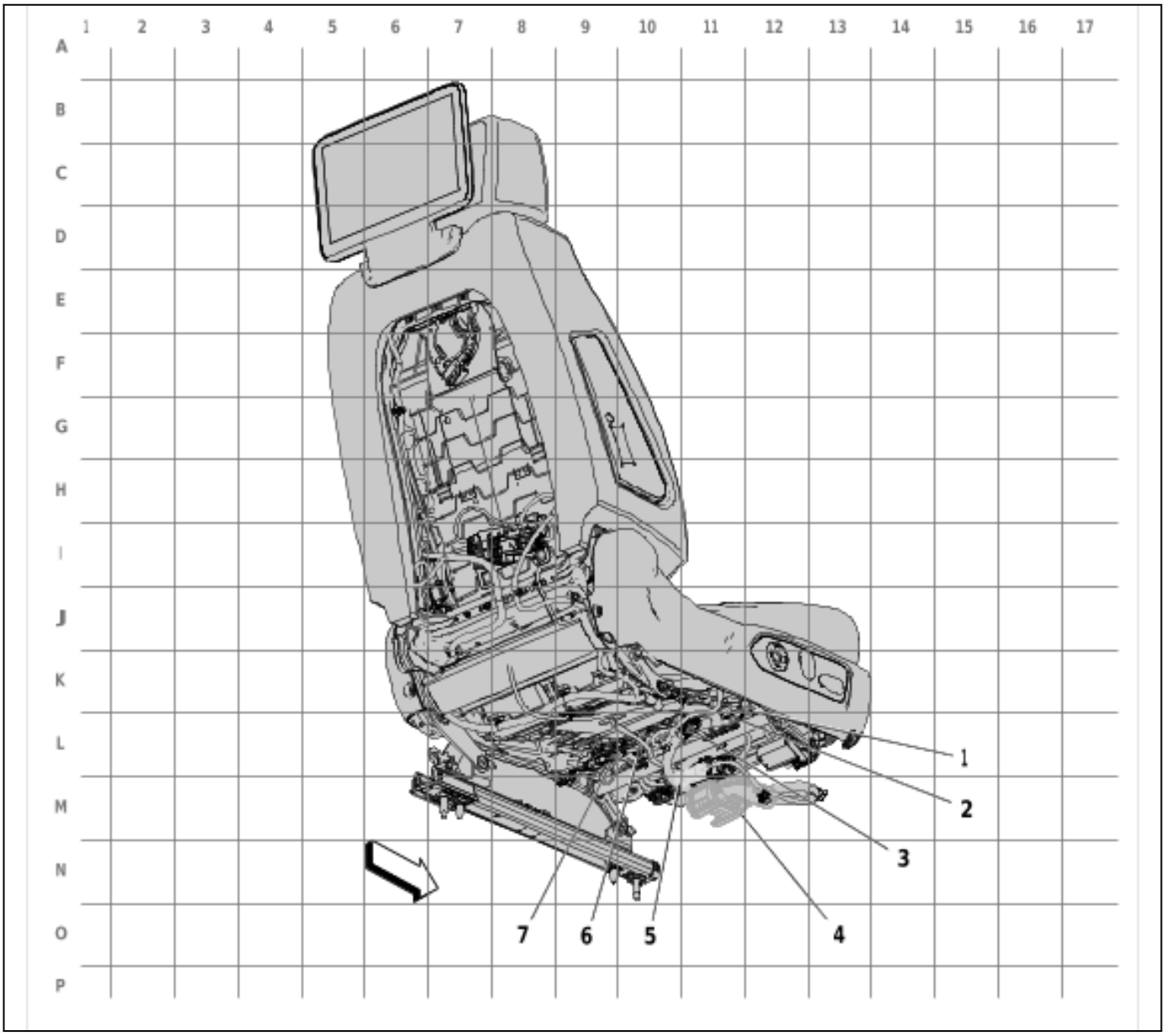

6693381

Items
(1) J321 Front Seat Wiring Harness - Passenger
(2) J313 Front Seat Wiring Harness - Passenger
(3) J324 Front Seat Wiring Harness - Passenger (KA1)
(4) X333 Front Seat Wiring Harness - Passenger to Body Wiring Harness
(5) X344L Body Wiring Harness to Front Seat Wiring Harness - Passenger (UW9)
(6) J332 Front Seat Wiring Harness - Passenger (KQV)
(7) J325 Front Seat Wiring Harness - Passenger (KQV)

2nd Row Seat Wiring Harness Routing (ATN)

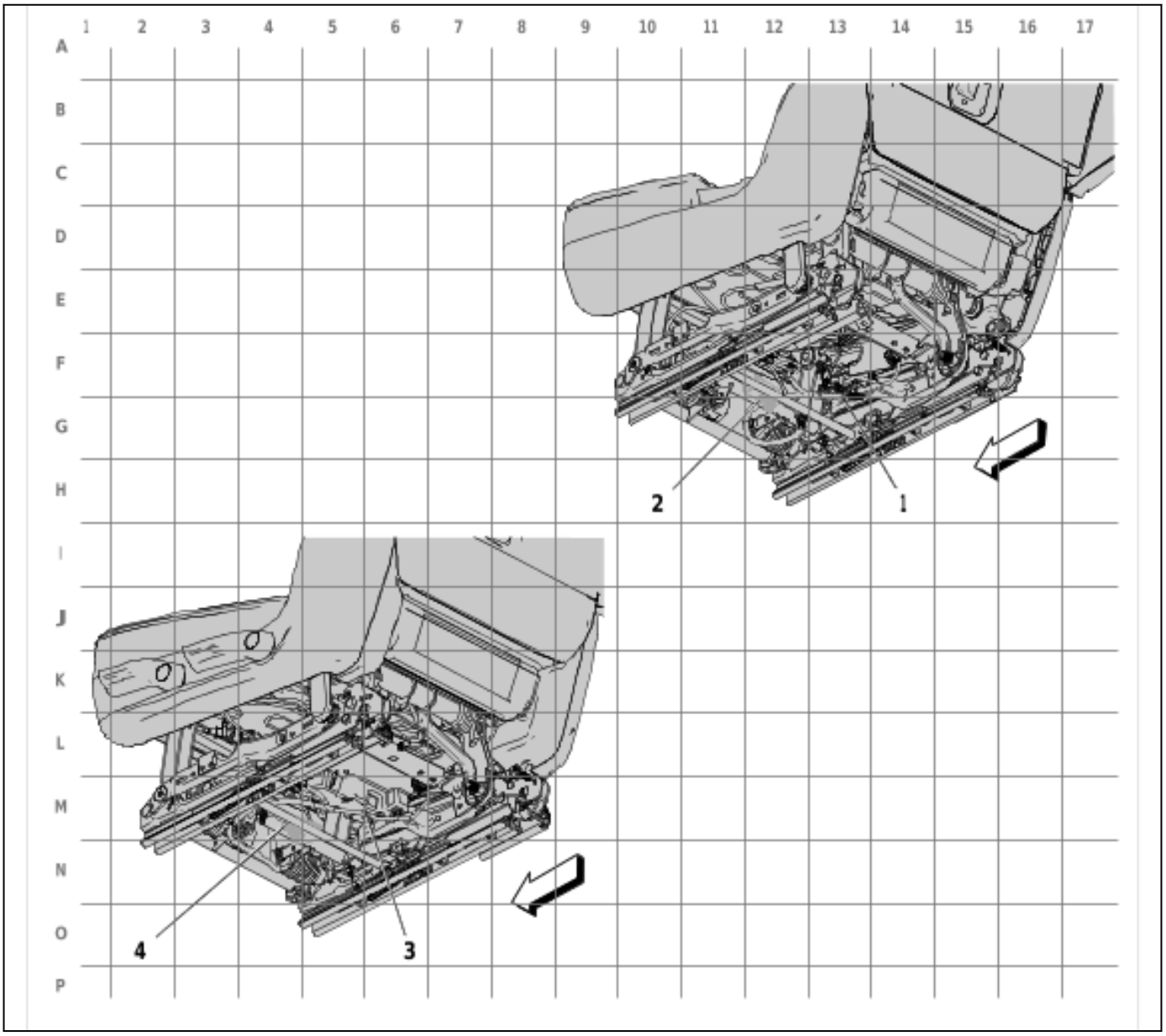

6690082

Items
(1) J367 2nd Row Seat Wiring Harness - Right Cushion
(2) X344A Body Wiring Harness to 2nd Row Seat Wiring Harness - Right Cushion
(3) J365 2nd Row Seat Wiring Harness - Left Cushion
(4) X340A Body Wiring Harness to 2nd Row Seat Wiring Harness - Left Cushion

2nd Row Seat Wiring Harness Routing (ATT)

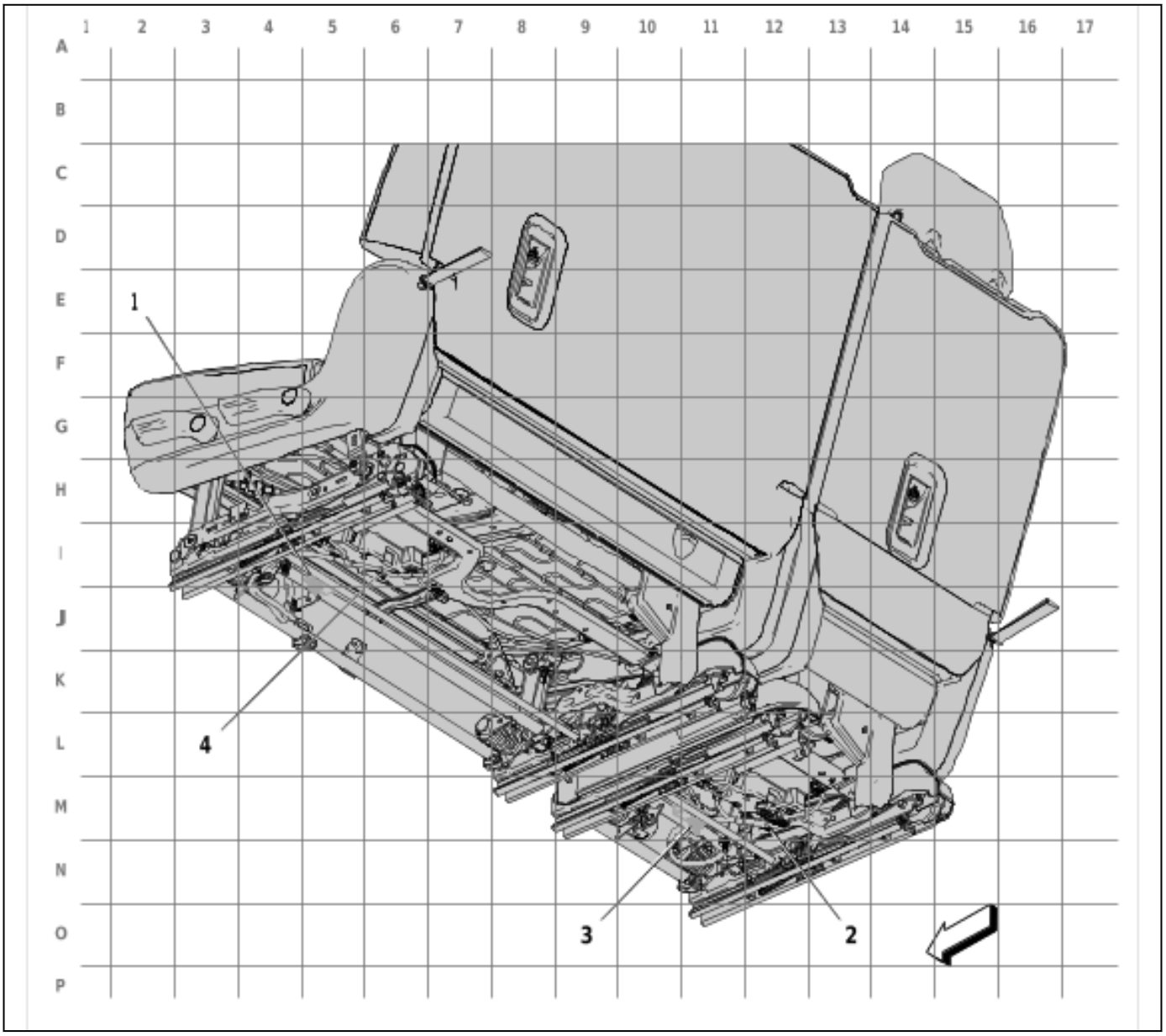

6690083

Items
(1) X340A Body Wiring Harness to 2nd Row Seat Wiring Harness - Left Cushion
(2) J367 2nd Row Seat Wiring Harness - Right Cushion
(3) X344A Body Wiring Harness to 2nd Row Seat Wiring Harness - Right Cushion
(4) J365 2nd Row Seat Wiring Harness - Left Cushion

Chassis Wiring Harness (LWB)

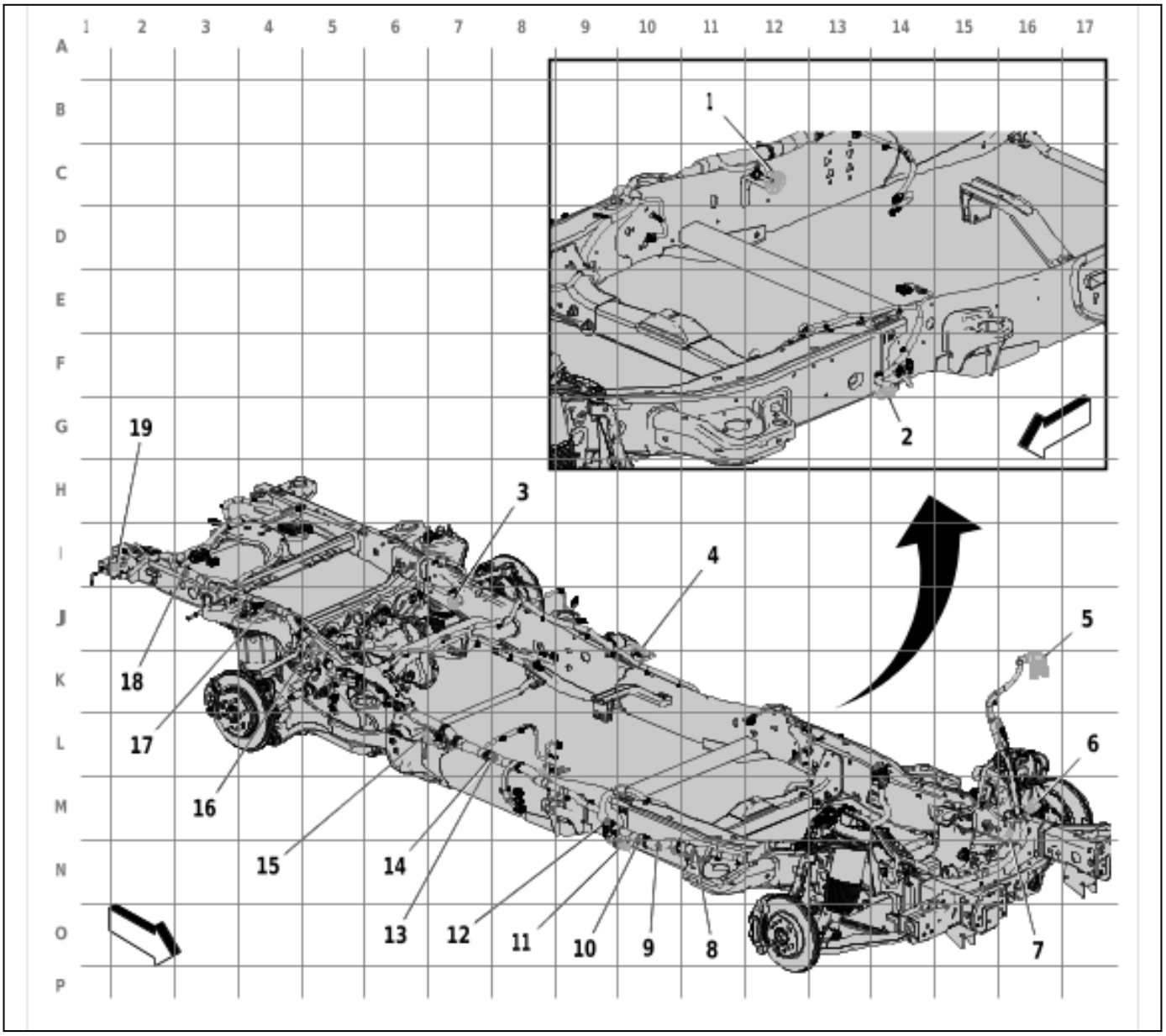

6677060

Items
(1) X999 Chassis Wiring Harness to Reductant Control Module Jumper Wiring Harness (LZ0)
(2) X404L Assist Step M to Chassis Wiring Harness (B3L)
(3) X415R Chassis Wiring Harness to Differential Carrier Lock Wiring Harness (G96)
(4) X904L3 Chassis Wiring Harness to Chassis Rear Wiring Harness Extension Harness - Left (Z95)
(5) X904L Chassis Wiring Harness to Chassis Rear Wiring Harness Extension Harness - Left
(6) X904L2 Chassis Wiring Harness to Chassis Rear Wiring Harness Extension Harness - Left
(7) X400 Chassis Wiring Harness to Body Wiring Harness
(8) X403 Engine Wiring Harness to Chassis Wiring Harness
(9) X405D Chassis Wiring Harness to Power Steering Wiring Harness Extension Harness

Items
(10) J372 Chassis Wiring Harness
(11) J377 Chassis Wiring Harness (LZ0)
(12) J371 Chassis Wiring Harness
(13) X404R Assist Step M to Chassis Wiring Harness (B3L)
(14) J378 Chassis Wiring Harness (LZ0)
(15) J373 Chassis Wiring Harness (LZ0)
(16) J374 Chassis Wiring Harness (LZ0)
(17) X904R2 Chassis Wiring Harness to Chassis Rear Wiring Harness Extension Harness - Right
(18) X904R Chassis Wiring Harness to Chassis Rear Wiring Harness Extension Harness - Right
(19) X904R3 Chassis Wiring Harness to Chassis Rear Wiring Harness Extension Harness - Right (Z95)
(20) J450 Chassis Wiring Harness
(21) J451 Chassis Wiring Harness
(22) J454 Chassis Wiring Harness
(23) X402 Chassis Wiring Harness to Body Wiring Harness

Chassis Wiring Harness (SWB)

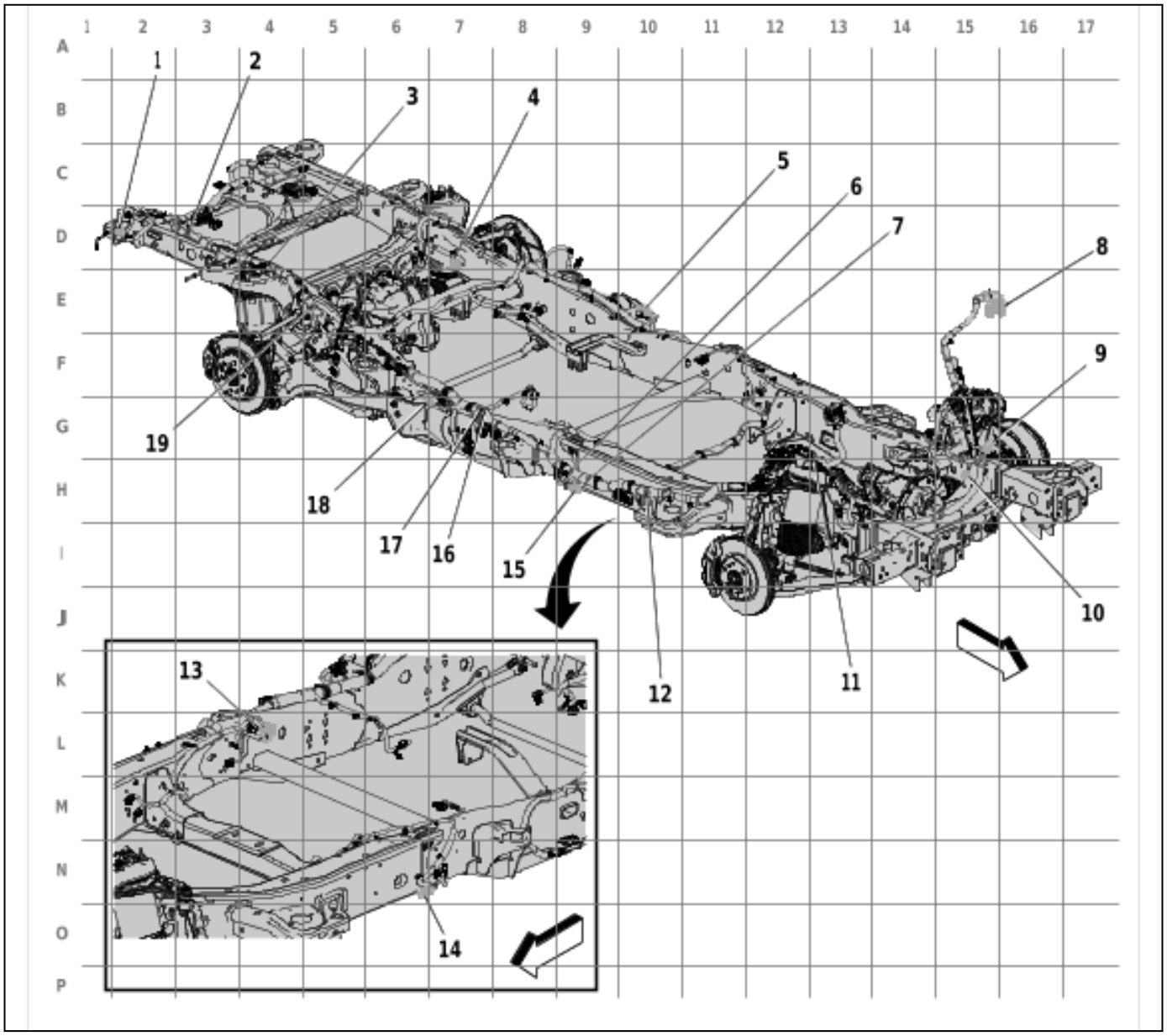

6677061

Items
(1) X402 Chassis Wiring Harness to Body Wiring Harness
(2) J454 Chassis Wiring Harness
(3) J451 Chassis Wiring Harness
(4) X415R Chassis Wiring Harness to Differential Carrier Lock Wiring Harness (G96)
(5) X904L3 Chassis Wiring Harness to Chassis Rear Wiring Harness Extension Harness - Left (Z95)
(6) X904L Chassis Wiring Harness to Chassis Rear Wiring Harness Extension Harness - Left
(7) J377 Chassis Wiring Harness (LZ0)
(8) J371 Chassis Wiring Harness
(9) X400 Chassis Wiring Harness to Body Wiring Harness
(10) X403 Engine Wiring Harness to Chassis Wiring Harness

Items
(11) X405D Chassis Wiring Harness to Power Steering Wiring Harness Extension Harness
(12) J378 Chassis Wiring Harness (LZ0)
(13) J372 Chassis Wiring Harness
(14) X999 Chassis Wiring Harness to Reductant Control Module Jumper Wiring Harness (LZ0)
(15) X404L Assist Step M to Chassis Wiring Harness (B3L)
(16) X404R Assist Step M to Chassis Wiring Harness (B3L)
(17) X904L2 Chassis Wiring Harness to Chassis Rear Wiring Harness Extension Harness - Left
(18) J374 Chassis Wiring Harness (LZ0)
(19) J373 Chassis Wiring Harness (LZ0)
(20) X904R2 Chassis Wiring Harness to Chassis Rear Wiring Harness Extension Harness - Right
(21) X904R Chassis Wiring Harness to Chassis Rear Wiring Harness Extension Harness - Right
(22) X904R3 Chassis Wiring Harness to Chassis Rear Wiring Harness Extension Harness - Right (Z95)
(23) J450 Chassis Wiring Harness

Headlamp Automatic Control Ambient Light Sensor Wiring Harness Routing

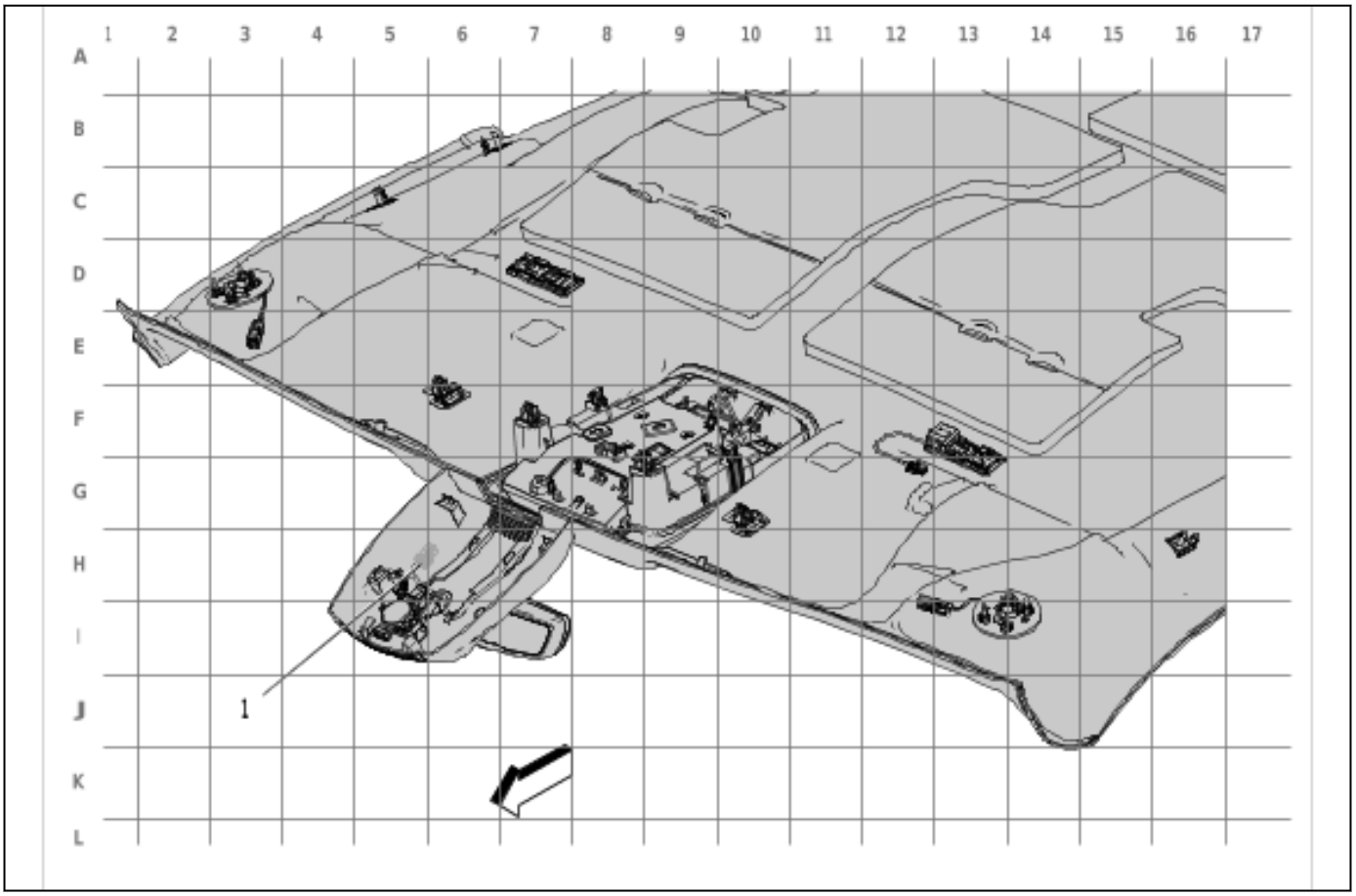

6678293

Items
(1) X370B Headlamp Automatic Control Ambient Light Sensor Wiring Harness to Headlining Trim Panel Harness

Headlining Trim Panel Harness (C3U)

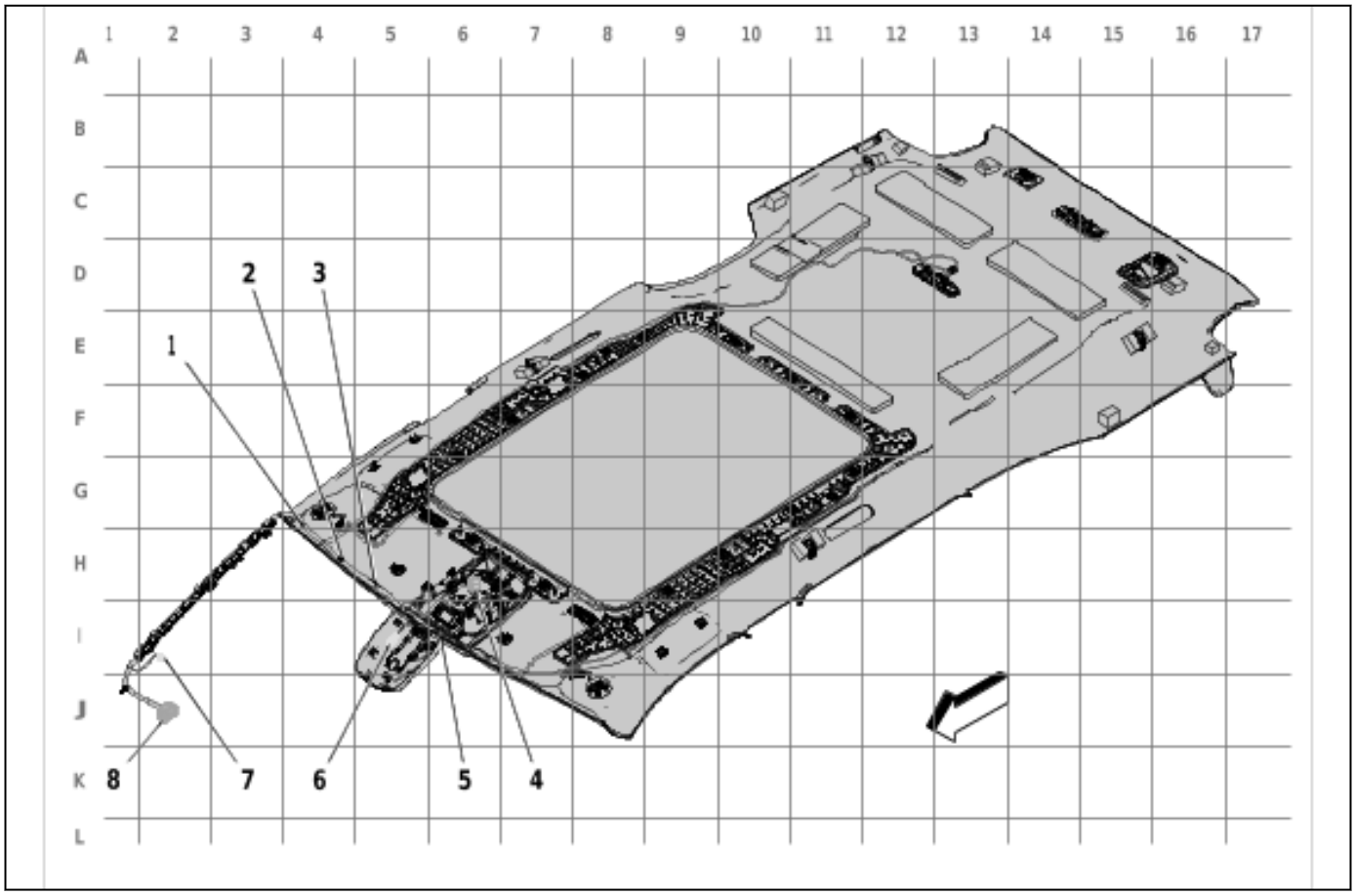

6676708

Items
(1) J383 Headlining Trim Panel Harness
(2) J381 Headlining Trim Panel Harness
(3) J382 Headlining Trim Panel Harness (C3U)
(4) X375 Sunroof Wiring Harness to Headlining Trim Panel Harness (C3U)
(5) J318 Headlining Trim Panel Harness
(6) X370B Headlamp Automatic Control Ambient Light Sensor Wiring Harness to Headlining Trim Panel Harness
(7) X371 Headlining Trim Panel Harness to Instrument Panel Wiring Harness
(8) X370A Headlining Trim Panel Harness to Instrument Panel Wiring Harness

Headlining Trim Panel Harness (- C3U)

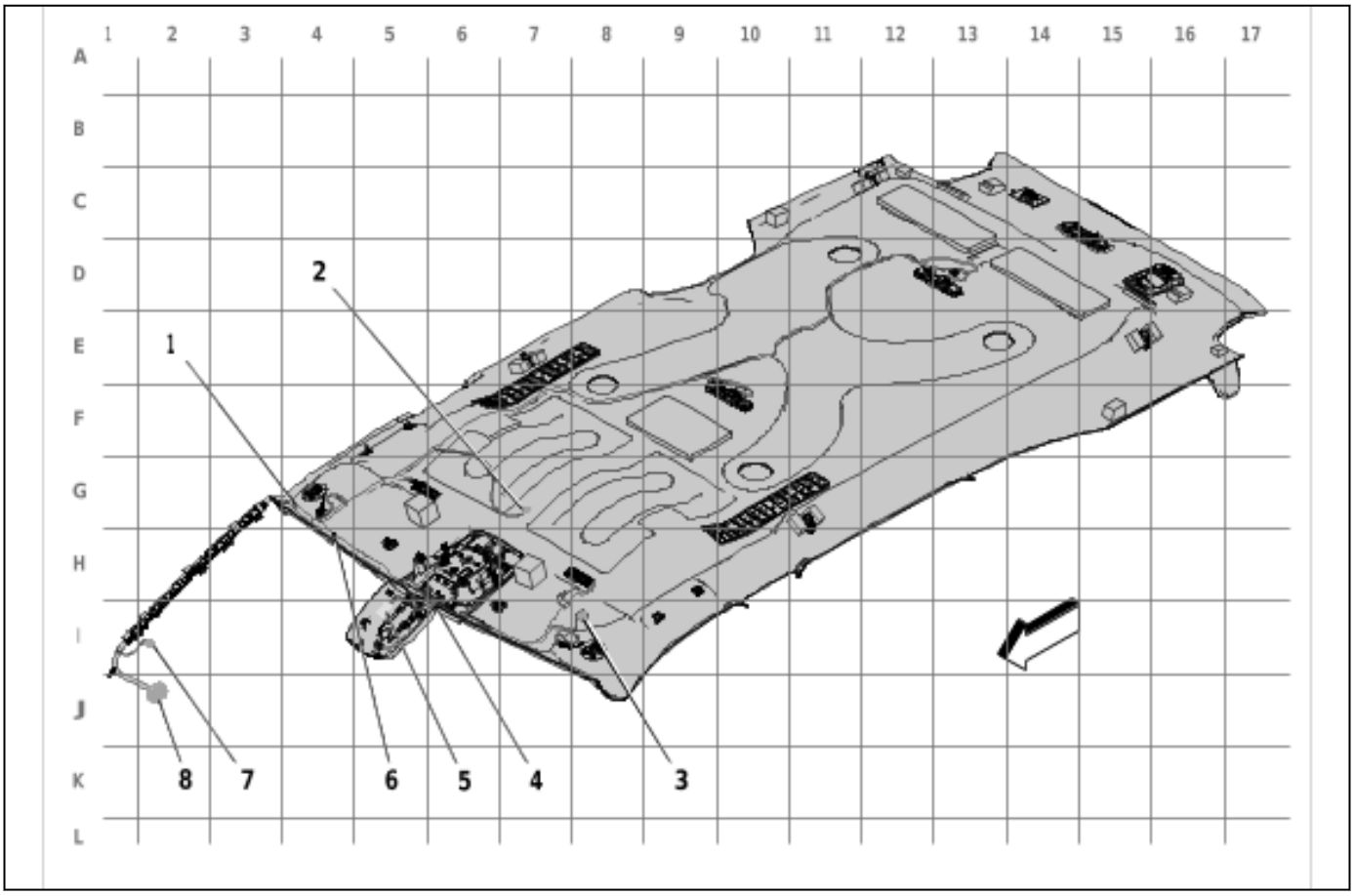

6676709

Items
(1) J383 Headlining Trim Panel Harness
(2) X385 Headlining Trim Panel Harness to Police Accessories Wiring Harness (5W4 / 9C1)
(3) X372 Headlining Trim Panel Harness to Police Accessories Wiring Harness (5W4 / 9C1)
(4) J318 Headlining Trim Panel Harness
(5) X370B Headlamp Automatic Control Ambient Light Sensor Wiring Harness to Headlining Trim Panel Harness
(6) J381 Headlining Trim Panel Harness
(7) X371 Headlining Trim Panel Harness to Instrument Panel Wiring Harness
(8) X370A Headlining Trim Panel Harness to Instrument Panel Wiring Harness

Antenna Coaxial Cable Routing

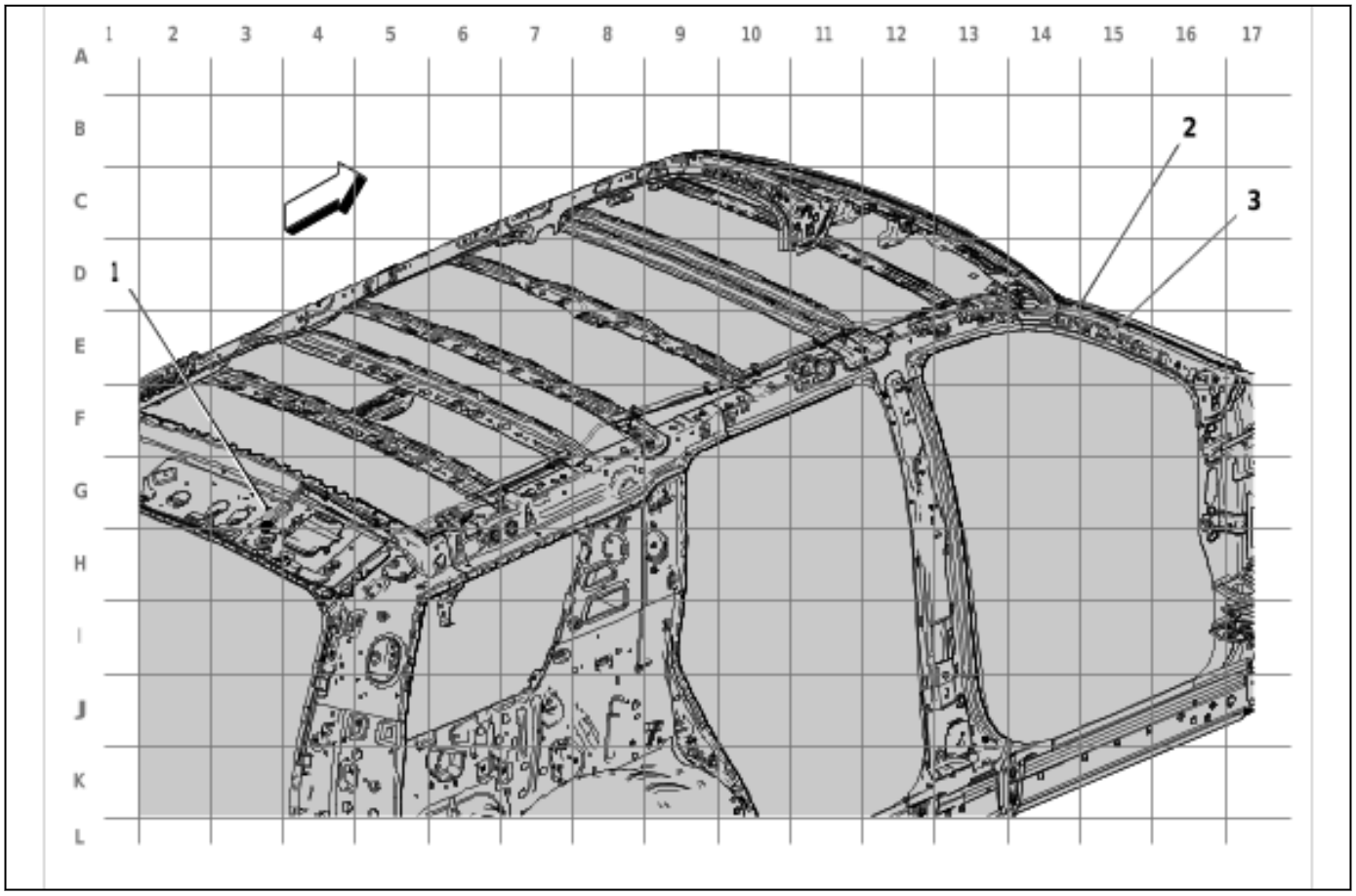

6678514

Items
(1) X996 Antenna Coaxial Cable to Rearview Driver Information Camera Rear Closure Coaxial Cable (DRZ)
(2) X396 Instrument Panel Wiring Harness to Antenna Wiring Harness
(3) X397 Instrument Panel Wiring Harness to Antenna Wiring Harness

Sunroof Wiring Harness Routing

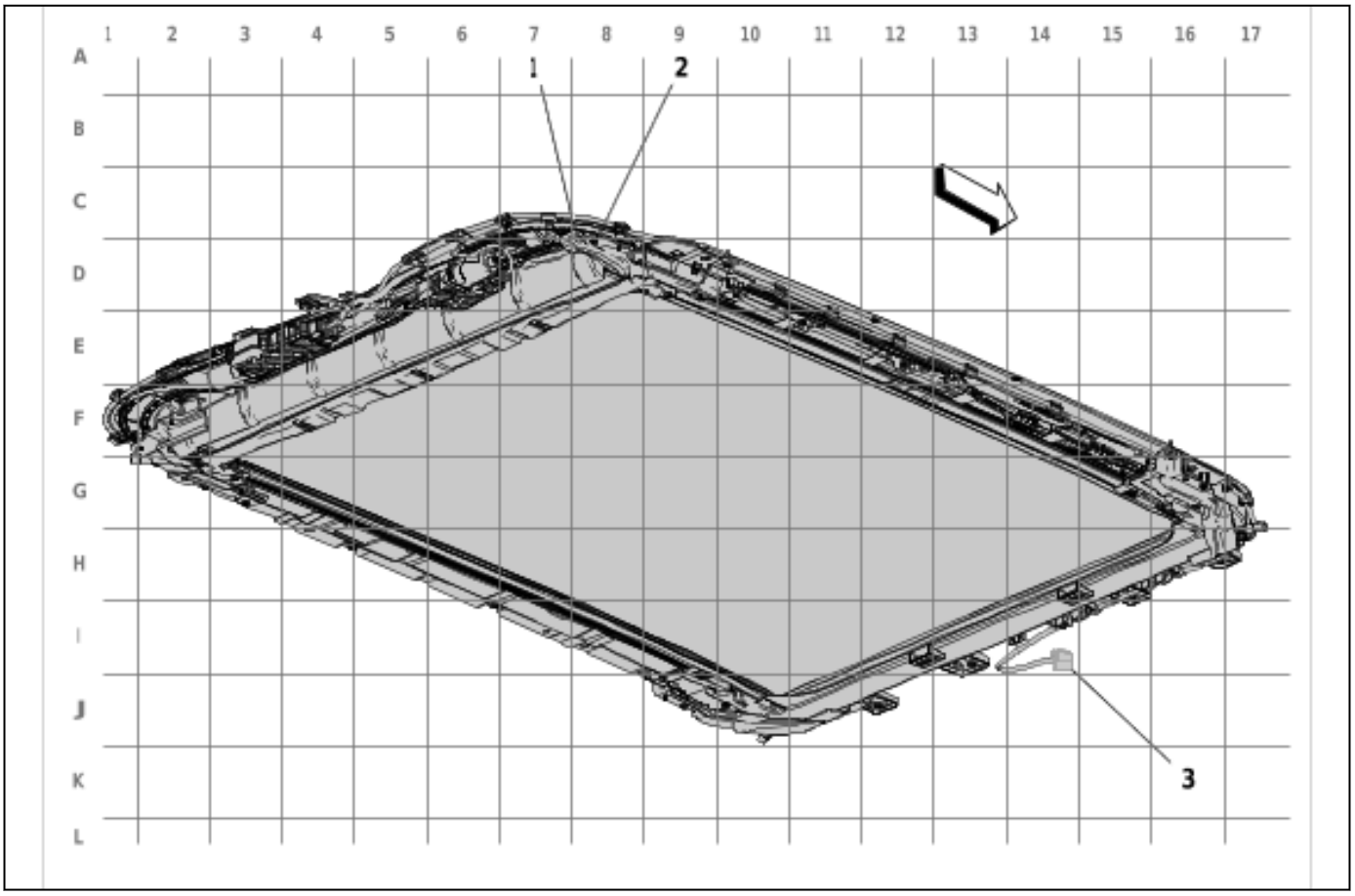

6678294

Items
(1) J384 Sunroof Wiring Harness (C3U)
(2) J385 Sunroof Wiring Harness (C3U)
(3) X375 Sunroof Wiring Harness to Headlining Trim Panel Harness (C3U)

Front Side Door Door Wiring Harness - Driver Routing

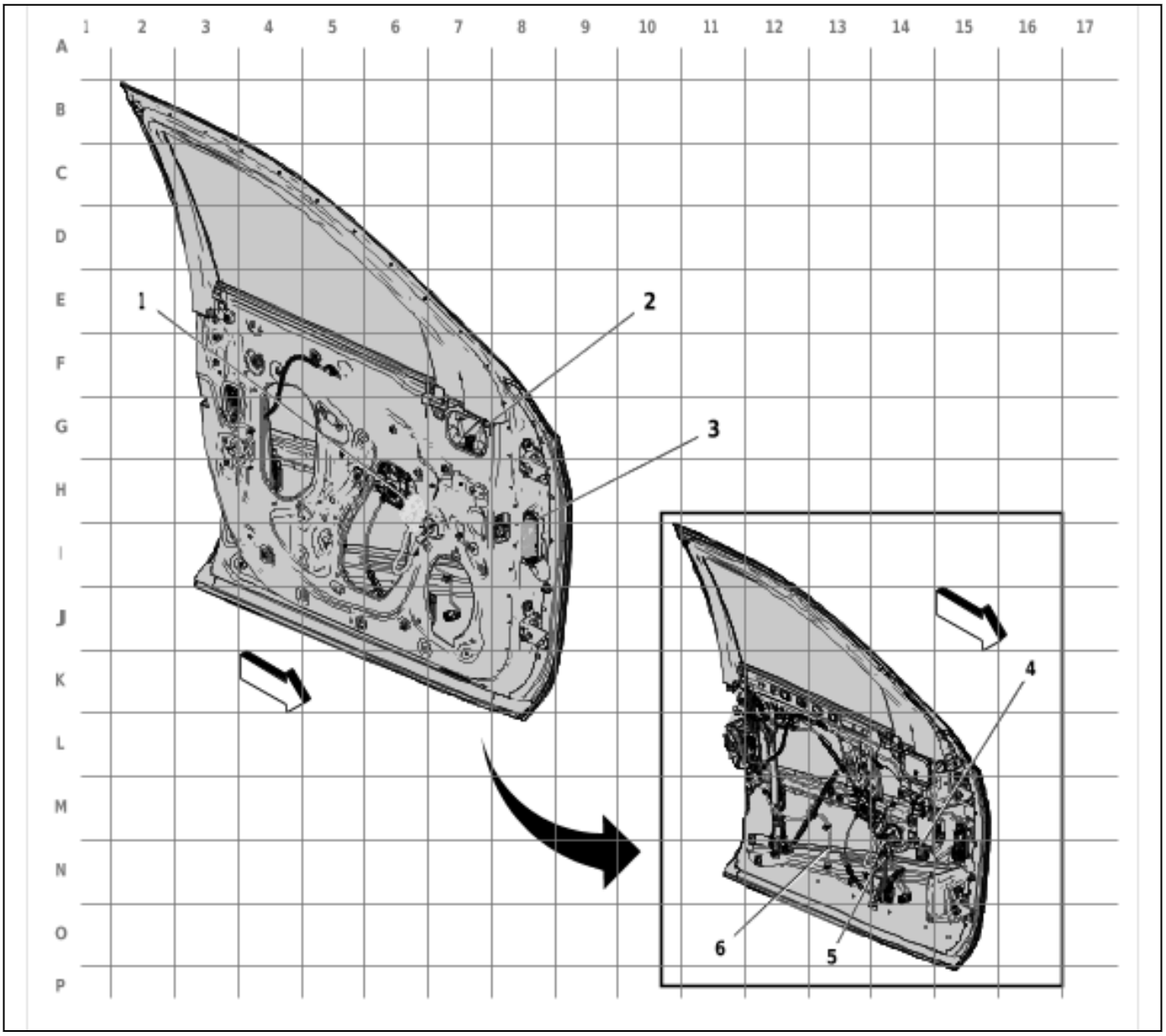

6682043

Items
(1) X505 Front Side Door Door Wiring Harness - Driver to Front Side Door Door Lock Door Wiring Harness - Driver
(2) W15DL Blunt Cut - Strobe Lamps Left Front Door (5W4 / 9C1)
(3) X500 Front Side Door Door Wiring Harness - Driver to Body Wiring Harness
(4) J500 Front Side Door Door Wiring Harness - Driver
(5) J510 Front Side Door Door Wiring Harness - Driver
(6) J502 Front Side Door Door Wiring Harness - Driver

Front Side Door Door Lock Door Wiring Harness - Driver Routing

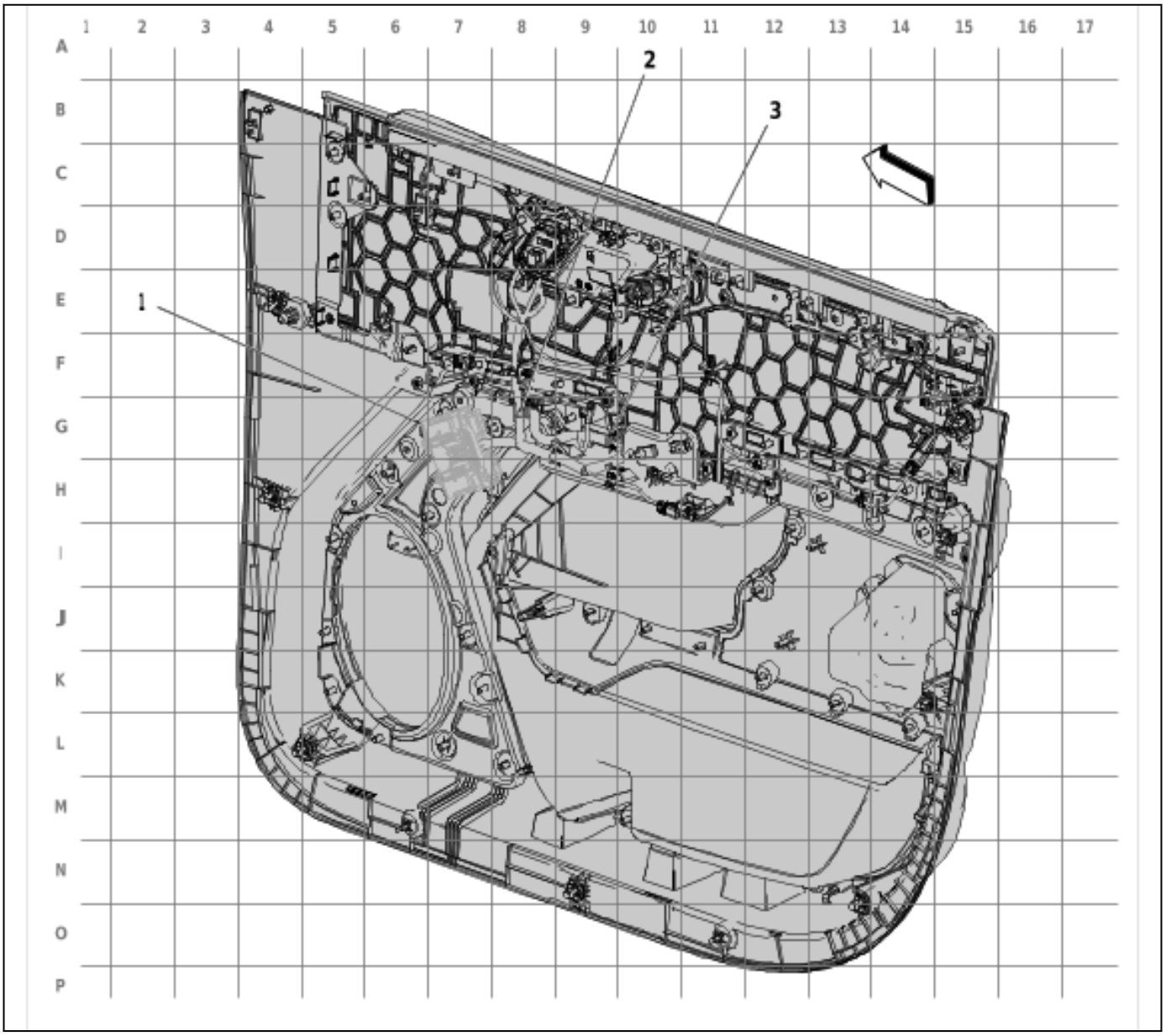

6678515

Items
(1) X505 Front Side Door Door Wiring Harness - Driver to Front Side Door Door Lock Door Wiring Harness - Driver
(2) J505 Front Side Door Door Lock Door Wiring Harness - Driver
(3) J507 Front Side Door Door Lock Door Wiring Harness - Driver

Front Side Door Door Wiring Harness - Passenger Routing

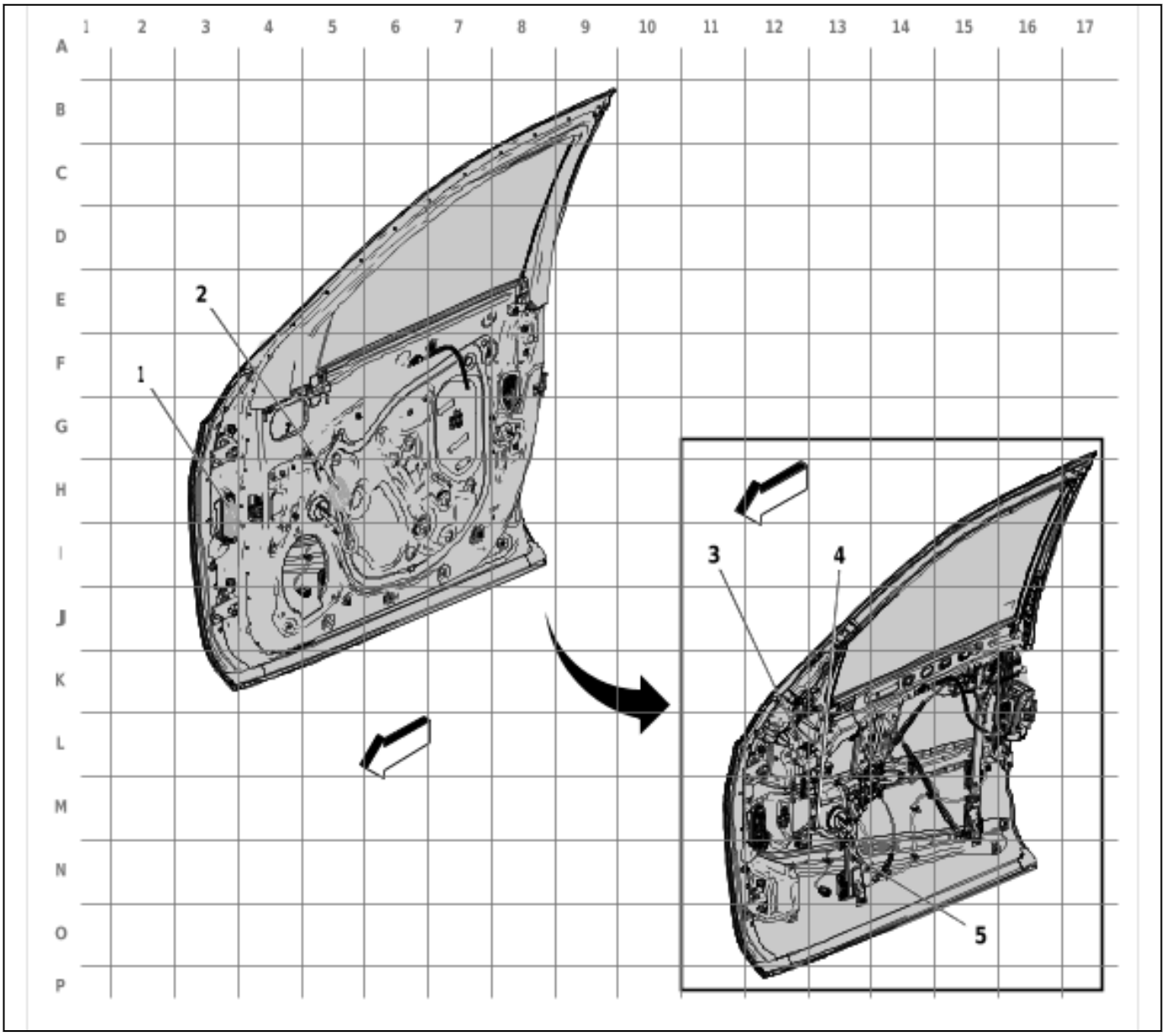

6682044

Items
(1) X600 Front Side Door Door Wiring Harness - Passenger to Body Wiring Harness
(2) X605 Front Side Door Door Wiring Harness - Passenger to Front Side Door Door Lock Door Wiring Harness - Passenger
(3) W15DR Blunt Cut - Strobe Lamps Right Front Door (5W4 / 9C1)
(4) J609 Front Side Door Door Wiring Harness - Passenger
(5) J601 Front Side Door Door Wiring Harness - Passenger

Front Side Door Door Lock Door Wiring Harness - Passenger Routing

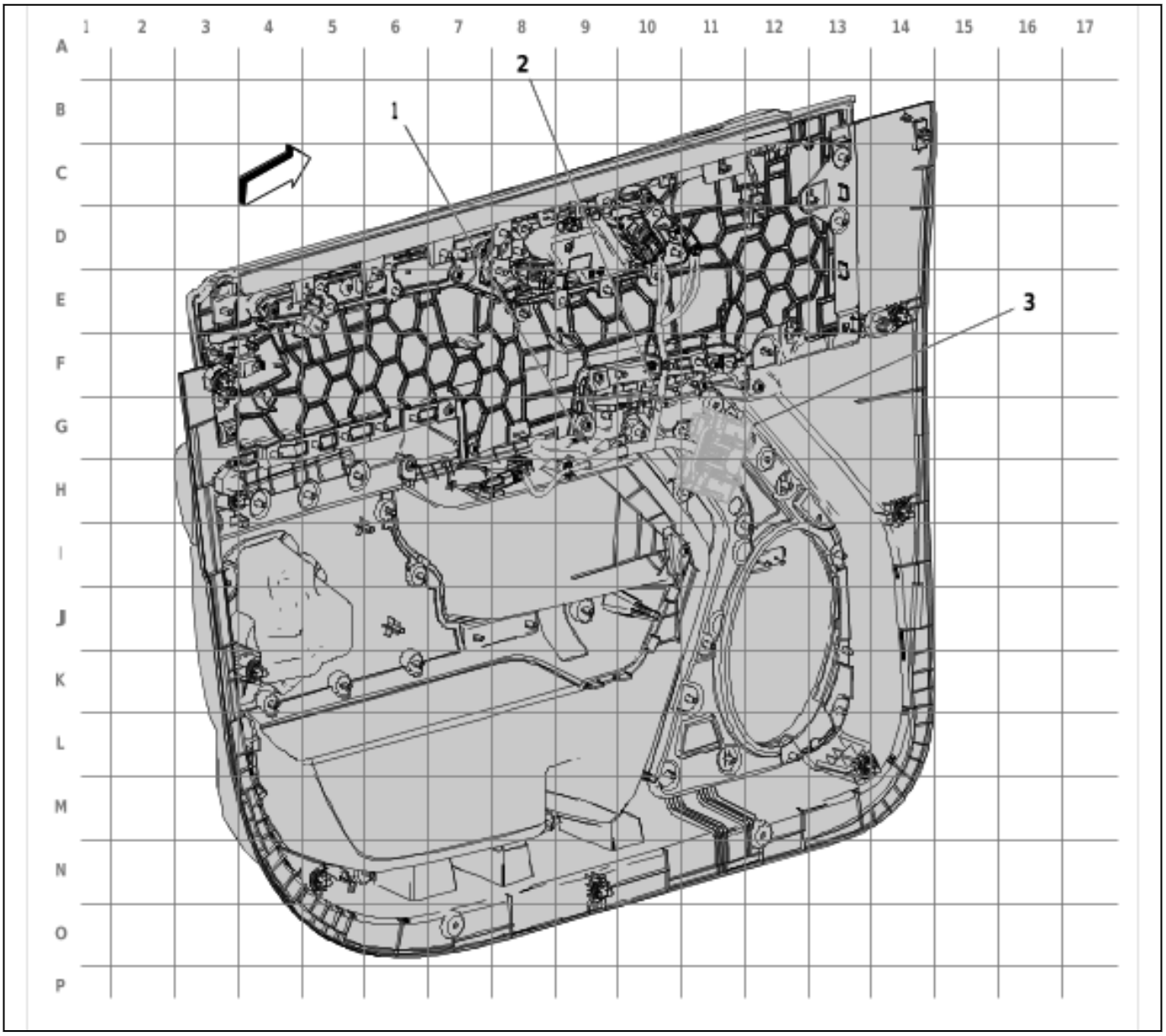

6678516

Items
(1) J606 Front Side Door Door Lock Door Wiring Harness - Passenger
(2) J605 Front Side Door Door Lock Door Wiring Harness - Passenger
(3) X605 Front Side Door Door Wiring Harness - Passenger to Front Side Door Door Lock Door Wiring Harness - Passenger

Rear Side Door Door Wiring Harness - Left Routing (LWB)

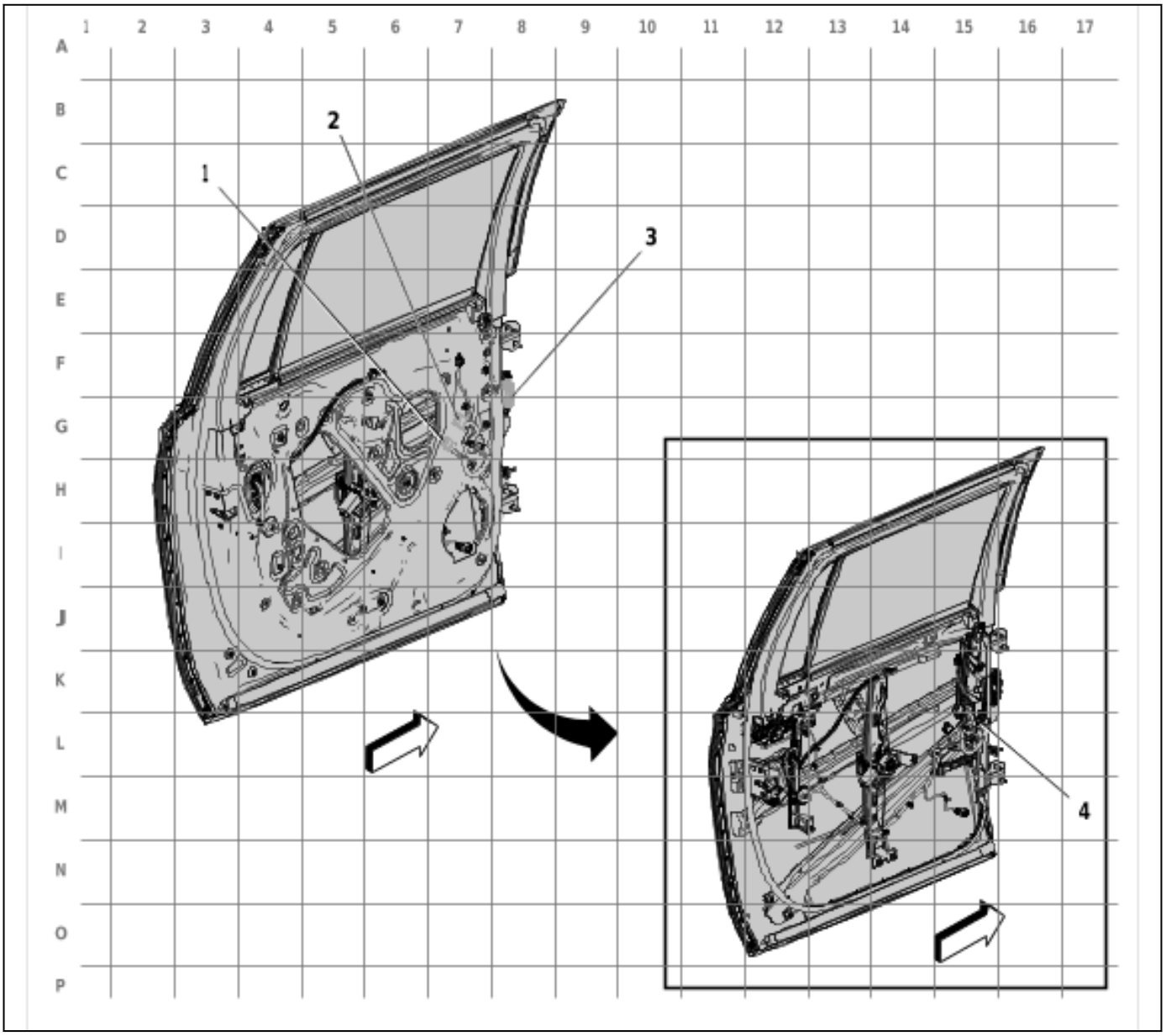

6682045

Items
(1) X705 Rear Side Door Door Wiring Harness - Left to Rear Side Door Door Lock Door Wiring Harness - Left
(2) X706 Rear Side Door Door Wiring Harness - Left to Rear Side Door Door Lock Door Wiring Harness - Left
(3) X700 Rear Side Door Door Wiring Harness - Left to Body Wiring Harness
(4) J702 Rear Side Door Door Wiring Harness - Left

Rear Side Door Door Wiring Harness - Left Routing (SWB)

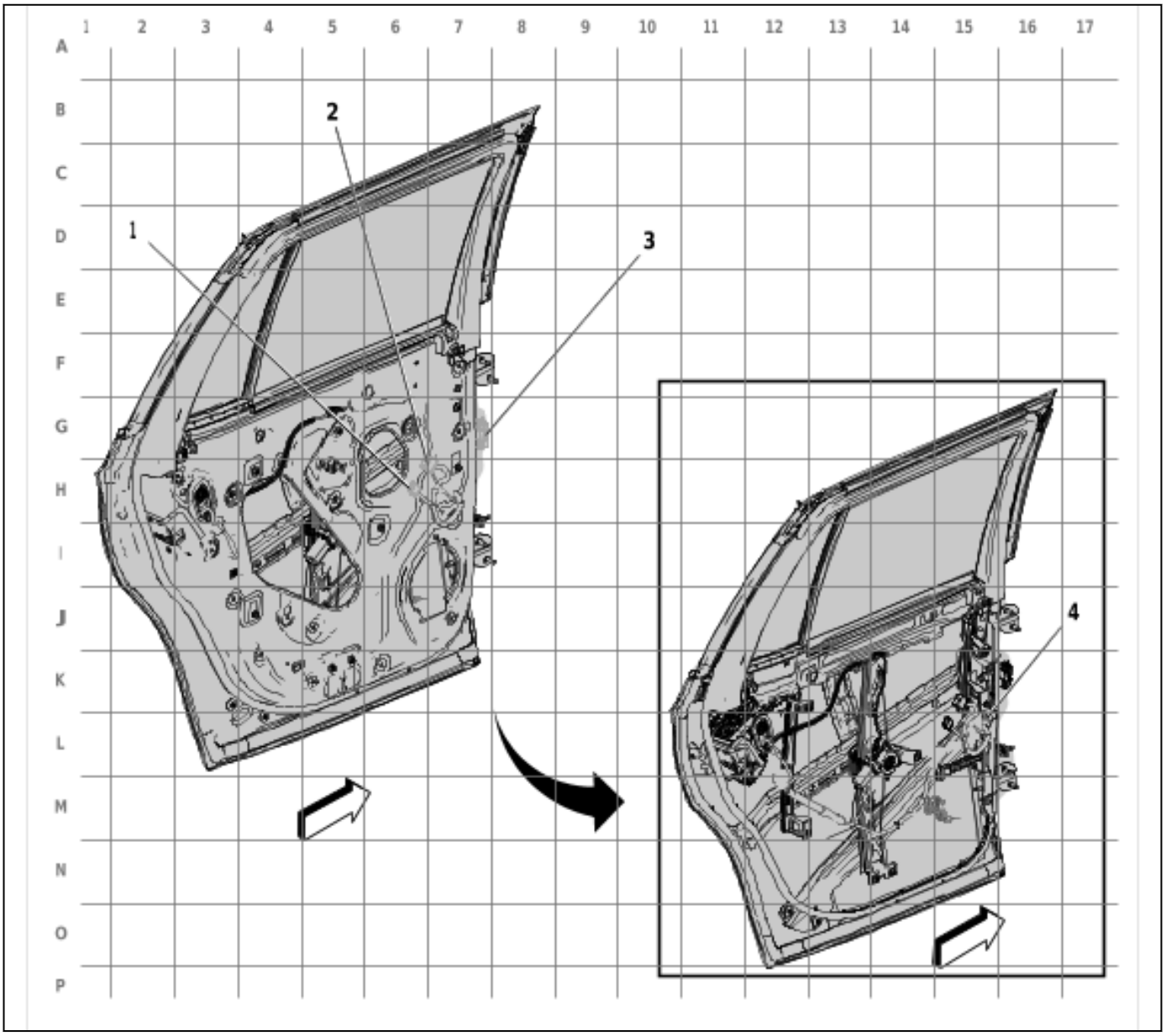

6682046

Items
(1) X705 Rear Side Door Door Wiring Harness - Left to Rear Side Door Door Lock Door Wiring Harness - Left
(2) X706 Rear Side Door Door Wiring Harness - Left to Rear Side Door Door Lock Door Wiring Harness - Left
(3) X700 Rear Side Door Door Wiring Harness - Left to Body Wiring Harness
(4) J702 Rear Side Door Door Wiring Harness - Left

Rear Side Door Door Lock Door Wiring Harness - Left Routing

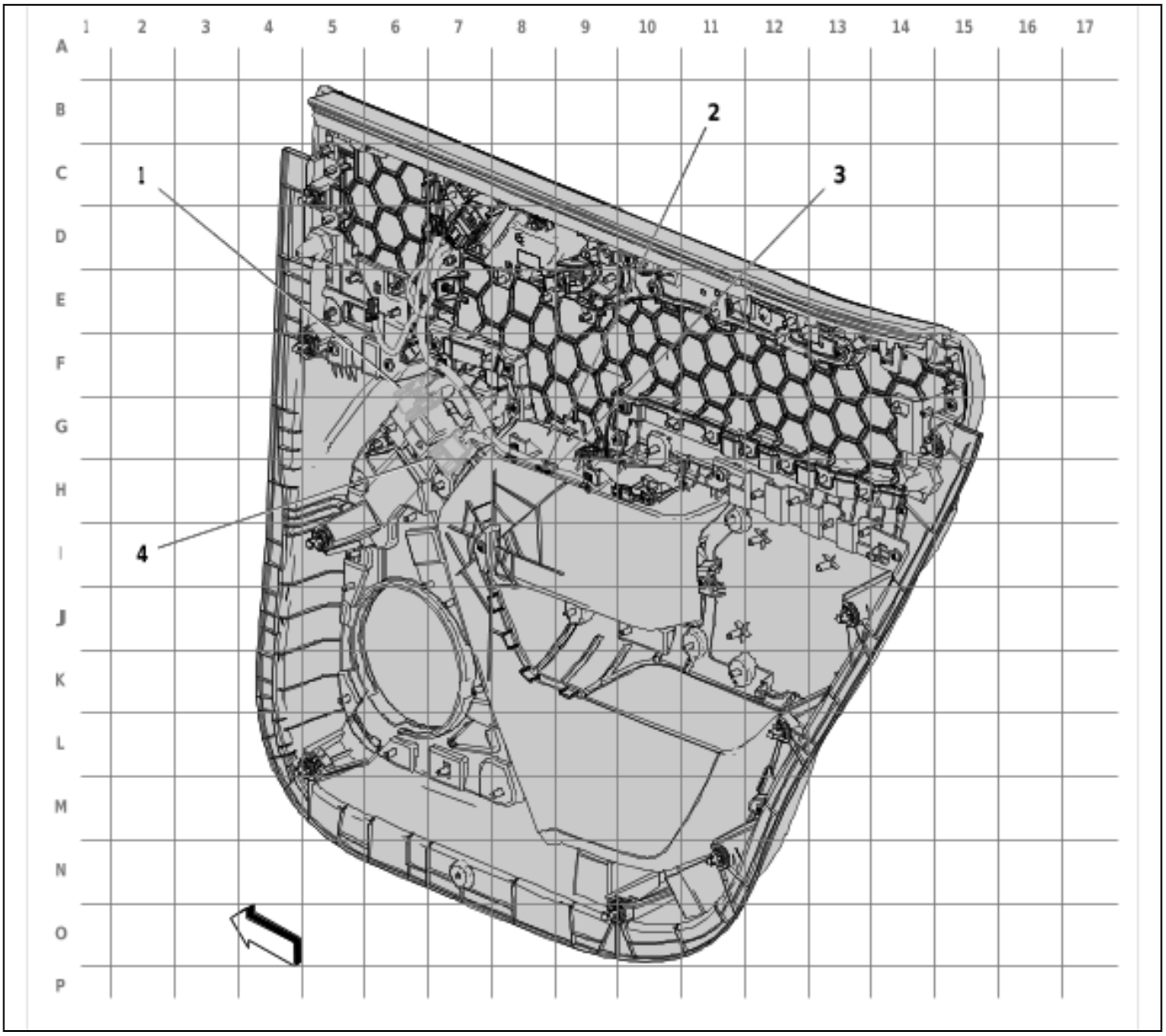

6678517

Items
(1) X706 Rear Side Door Door Wiring Harness - Left to Rear Side Door Door Lock Door Wiring Harness - Left
(2) J705 Rear Side Door Door Lock Door Wiring Harness - Left
(3) J706 Rear Side Door Door Lock Door Wiring Harness - Left
(4) X705 Rear Side Door Door Wiring Harness - Left to Rear Side Door Door Lock Door Wiring Harness - Left

Rear Side Door Door Wiring Harness - Right Routing (LWB)

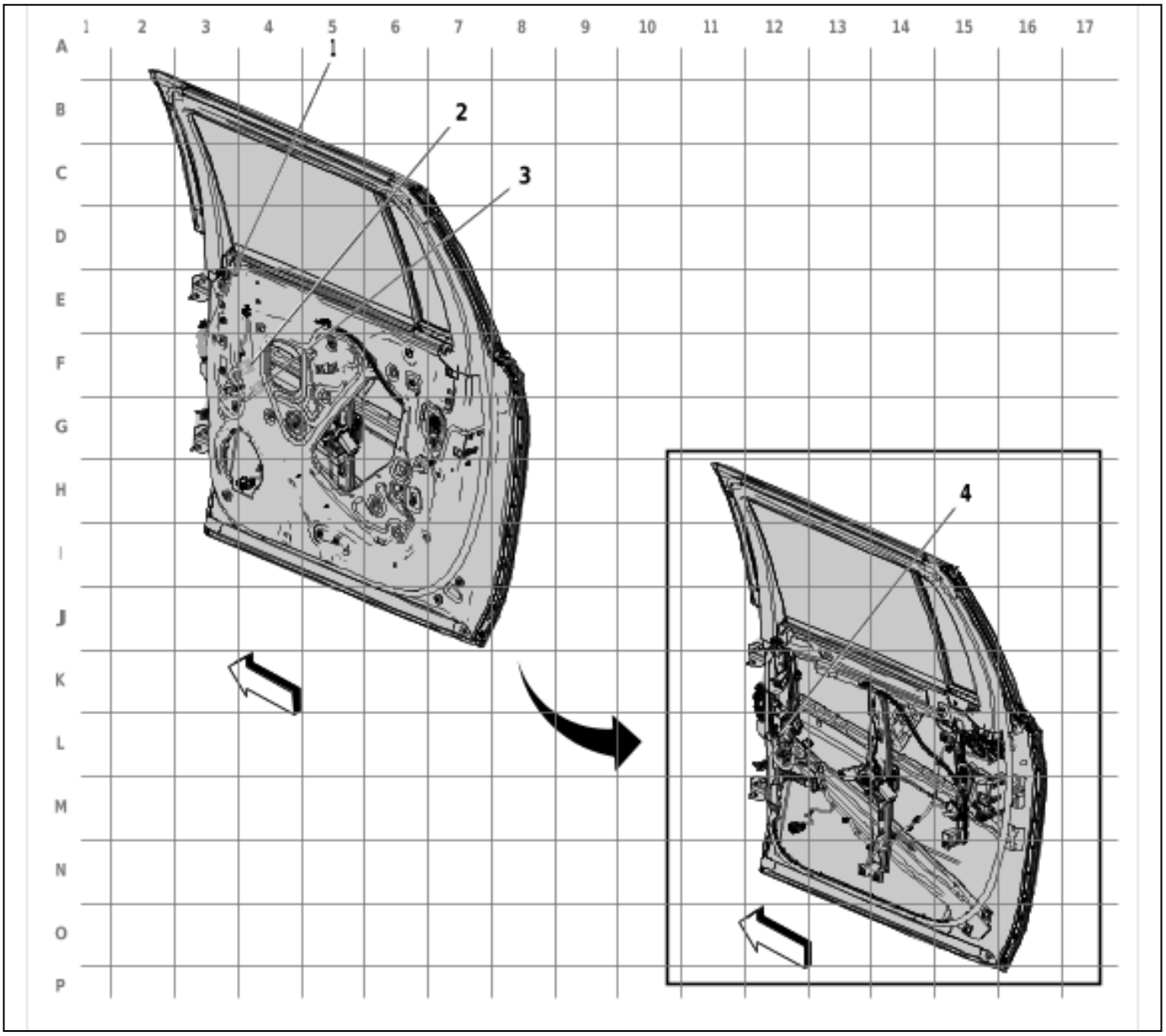

6682047

Items
(1) X800 Rear Side Door Door Wiring Harness - Right to Body Wiring Harness
(2) X806 Rear Side Door Door Wiring Harness - Right to Rear Side Door Door Lock Door Wiring Harness - Right
(3) X805 Rear Side Door Door Wiring Harness - Right to Rear Side Door Door Lock Door Wiring Harness - Right
(4) J800 Rear Side Door Door Wiring Harness - Right

Rear Side Door Door Wiring Harness - Right Routing (SWB)

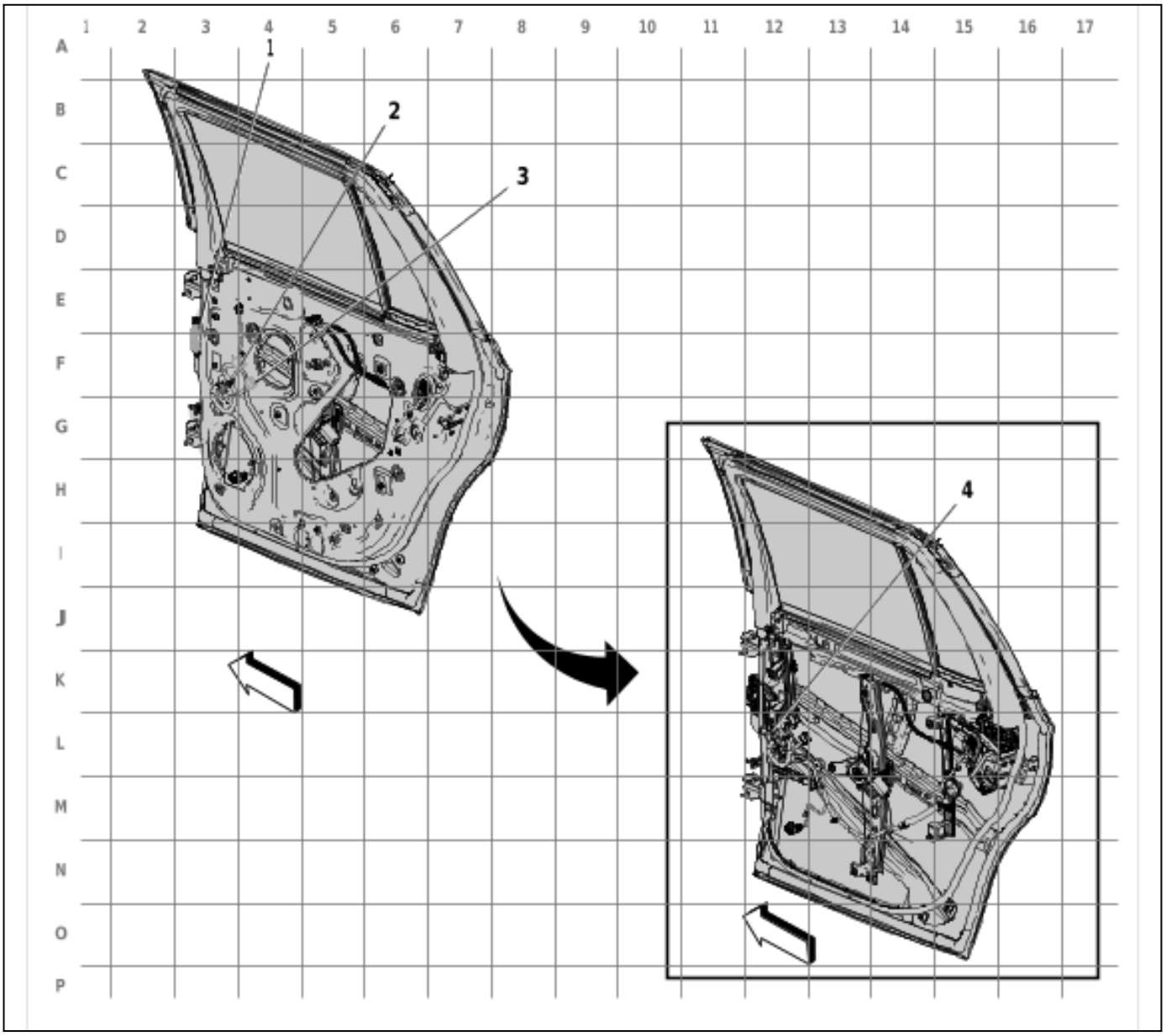

6682048

Items
(1) X800 Rear Side Door Door Wiring Harness - Right to Body Wiring Harness
(2) X806 Rear Side Door Door Wiring Harness - Right to Rear Side Door Door Lock Door Wiring Harness - Right
(3) X805 Rear Side Door Door Wiring Harness - Right to Rear Side Door Door Lock Door Wiring Harness - Right
(4) J800 Rear Side Door Door Wiring Harness - Right

Rear Side Door Door Lock Door Wiring Harness - Right Routing

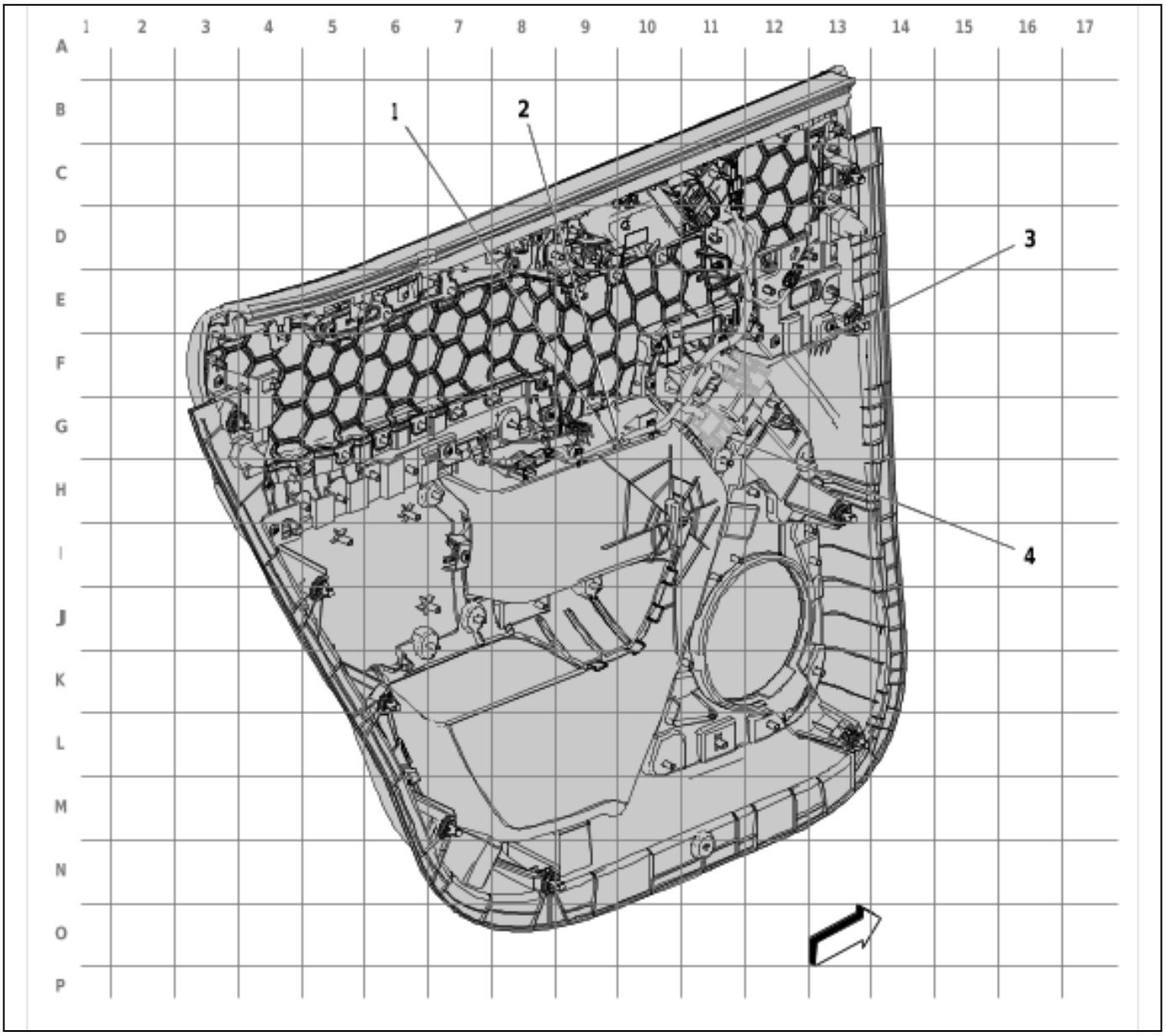

6678518

Items
(1) J805 Rear Side Door Door Lock Door Wiring Harness - Right
(2) J806 Rear Side Door Door Lock Door Wiring Harness - Right
(3) X806 Rear Side Door Door Wiring Harness - Right to Rear Side Door Door Lock Door Wiring Harness - Right
(4) X805 Rear Side Door Door Wiring Harness - Right to Rear Side Door Door Lock Door Wiring Harness - Right

3rd Row Seat Wiring Harness Routing

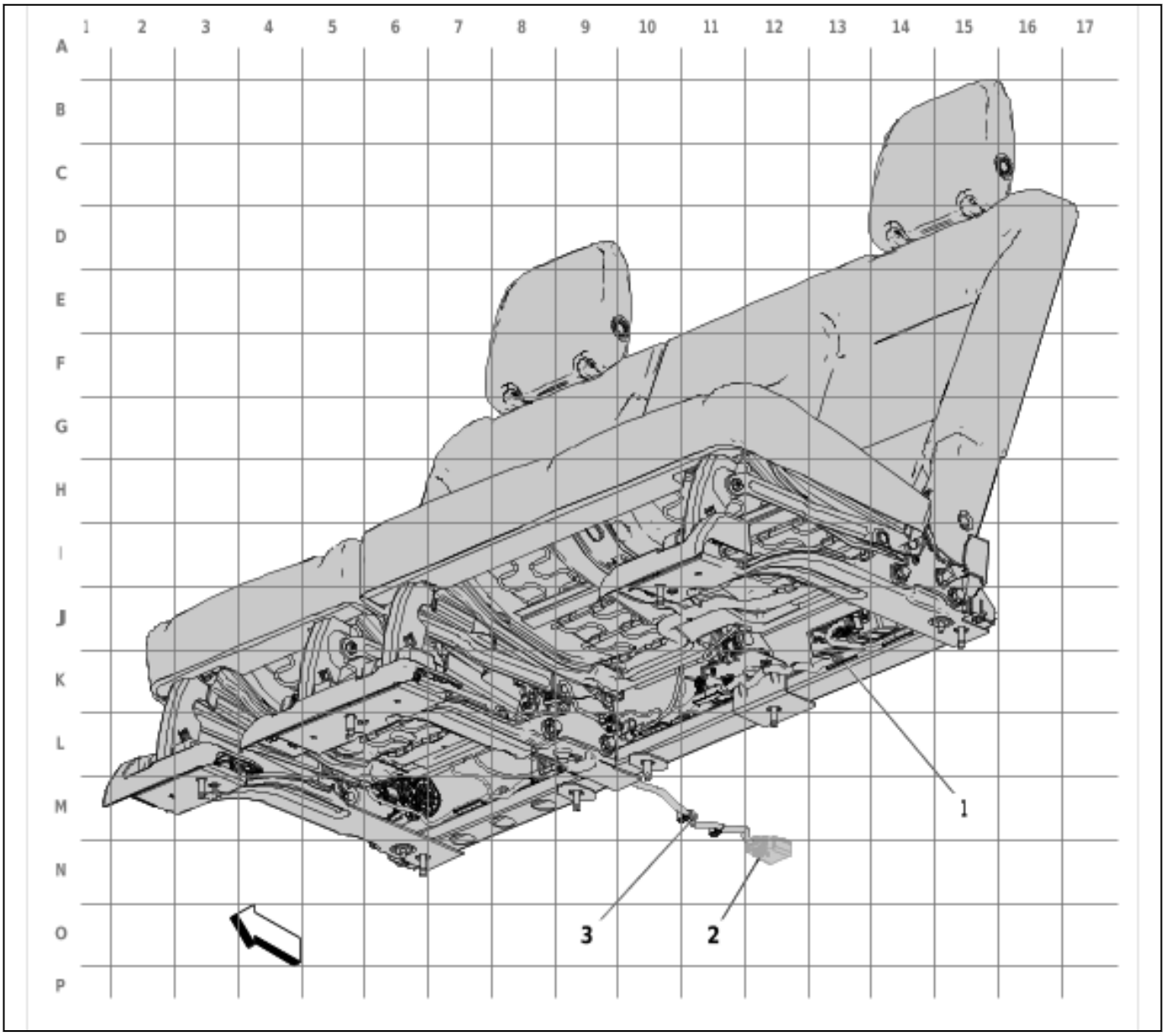

6691851

Items
(1) J441 3rd Row Seat Wiring Harness (AS8)
(2) X346 Body Wiring Harness to 3rd Row Seat Wiring Harness
(3) J466 3rd Row Seat Wiring Harness (UH6)

Emission Reduction Fluid Tank Reservoir Wire Harness Routing (LZ0)

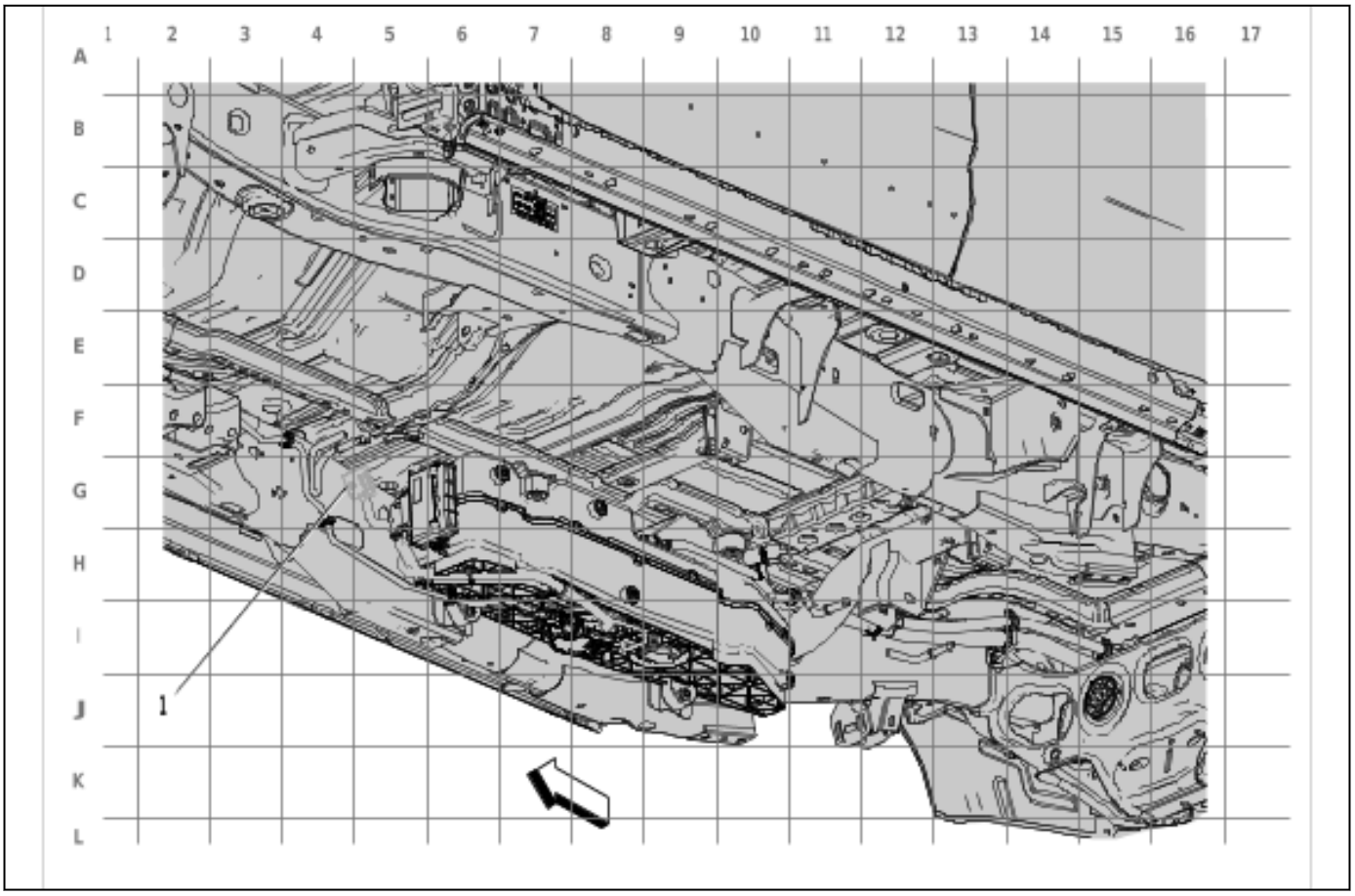

6666132

Items
(1) X999 Chassis Wiring Harness to Reductant Control Module Jumper Wiring Harness (LZ0)

Body Wiring Harness Routing - Luggage Compartment Left Side (LWB)

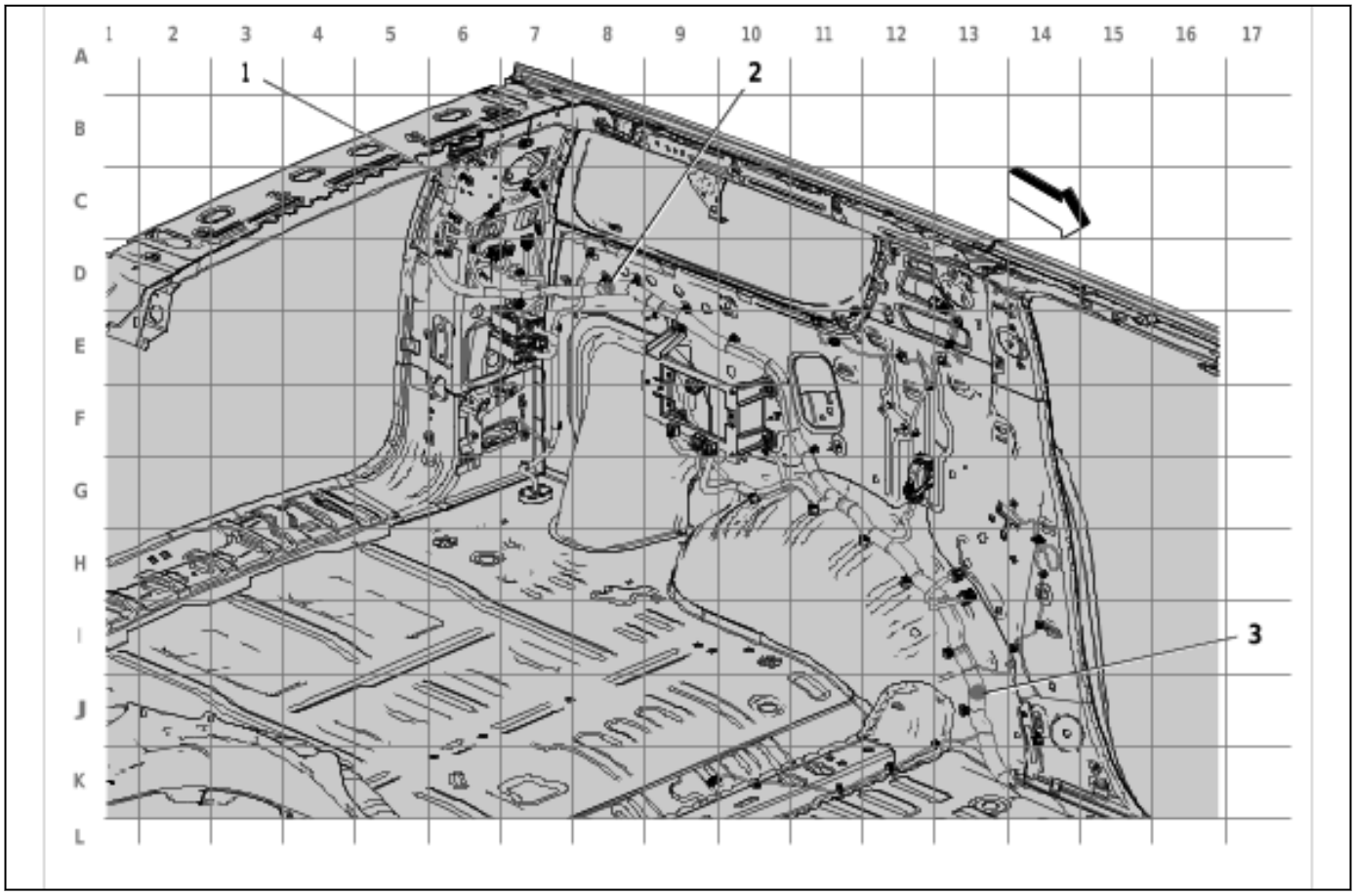

6685753

Items
(1) X960 Roof Wiring Harness to Body Wiring Harness
(2) J404 Body Wiring Harness
(3) J403 Body Wiring Harness

Body Wiring Harness Routing - Luggage Compartment Left Side (SWB)

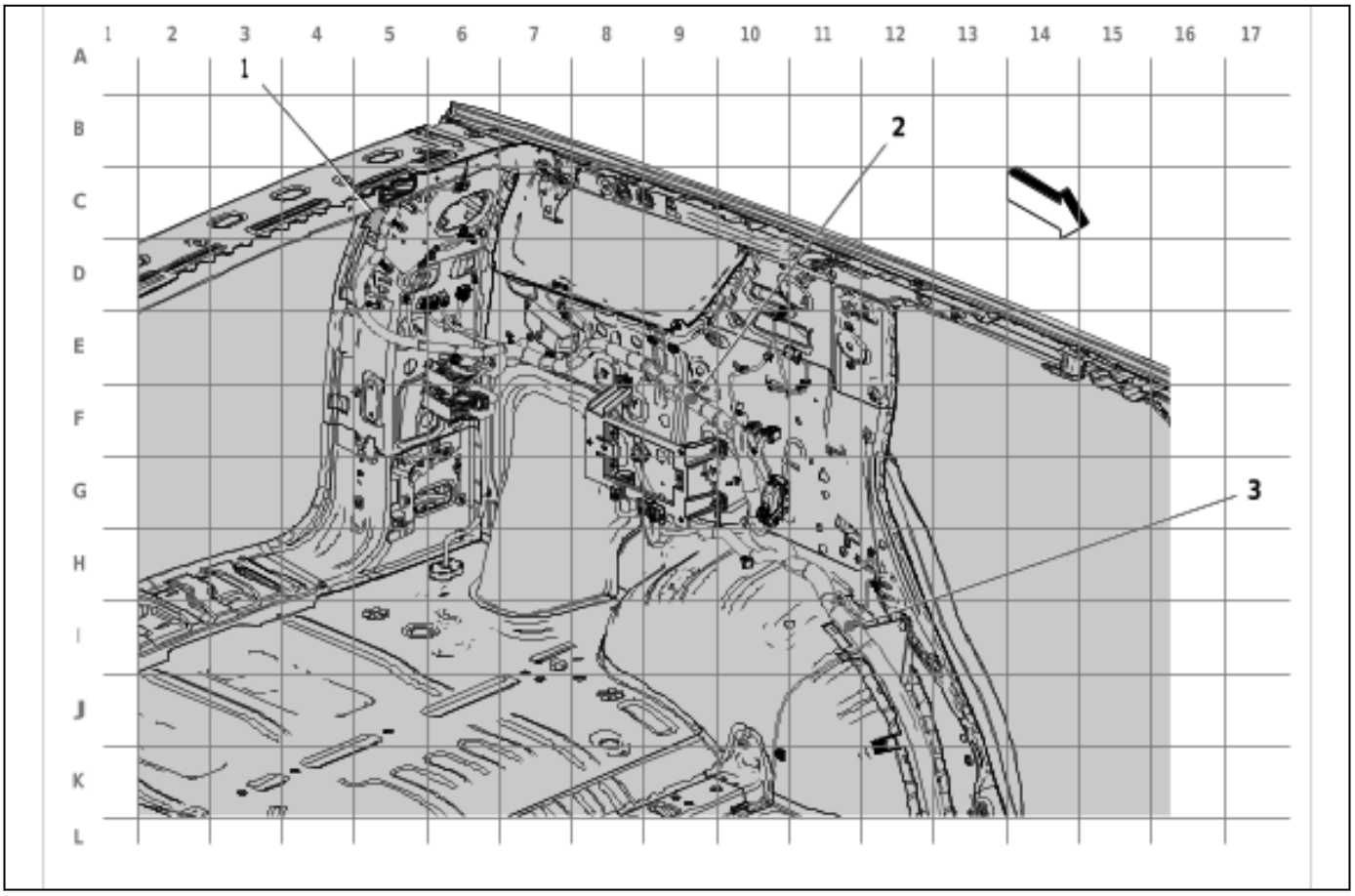

6685754

Items
(1) X960 Roof Wiring Harness to Body Wiring Harness
(2) J404 Body Wiring Harness
(3) J403 Body Wiring Harness

Body Wiring Harness Routing - Luggage Compartment Right Side (LWB)

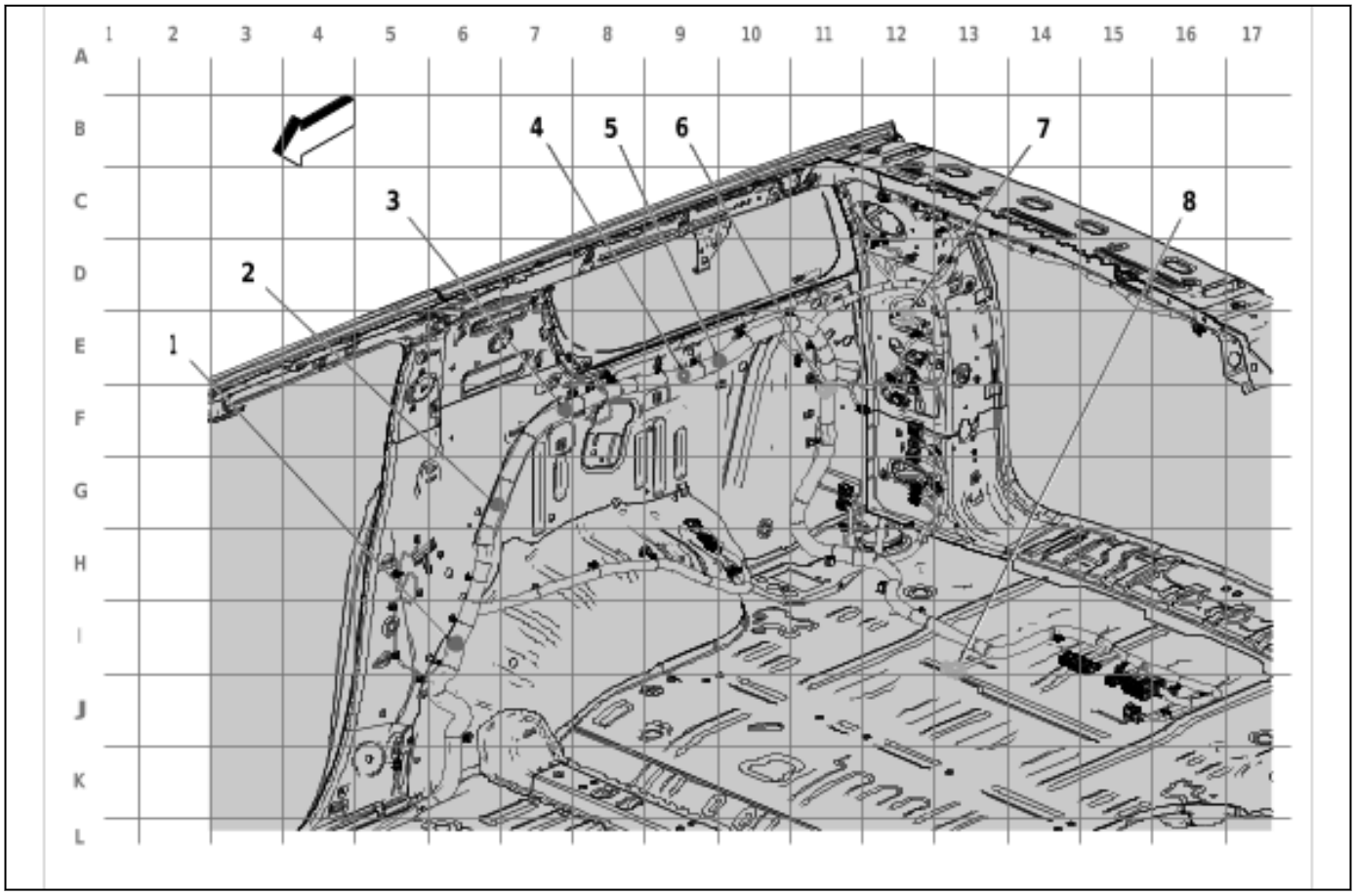

6685755

Items
(1) J392 Body Wiring Harness
(2) J402 Body Wiring Harness
(3) J443 Body Wiring Harness
(4) J430 Body Wiring Harness
(5) J426 Body Wiring Harness
(6) X251 Body Wiring Harness to Auxiliary Heater and Air Conditioning Wiring Harness
(7) X602 Body Wiring Harness to Body Rear Wiring Harness Extension Harness
(8) X346 Body Wiring Harness to 3rd Row Seat Wiring Harness

Body Wiring Harness Routing - Luggage Compartment Right Side (SWB)

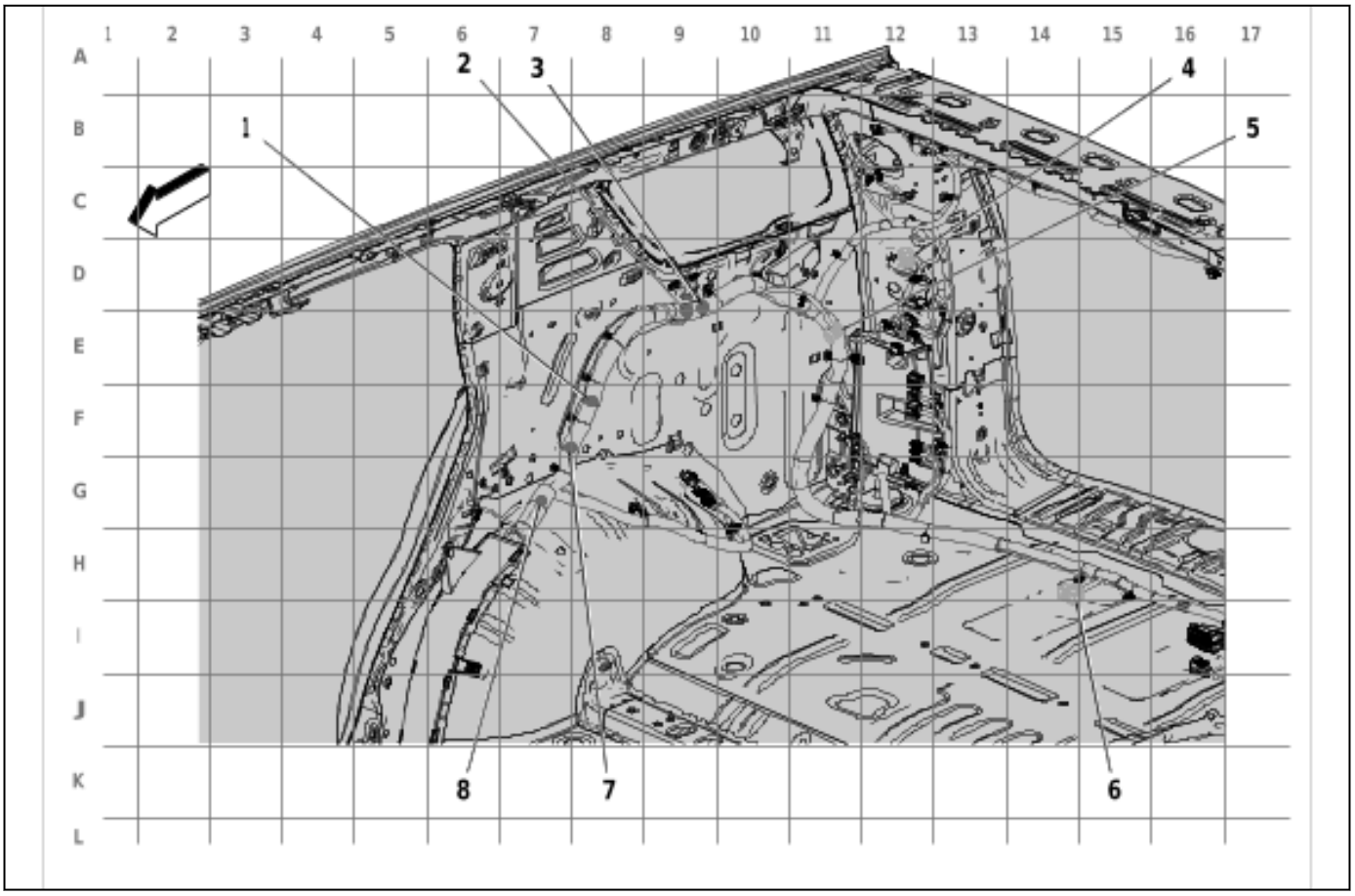

6685756

Items
(1) J402 Body Wiring Harness
(2) J443 Body Wiring Harness
(3) J430 Body Wiring Harness
(4) X602 Body Wiring Harness to Body Rear Wiring Harness Extension Harness
(5) X251 Body Wiring Harness to Auxiliary Heater and Air Conditioning Wiring Harness
(6) X346 Body Wiring Harness to 3rd Row Seat Wiring Harness
(7) J426 Body Wiring Harness
(8) J392 Body Wiring Harness

Chassis Rear Wiring Harness Extension Harness Routing

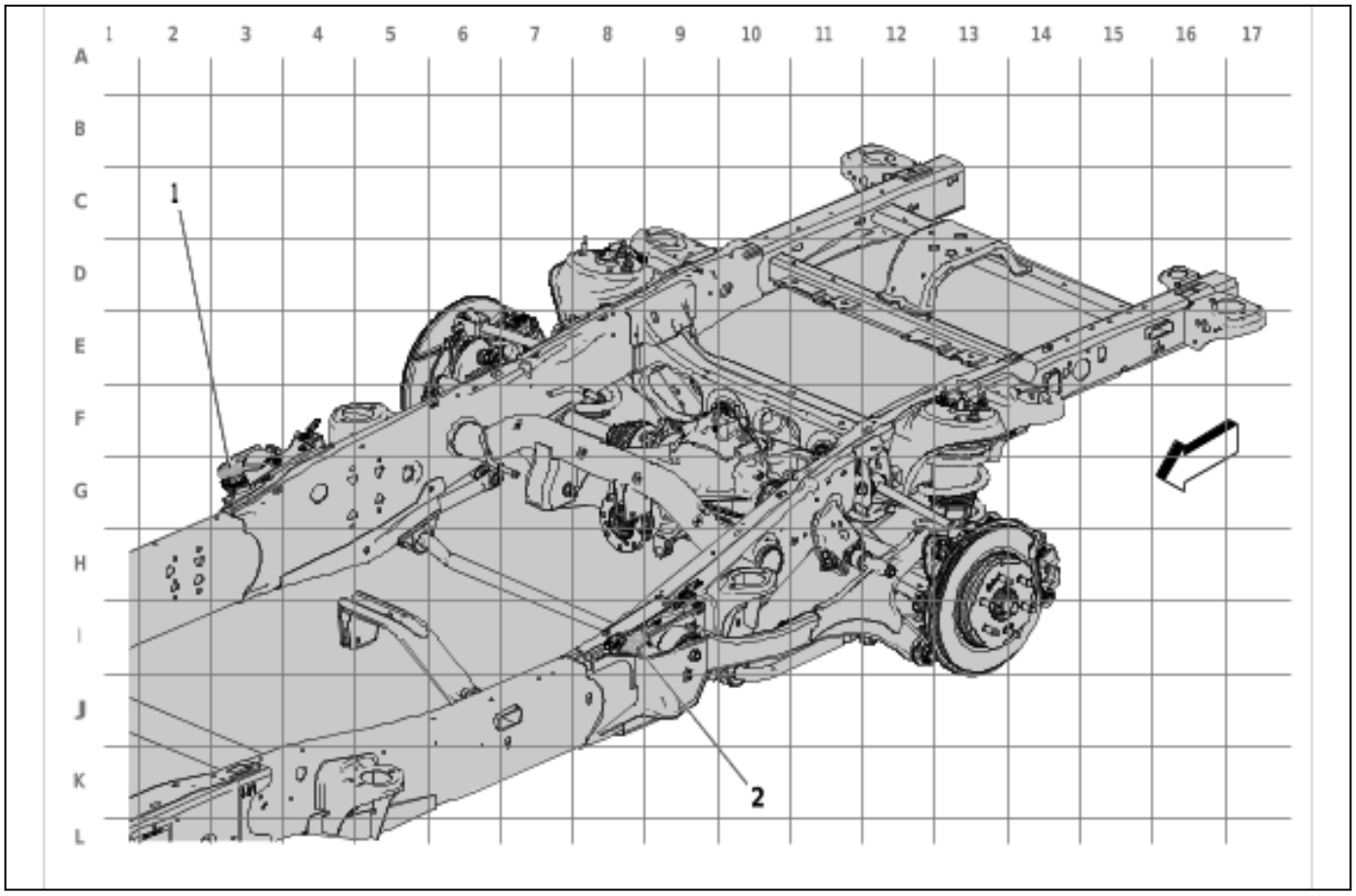

6677062

Items
(1) X904R Chassis Wiring Harness to Chassis Rear Wiring Harness Extension Harness - Right
(2) X904R3 Chassis Wiring Harness to Chassis Rear Wiring Harness Extension Harness - Right (Z95)
(3) X904L3 Chassis Wiring Harness to Chassis Rear Wiring Harness Extension Harness - Left (Z95)
(4) X904L Chassis Wiring Harness to Chassis Rear Wiring Harness Extension Harness - Left
(5) X904L2 Chassis Wiring Harness to Chassis Rear Wiring Harness Extension Harness - Left
(6) X904R2 Chassis Wiring Harness to Chassis Rear Wiring Harness Extension Harness - Right

Differential Carrier Lock Wiring Harness Routing (G96)

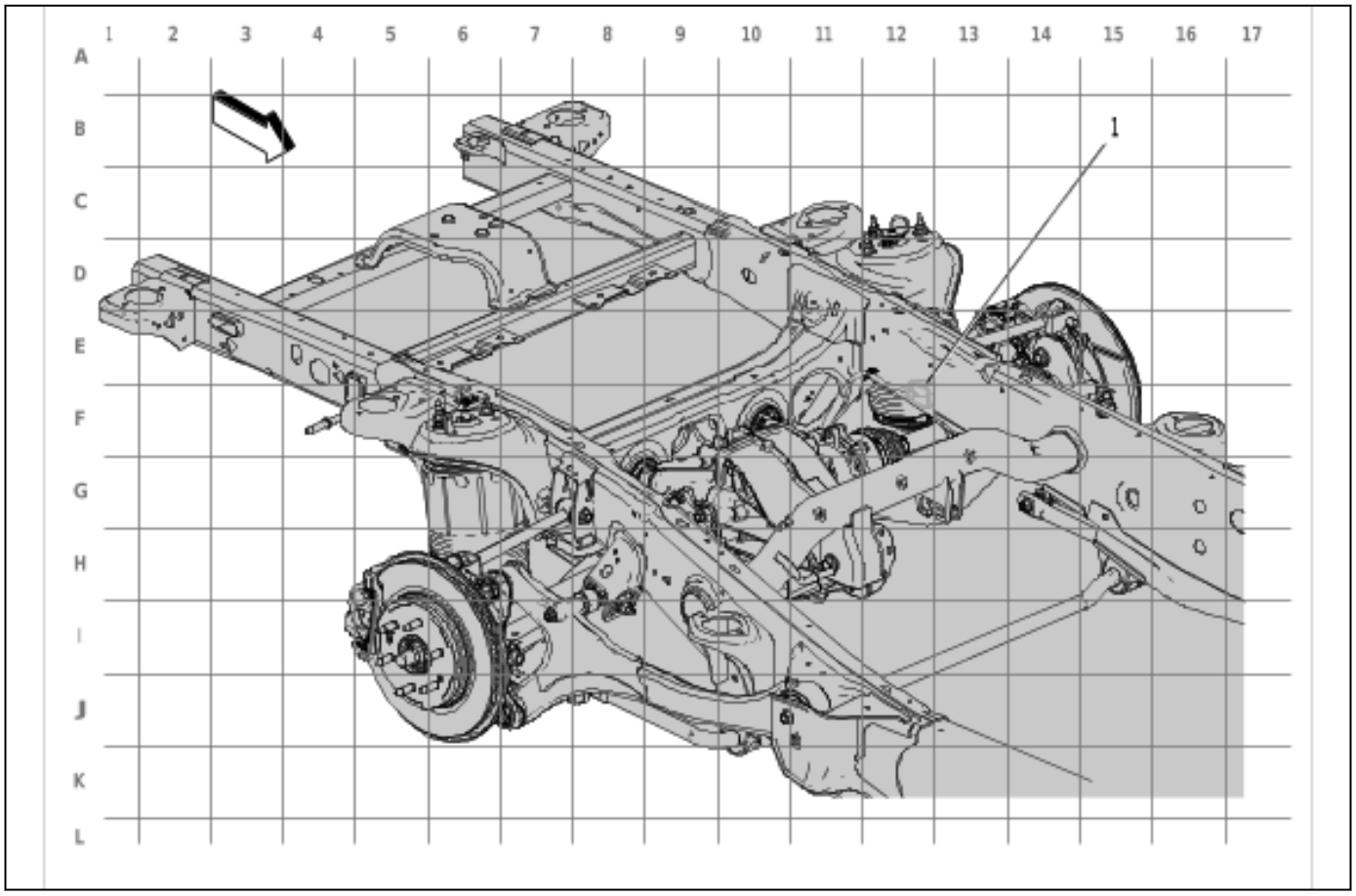

6678295

Items
(1) X415R Chassis Wiring Harness to Differential Carrier Lock Wiring Harness (G96)

Roof Wiring Harness Routing

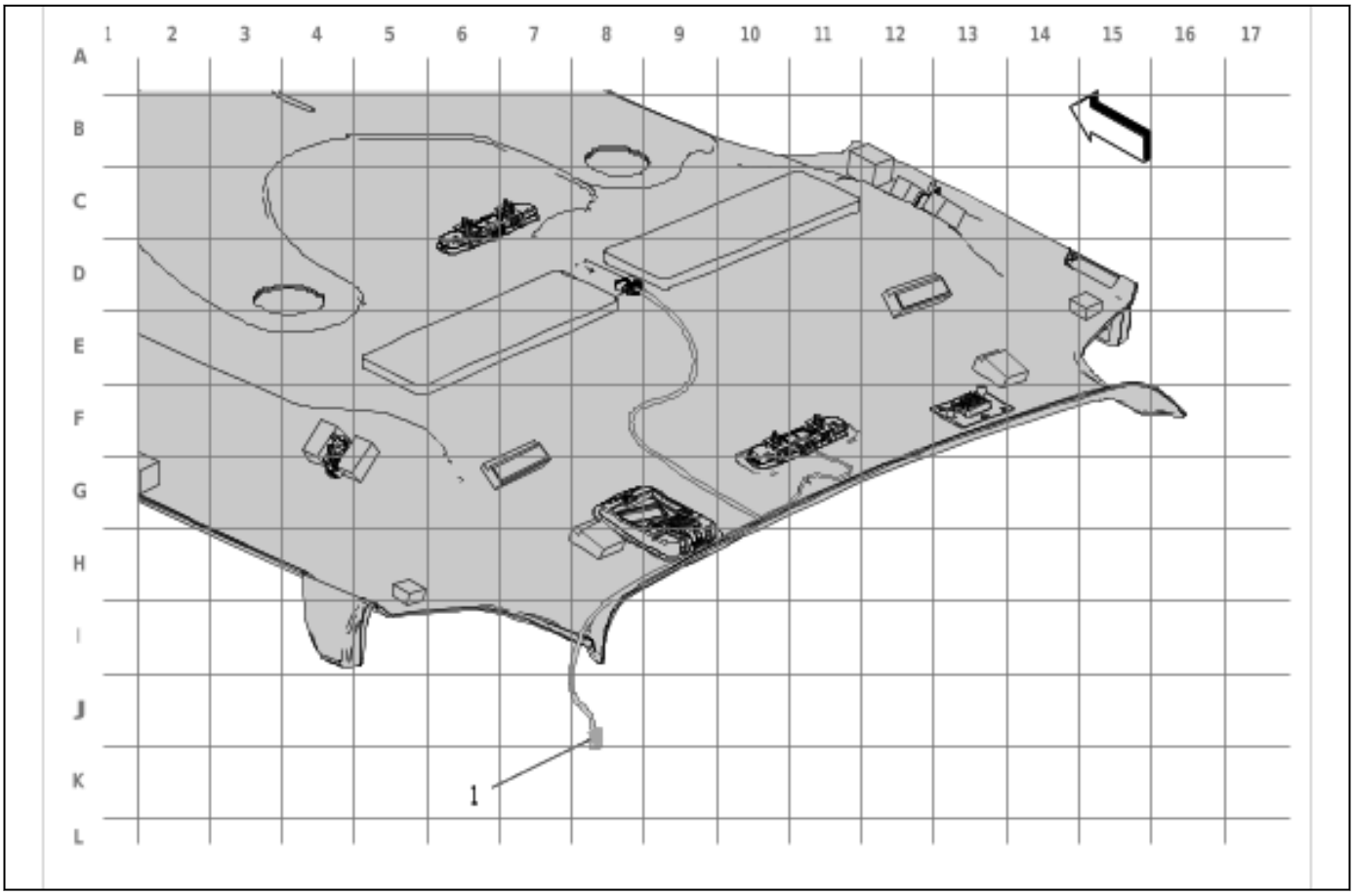

6676710

Items
(1) X960 Roof Wiring Harness to Body Wiring Harness

Body Wiring Harness Routing - Upper Luggage Compartment

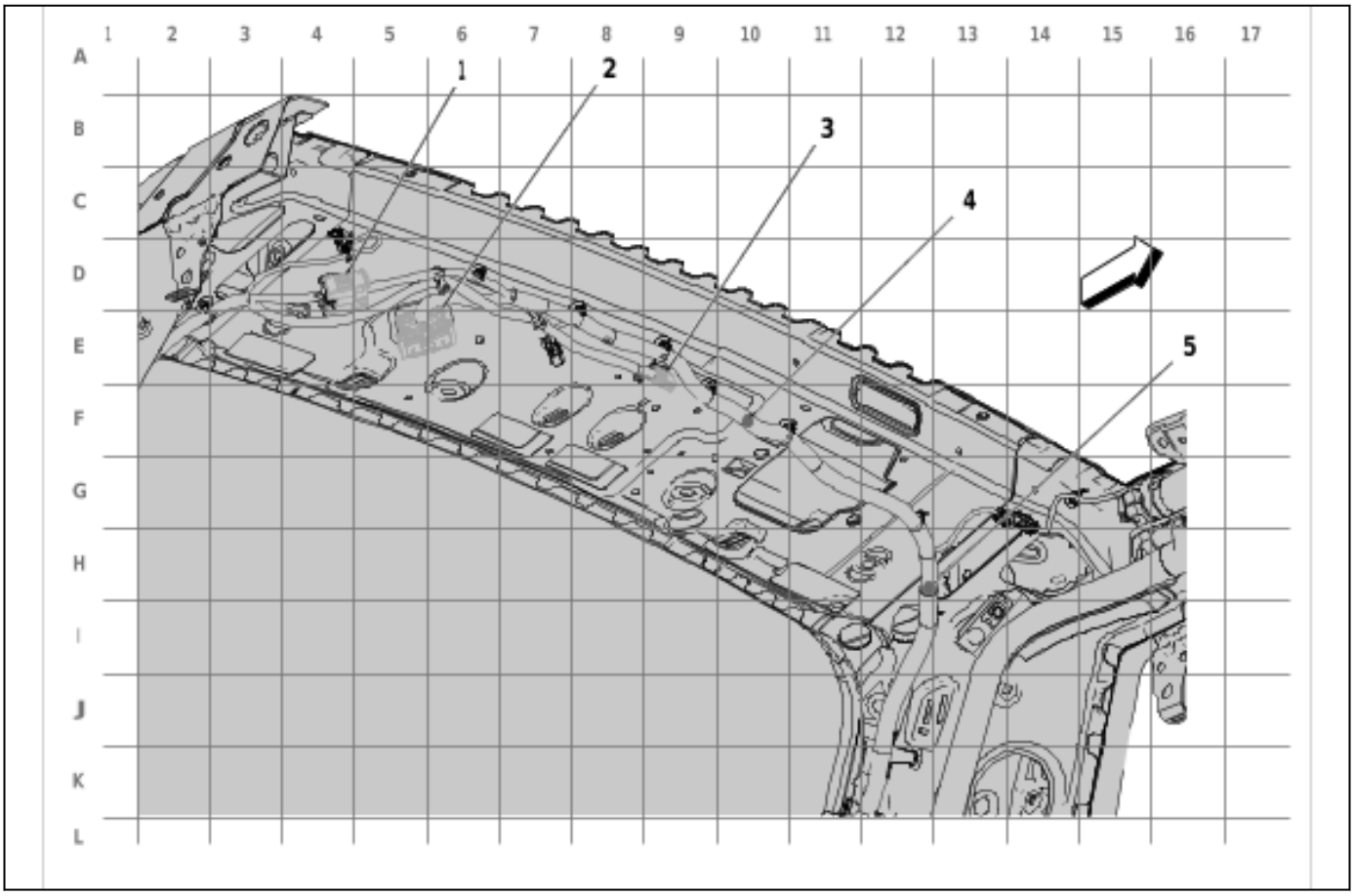

6685757

Items
(1) X309 Body Wiring Harness to Body Wiring Harness
(2) X905 Liftgate Wiring Harness to Body Wiring Harness
(3) X995R Body Wiring Harness to Rearview Driver Information Camera Rear Closure Coaxial Cable
(4) J410 Body Wiring Harness
(5) J460 Body Wiring Harness

Fuel Tank Filler Door Lock Release Wiring Harness Routing (N08)

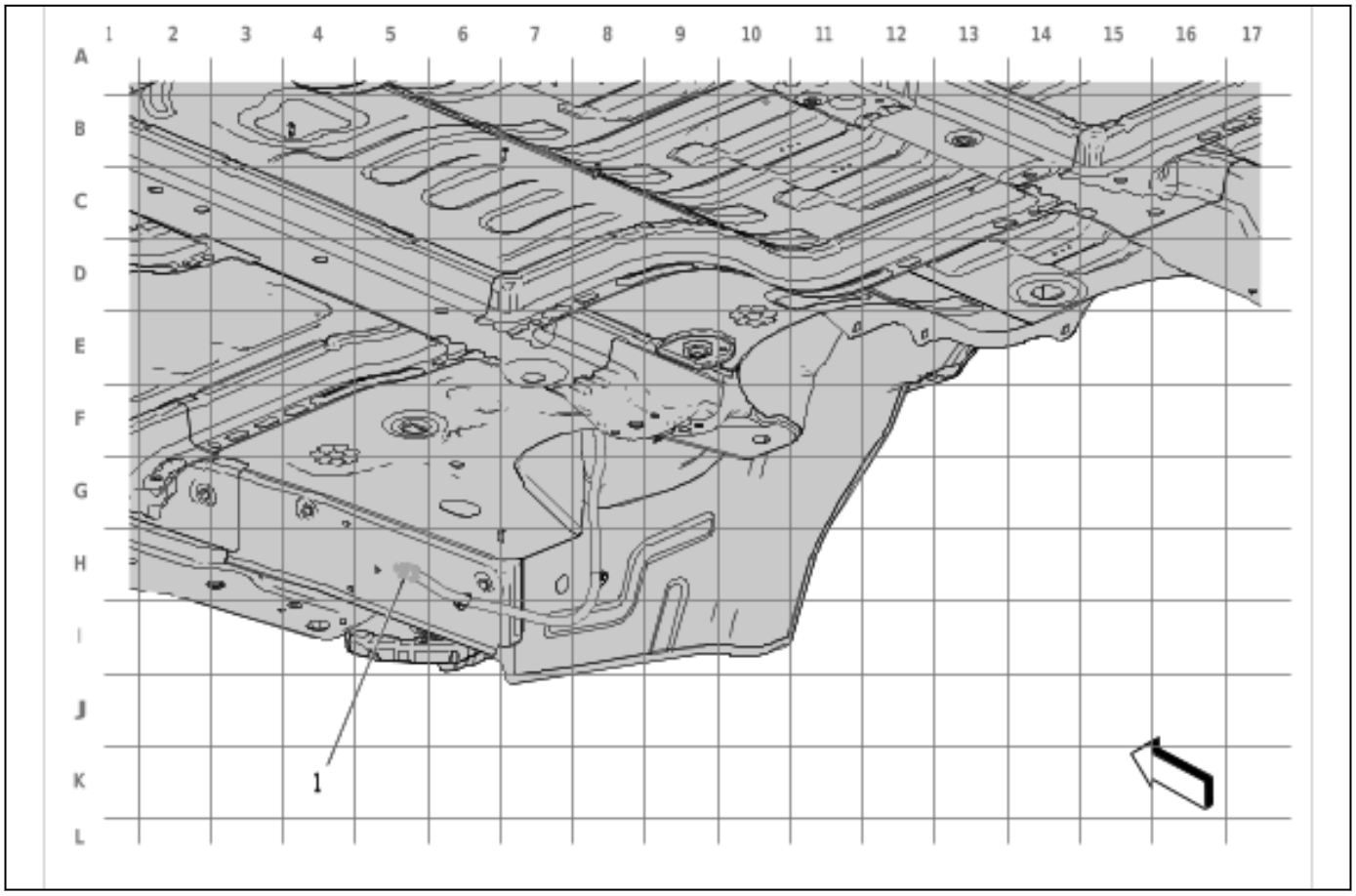

6686796

Items
(1) X353 Fuel Tank Filler Door Lock Release Wiring Harness to Body Wiring Harness (N08)

Body Wiring Harness Routing - Rear Underbody

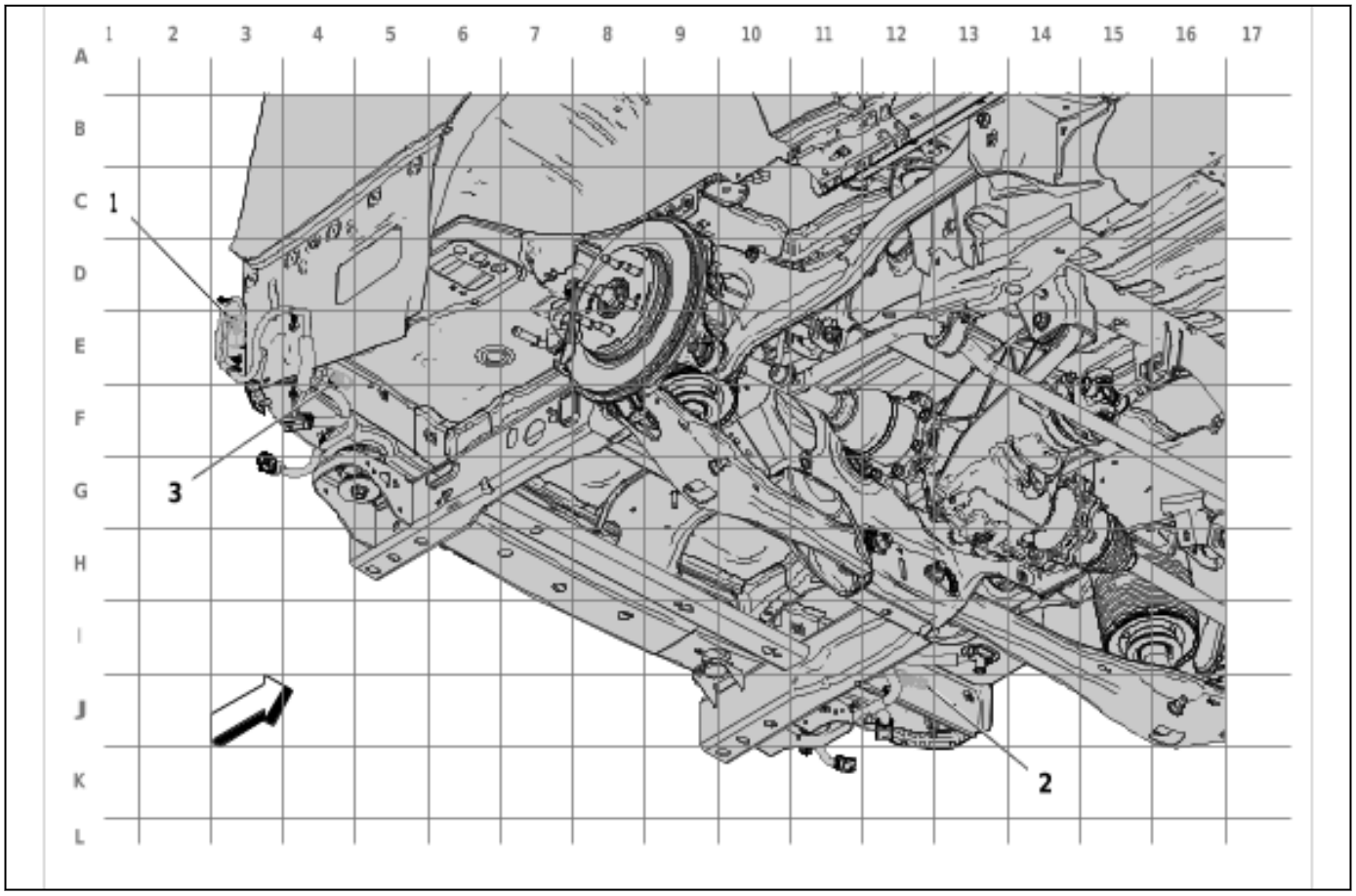

6685758

Items
(1) X953 Body Wiring Harness to Rear Object Alarm Sensor Wiring Harness
(2) X353 Fuel Tank Filler Door Lock Release Wiring Harness to Body Wiring Harness (N08)
(3) X402 Chassis Wiring Harness to Body Wiring Harness

Rearview Driver Information Camera Rear Closure Coaxial Cable Routing

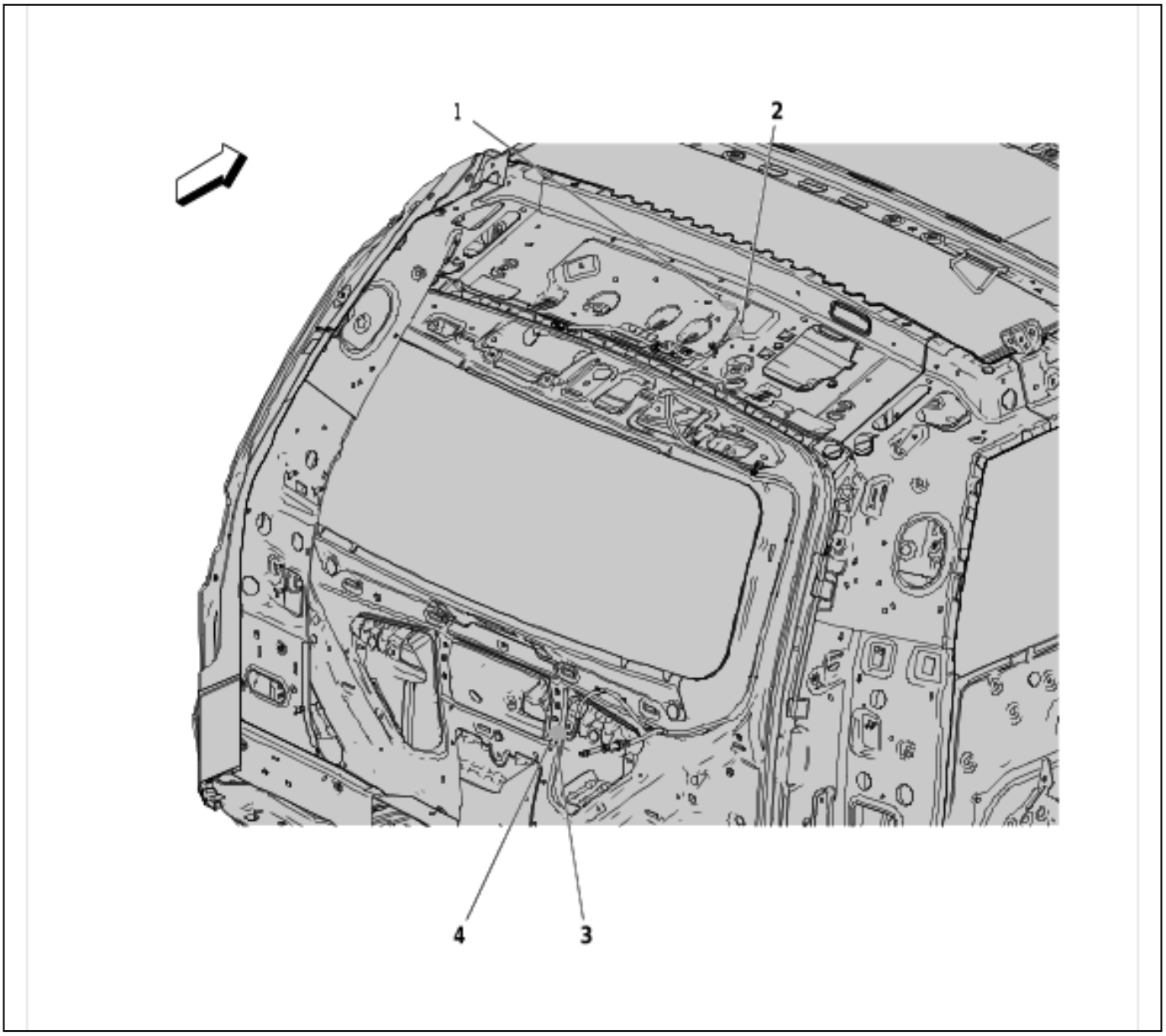

6678296

Items
(1) X995R Body Wiring Harness to Rearview Driver Information Camera Rear Closure Coaxial Cable
(2) X996 Antenna Coaxial Cable to Rearview Driver Information Camera Rear Closure Coaxial Cable (DRZ)
(3) X995D Rearview Driver Information Camera Rear Closure Coaxial Cable to Rear License Plate Lamp Wiring Harness (DRZ)
(4) X995S Antenna Coaxial Cable to Rear License Plate Lamp Wiring Harness (-DRZ)

Liftgate Wiring Harness Routing

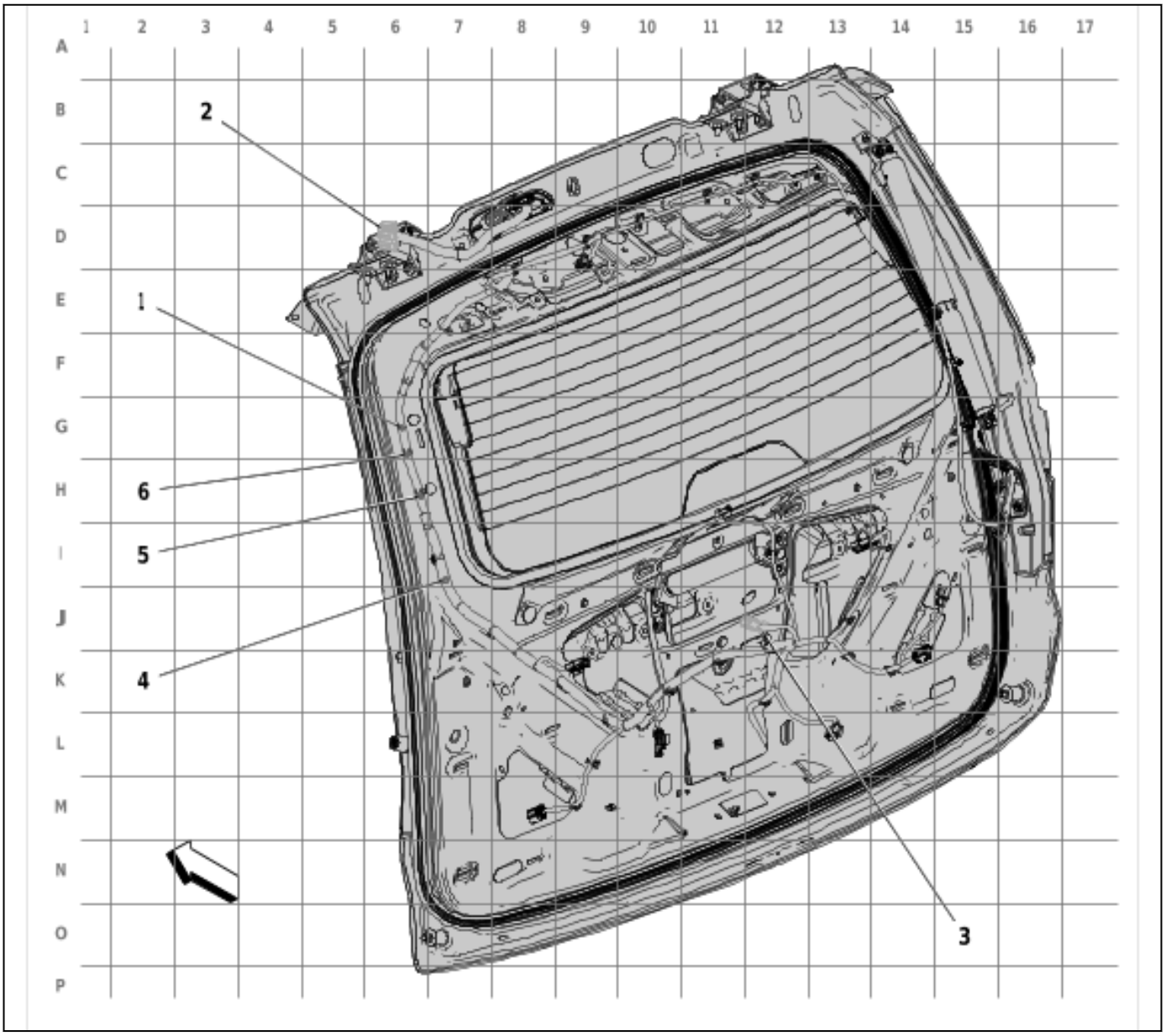

6678297

Items
(1) J904 Liftgate Wiring Harness
(2) X905 Liftgate Wiring Harness to Body Wiring Harness
(3) X907 Rear License Plate Lamp Wiring Harness to Liftgate Wiring Harness
(4) J903 Liftgate Wiring Harness (5W4 / 9C1)
(5) J902 Liftgate Wiring Harness (5W4 / 9C1)
(6) J901 Liftgate Wiring Harness

Rear License Plate Lamp Wiring Harness Routing

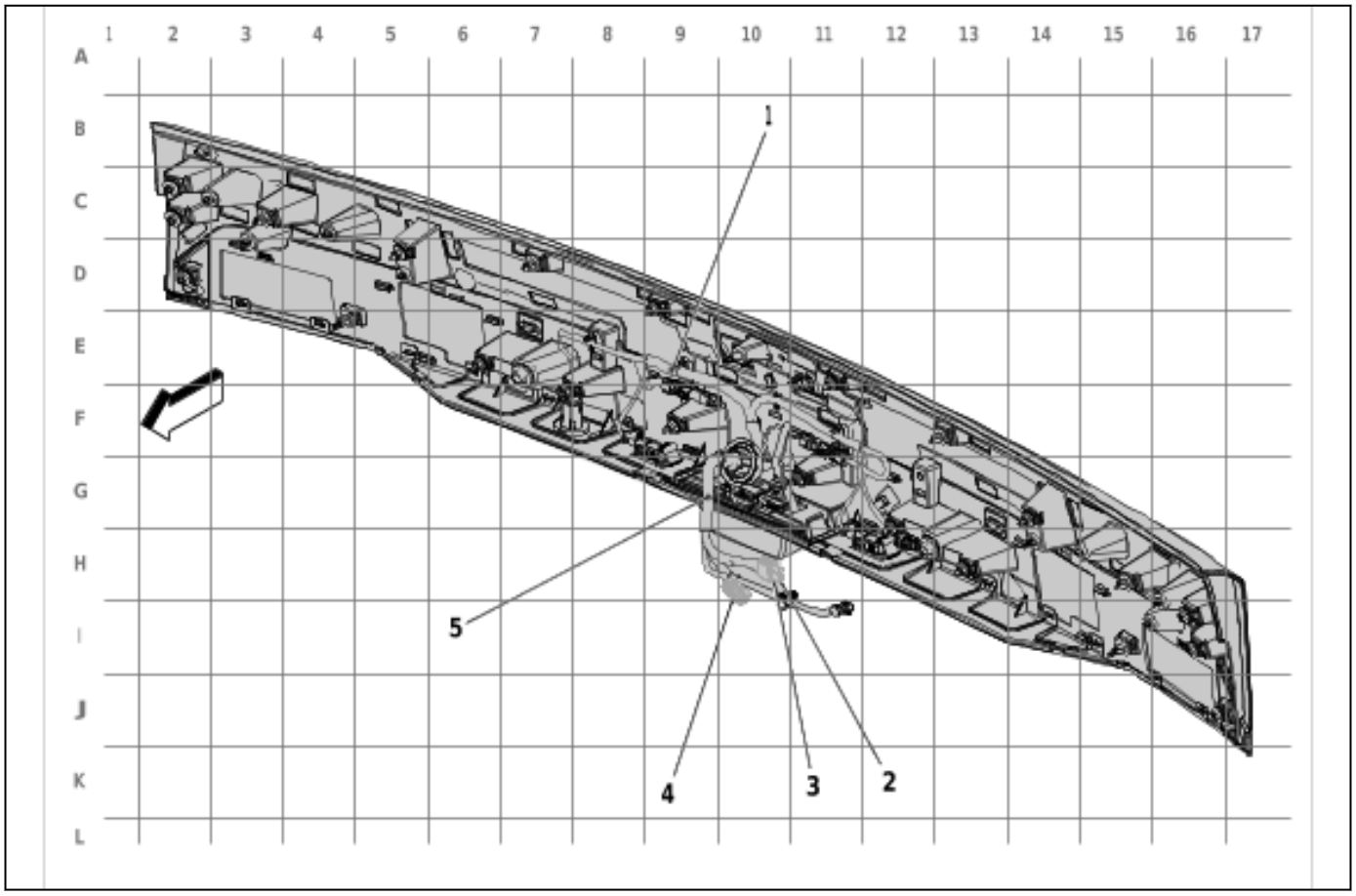

6666133

Items
(1) J911 Rear License Plate Lamp Wiring Harness
(2) X995D Rearview Driver Information Camera Rear Closure Coaxial Cable to Rear License Plate Lamp Wiring Harness (DRZ)
(3) X995S Antenna Coaxial Cable to Rear License Plate Lamp Wiring Harness (-DRZ)
(4) X907 Rear License Plate Lamp Wiring Harness to Liftgate Wiring Harness
(5) J934 Rear License Plate Lamp Wiring Harness

Rear Object Alarm Sensor Wiring Harness Routing

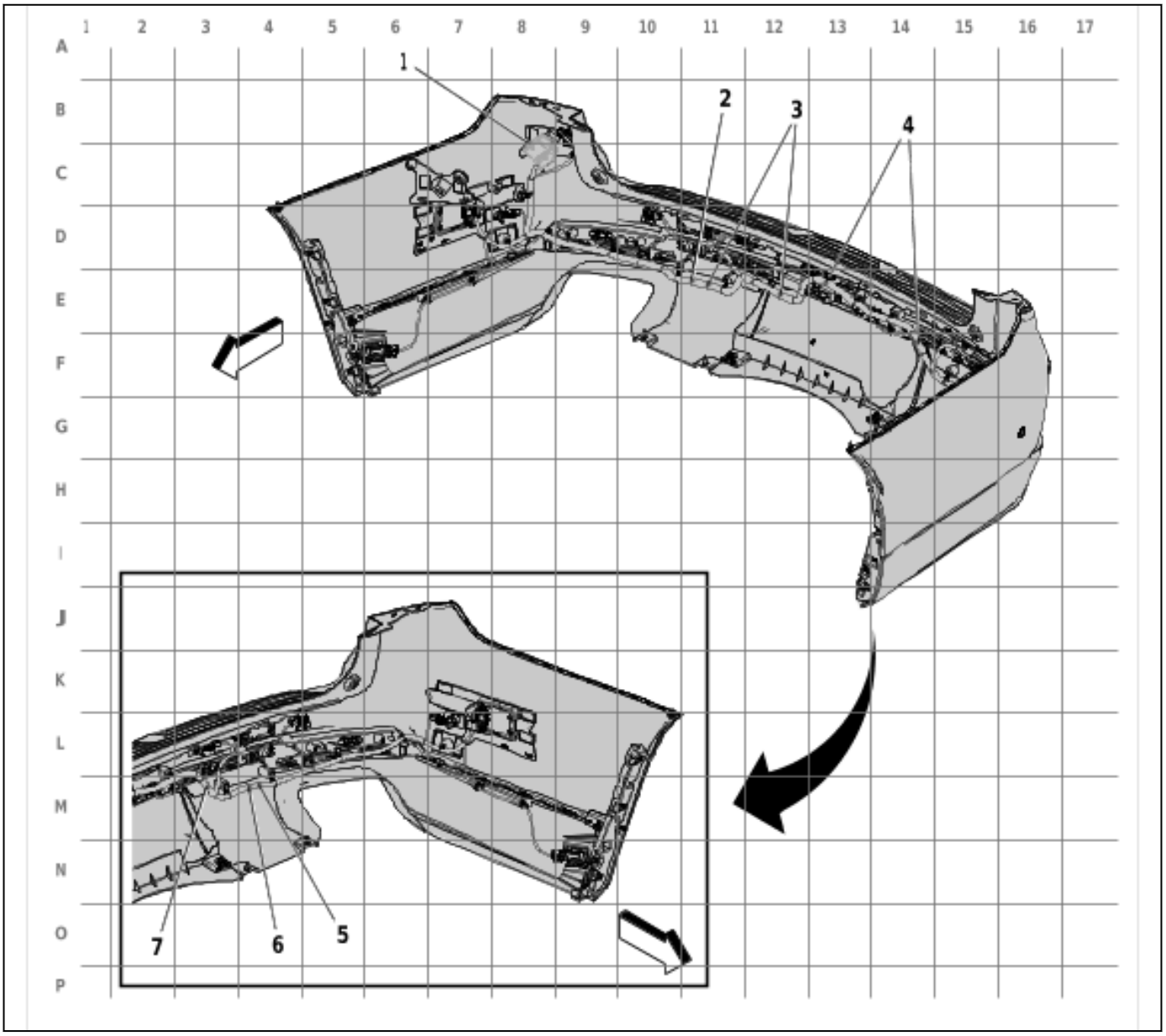

6666260

Items
(1) X953 Body Wiring Harness to Rear Object Alarm Sensor Wiring Harness
(2) J425 Rear Object Alarm Sensor Wiring Harness
(3) J427 Rear Object Alarm Sensor Wiring Harness
(4) J431 Rear Object Alarm Sensor Wiring Harness
(5) J429 Rear Object Alarm Sensor Wiring Harness
(6) J442 Rear Object Alarm Sensor Wiring Harness
(7) J428 Rear Object Alarm Sensor Wiring Harness

Power Outlets

Schematic and Routing Diagrams

Cigar Lighter/Power Outlet Schematics (USB Charge Receptacles)

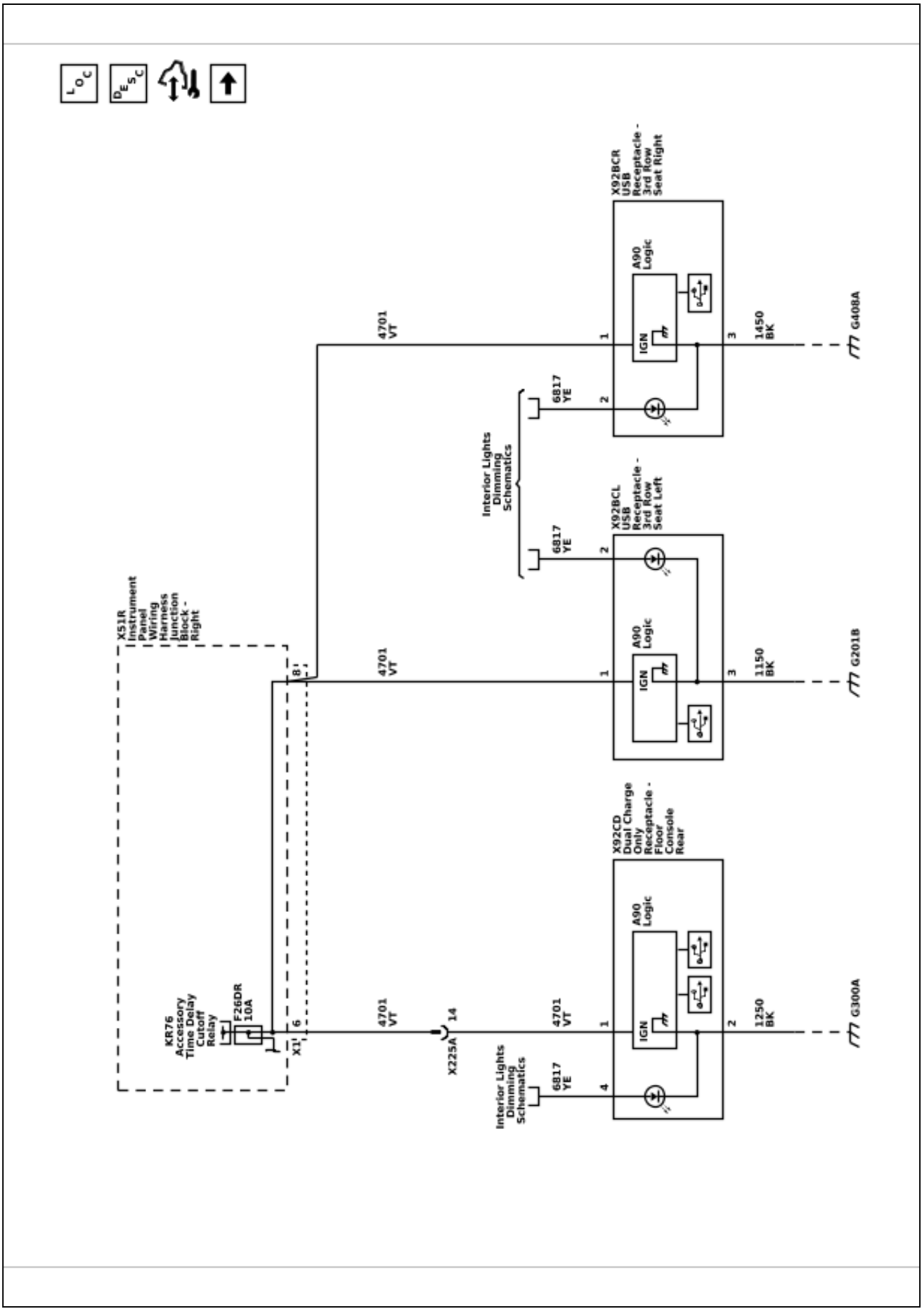

6613435

Cigar Lighter/Power Outlet Schematics (Inverter Module Power, Ground, Serial Data, and Controls (KI4 / KI5))

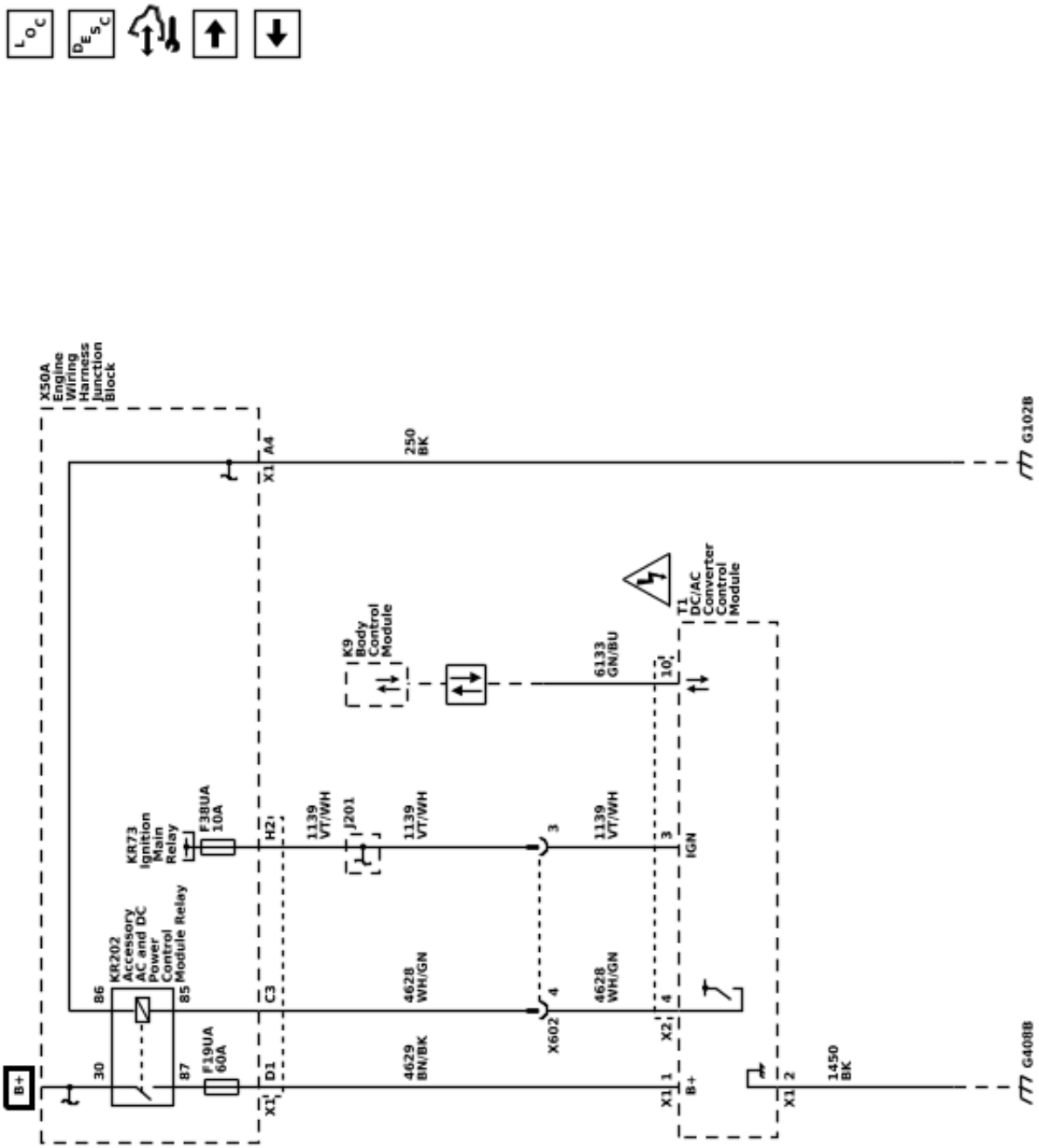

6613437

Cigar Lighter/Power Outlet Schematics (110V AC Accessory Power Receptacles (KI4))

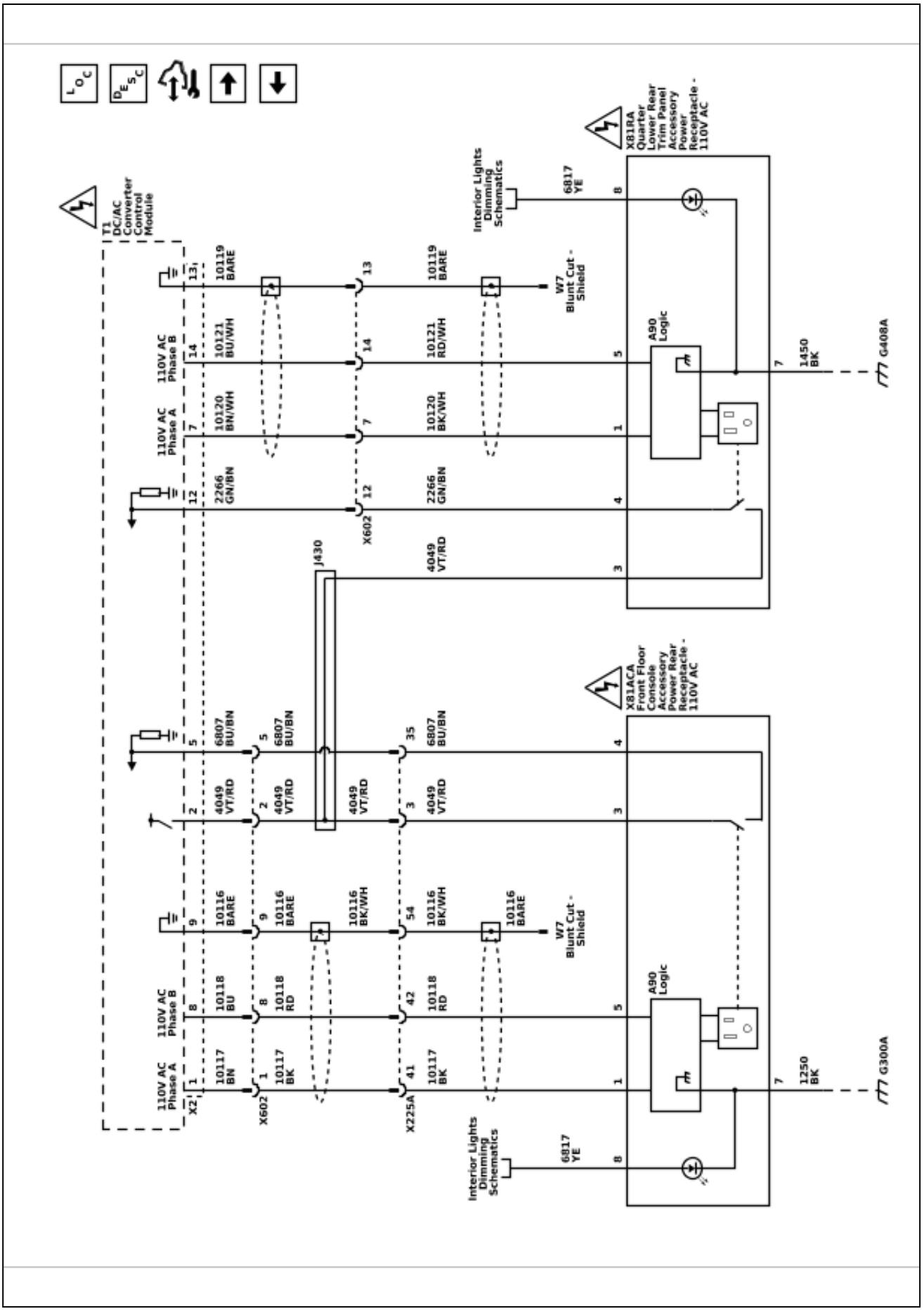

Cigar Lighter/Power Outlet Schematics (220V AC Accessory Power Receptacles (KI5))

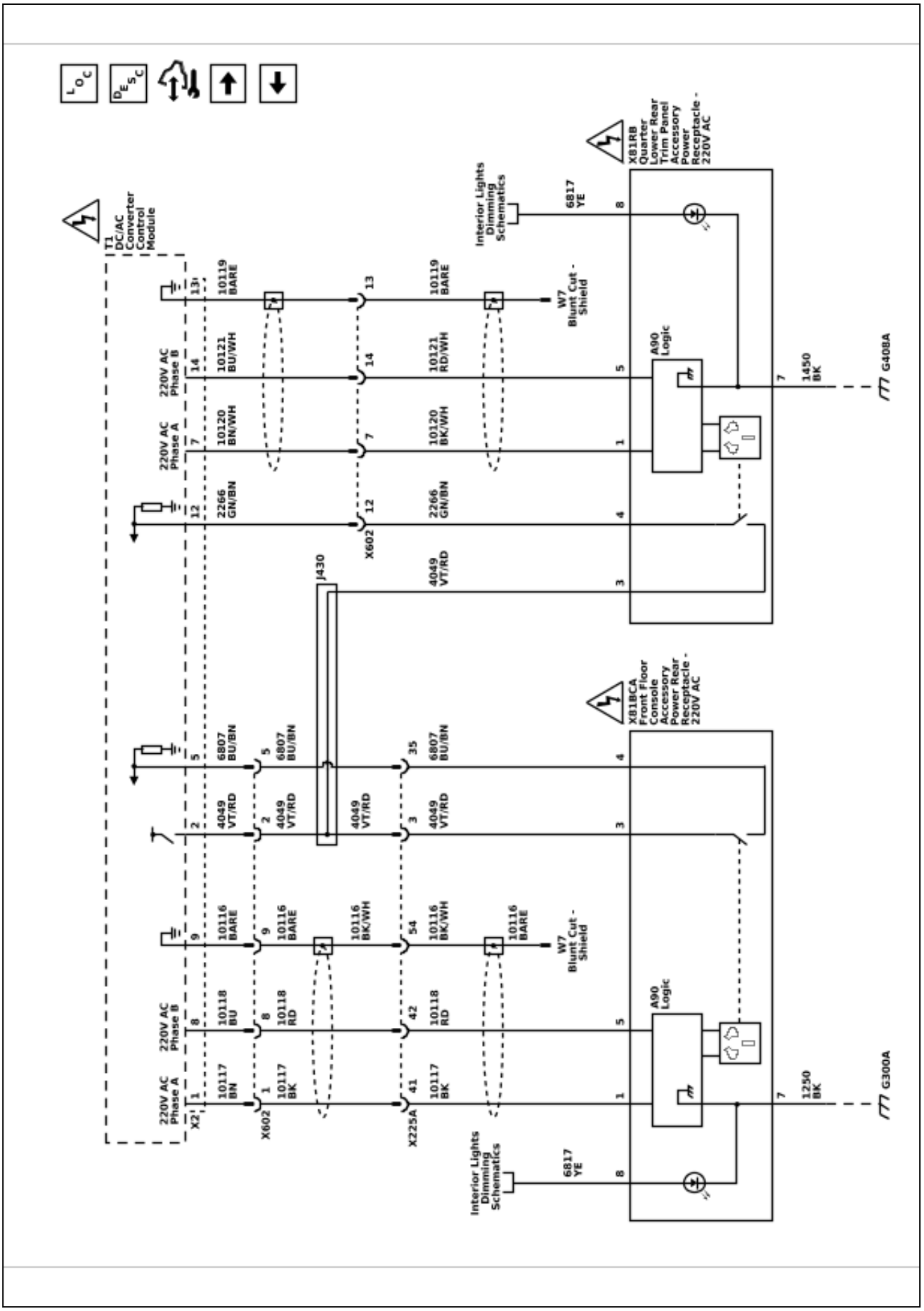

6613440

Cigar Lighter/Power Outlet Schematics (Wireless Charging (K7A))

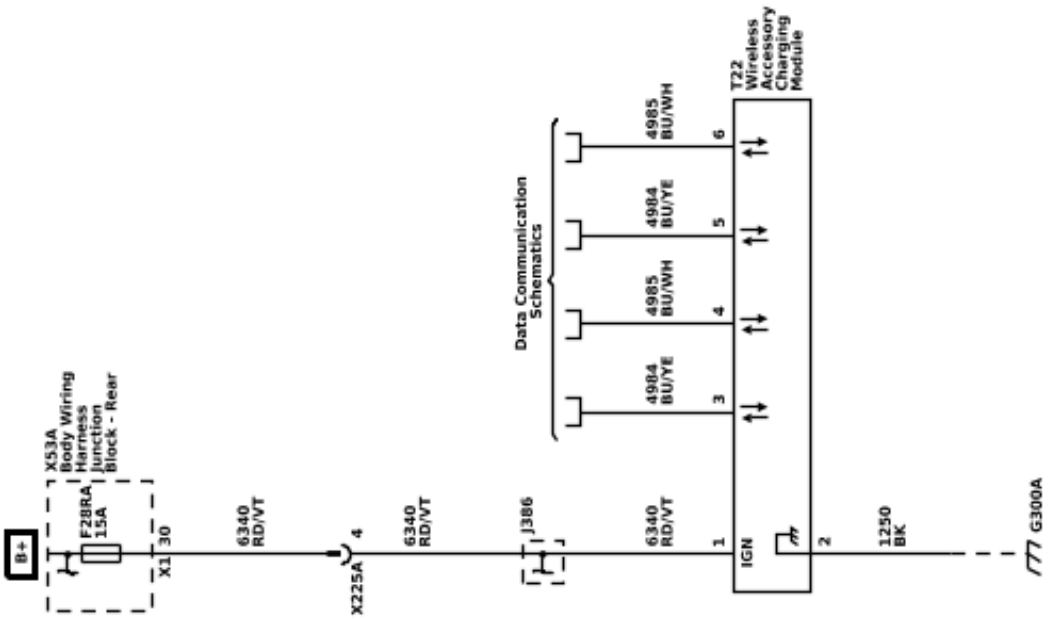

Description and Operation

Mobile Device Wireless Charger Description and Operation

Mobile Device Wireless Charging System

The Mobile Device Wireless Charging System (WCS) is an system for wirelessly charging mobile devices. It is capable of charging the batteries of compatible mobile devices. A compatible device is one that is compliant with Power Matters Alliance (PMA), Wireless Power Consortium (WPC) Standard, or Alliance for Wireless Power (A4WP), meaning that it is equipped with a PMA, WPC, or A4WP wireless charge “receiver” that will work with the charge “transmitter” installed in the vehicle. The devices may utilize built-in charging circuitry or an adapter (external plug-in device which contains the charging circuitry). To check for phone or other device compatibility, refer to GM Total Connect.

Warning: Remove all objects from the charging pad before charging your mobile device. Objects, such as coins, keys, rings, paper clips, or cards, between the phone and charging pad will become very hot. On the rare occasion that the charging system does not detect an object, and the object gets wedged between the phone and charger, remove the phone and allow the object to cool before removing it from the charging pad, to prevent burns.

Charging

To charge a device, place it on the charging surface in the vehicle. There is a charging coil located in the center of the charging surface. The device has a charging coil typically near the center of the device. These coils must be lined up in order for charging to proceed. When the interruptible retained accessory power (IRAP) relay is closed (this is true typically when vehicle ignition is in Run or Accessory position), the WCS will detect the device, establish communications with the device to confirm it is a compatible device, and then deliver charging power to the device via wireless interface. The WCS will be able to deliver 5W to 15W of power as requested by the compatible device. It shall only enter a charging state if communication is established and a compatible device is identified.

The WCS shall not enter a charging state if there is no communication established with a compatible device. Due to differences in objects, a foreign object detection protocol is employed to detect a non-compliant device and hold power transfer initiation until the non-compliant object has been removed and a compliant object has been detected. The charger monitors its internal temperature and will shut down if the charger temperature exceeds 185F (85C).

Indicator

The K9 Body Control Module will detect the device battery is charging and send a serial data message on the GMLAN bus to the radio display. The radio display will indicate a device is currently charging by displaying a lightning bolt over the phone icon. When the indicator is toggling on and off this indicates a thermal limit has been reached and the device will not charge. For more information refer to the owners manual.

Cooling

The wireless charger is kept cool using the HVAC system. There is a dedicated HVAC duct that connects to the Wireless Charging Module bracket (which holds the module and the mat).

Power Outlets Description and Operation

12 Volt Power Outlet Receptacle Description and Operation

The 12 V accessory power receptacles are supplied with power by the accessory relay.

The vehicle is fitted with a cigarette lighter and/or with a 12 V accessory power receptacle. The cigarette lighter and accessory power outlets are controlled by an ignition operated relay. The accessory power receptacle and cigarette lighter are operational when the ignition is turned to either the On or the Accessories positions. To operate the cigarette lighter, press in the lighter knob. When the element is hot, the lighter automatically pops out and is ready for use.

110 Volt Power Outlet Receptacle System Description

Power Outlets Block Diagram

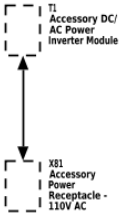

3403851

Hard-Wired

T1 Accessory DC/AC Power Inverter Module

X81 Accessory Power Receptacle - 110V AC

The alternating current (AC) accessory power outlet system consists of the accessory DC/AC power inverter module and the accessory power receptacle – 110 V AC. The accessory DC/AC power inverter module converts 12 V direct current (DC) battery power to 110 V at 60 Hertz (Hz) AC power to operate AC powered devices. The accessory DC/AC power inverter module provides up to 400 watts of power. The accessory power receptacle – 110 V AC provides the usual connection for AC powered devices.

110 Volt Power Outlet Receptacle System Operation

The accessory DC/AC power inverter module receives fuse protected battery voltage and is connected to the 12 V electrical system ground. The accessory power receptacle – 110 V AC has an internal switch, that detects when an AC powered device is plugged into the outlet, and an Accessory Power Switch located on the S86 Vehicle Stability Control System Switch. When the ignition is ON, the Accessory Power Switch is ON, and an AC powered device is plugged into the accessory power receptacle – 110 V AC, the normally open switch in the accessory power receptacle – 110 V AC, closes. When the accessory DC/AC power inverter module detects the voltage from the accessory power receptacle – 110 V AC switch, the inverter module begins to supply 110 V AC to the accessory power receptacle – 110 V AC after a 1.5 s delay. The accessory AC power system is protected against circuit overload and circuit shorts to ground.

110 Volt Power Outlet Receptacle Isolation Fault Protection

The accessory DC/AC power inverter module contains a ground fault circuit interrupter (GFCI). GFCI monitors the 110 V circuit for a short to vehicle chassis ground. If a 110 V AC short to ground is detected, the accessory DC/AC power inverter module will turn OFF. The module remains OFF, until the AC powered device is unplugged from the outlet, and then plugged into the outlet after a 3 s delay.

110 Volt Power Outlet Receptacle Overload Shutdown

The accessory DC/AC power inverter module will turn OFF if the current in the 110 V circuit is greater than 3.8 A for 1 s , or 2.5 A for 10 s . The module will turn ON again, when the AC powered device is unplugged from the outlet, and then plugged into the outlet after a 3 s delay.

110 Volt Power Outlet Receptacle Internal Shutdown

The accessory DC/AC power inverter module will turn OFF if the B+ supply voltage is greater than 16.5 V or less than 11 V. The module will also turn OFF if the device temperature is greater than 85°C (185°F). The module will turn ON again, after the shutdown condition is corrected, and the AC powered device is unplugged from the outlet, and then plugged into the outlet.

230 Volt Power Outlet Receptacle System Description

Power Outlets Block Diagram

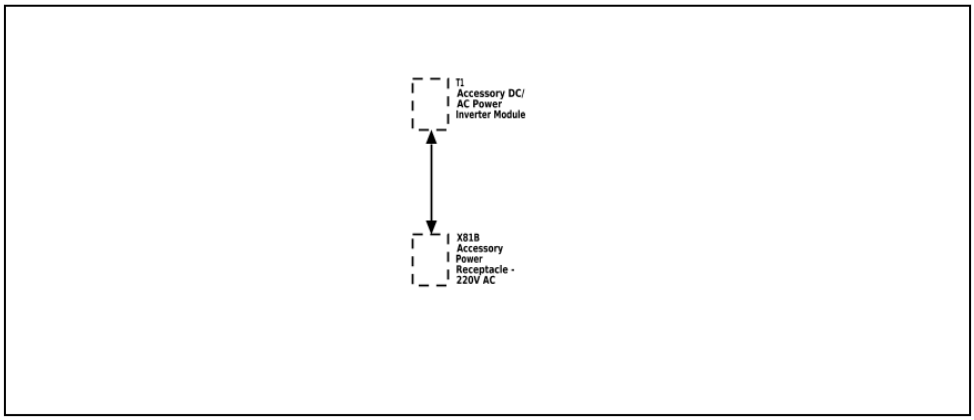

3403853

Hard-Wired

T1 Accessory DC/AC Power Inverter Module

X81B Accessory Power Receptacle - 220V AC

The alternating current (AC) accessory power outlet system consists of the accessory DC/AC power inverter module and the accessory power receptacle – 220V AC. The accessory DC/AC power inverter module converts 12 V direct current (DC) battery power to 220–230 V at 50 Hertz (Hz) AC power to operate AC powered devices. The accessory DC/AC power inverter module provides up to 400 watts of power. The accessory power receptacle – 220V AC provides the usual connection for AC powered devices.

230 Volt Power Outlet Receptacle System Operation

The accessory DC/AC power inverter module receives fuse protected battery voltage and is connected to the 12 V electrical system ground. The accessory power receptacle – 220 V AC has an internal switch, that detects when an AC powered device is plugged into the outlet, and an Accessory Power Switch located on the S86 Vehicle Stability Control System Switch. When the ignition is ON, the Accessory Power Switch is ON, and an AC powered device is plugged into the accessory power receptacle – 220 V AC, the normally open switch in the accessory power receptacle – 220 V AC, closes. When the accessory DC/AC power inverter module detects the voltage from the accessory power receptacle – 220 V AC switch, the inverter module begins to supply 220 V AC to the accessory power receptacle – 220 V AC after a 1.5 s delay. The

accessory AC power system is protected against circuit overload and circuit shorts to ground.

230 Volt Power Outlet Receptacle Isolation Fault Protection

The accessory DC/AC power inverter module contains a ground fault circuit interrupter (GFCI). GFCI monitors the 230 V circuit for a short to vehicle chassis ground. If a 230 V AC short to ground is detected, the accessory DC/AC power inverter module will turn OFF. The module remains OFF, until the AC powered device is unplugged from the outlet, and then plugged into the outlet after a 3 s delay.

230 Volt Power Outlet Receptacle Overload Shutdown

The accessory AC/DC power control module will turn OFF if the current in the 230 V circuit is greater than 3.8 A for 1 second, or 2.5 A for 10 seconds. The module will turn ON again, when the AC powered device is unplugged from the outlet, and then plugged into the outlet after a 3 second delay.

230 Volt Power Outlet Receptacle Internal Shutdown

The accessory DC/AC power inverter module will turn OFF if the B+ supply voltage is greater than 16.5 V or less than 11 V. The module will also turn OFF if the device temperature is greater than 85°C (185°F). The module will turn ON again, after the shutdown condition is corrected, and the AC powered device is unplugged from the accessory power receptacle – 220V AC, and then plugged into the accessory power receptacle – 220V AC.

USB Receptacle Description and Operation (USS)

The vehicle is fitted with USB charge port receptacles at the rear of the floor console. These USB receptacles are for charging devices only. The USB receptacles are controlled by an ignition operated relay and are operational when the ignition is turned to either the On or the Accessories positions.

Wiring Systems and Power Management

Schematic and Routing Diagrams

How to Use Electrical Schematics

Information Overview

The following explains some of the key parts of the GM wiring diagrams. Included are:

- Color Abbreviations
- Electronic Delivery Navigation Features

Color Abbreviations

The following sequence is used when depicting wire colors:

1. Color modifier of the wire, such as light or dark (if applicable)
2. Primary color of the wire
3. Secondary color of the wire (tracer/stripe)

Wire insulation and connector body colors in schematic information are abbreviated with a two character code as listed below.

Abbreviation	Color	Abbreviation	Color
AM	Amber	OG	Orange
BARE	Bare	PK	Pink
BG	Beige	PU	Purple
BK	Black	RD	Red
BN	Brown	RU	Rust
BU	Blue	SR	Silver
CL	Clear	TL	Teal
CR	Cream	TN	Tan
CU	Curry	TQ	Turquoise
GD	Gold	VT	Violet
GN	Green	WH	White
GY	Gray	YE	Yellow
NA	Natural	—	—
Color Modifiers			
L	Light	D	Dark

Additionally, industry standard cable types are not identified by color, but are listed by cable type as follows:

Abbreviation	Cable Type
COAX	Coax Cable
ENET	Ethernet
FW	Flat Wire
HDMI	High Definition Multimedia Interface
LVDS	Low-voltage Differential Signaling
TWINAX	Twinax Cable
USB	Universal Serial Bus

Electronic Delivery Navigation Features

The schematics information has been enhanced for electronic delivery and the following explains the features that are now available.

The enhanced features are categorized into three types:

- Mouse-overs, which are active when the mouse pointer is placed over the activated area

- Hotspots (links to other information), which are active by placing the mouse pointer over the activated area and clicking the left mouse button
- Hotspot Target Highlighting, which is when linking from one graphic to another graphic, the point of interest will be highlighted in red. This feature is available only when linking from a schematic graphic to a component locator/harness routing view, or when linking from a schematic to an electrical center identification view

Depending on the amount of information that is linked to from a hotspot, the mouse pointer changes shape.

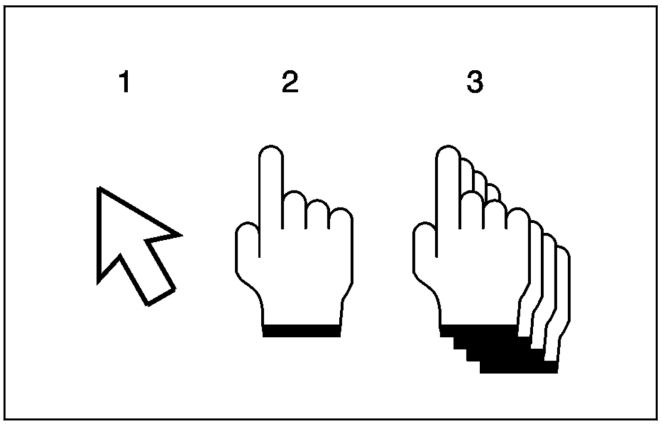

3819127

1. Basic mouse pointer – this means there are no hotspots available, but there may be a mouse-over available.
2. Single hand pointer – this means there is a mouse-over and hotspot link to a single document. Clicking on these areas will automatically take you to the target link.
3. Multiple hand pointer – this means there is a mouse-over and hotspot link to a multiple document. Clicking on these areas will bring up a pop-up menu that will display all available links. You may then select one of the available links clicking on one of the displayed links.

To see which areas of the schematic information have an available hotspot and/or a mouse-over, select and hold down the highlight hotspots button of the cgm viewer. This will highlight all areas of the graphic that have an available hotspot and/or a mouse-over in red. Once the button is released, the areas of the graphic will no longer be highlighted.

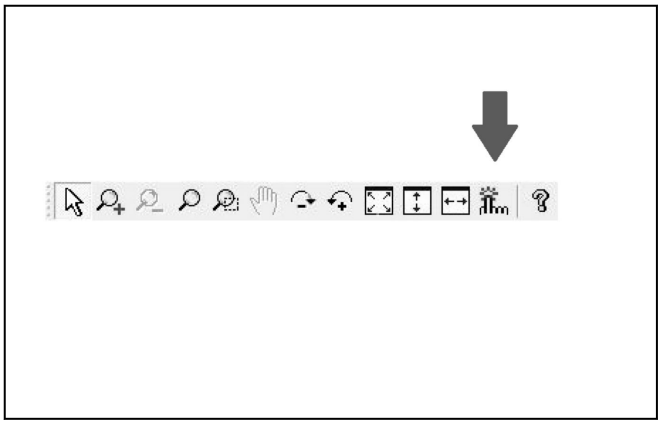

3819130

Each type of schematic related information has some level of these features. The schematic related information consists of the following information types:

- Schematics
- Connector End Views
- Component Locator Views
- Harness Routing Views
- Electrical Center Identification Views
- Master Electrical Component List
- Master Electrical Schematic Icons
- Schematics RPO Code List
- Circuit Number/Wire Colors
- Wire Lines
- Connector Cavities

Schematics

An electrical schematic hotspot is an activated icon or area in the schematic that can be cursor selected to link to additional information. Additionally, each of the hotspots in schematics has a mouse-over.

Hotspots in schematics are categorized into three types:

- Schematic Navigational Icon Hotspots
- Schematic Informational Icon Hotspots
- Schematic Navigational Hotspots

Schematic Navigational Icon Hotspots

The following lists icons that may appear on the upper right corner of a schematic that have an available mouse-over and hotspot.

Icon	Mouse-Over	Hotspot Link to Information
1990537	Master Electrical Component List	Links to the vehicle Master Electrical Component List that shows all electrical components and harness items on the vehicle and has links to any available views
1990538	Title of the subsystem description and operation	Links to the System Description and Operation
1988674	Control Module References	Links to the Control Module References table

Icon	Mouse-Over	Hotspot Link to Information
1990541	Title of the next schematic page	Links to the next schematic of the subsystem schematics
1990542	Title of the previous schematic page	Links to the previous schematic of the subsystem schematics

Schematic Informational Icon Hotspots

The following lists the icons that may appear anywhere on a schematic that have an available mouse-over and hotspot.

Icon	Mouse-Over	Hotspot Link to Information
Danger 1988672	Master Electrical Schematic Icons	Links to the vehicle Master Electrical Schematic Icons list that describes the message for the icon.
High Voltage 1988673	Master Electrical Schematic Icons	Links to the vehicle Master Electrical Schematic Icons list that describes the message for the icon.
Caution 1990543	Master Electrical Schematic Icons	Links to the vehicle Master Electrical Schematic Icons list that describes the message for the icon.
Supplemental Restraint 1988667	Master Electrical Schematic Icons	Links to the vehicle Master Electrical Schematic Icons list that describes the message for the icon.

Icon	Mouse-Over	Hotspot Link to Information
Pedestrian Impact 3814889	Master Electrical Schematic Icons	Links to the vehicle Master Electrical Schematic Icons list that describes the message for the icon.
Additional Information 1988670	Master Electrical Schematic Icons	Links to the vehicle Master Electrical Schematic Icons list that describes the message for the icon.

Schematic Navigational Hotspots

In addition to the navigational icons, schematics have other active hotspots that link to supporting information such as related schematics, component locator views, harness routing views, and connector end views.

These hotspots can be either text based or symbol based. The following are the items that will have a mouse-over and hotspot.

Schematic Title Circuit References

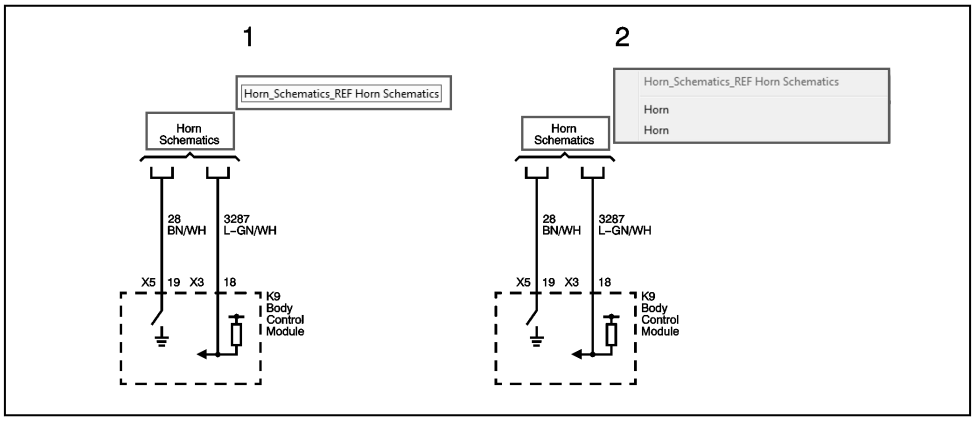

3814891

1. **Mouse-over:** Displays the title of the schematic page linked to.
2. **Hotspot Link to Information:** Links to the individual subsystem schematic page(s) that shows the circuit in detail. If multiple circuits are included, or if the circuit is shown in multiple schematics, a menu will appear when the link is selected. This menu includes links to all schematics that contain the same circuit number as the circuit being referenced. Additionally, when the target schematic is opened, the referenced circuit will be highlighted to draw visual attention. Note that when there are multiple target links, the links may appear to be duplicate in the menu, however, they are not. The exact same title is repeated for each circuit number that is pointing to the same target schematic. A future update will include the circuit number before the link description to further assist in link selection.

Serial Data Functional Circuit Icon

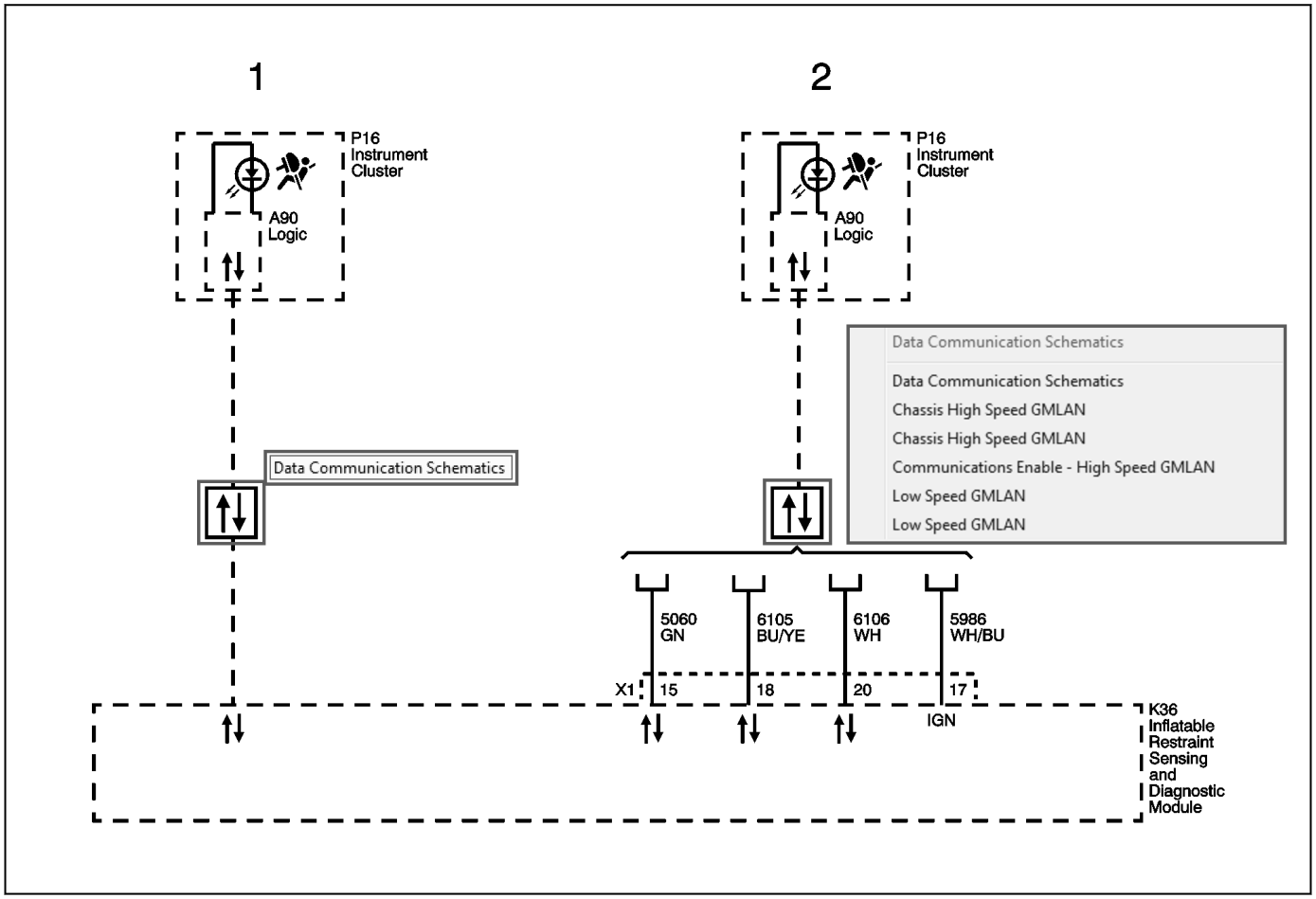

3818612

1. **Mouse-over:** Displays the schematic title Data Communication Schematics.
2. **Hotspot Link to Information:**
   - ⇒ When a dashed serial data wire and icon are shown without any circuit numbers, the serial data circuit icon will link to the complete list of Data Communication schematic pages, and not a specific schematic. This is due to no circuit numbers are shown.
   - ⇒ When a circuit wire(s) are shown with circuit numbers, a menu will appear when the link is selected. This menu includes links to the list of Data Communication schematic pages as well as links to the individual schematics that contain the same circuit number as the circuit being referenced. Additionally, when the target schematic is opened, the referenced circuit will be highlighted to draw visual attention. Note that when there are multiple target links, the links may appear to be duplicate in the menu, however, they are not. The exact same title is repeated for each circuit number that is pointing to the same target schematic. A future update will include the circuit number before the link description to further assist in link selection.

Fuse/Circuit Breaker Symbol and Name within Subsystem Schematics

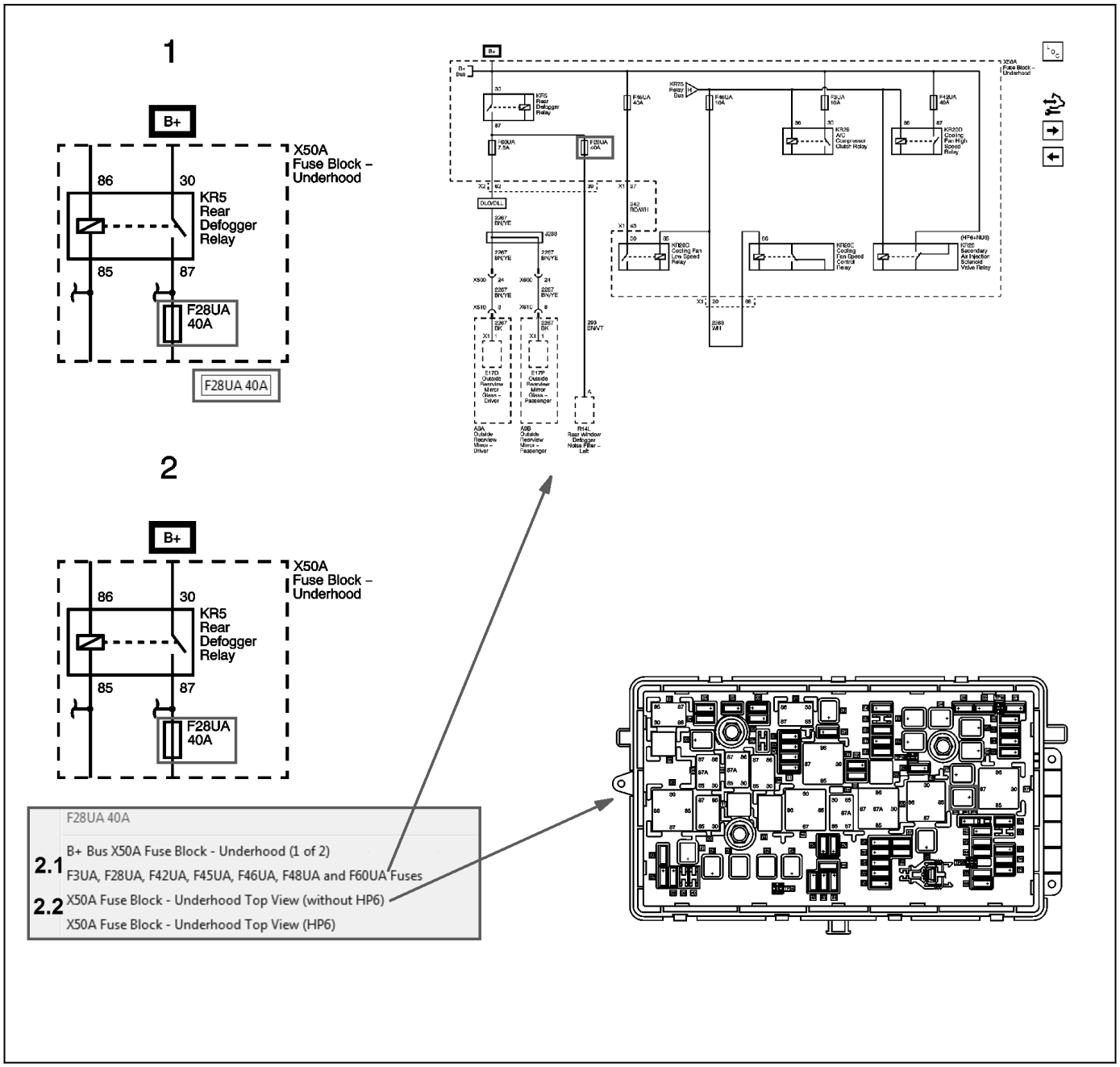

3818725

1. **Mouse-over:** Displays the code and the amperage of the protection device.
2. **Hotspot Link to Information:**
   ⇒ When multiple links are available, a menu will appear when the link is selected. This menu includes all available links in a structured sequence.
   2.1. Links to the individual schematic page(s) within the Power Distribution Schematics where the circuits are shown in detail. Additionally, when the target schematic is opened, the circuit protection device will be highlighted to draw visual attention.
   2.2. Links to individual fuse block top or bottom view(s) within the Electrical Center Identification Views and will show where the device is located in the fuse block. Additionally, when the target view is opened, the device outline will be highlighted for visual attention.

Ground Symbol/Name in Subsystem Schematics

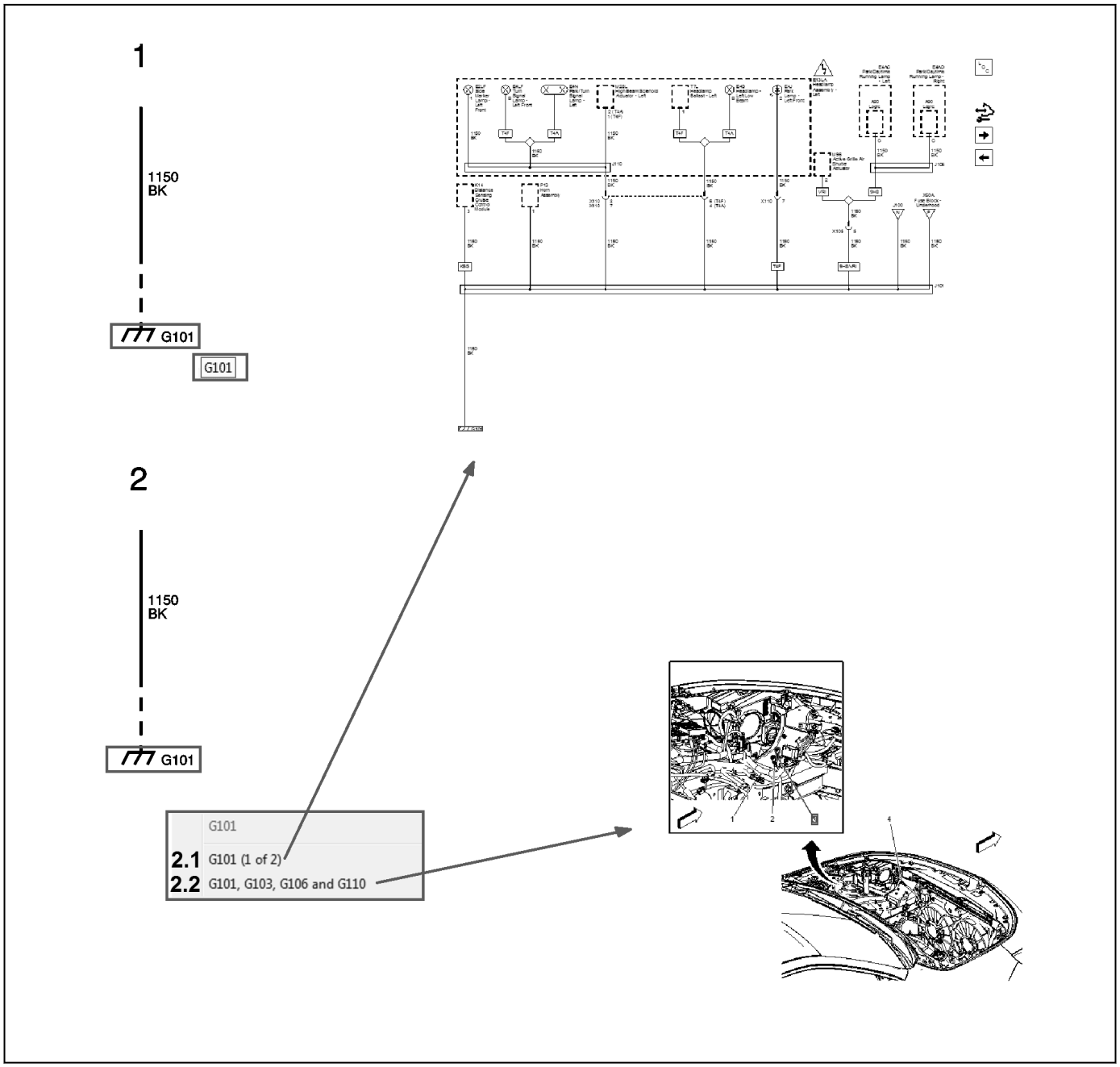

3818918

1. **Mouse-over:** Displays the ground number.
2. **Hotspot Link to Information:**
   - ⇒ When multiple links are available, a menu will appear when the link is selected. This menu includes all available links in a structured sequence.
   - 2.1. Links to the individual schematic page(s) within the Ground Distribution Schematics where the circuits are shown in detail. Additionally, when the target schematic is opened, the ground will be highlighted to draw visual attention.
   - 2.2. Links to the individual locator view(s) within the Ground Views and will show where the ground is located on the vehicle. Additionally, when the target view is opened, the ground and callout leader line/number will be highlighted to draw visual attention.

Body Control Module High-Side Driver Output Symbol/Driver Source Fuse Name in Subsystem Schematics

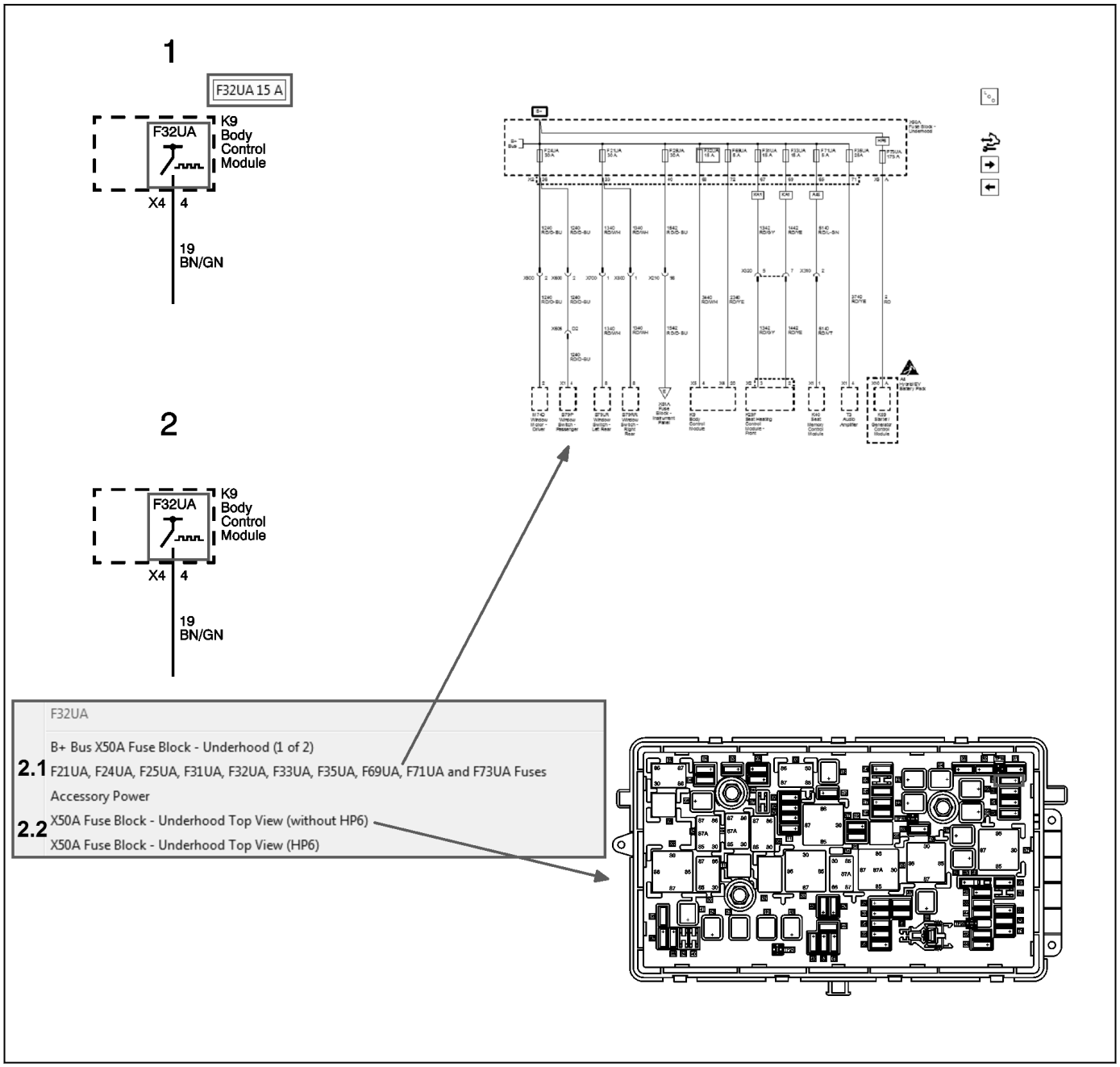

3819026

1. **Mouse-over:** Displays the code of the protection device that supplies the high-side driver output circuit.
2. **Hotspot Link to Information:**
   ⇒ When multiple links are available, a menu will appear when the link is selected. This menu includes all available links in a structured sequence.
   2.1. Links to the individual schematic page(s) within the Power Distribution Schematics where the circuits are shown in detail. Additionally, when the target schematic is opened, the circuit protection device will be highlighted to draw visual attention.
   2.2. Links to individual fuse block top or bottom view(s) within the Electrical Center Identification Views and will show where the device is located in the fuse block. Additionally, when the target view is opened, the device outline will be highlighted for visual attention.

Component Name in Power and Ground Distribution Schematics

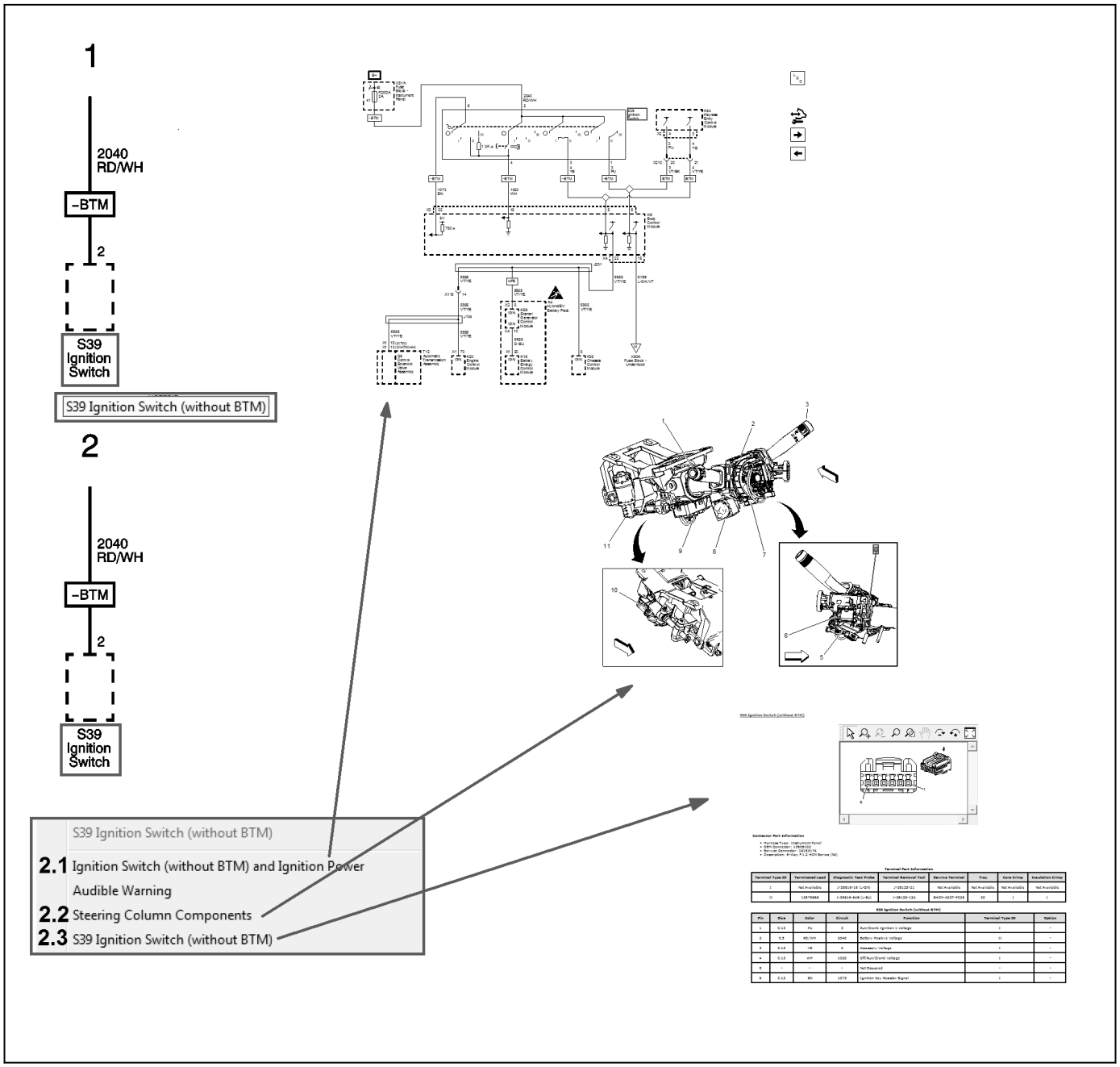

3819063

1. **Mouse-over:** Displays the code and name of the component.
2. **Hotspot Link to Information:**
   ⇒ When multiple links are available, a menu will appear when the link is selected. This menu includes all available links in a structured sequence.
   2.1. Links to the individual schematic page(s) within the Subsystem Schematic(s) where the circuits are shown in detail. Additionally, when the target schematic is opened, the component code and name will be highlighted to draw visual attention.
   2.2. Links to the individual locator view(s) within the applicable component view category and will show where the component is located on the vehicle. Additionally, when the target view is opened, the component and callout leader line/number will be highlighted to draw visual attention.
   2.3. Links to individual connector end view(s) within the Component Connector End Views.

Twisted Pair Symbols

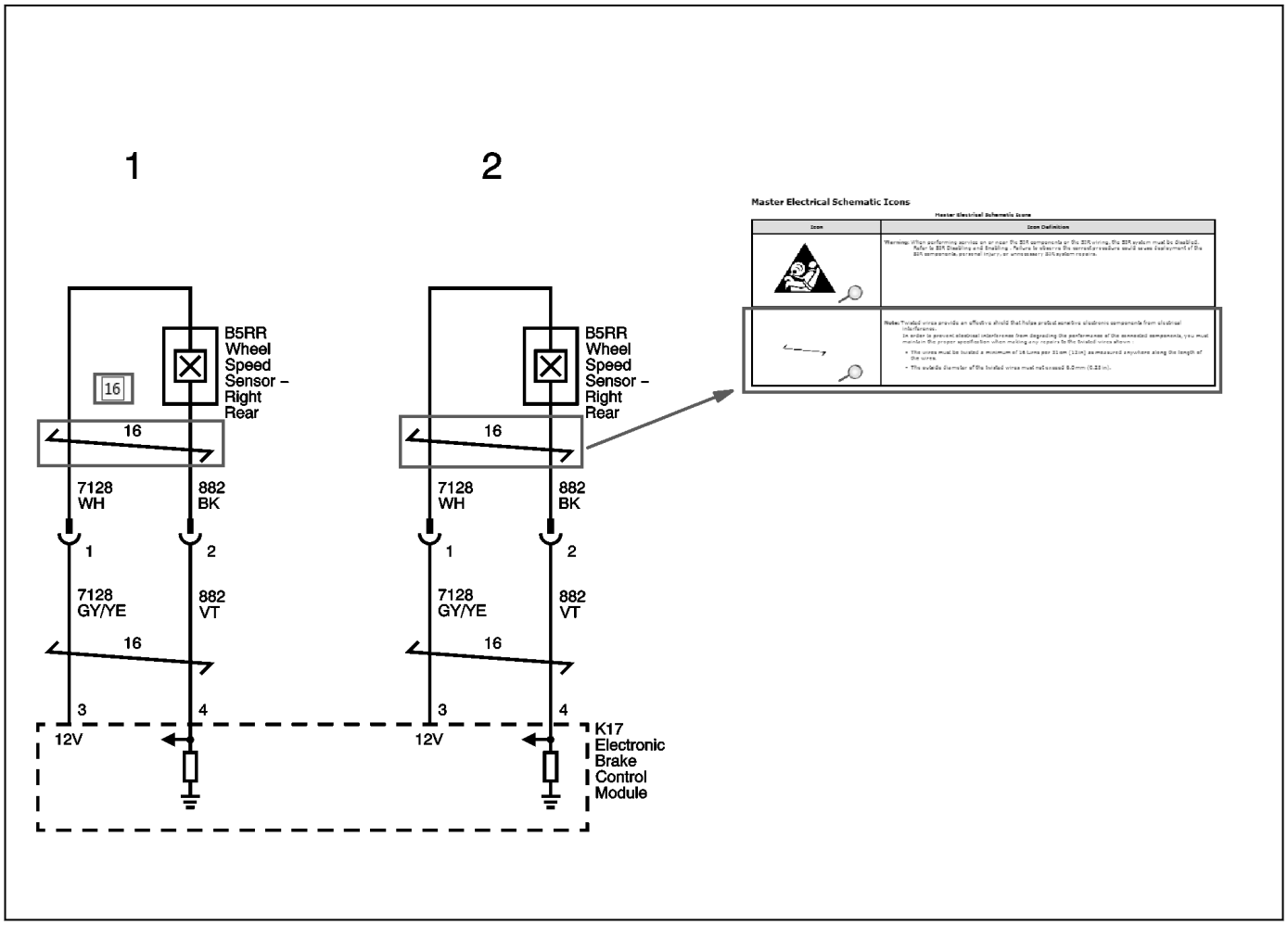

3819064

1. **Mouse-over:** Displays the repair specification for the number of twists of the wire within the specified distance.
2. **Hotspot Link to Information:** Links to the Master Electrical Schematic Icons list that shows the icon along with the repair specification details for the wire.

Relay Name (located within a block)

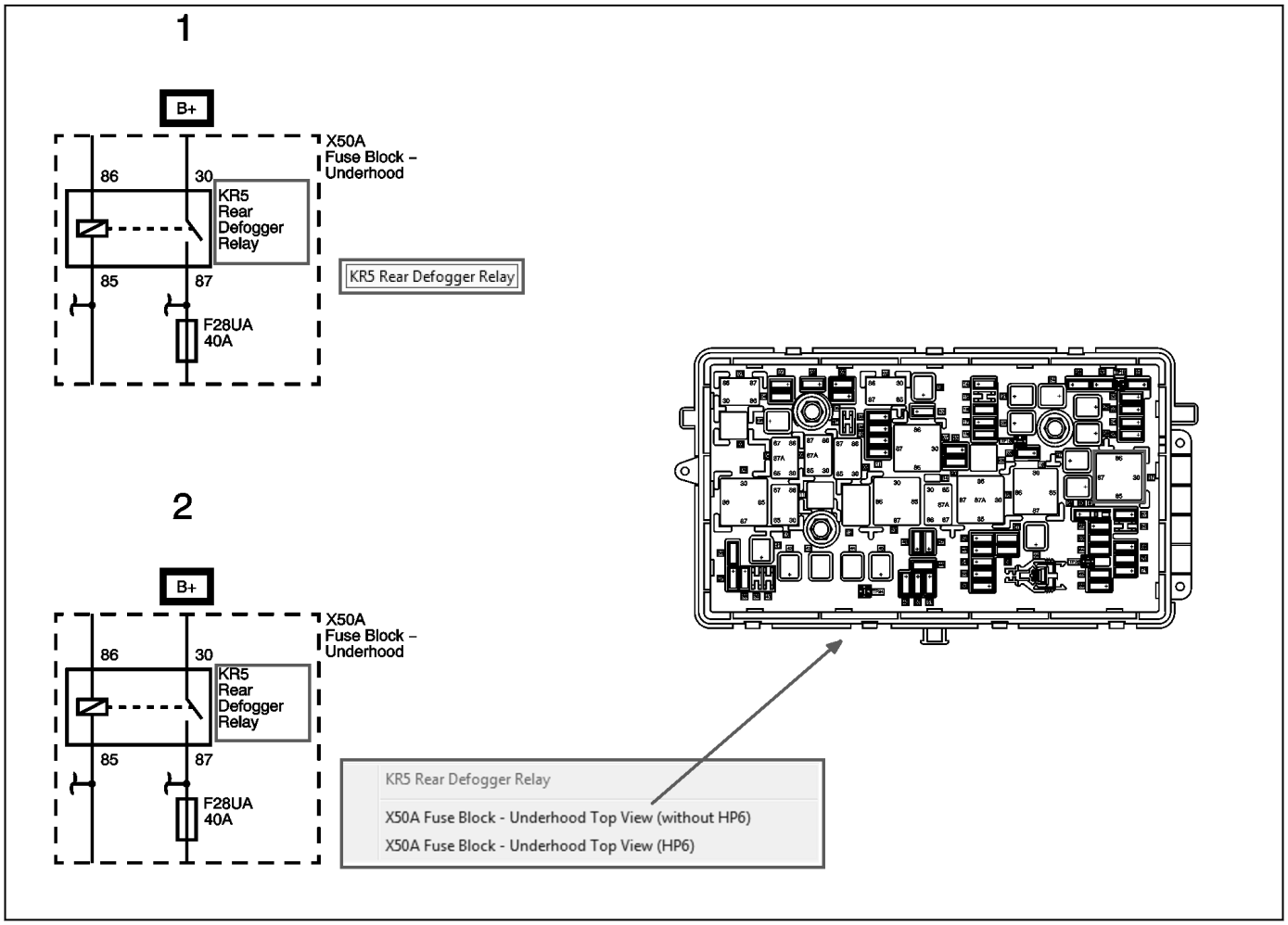

3819124

1. **Mouse-over:** Displays the relay code and name.
2. **Hotspot Link to Information:** Links to individual fuse block top or bottom view(s) within the Electrical Center Identification Views and will show where the device is located in the fuse block. Additionally, when the target view is opened, the device outline will be highlighted for visual attention.

Component Name in Subsystem Schematics

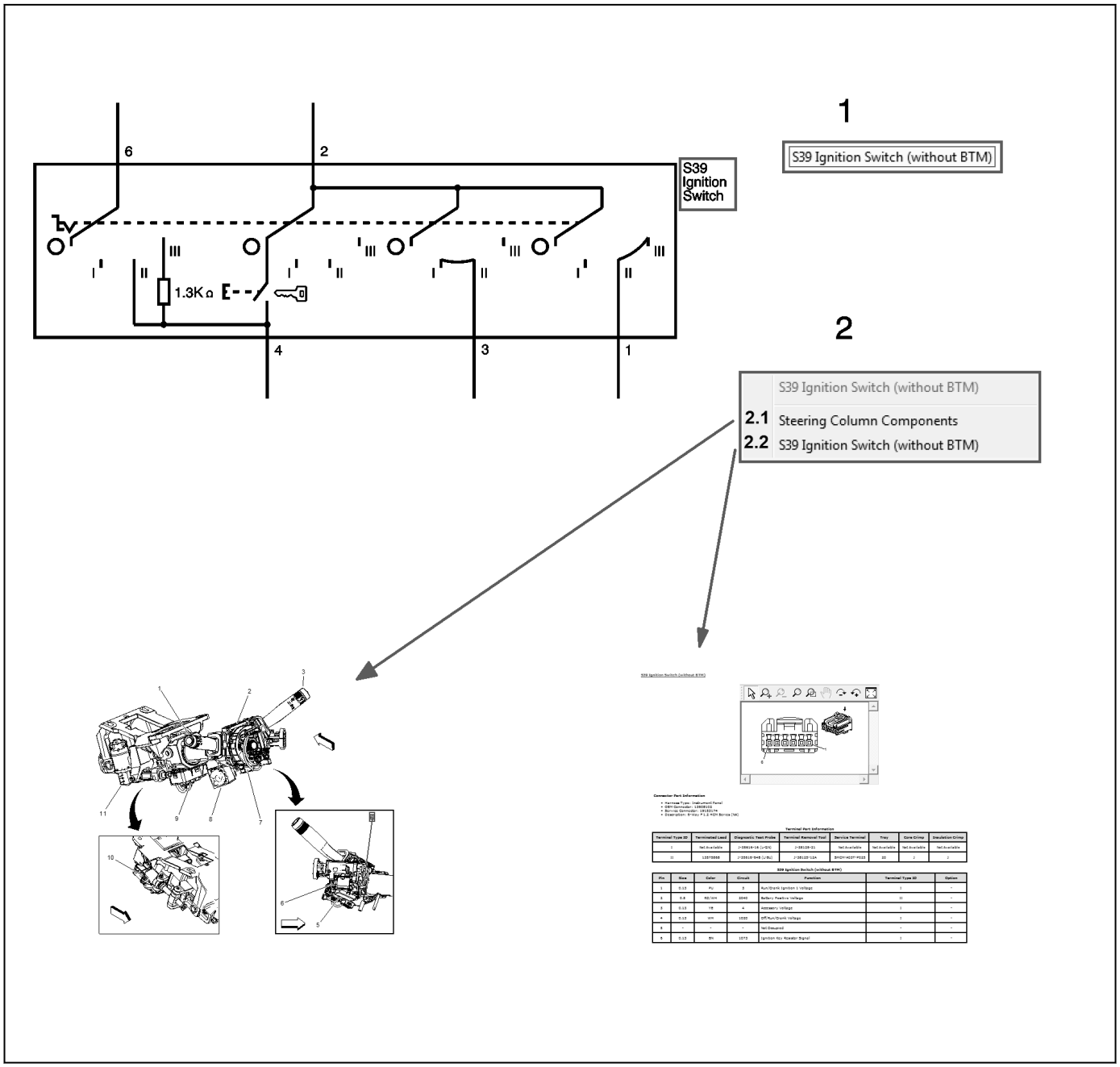

3819141

1. **Mouse-over:** Displays the code and name of the component.
2. **Hotspot Link to Information:**
   ⇒ When multiple links are available, a menu will appear when the link is selected. This menu includes all available links in a structured sequence.
   2.1. Links to the individual locator view(s) within the applicable component view category and will show where the component is located on the vehicle. Additionally, when the target view is opened, the component and callout leader line/number will be highlighted to draw visual attention.
   2.2. Links to individual connector end view(s) within the Component Connector End Views.

Splice Names

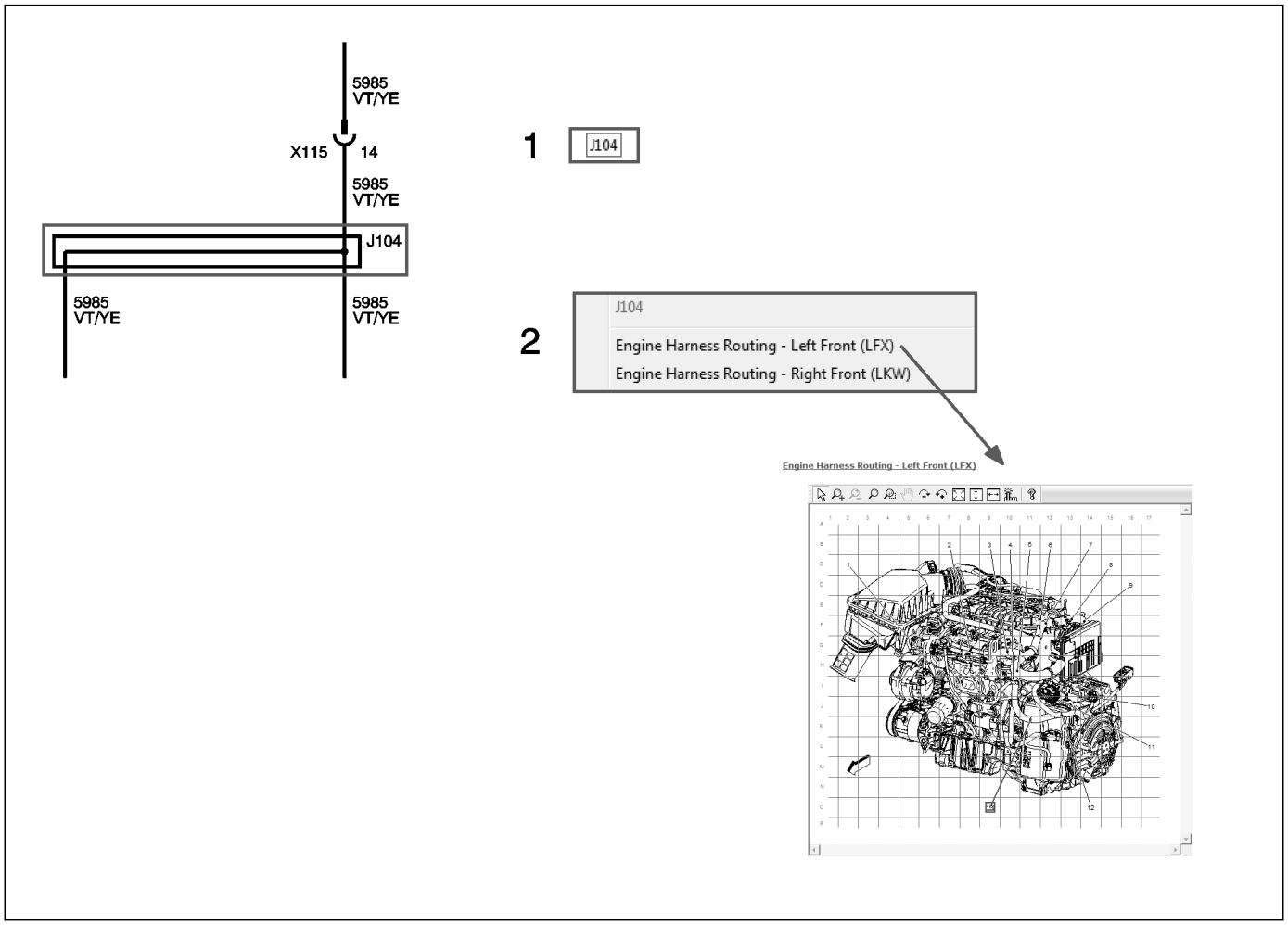

3819287

1. **Mouse-over:** Displays the code of the harness splice.
2. **Hotspot Link to Information:** Links to the individual harness routing view(s) within the Harness Routing Views and will show where the harness item is located on the vehicle harness. Additionally, when the target view is opened, the harness item and callout leader line/number will be highlighted to draw visual attention.

Splice Pack Names

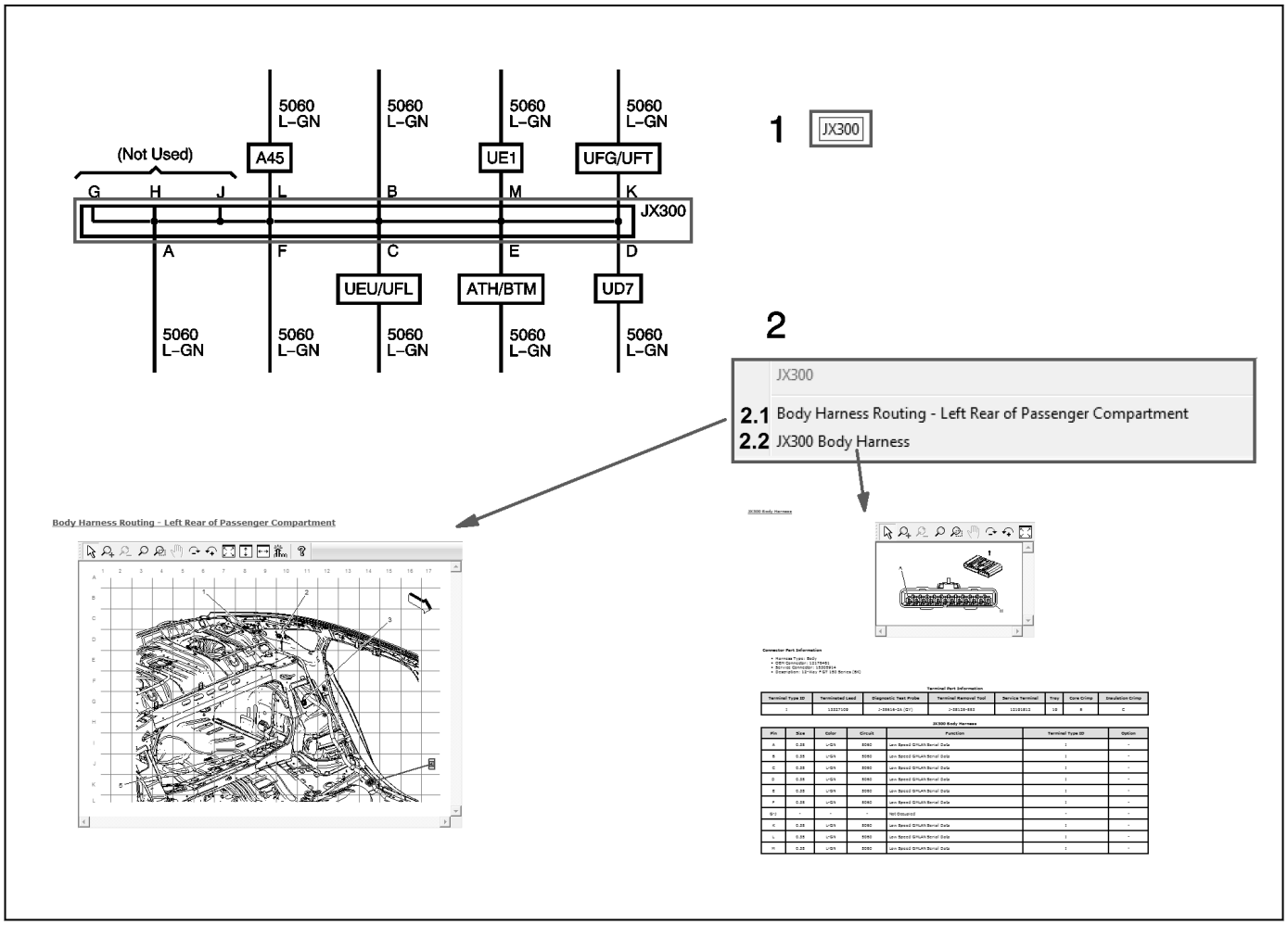

3819454

1. **Mouse-over:** Displays the code of the harness splice pack.
2. **Hotspot Link to Information:**
   ⇒ When multiple links are available, a menu will appear when the link is selected. This menu includes all available links in a structured sequence.
   2.1. Links to the individual harness routing view(s) within the Harness Routing Views and will show where the harness item is located on the vehicle harness. Additionally, when the target view is opened, the harness item and callout leader line/number will be highlighted to draw visual attention.
   2.2. Links to individual connector end view(s) within the Splice Pack Connector End Views.

Inline Harness Connector Names

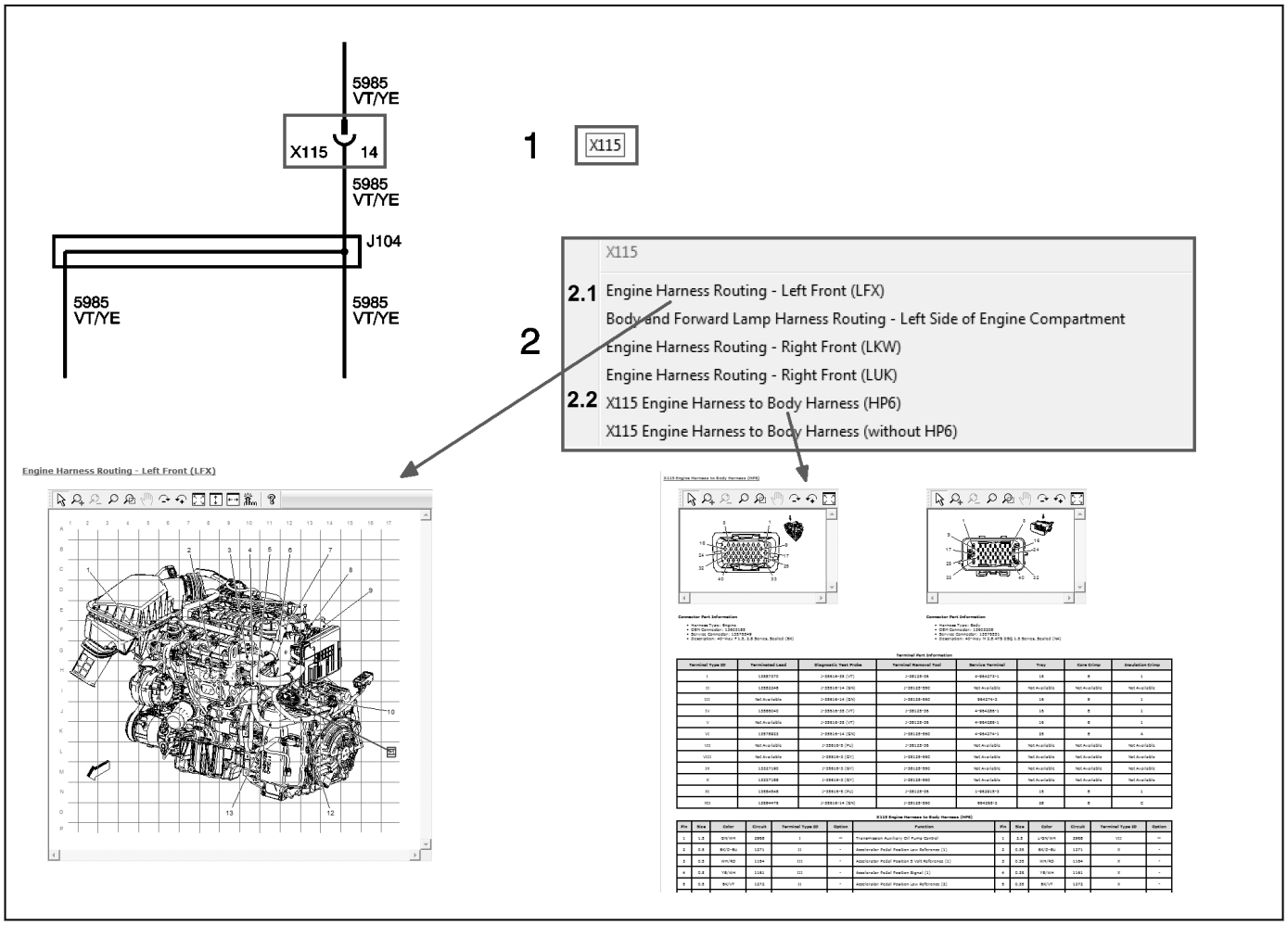

3819345

1. **Mouse-over:** Displays the code of the inline harness connector.
2. **Hotspot Link to Information:**
   ⇒ When multiple links are available, a menu will appear when the link is selected. This menu includes all available links in a structured sequence.
   2.1. Links to the individual harness routing view(s) within the Harness Routing Views and will show where the harness item is located on the vehicle harness. Additionally, when the target view is opened, the harness item and callout leader line/number will be highlighted to draw visual attention.
   2.2. Links to individual connector end view(s) within the Inline Harness Connector End Views.

Regular Production Option (RPO) Codes/Icons

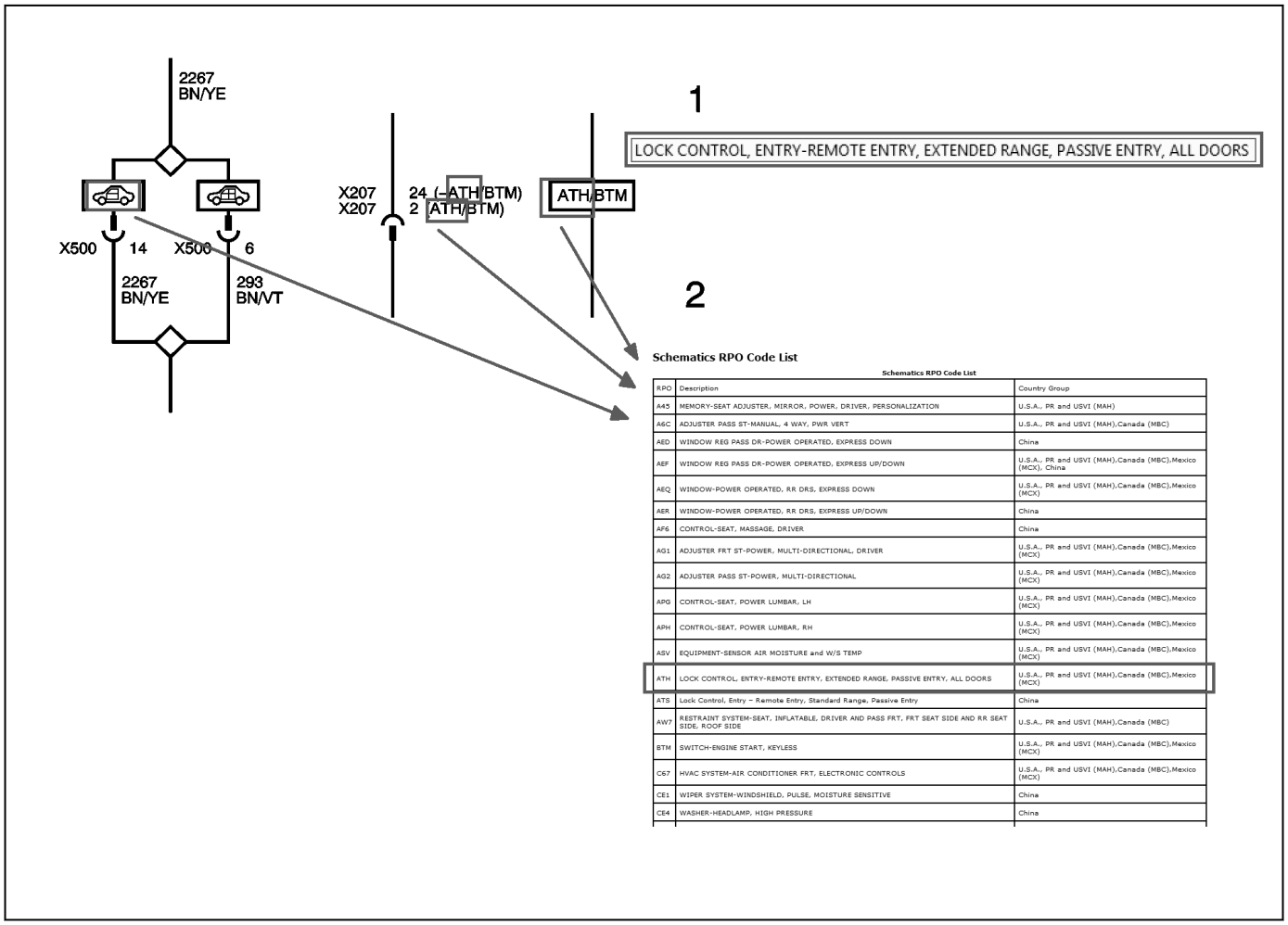

Schematics RPO Code List

RPO	Description	Country Group
A45	MEMORY-SEAT ADJUSTER, MIRROR, POWER, DRIVER, PERSONALIZATION	U.S.A., PR and USVI (MAH)
A6C	ADJUSTER PASS ST-MANUAL, 4 WAY, PWR VERT	U.S.A., PR and USVI (MAH),Canada (MBC)
AED	WINDOW REG PASS DR-POWER OPERATED, EXPRESS DOWN	China
AEF	WINDOW REG PASS DR-POWER OPERATED, EXPRESS UP/DOWN	U.S.A., PR and USVI (MAH),Canada (MBC),Mexico (MCX), China
AEQ	WINDOW-POWER OPERATED, RR DRS, EXPRESS DOWN	U.S.A., PR and USVI (MAH),Canada (MBC),Mexico (MCX)
AER	WINDOW-POWER OPERATED, RR DRS, EXPRESS UP/DOWN	China
AF6	CONTROL-SEAT, MASSAGE, DRIVER	China
AG1	ADJUSTER FRT ST-POWER, MULTI-DIRECTIONAL, DRIVER	U.S.A., PR and USVI (MAH),Canada (MBC),Mexico (MCX)
AG2	ADJUSTER PASS ST-POWER, MULTI-DIRECTIONAL	U.S.A., PR and USVI (MAH),Canada (MBC),Mexico (MCX)
APG	CONTROL-SEAT, POWER LUMBAR, LH	U.S.A., PR and USVI (MAH),Canada (MBC),Mexico (MCX)
APH	CONTROL-SEAT, POWER LUMBAR, RH	U.S.A., PR and USVI (MAH),Canada (MBC),Mexico (MCX)
ASV	EQUIPMENT-SENSOR AIR MOISTURE and W/S TEMP	U.S.A., PR and USVI (MAH),Canada (MBC),Mexico (MCX)
ATH	LOCK CONTROL, ENTRY-REMOTE ENTRY, EXTENDED RANGE, PASSIVE ENTRY, ALL DOORS	U.S.A., PR and USVI (MAH),Canada (MBC),Mexico (MCX)
ATS	Lock Control, Entry – Remote Entry, Standard Range, Passive Entry	China
AW7	RESTRAINT SYSTEM-SEAT, INFLATABLE, DRIVER AND PASS FRT, FRT SEAT SIDE AND RR SEAT SIDE, ROOF SIDE	U.S.A., PR and USVI (MAH),Canada (MBC)
BTM	SWITCH-ENGINE START, KEYLESS	U.S.A., PR and USVI (MAH),Canada (MBC),Mexico (MCX)
C67	HVAC SYSTEM-AIR CONDITIONER FRT, ELECTRONIC CONTROLS	U.S.A., PR and USVI (MAH),Canada (MBC),Mexico (MCX)
CE1	WIPER SYSTEM-WINDSHIELD, PULSE, MOISTURE SENSITIVE	China
CE4	WASHER-HEADLAMP, HIGH PRESSURE	China

3819777

1. **Mouse-over:** Displays the description of the RPO code as well as the country group names where the option is possible to order. Note that each RPO shown will have its own mouse-over and description. Also note that the mouse-over does not include any symbols indicating with (shown as a + sign if combined option) or without (shown as a – sign to mean without/except).
2. **Hotspot Link to Information:** Links to the Schematics RPO Code List that shows the RPO, the description of the option, and the country group names where the option is possible to order.

Circuit Number/Wire Colors

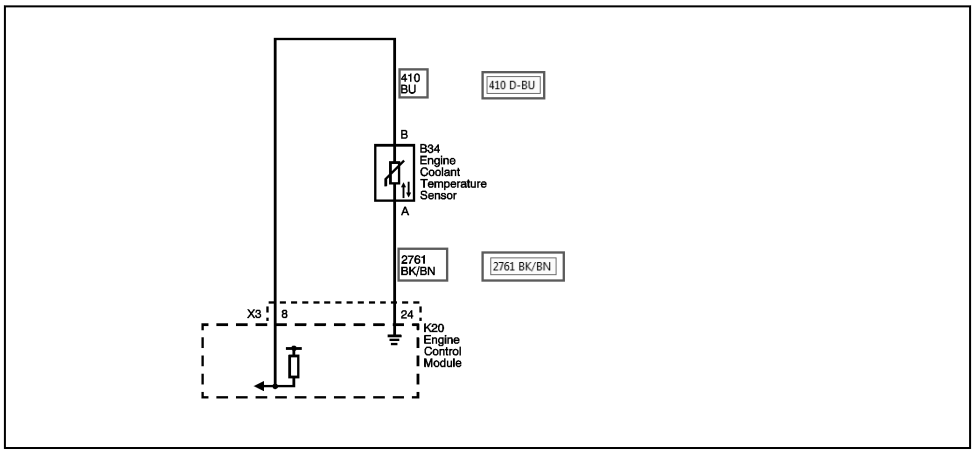

3819880

1. **Mouse-over:** Displays the circuit number (if shown) and the color abbreviation of the wire insulation. Refer to Color Abbreviations for an explanation of each wire color abbreviation. A future update may spell out the wire colors in all languages.
2. **Hotspot Link to Information:** None at this time.

Wire Lines

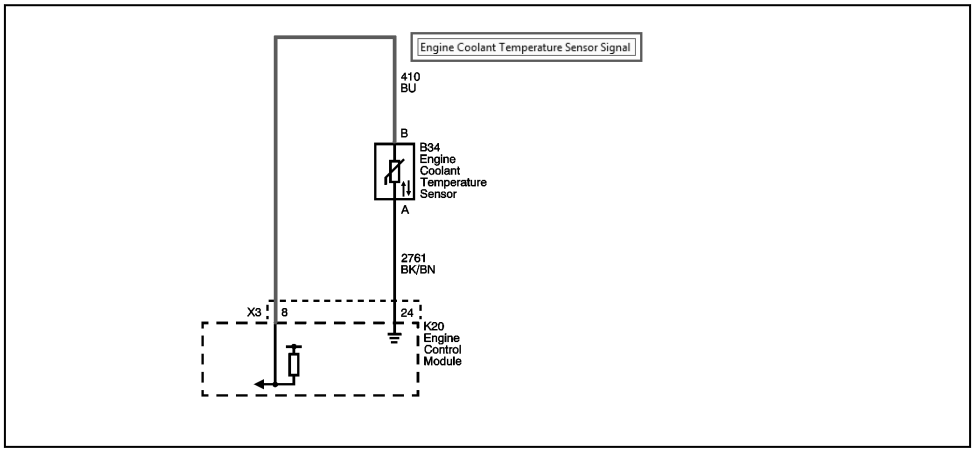

3819888

1. **Mouse-over:** Displays the circuit function of the wire as used on the vehicle. This same function is shown in the connector end view pinout table for the component the wire connects. Note if there is no circuit number shown, the circuit will not have an associated mouse-over.
2. **Hotspot Link to Information:** None at this time. A future update may include links to harness routing views to show the routing of the circuit within the vehicle harness.

Connector Identifiers and Cavities

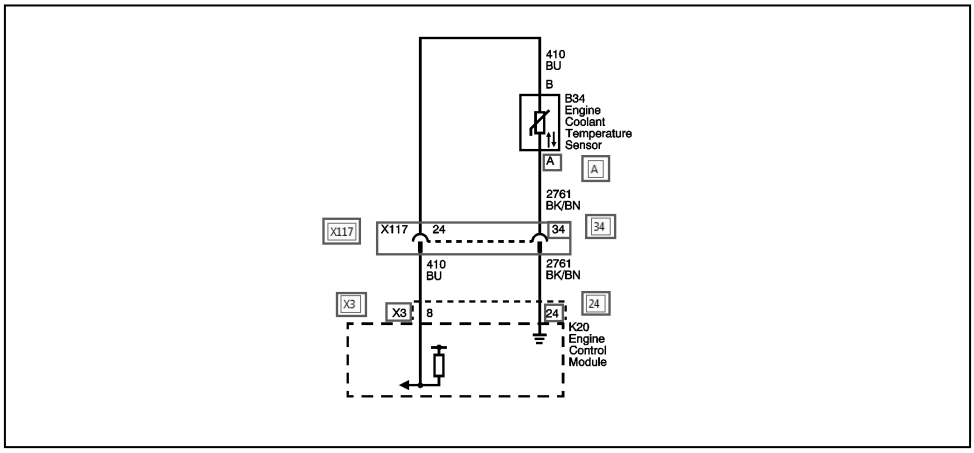

3819889

1. **Mouse-over:** Displays the cavity (pin) identifier (letter/number) for the connection at the component or inline harness connection.
2. **Hotspot Link to Information:** None at this time.

Connector End Views

Connector end view graphics now have mouse-overs to show the wire details of each of the populated cavities. Additionally, the terminal part information has been restructured into an easier to read table.

K9 Body Control Module X1

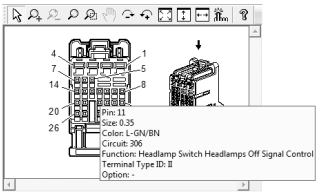

Connector Part Information

- Harness Type: Instrument Panel
- OEM Connector: 13631051
- Service Connector: 13576639
- Description: 26-Way F 64 Series (NA)

Terminal Part Information

Terminal Type ID	Terminated Lead	Diagnostic Test Probe	Terminal Removal Tool	Service Terminal	Tray	Core Crimp	Insulation Crimp
I	13327199	J-35616-35 (VT)	J-38125-12A	SNAC-A061T-M2.8	20	E	A
II	13327195	J-35616-64B (L-BU)	J-38125-12A	SNAC3-A021T-M0.64	20	J	J
III	13579954	J-35616-64B (L-BU)	J-38125-12A	Not Available	Not Available	Not Available	Not Available

K9 Body Control Module X1

Pin	Size	Color	Circuit	Function	Terminal Type ID	Option
1	0.75	BK	1650	Ground	I	-
2	0.5	RD/BK	2540	Battery Positive Voltage	I	-
3	0.5	RD/BK	2140	Battery Positive Voltage	I	-
4	0.5	RD/BN	2240	Battery Positive Voltage	I	-
5	0.35	WH	6816	Indicator Dimming Control	II	-
6	-	-	-	Not Occupied	-	-
7	0.35	BK/YE	5005	Instrument Panel Lamp Dimmer Switch Low Reference	II	-
8	0.13	BN	5720	Ignition Mode Switch Accessory LED Signal	III	-
9-10	-	-	-	Not Occupied	-	-
11	0.35	L-GN/BN	306	Headlamp Switch Headlamps Off Signal Control	II	-
12	-	-	-	Not Occupied	-	-
13	0.35	D-BU/RD	1688	5 Volt Reference	II	-
14	0.35	GY/L-GN	328	Interior Lamp Defeat Switch Signal	II	-
15	-	-	-	Not Occupied	-	-
16	0.35	WH/VT	103	Headlamp Switch On Signal	II	-
17	0.13	GY	7543	Hazard LED Dimming Signal	III	-
18	-	-	-	Not Occupied	-	-
19	0.5	BK/BN	5360	Brake Apply Sensor Low Reference	II	-
20	0.35	D-BU/BK	5719	Ignition Mode Switch Start LED Signal	II	-
21	0.35	GY	728	Security Indicator Control	II	-
22	0.35	L-GN/GY	13	Headlamp Switch Park Lamp Signal	II	-
23	-	-	-	Not Occupied	-	-
24	0.35	WH	2501	High Speed GMLAN Serial Data (-) (1)	II	-
25	0.35	D-BU	2500	High Speed GMLAN Serial Data (+) (1)	II	-
26	0.35	D-BU/WH	3275	Remote Function Actuator Receive Signal	II	-

3819951

1. **Mouse-over:** Displays all of the pinout table information for each column including Pin, Size, Color, Circuit, Function, Terminal Type ID, and Option. Note, that not used/not occupied cavities will not have a mouse-over at all. For not used/not occupied cavities, the connector graphic will appear to have a mouse-over, but no information will be displayed in a pop-up menu.
2. **Hotspot Link to Information:** None at this time. A future update may include links to individual subsystem schematic(s) for each circuit.

Component Locator Views

Component locator views now have links to component connector end views.

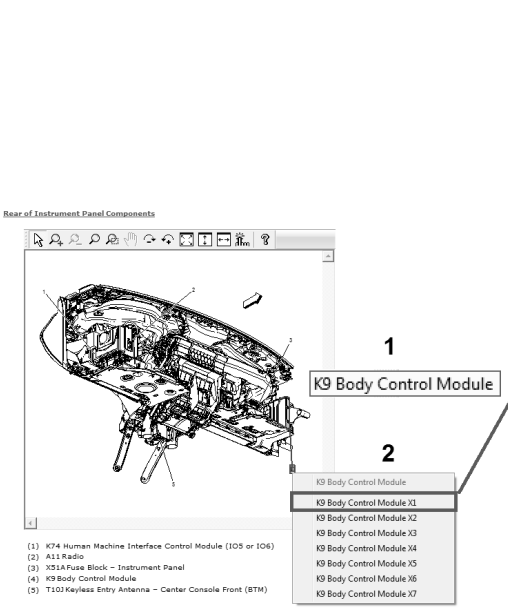

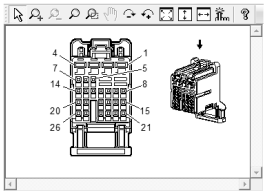

Connector Part Information

- Harness Type: Instrument Panel
- OEM Connector: 13631051
- Service Connector: 13576639
- Description: 26-Way F 64 Series (NA)

Terminal Part Information

Terminal Type ID	Terminated Lead	Diagnostic Test Probe	Terminal Removal Tool	Service Terminal	Tray	Core Crimp	Insulation Crimp
I	13327199	J-35616-35 (VT)	J-38125-12A	SNAC-A061T-M2.8	20	E	A
II	13327195	J-35616-64B (L-BU)	J-38125-12A	SNAC3-A021T-M0.64	20	J	J
III	13579954	J-35616-64B (L-BU)	J-38125-12A	Not Available	Not Available	Not Available	Not Available

K9 Body Control Module X1

Pin	Size	Color	Circuit	Function	Terminal Type ID	Option
1	0.75	BK	1650	Ground	I	-
2	0.5	RD/BK	2540	Battery Positive Voltage	I	-
3	0.5	RD/BK	2140	Battery Positive Voltage	I	-
4	0.5	RD/BN	2240	Battery Positive Voltage	I	-
5	0.35	WH	6816	Indicator Dimming Control	II	-
6	-	-	-	Not Occupied	-	-
7	0.35	BK/YE	5005	Instrument Panel Lamp Dimmer Switch Low Reference	II	-
8	0.13	BN	5720	Ignition Mode Switch Accessory LED Signal	III	-
9-10	-	-	-	Not Occupied	-	-
11	0.35	L-GN/BN	306	Headlamp Switch Headlamps Off Signal Control	II	-
12	-	-	-	Not Occupied	-	-
13	0.35	D-BU/RD	1688	5 Volt Reference	II	-
14	0.35	GY/L-GN	328	Interior Lamp Defeat Switch Signal	II	-
15	-	-	-	Not Occupied	-	-
16	0.35	WH/VT	103	Headlamp Switch On Signal	II	-
17	0.13	GY	7543	Hazard LED Dimming Signal	III	-
18	-	-	-	Not Occupied	-	-
19	0.5	BK/BN	5360	Brake Apply Sensor Low Reference	II	-
20	0.35	D-BU/BK	5719	Ignition Mode Switch Start LED Signal	II	-
21	0.35	GY	728	Security Indicator Control	II	-
22	0.35	L-GN/GY	13	Headlamp Switch Park Lamp Signal	II	-
23	-	-	-	Not Occupied	-	-
24	0.35	WH	2501	High Speed GMLAN Serial Data (-) (1)	II	-
25	0.35	D-BU	2500	High Speed GMLAN Serial Data (+) (1)	II	-
26	0.35	D-BU/WH	3275	Remote Function Actuator Receive Signal	II	-

3819952

1. **Mouse-over:** Displays the code and name of the component.
2. **Hotspot Link to Information:** Links to individual connector end view(s) within Component Connector End Views.

Harness Routing Views

Harness routing views now have links to splice pack and inline harness connector end views.

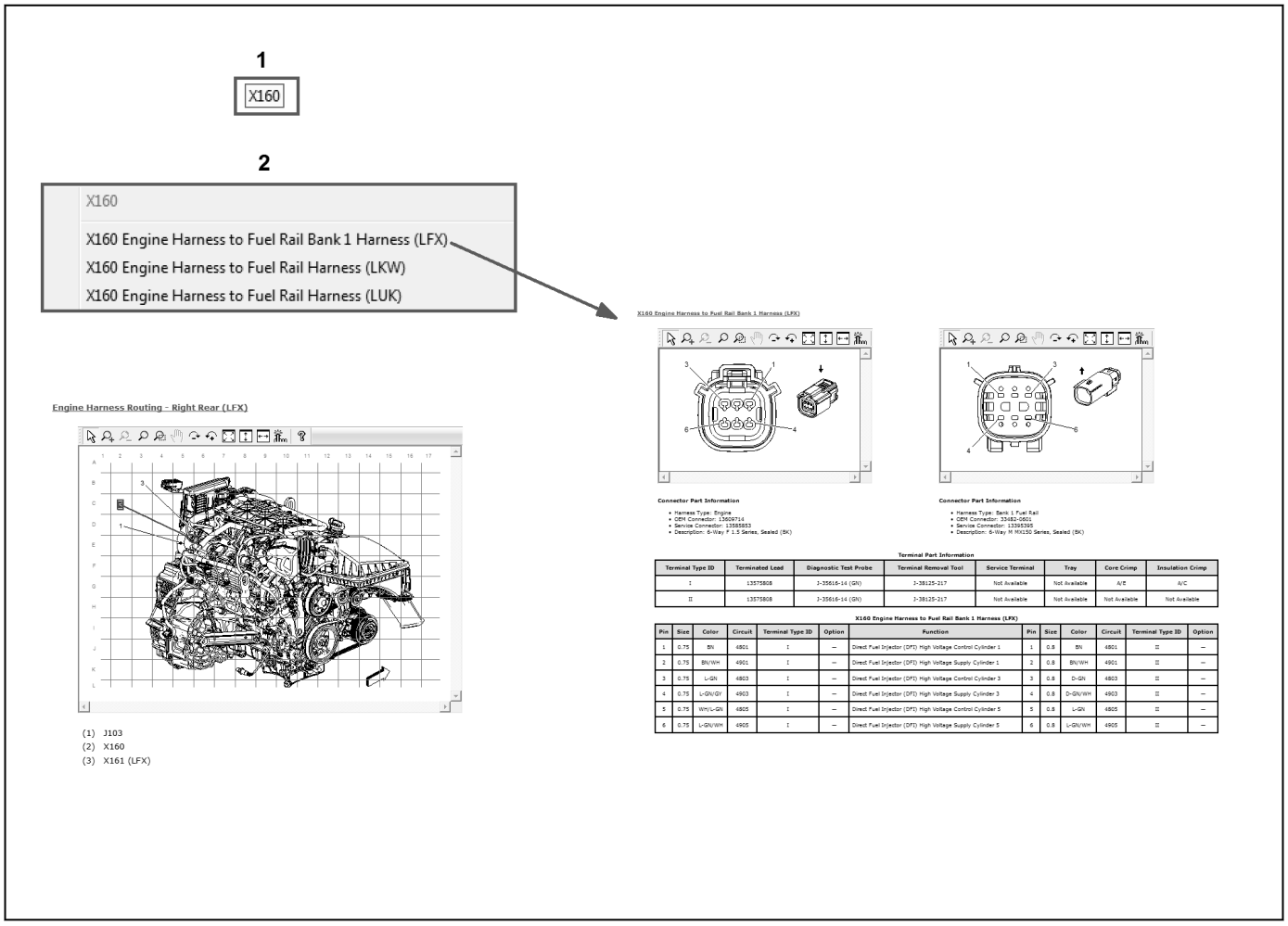

3819958

1. **Mouse-over:** Displays the code of the harness item.
2. **Hotspot Link to Information:** Links to individual splice pack connector end view(s) within Splice Pack Connector End Views for splice packs and to the individual inline harness connector end view(s) within Inline Harness Connector End Views for inline harness connectors.

Electrical Center Identification Views

Electrical center identification views (top and bottom/front and back) graphics now have mouse-overs to show the function details of each of utilized devices. Note that the label view will not have any mouse-overs or links at all.

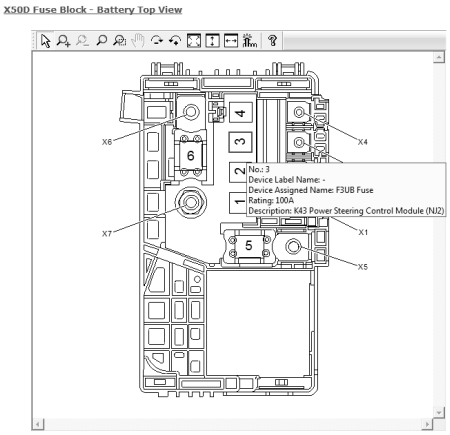

X50D Fuse Block - Battery Usage

No.	Device Label Name	Device Assigned Name	Rating	Description
1	-	F1UB Fuse	60A	X51A Fuse Block - Instrument Panel
2	-	F2UB Fuse	60A	X51A Fuse Block - Instrument Panel
3	-	F3UB Fuse	100A	K43 Power Steering Control Module (NJ2)
4	-	F4UB Fuse	80A	K43 Power Steering Control Module (NJ1)
5	-	F5UB Fuse	250A	X50A Fuse Block - Underhood
6	-	F6UB Fuse	300A	G13 Generator (without HP6), M64 Starter Motor

3820005

1. **Mouse-over:** Displays all of the usage table information for each column including No., Device Label Name, Device Assigned Name, Rating, and Description. Note, that not used/not occupied devices will not have a mouse-over at all. For not used/not occupied devices, the device graphic may appear to have a mouse-over, but no information will be displayed in a pop-up screen.
2. **Hotspot Link to Information:** None at this time.

Master Electrical Component List

While the master electrical component list format has not changed, it will continue to have links to component locator, harness routing, and connector end views for each of the available electrical devices within the vehicle.

Master Electrical Component List

Master Electrical Component List

Code	Name	Option	Location	Locator View	Connector End View
A3L	Sunshade – Left	—	In the passenger compartment, left front, mounted to the headliner at left front	—	—
A3R	Sunshade – Right	—	In the passenger compartment, right front, mounted to the headliner at right front	—	—
A4	Hybrid/EV battery pack	HP6	In the luggage compartment, right behind rear of the seats	Right Side of Luggage Compartment Components	—
A7	Fuel Pump and Level Sensor Assembly	—	In the vehicle underbody, below rear seats, mounted to fuel tank	Fuel Tank Components	A7 Fuel Pump and Level Sensor Assembly
A9A	Outside Rearview Mirror – Driver	—	On outside of driver door, front middle, forward of window opening	Driver Door Components	—
A9B	Outside Rearview Mirror – Passenger	—	On outside of passenger door, front middle, forward of window opening	Passenger Door Components	—
A10	Inside Rearview Mirror	DD8	In the passenger compartment, front center, mounted to top of windshield	Headliner Components	A10 Inside Rearview Mirror (DD8)
A11	Radio	—	In the passenger compartment, front right in instrument panel, near instrument panel courtesy lamp - right	Rear of Instrument Panel Components	• A11 Radio X1 • A11 Radio X2 • A11 Radio X4 • A11 Radio X6 (U2K or U2M) • A11 Radio X7 (IQ3) • A11 Radio X8 (IQ3)
A14D	Seat Lumbar Support Pump – Driver	—	In the passenger compartment, left forward of center, in driver seat back outboard side	Driver Seat Components	A14D Seat Lumbar Support Pump - Driver
A14P	Seat Lumbar Support Pump – Passenger	APH	In the passenger compartment, right forward of center, in the passenger seat back outboard side	Passenger Seat Components	A14P Seat Lumbar Support Pump - Passenger (APH)
A15	Starter/Generator	HP6	In the engine compartment, right front of engine	—	• A15 Starter/Generator X1 (HP6) • A15 Starter/Generator X2 (HP6)
A22	Radio Controls	—	In the passenger compartment, center front, part of the info display module, in instrument panel, above HVAC controls	Front of Instrument Panel Components	—
A23D	Door Latch Assembly – Driver	—	Inside the driver door, at rear below middle	Driver Door Components	A23D Door Latch Assembly - Driver
A23LR	Door Latch Assembly – Left Rear	—	Inside the left rear door, at rear below middle	Left Rear Door Components	A23LR Door Latch Assembly - Left Rear
A23P	Door Latch Assembly – Passenger	—	Inside the passenger door, at rear below middle	Passenger Door Components	A23P Door Latch Assembly - Passenger
A23RR	Door Latch Assembly – Right Rear	—	Inside the right rear door, at rear below middle	Right Rear Door Components	A23RR Door Latch Assembly - Right Rear
A24D	Door Handle Assembly – Driver Exterior	ATH	On the outside of driver door, rear middle	Driver Door Components	A24D Door Handle Assembly - Driver Exterior (ATH)
A24LR	Door Handle Assembly - Left Rear Exterior	ATH	On the outside of left rear door, rear middle	Left Rear Door Components	A24LR Door Handle Assembly - Left Rear Exterior (ATH)
A24P	Door Handle Assembly – Passenger Exterior	ATH	On the outside of passenger door, rear middle	Passenger Door Components	A24P Door Handle Assembly - Passenger Exterior (ATH)
A24RR	Door Handle Assembly - Right Rear Exterior	ATH	On the outside of right rear door, rear middle	Right Rear Door Components	A24RR Door Handle Assembly - Right Rear Exterior (ATH)
A26	HVAC Controls	—	In the passenger compartment, front center, on instrument panel, below radio controls	Front of Instrument Panel Components	A26 HVAC Controls
A33	Media Disc Player	—	In the passenger compartment, front center, on instrument panel, below and forward of radio controls	—	A33 Media Disc Player
B1	A/C Refrigerant Pressure Sensor	—	At the front of vehicle, right of center, front of A/C condenser, mounted to right side near bottom	Radiator Assembly Components	• B1 A/C Refrigerant Pressure Sensor (LFX or LUK) • B1 A/C Refrigerant Pressure Sensor (LKW)
B5LF	Wheel Speed Sensor – Left Front	—	At the left front suspension, mounted to knuckle, rearward of axle	Fuel Composition Sensor, Wheel Speed Sensors and Parking Brake	B5LF Wheel Speed Sensor - Left Front
B5LR	Wheel Speed Sensor – Left Rear	—	At the left rear suspension, mounted to knuckle, forward side	Fuel Composition Sensor, Wheel Speed Sensors and Parking Brake	B5LR Wheel Speed Sensor - Left Rear
B5RF	Wheel Speed Sensor – Right Front	—	At the right front suspension, mounted to knuckle, rearward of axle	Fuel Composition Sensor, Wheel Speed Sensors and Parking Brake	B5RF Wheel Speed Sensor - Right Front
B5RR	Wheel Speed Sensor – Right Rear	—	At the right rear suspension, mounted to knuckle, forward side	Fuel Composition Sensor, Wheel Speed Sensors and Parking Brake	B5RR Wheel Speed Sensor - Right Rear
B7D	Air Temperature Sensor – Duct Left Lower	CJ2	In the passenger compartment, within the instrument panel, center front, left side middle of HVAC assembly	HVAC Assembly Components (CJ2)	B7D Air Temperature Sensor - Duct Left Lower (CJ2)
B7E	Air Temperature Sensor – Duct Right Lower	CJ2	In the passenger compartment, within the instrument panel, center front, right side middle of HVAC assembly	HVAC Assembly Components (CJ2)	B7E Air Temperature Sensor - Duct Right Lower (CJ2)
B7H	Air Temperature Sensor – Duct Left Upper	CJ2	In the passenger compartment, within the instrument panel, center front, left side top of HVAC assembly	HVAC Assembly Components (CJ2)	B7H Air Temperature Sensor - Duct Left Upper (CJ2)
B7J	Air Temperature Sensor – Duct Right Upper	CJ2	In the passenger compartment, within the instrument panel, center front, right side top of HVAC assembly	HVAC Assembly Components (CJ2)	B7J Air Temperature Sensor - Duct Right Upper (CJ2)
B9	Ambient Air Temperature Sensor	—	At the front of vehicle, left of center, mounted to rear of lower grille	Front of Vehicle Components	B9 Ambient Air Temperature Sensor
B10B	Ambient Light/Sunload Sensor	—	In the passenger compartment, center front, in instrument panel, rear of windshield defroster outlet	Front of Instrument Panel Components	B10B Ambient Light/Sunload Sensor
B12A	Transmission Fluid Pressure Switch	—	In the engine compartment, part of the control solenoid valve assembly, mounted to the valve body inside the transmission	—	—
B13	Transmission Fluid Temperature Sensor	—	In the engine compartment, part of the control solenoid valve assembly, mounted to the valve body inside the transmission	—	—

3820020

1. **Mouse-over:** None at this time.
2. **Hotspot Link to Information:**
   - ⇒ A future update may include links to individual subsystem schematic(s) for each component/ harness item.
   - ⇒ **Components**
     - − Links to individual locator view within one of the eight component view categories and will show where the component is located in the vehicle.
     - − Links to individual connector end view(s) within Component Connector End Views.
   - ⇒ **Electrical Centers (Fuse Blocks)**
     - − Links to individual locator view within one of the eight component view categories and will show where the component is located in the vehicle.
     - − Links to individual connector end view(s) within Electrical Center Identification Views.
   - ⇒ **Inline Harness Connectors**
     - − Links to individual harness routing view(s) within Harness Routing Views and will show where the harness item is located on the vehicle harness.
     - − Links to individual connector end view(s) within Inline Harness Connector End Views.
   - ⇒ **Grounds**

- Links to individual locator view within Ground Views component view and will show where the ground is located in the vehicle.

⇒ **Splices**

- Links to individual harness routing view(s) within Harness Routing Views and will show where the harness item is located on the vehicle harness.

⇒ **Splice Packs**

- Links to individual harness routing view(s) within Harness Routing Views and will show where the harness item is located on the vehicle harness.
- Links to individual connector end view(s) within Splice Pack Connector End Views.

Master Electrical Schematic Icons

While the master electrical schematic icons list format has not changed, it will continue to include icons used in the vehicle schematics along with the message for the icon.

Master Electrical Schematic Icons

Master Electrical Schematic Icons

Icon	Icon Definition
	Warning: When performing service on or near the SIR components or the SIR wiring, the SIR system must be disabled. Refer to SIR Disabling and Enabling . Failure to observe the correct procedure could cause deployment of the SIR components, personal injury, or unnecessary SIR system repairs.
	Warning: When performing service on or near the pedestrian impact detection system (PIDS) components or the PIDS wiring, the PIDS must be disabled. Failure to observe the correct procedure could cause deployment of the PIDS components. Serious injury can occur. Failure to observe the correct procedure could also result in unnecessary PIDS repairs
	Warning: The high intensity discharge system produces high voltage and current. To reduce the risk of severe shocks and burns: • Never open the high intensity discharge system ballast or the arc tube assembly starter. • Never probe between the high intensity discharge system ballast output connector and the arc tube assembly. **Warning:** To help avoid personal injury, always treat the accessory power receptacle, accessory DC/AC power inverter module, AC circuit wires, and connectors as if AC high-voltage is present. **Danger:** Always perform the High Voltage Disabling procedure prior to servicing any High Voltage component or connection. Personal Protection Equipment (PPE) and proper procedures must be followed. The High Voltage Disabling procedure will perform the following tasks: • Identify how to disable high voltage. • Identify how to test for the presence of high voltage. • Identify condition under which high voltage is always present and personal protection equipment (PPE) and proper procedures must be followed. Failure to follow the procedures exactly as written may result in serious injury or death.
	Caution: The connector at the component cannot be disconnected or removed without damage to the component. If the connector is removed, the entire component with jumper harness must be replaced.
	Note: Twisted wires provide an effective shield that helps protect sensitive electronic components from electrical interference. In order to prevent electrical interference from degrading the performance of the connected components, you must maintain the proper specification when making any repairs to the twisted wires shown : • The wires must be twisted a minimum of 9 turns per 31 cm (12 in) as measured anywhere along the length of the wires. • The outside diameter of the twisted wires must not exceed 6.0 mm (0.25 in).

3820510

1. **Mouse-over:** None at this time.
2. **Hotspot Link to Information:** None at this time.

Schematic RPO Code List

The schematic RPO code list only includes RPOs shown in schematics and also includes the country groupings for the options. This list is in addition to the vehicle RPO Code List that is included in General Information.

Schematics RPO Code List

Schematics RPO Code List

RPO	Description	Country Group
A45	MEMORY-SEAT ADJUSTER, MIRROR, POWER, DRIVER, PERSONALIZATION	U.S.A., PR and USVI (MAH)
A6C	ADJUSTER PASS ST-MANUAL, 4 WAY, PWR VERT	U.S.A., PR and USVI (MAH),Canada (MBC)
AED	WINDOW REG PASS DR-POWER OPERATED, EXPRESS DOWN	China
AEF	WINDOW REG PASS DR-POWER OPERATED, EXPRESS UP/DOWN	U.S.A., PR and USVI (MAH),Canada (MBC),Mexico (MCX), China
AEQ	WINDOW-POWER OPERATED, RR DRS, EXPRESS DOWN	U.S.A., PR and USVI (MAH),Canada (MBC),Mexico (MCX)
AER	WINDOW-POWER OPERATED, RR DRS, EXPRESS UP/DOWN	China
AF6	CONTROL-SEAT, MASSAGE, DRIVER	China
AG1	ADJUSTER FRT ST-POWER, MULTI-DIRECTIONAL, DRIVER	U.S.A., PR and USVI (MAH),Canada (MBC),Mexico (MCX)
AG2	ADJUSTER PASS ST-POWER, MULTI-DIRECTIONAL	U.S.A., PR and USVI (MAH),Canada (MBC),Mexico (MCX)
APG	CONTROL-SEAT, POWER LUMBAR, LH	U.S.A., PR and USVI (MAH),Canada (MBC),Mexico (MCX)
APH	CONTROL-SEAT, POWER LUMBAR, RH	U.S.A., PR and USVI (MAH),Canada (MBC),Mexico (MCX)
ASV	EQUIPMENT-SENSOR AIR MOISTURE and W/S TEMP	U.S.A., PR and USVI (MAH),Canada (MBC),Mexico (MCX)
ATH	LOCK CONTROL, ENTRY-REMOTE ENTRY, EXTENDED RANGE, PASSIVE ENTRY, ALL DOORS	U.S.A., PR and USVI (MAH),Canada (MBC),Mexico (MCX)
ATS	Lock Control, Entry – Remote Entry, Standard Range, Passive Entry	China
AW7	RESTRAINT SYSTEM-SEAT, INFLATABLE, DRIVER AND PASS FRT, FRT SEAT SIDE AND RR SEAT SIDE, ROOF SIDE	U.S.A., PR and USVI (MAH),Canada (MBC)
BTM	SWITCH-ENGINE START, KEYLESS	U.S.A., PR and USVI (MAH),Canada (MBC),Mexico (MCX)
C67	HVAC SYSTEM-AIR CONDITIONER FRT, ELECTRONIC CONTROLS	U.S.A., PR and USVI (MAH),Canada (MBC),Mexico (MCX)
CE1	WIPER SYSTEM-WINDSHIELD, PULSE, MOISTURE SENSITIVE	China
CE4	WASHER-HEADLAMP, HIGH PRESSURE	China
CF5	ROOF-SUN, GLASS, SLIDING, ELEC	U.S.A., PR and USVI (MAH),Canada (MBC),Mexico (MCX)
CJ2	HVAC SYSTEM-AIR CONDITIONER FRT, AUTO TEMP CONT, AUX TEMP CONT	U.S.A., PR and USVI (MAH),Canada (MBC),Mexico (MCX)
CZ2	COUNTRY-CHINA	China
DD8	MIRROR I/S R/V-LT SENSITIVE	U.S.A., PR and USVI (MAH),Canada (MBC),Mexico (MCX)
EF7	COUNTRY-UNITED STATES OF AMERICA (USA)	U.S.A., PR and USVI (MAH)
F45	CHASSIS-CONTINUOUSLY VARIABLE REAL TIME DAMPING	U.S.A., PR and USVI (MAH),Canada (MBC)
FHS	VEHICLE FUEL-GASOLINE E85	U.S.A., PR and USVI (MAH),Canada (MBC),Mexico (MCX)
HP6	HYBRID PROPULSION-ELECTRIC, PARALLEL, 14KW CONTINUOUS POWER	U.S.A., PR and USVI (MAH),Canada (MBC)
J71	BRAKE PARKING-POWER OPERATED	U.S.A., PR and USVI (MAH),Canada (MBC),Mexico (MCX)
KA1	HEATER SEAT FRT-DRVR and PASS	U.S.A., PR and USVI (MAH),Canada (MBC),Mexico (MCX)
KD4	RECEPTACLE-ELECTRICAL, FRT CONSOLE	U.S.A., PR and USVI (MAH),Canada (MBC),Mexico (MCX)
KI6	RECEPTACLE-ELECTRICAL, FRT CONSOLE RR 110 VOLT	U.S.A., PR and USVI (MAH),Canada (MBC),Mexico (MCX)
KRJ	CONTROL-CONSOLE, INFOTAINMENT, REDUNDANT CONTROLS, JOYSTICK	U.S.A., PR and USVI (MAH),Canada (MBC),Mexico (MCX)
KTA	AUDIO INTERFACE-	China
KU1	VENTILATED SEAT DRVR-FRONT	U.S.A., PR and USVI (MAH)
KU3	VENTILATED SEAT PASS-FRONT	U.S.A., PR and USVI (MAH)
LAF	ENGINE-GAS, 4 CYL, 2.4L, SIDI,DOHC, VVT, ALUM, GM - DO NOT USE AFTER 2013, USE LEA	China
LDK	ENGINE-GAS, 4 CYL, 2.0L, DI, DOHC, TURBO-HO, VARIABLE CAMSHAFT PHASING - DO NOT USE AFTER 2013, USE LHU	China
LHU	ENGINE-GAS, 2.0L, SIDI, L4, DOHC TURBO, E85 MAX, ALUM	U.S.A., PR and USVI (MAH),Canada (MBC),Mexico (MCX)
LLU	ENGINE-GAS, 4 CYL, 1.6L, MFI, DOHC, TURBO, PT-JV, 132KW	China
LTD	ENGINE-GAS, 4 CYL, 2.0L, MFI, ALUM, DOHC, SGM	China
LUK	ENGINE-GAS, 4 CYL, 2.4L, DI, ALUM, DOHC, BAS, ECOTEC	U.S.A., PR and USVI (MAH),Canada (MBC)
MDK	TRANSMISSION-AUTO 6 SPD, AISIN-WARNER, A6-AF40, ELECTRONIC, GEN2	U.S.A., PR and USVI (MAH),Canada (MBC)
MH8	TRANSMISSION-AUTO 6 SPD, HMD, X23F	U.S.A., PR and USVI (MAH),Canada (MBC)
MHH	TRANSMISSION-AUTO 6 SPD, HMD, GM, BAS+, 6T40, HYBRID, FWD	U.S.A., PR and USVI (MAH),Canada (MBC)
MHK	TRANSMISSION-AUTO 6 SPD, 6T50	U.S.A., PR and USVI (MAH),Canada (MBC),Mexico (MCX)
MR6	TRANSMISSION-MAN 6 SPD, OPEL, 83MM, 3.92 1ST, 0.62 6TH (F40 WR), REDUCE HELIX	U.S.A., PR and USVI (MAH),Canada (MBC)
NJ1	STEERING-POWER, NON-VARIABLE RATIO, ELECTRIC	U.S.A., PR and USVI (MAH),Canada (MBC)
NU6	EMISSION SYSTEM-CALIFORNIA, PZEV	U.S.A., PR and USVI (MAH)
NV7	STEERING-POWER, VARIABLE EFFORT	U.S.A., PR and USVI (MAH),Canada (MBC),Mexico (MCX)
NXC	STEERING-POWER, VARIABLE EFFORT, REDUCED RACK TRAVEL	U.S.A., PR and USVI (MAH),Canada (MBC)
T4A	HEADLAMPS-HALOGEN	U.S.A., PR and USVI (MAH),Canada (MBC)

3820023

1. **Mouse-over:** None at this time.
2. **Hotspot Link to Information:** None at this time.

Electrical Schematic Symbols

Voltage Indicators

Symbol	Description
B+ 1988677	Battery Voltage
IGN 0 1988679	Ignition Switch– Off Position
IGN I 1988682	Ignition Switch– Accessory Position
IGN II 1988686	Ignition Switch– Run Position
IGN III 1988691	Ignition Switch– Start Position

General Icons

Symbol	Description
LOC 1990537	Master Component List Icon This icon is used on the schematic to link to the Master Electrical Component List.
DESC 1990538	Description and Operation Icon This icon is used on the schematic to link to the Description and Operation of that particular system.

Symbol	Description
1988674	Computer Programming Icon This icon is used on the schematic to link to Control Module References, which identifies which components need programming upon replacement.
1990541	Next Schematic Page Icon This icon is used on the schematic to navigate to the next schematic in the subsystem.
1990542	Previous Schematic Page Icon This icon is used on the schematic to navigate to the previous schematic in the subsystem.
1988667	Supplemental Inflatable Restraint (SIR) or Supplemental Restraint System (SRS) Icon This icon is used to alert the technician that the system contains SIR/SRS components that require certain precautions before servicing.

Symbol	Description
1988670	Information Icon This icon is used to alert the technician that there is additional information that will aid in servicing a system.
1988672	Danger Icon This icon is intended to alert the technician that a component within the system contains labeling with the same icon. This icon is used when a source component has potential for 60 volts DC or greater or has potential for 42 volts AC or greater.
1988673	High Voltage Icon This icon is intended to alert the technician that a component within the system contains labeling with the same icon. This icon is used when a component/circuit has potential for 60 volts DC or greater or has potential for 42 volts AC or greater.

Symbol	Description
1990543	Caution Icon This icon is used to advise the technician to use caution when servicing this component. This icon may be used when a component/circuit has a voltage range potential between 30-60 volts DC or 15-42 volts AC.
1988675	Functional Serial Data Communication This icon is used to show the technician that the serial data circuit detail is shown incomplete. It also provides an active link to the Data Communication Schematics were the circuit is shown complete.

Switch Position Icons

Symbol	Description
1989016	Generic Up Arrows
1990554	Generic Down Arrows

Symbol	Description
1990555	Generic Left Arrows
1990556	Generic Right Arrows
1990557	Generic Express Down Arrows
1990558	On/Off Icon

Symbol	Description
1990559	Generic Lock Icon
1990560	Generic Unlock Icon
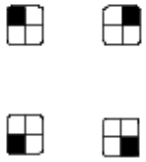 1989018	Generic Window Switch Positions– 4 Door
1989020	Generic Window Switch Positions– 2 Door

Module Circuit Function Icons

Symbol	Description
1988774	I/O Pull-Down Resistors (−)
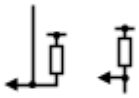 1990567	I/O Pull-Up Resistors (+)
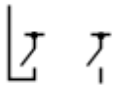 1988775	I/O High-Side Drive Switch (+)
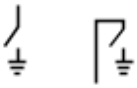 1990568	I/O Low-Side Drive Switch (−)

Symbol	Description
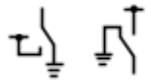 1990570	I/O Bidirectional Switch (+/−)
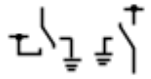 6535609	I/O Bidirectional Switch (+/−) Neutral State
1990571	Pulse-Width Modulation Symbol
B+ 1990573	Battery Voltage

Symbol	Description
IGN 1990574	Ignition Voltage
5V 1990576	Voltage Reference
5V AC 1990577	A/C Voltage
1988986	Low Reference

Symbol	Description
1990578	Ground
1990579	Serial Data
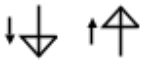 1988973	Antenna Signal– In
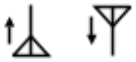 1988974	Antenna Signal– Out

Symbol	Description
2161152	Brake Apply
5371975	Bulb Out
6659366	Approach Lighting Animation
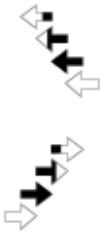 6659367	Sequential Turn Signal Animation

Harness Components

Symbol	Description
1988731	Fuse
1988733	Fuse Supplied by a Relay
1988740	Circuit Breaker
1988745	Fusible Link

Symbol	Description
1988987	Ground
1988746	Case Ground
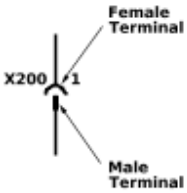 1988977	Inline Harness Connector
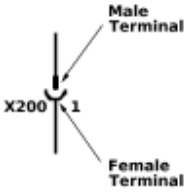 1990974	Inline Harness Connector

Symbol	Description
1990975	Pigtail Connection
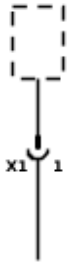 1990976	Pigtail Connection
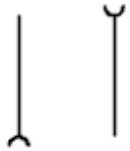 1990977	Provisional or Diagnostic Connector
1990978	Blunt Cut Wire

Symbol	Description
1988980	Incomplete Physical Splice
1988981	Complete Physical Splice– 2 Wires
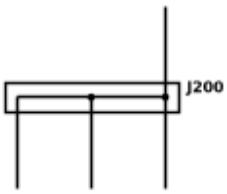 1988982	Complete Physical Splice– 3 or more wires
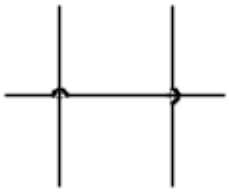 1990979	Wire Crosses

Symbol	Description
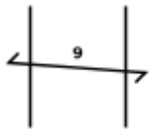 1988988	Twisted Wires
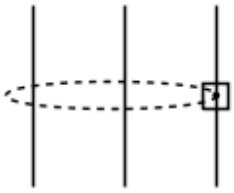 1988990	Shield
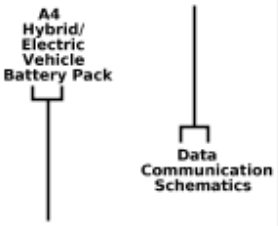 1990980	Circuit References
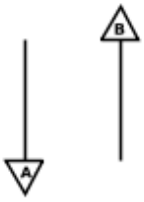 1990981	Circuit Continuation Arrowheads

Symbol	Description
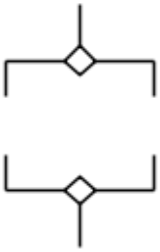 1988983	Option Breakpoint
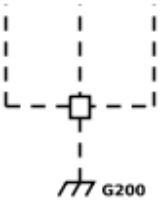 1988984	Ground Circuit Connection
1988985	Connector Shorting Clip

Component Parts

Symbol	Description
1988694	Partial Component When a component is represented in a dashed box, the component or its wiring is not shown in its entirety.
1988698	Entire Component When a component is represented in a solid box the component or its wiring is shown in its entirety.
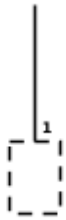 1988712	Connector Directly Attached to Component
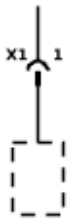 1988715	Pigtail Connector

Switches and Relays

Symbol	Description
1991015	Accessory Power Outlet
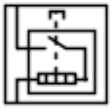 1991016	Cigar Lighter
1988991	Switch– 2 Position Normally Open
1988992	Switch– 2 Position Normally Closed

Symbol	Description
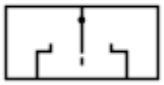 1988993	Switch– Rocker
1991017	Switch– Contact Plate (1 Wire)
1988994	Switch– Contact Plate (2 Wire)
1991018	Switch– 3 Position

Symbol	Description
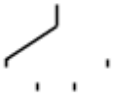 1988995	Switch– 4 Position
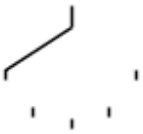 1991019	Switch– 5 Position
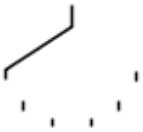 1991021	Switch– 6 Position
1988997	Switch Actuator– Push (Momentary)

Symbol	Description
1988998	Switch Actuator– Push (Latching)
1988999	Switch Actuator– Pull (Momentary)
1989000	Switch Actuator– Pull (Latching)
1989001	Switch Actuator– Rotate (Momentary)

Symbol	Description
1989002	Switch Actuator– Rotate (Latching)
1989003	Switch Actuator– Slide (Momentary)
1989004	Switch Actuator– Slide (Latching)
1989007	Switch Actuator– Pressure (Momentary)

Symbol	Description
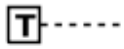 1989010	Switch Actuator– Temperature (Momentary)
1989013	Switch Actuator– Volume (Latching)
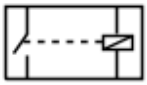 1988975	4-Pin Single Pole/Throw Relay– Normally Open
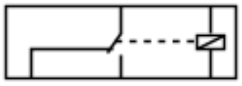 1990539	5-Pin Relay– Normally Closed

Devices and Sensors

Symbol	Description
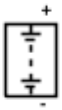 1988751	Battery
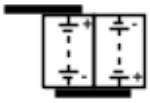 1988753	Battery Assembly– Hybrid
1988717	Single Filament Light Bulb
1988719	Double Filament Light Bulb

Symbol	Description
1988722	Light Emitting Diode (LED)
1988725	Photo Sensor
1990988	Gauge
1988776	Diode

Symbol	Description
1988748	Capacitor
1988755	Resistor
1988759	Variable Resistor
1990991	Variable Resistor– NTC

Symbol	Description
1990992	Breakable Wire
1988778	Heating Element
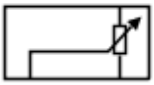 1988771	Position Sensor
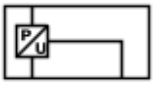 1988773	Pressure Sensor

Symbol	Description
1990993	Knock Sensor
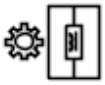 1990994	Inductive Type Sensor– 2-Wire
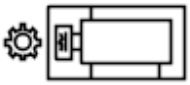 1990996	Inductive Type Sensor– 3-Wire
1990998	Hall Effect Sensor– 2-Wire

Symbol	Description
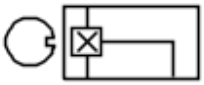 1990999	Hall Effect Sensor– 3-Wire
1991000	Oxygen Sensor– 2-Wire
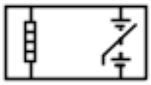 1991001	Heated Oxygen Sensor– 4-Wire
1988970	Solenoid– Actuator

Symbol	Description
1988971	Solenoid– Valve
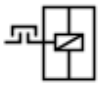 1988972	Clutch
1988779	Motor
1991003	Motor with PTC

Symbol	Description
1988729	Antenna
1991005	Speaker
1991006	Horn
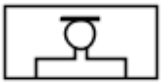 1991007	Microphone

Symbol	Description
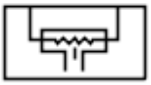 1991008	Airbag
1991009	SIR Coil
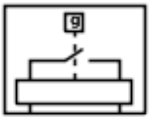 1991010	SIR Impact Sensor

Power Distribution Schematics (X50B Battery Distribution Engine Compartment Fuse Block)

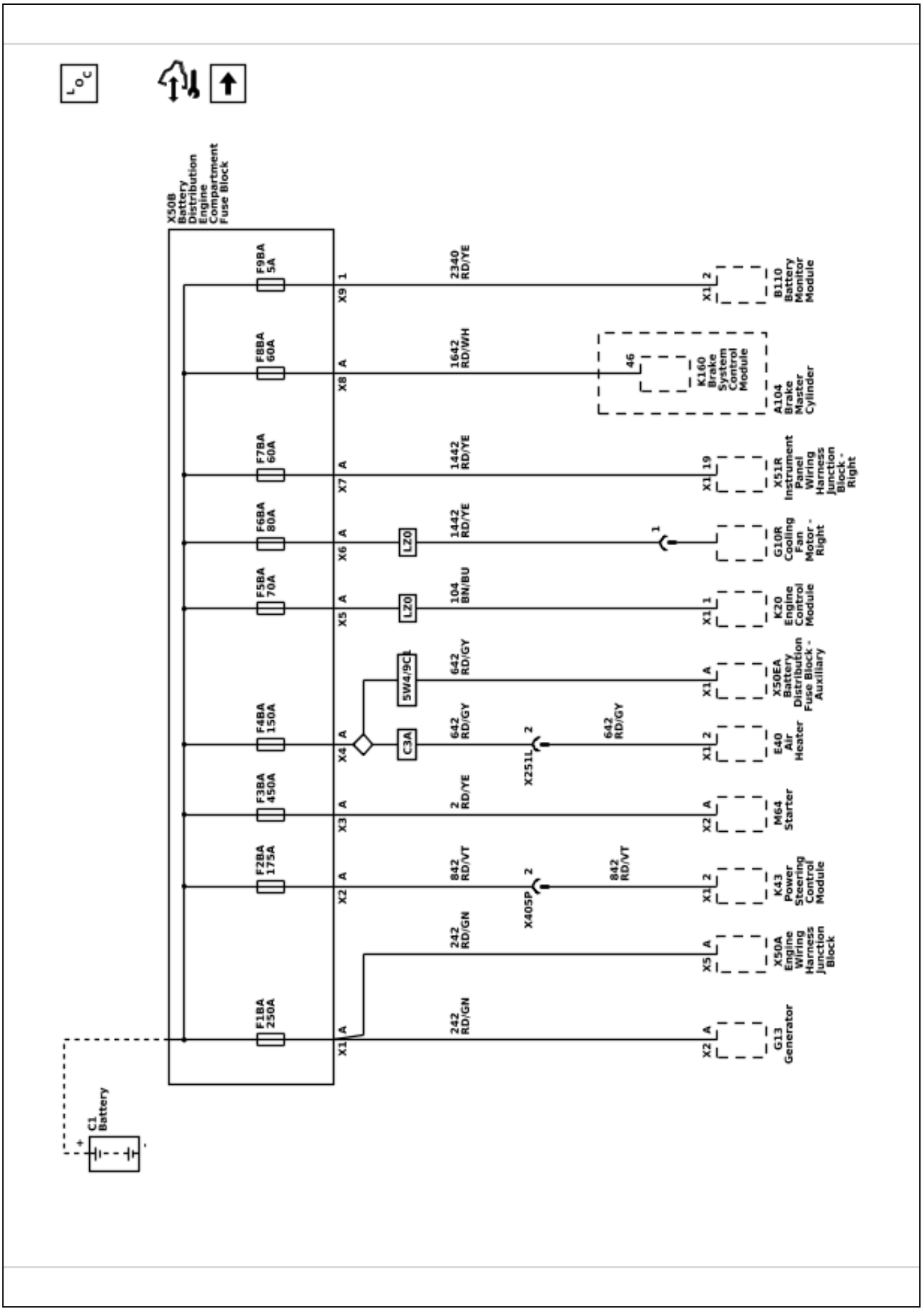

Power Distribution Schematics (X50A Engine Wiring Harness Junction Block - B+ Bus 1 of 2)

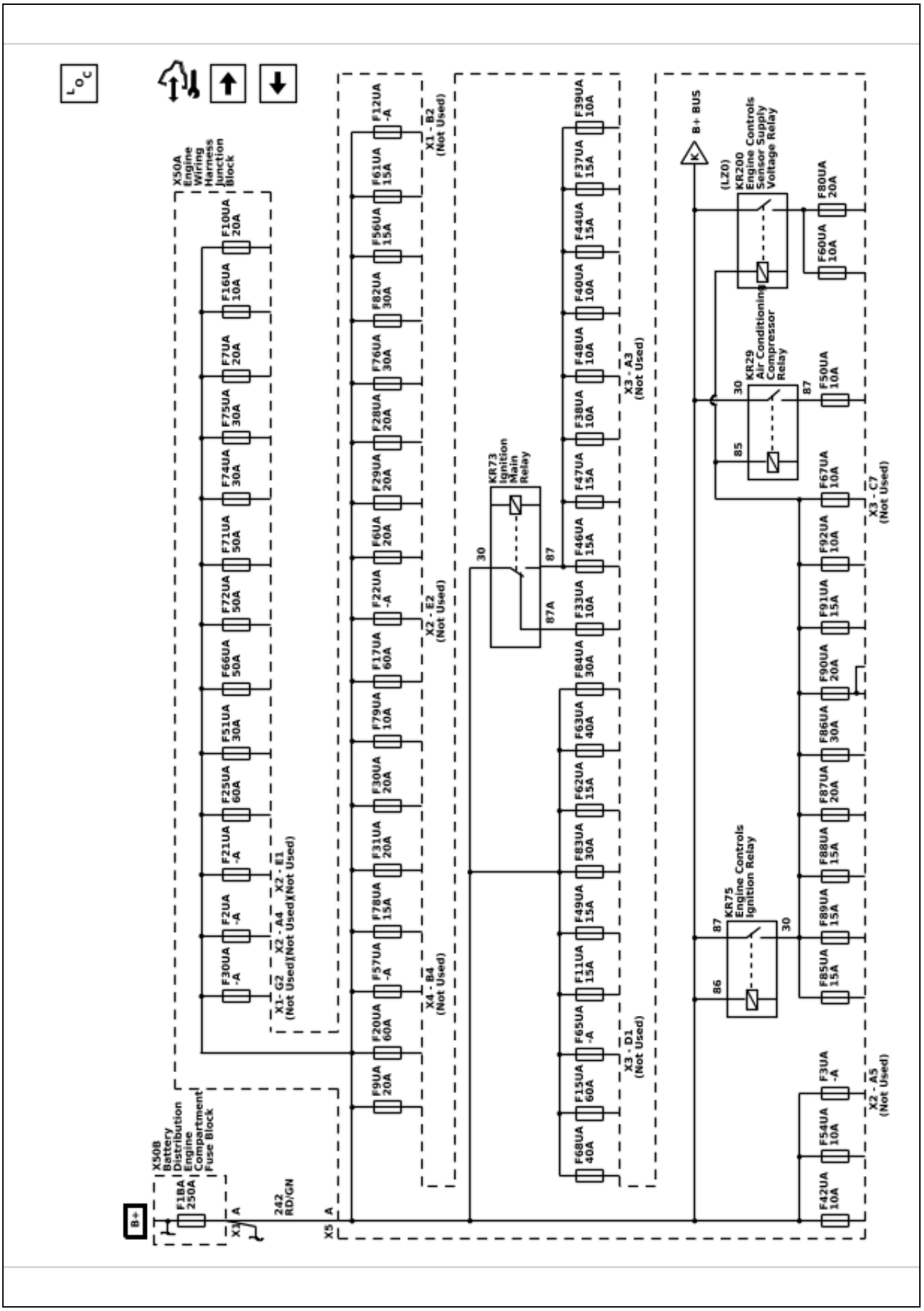

6613443

Power Distribution Schematics (X50A Engine Wiring Harness Junction Block - B+ Bus 2 of 2)

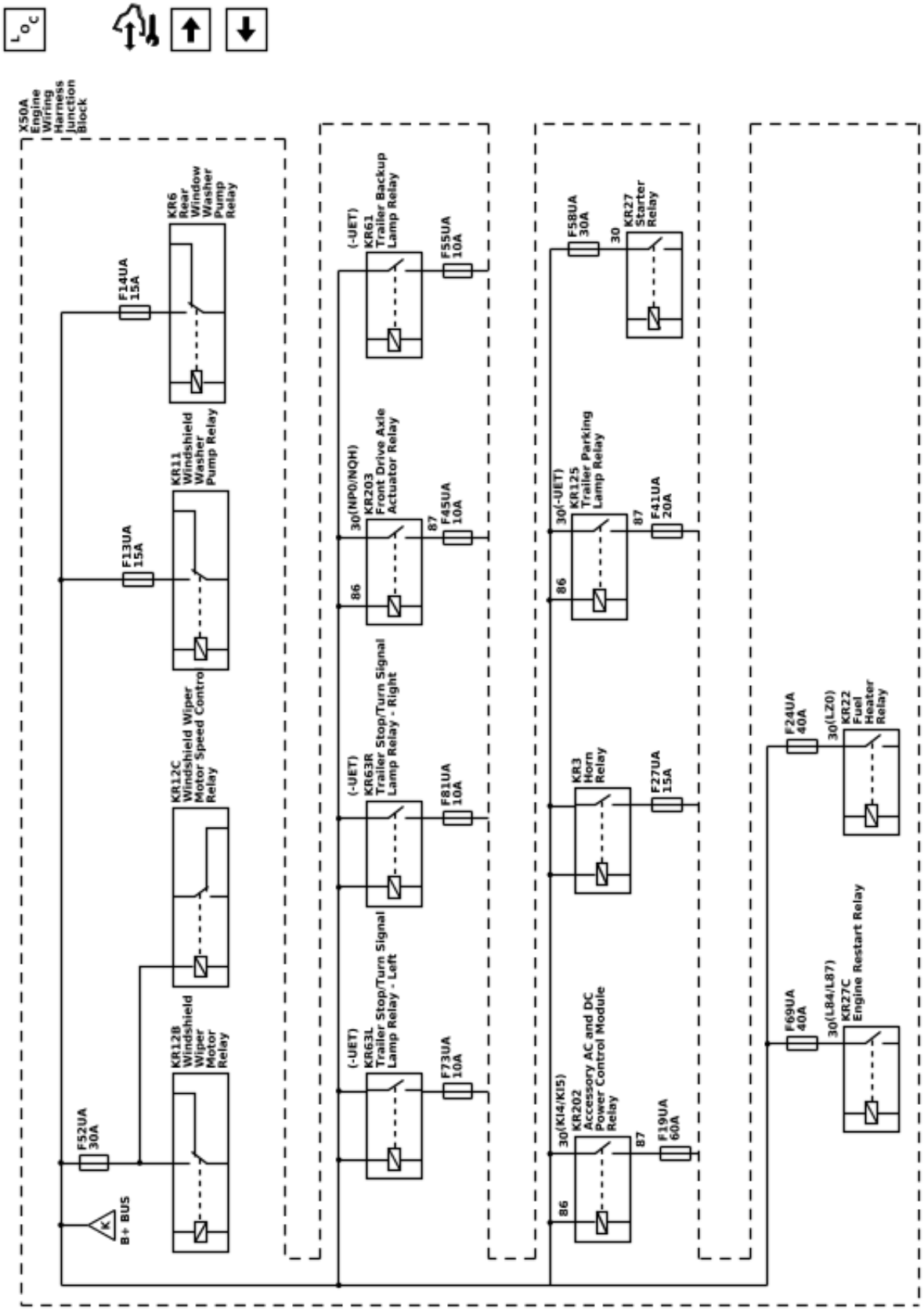

Power Distribution Schematics (F10UA, F11UA, F15UA, F16UA, F17UA, F20UA, and F25UA Fuses)

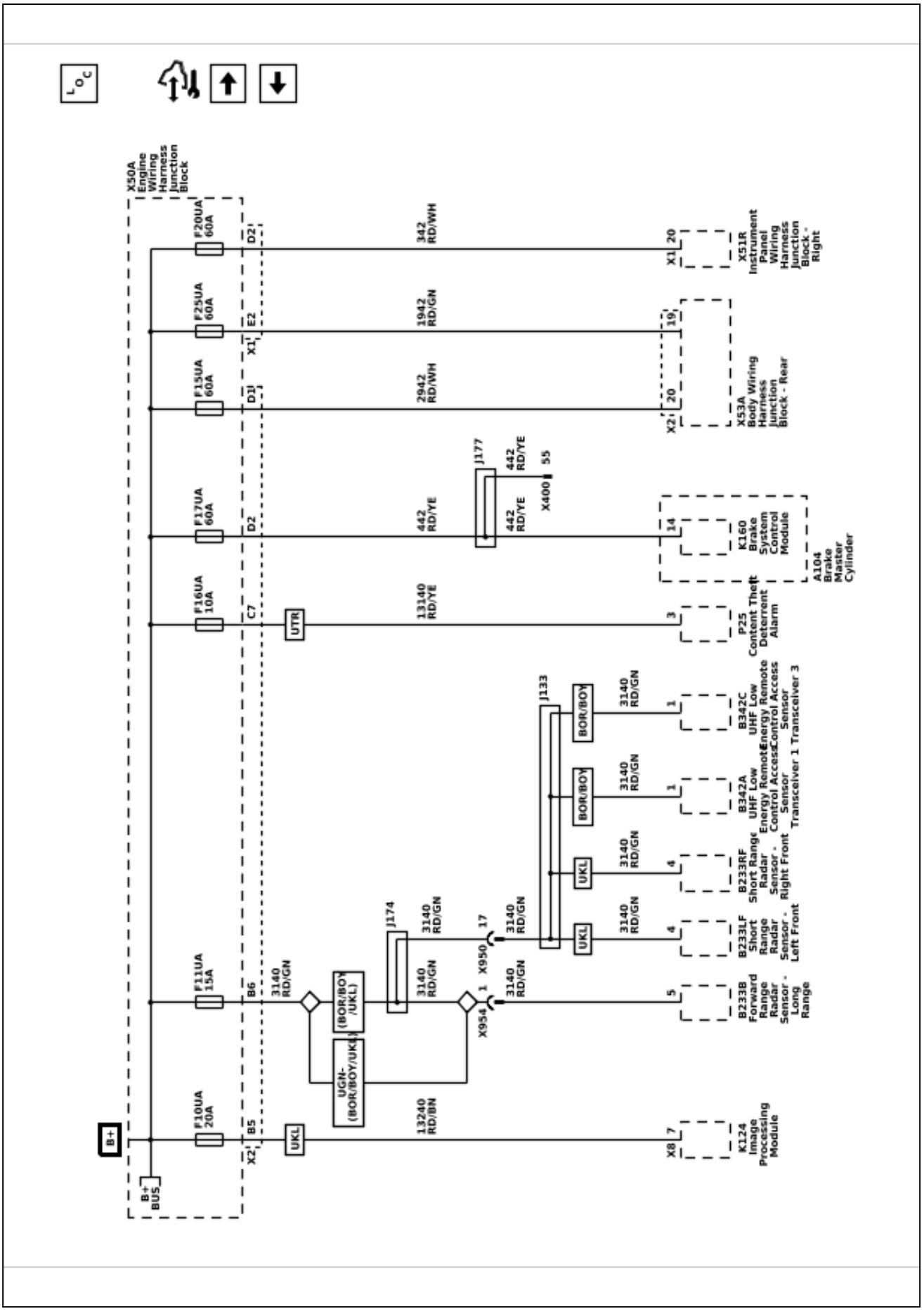

6613448

Power Distribution Schematics (F19UA, F27UA, F41UA, F45UA, and F49UA Fuses)

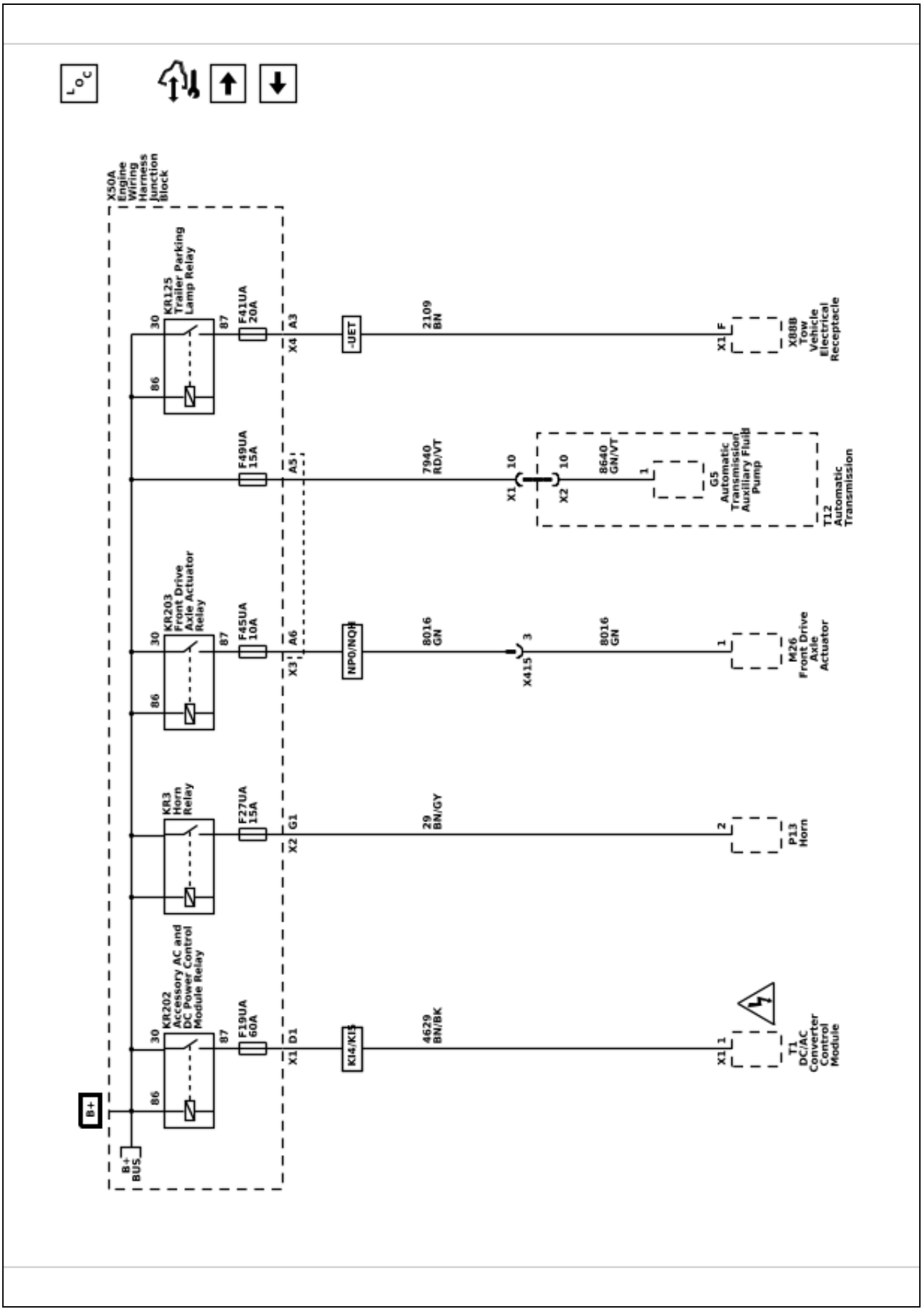

Power Distribution Schematics (F28UA, F29UA, F42UA, F51UA, F54UA, F56UA, F61UA, F62UA, F68UA, and F75UA Fuses)

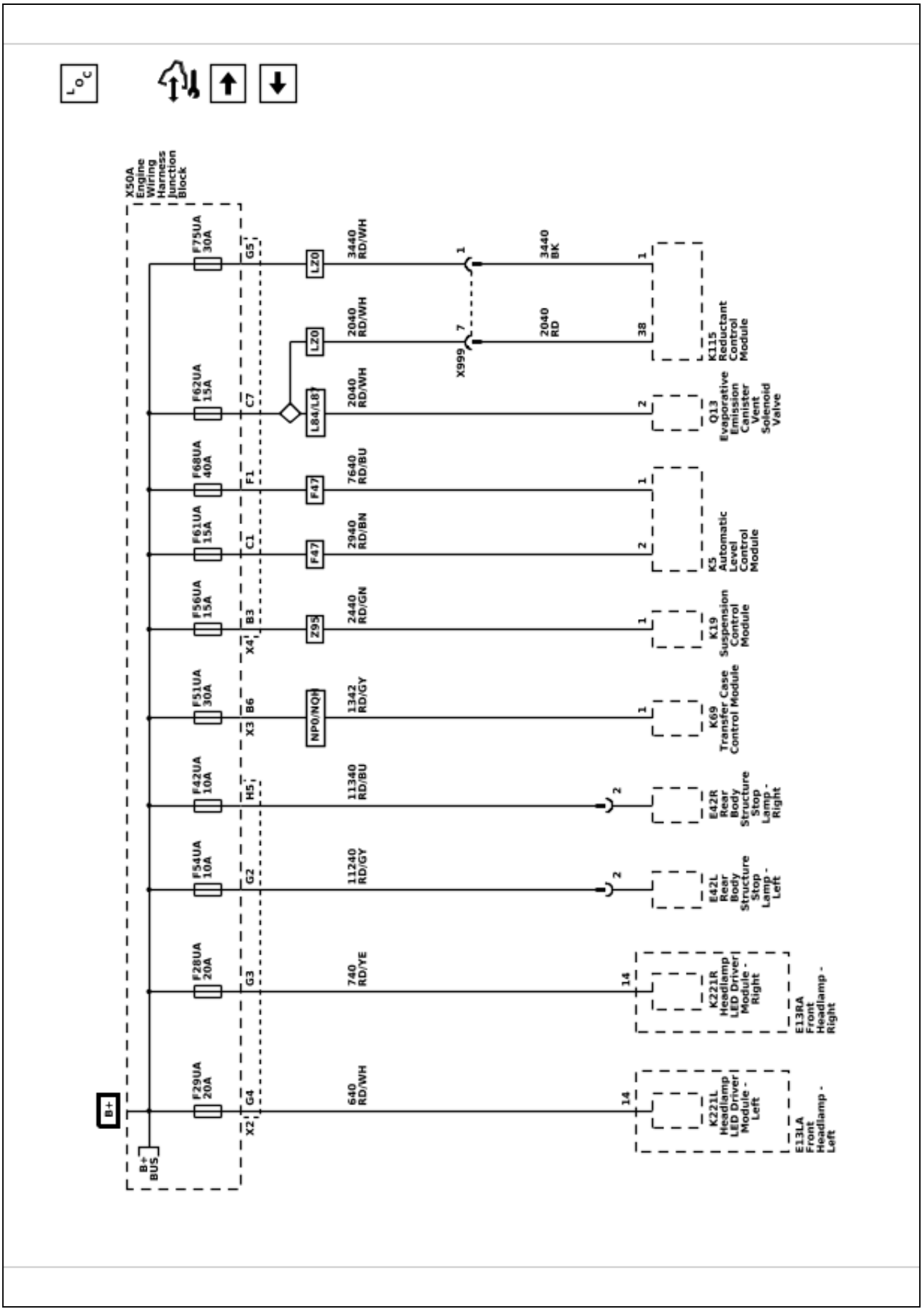

Power Distribution Schematics (F33UA, F37UA, F38UA, and F39UA Fuses)

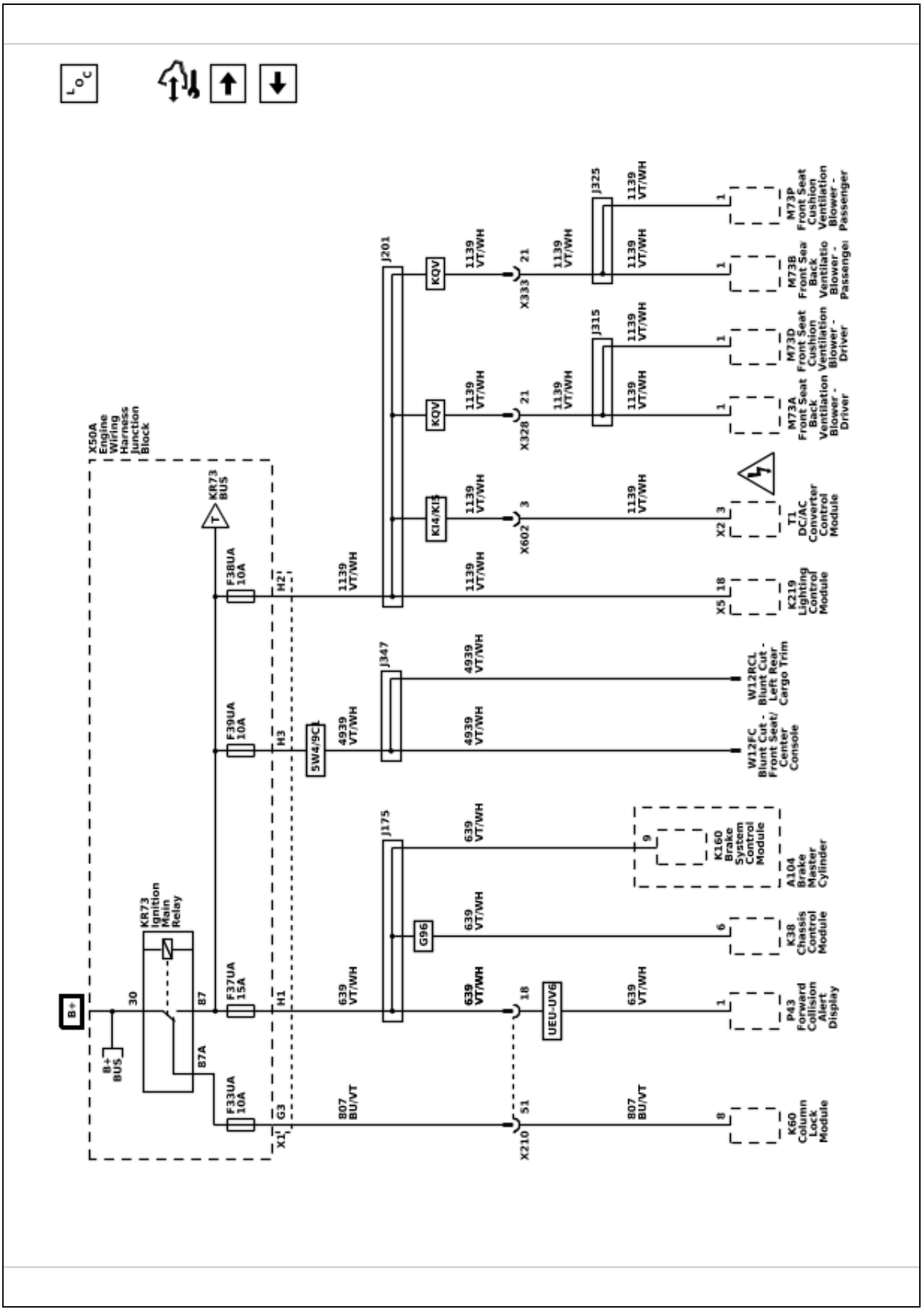

Power Distribution Schematics (F40UA, F44UA, F46UA, and F47UA Fuses)

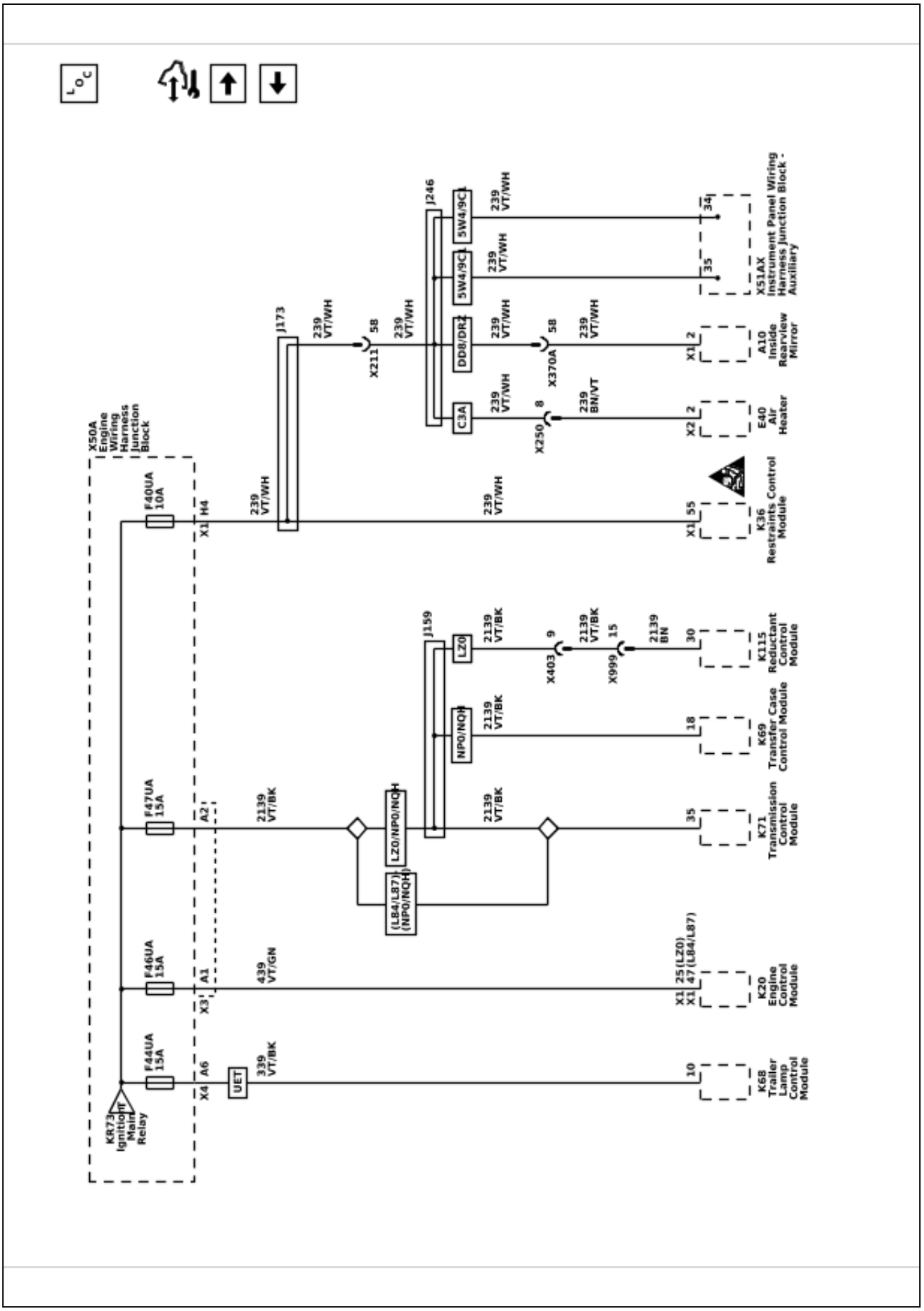

Power Distribution Schematics (F50UA, F55UA, F63UA, F66UA, F71UA, F72UA, F73UA, and F81UA Fuses)

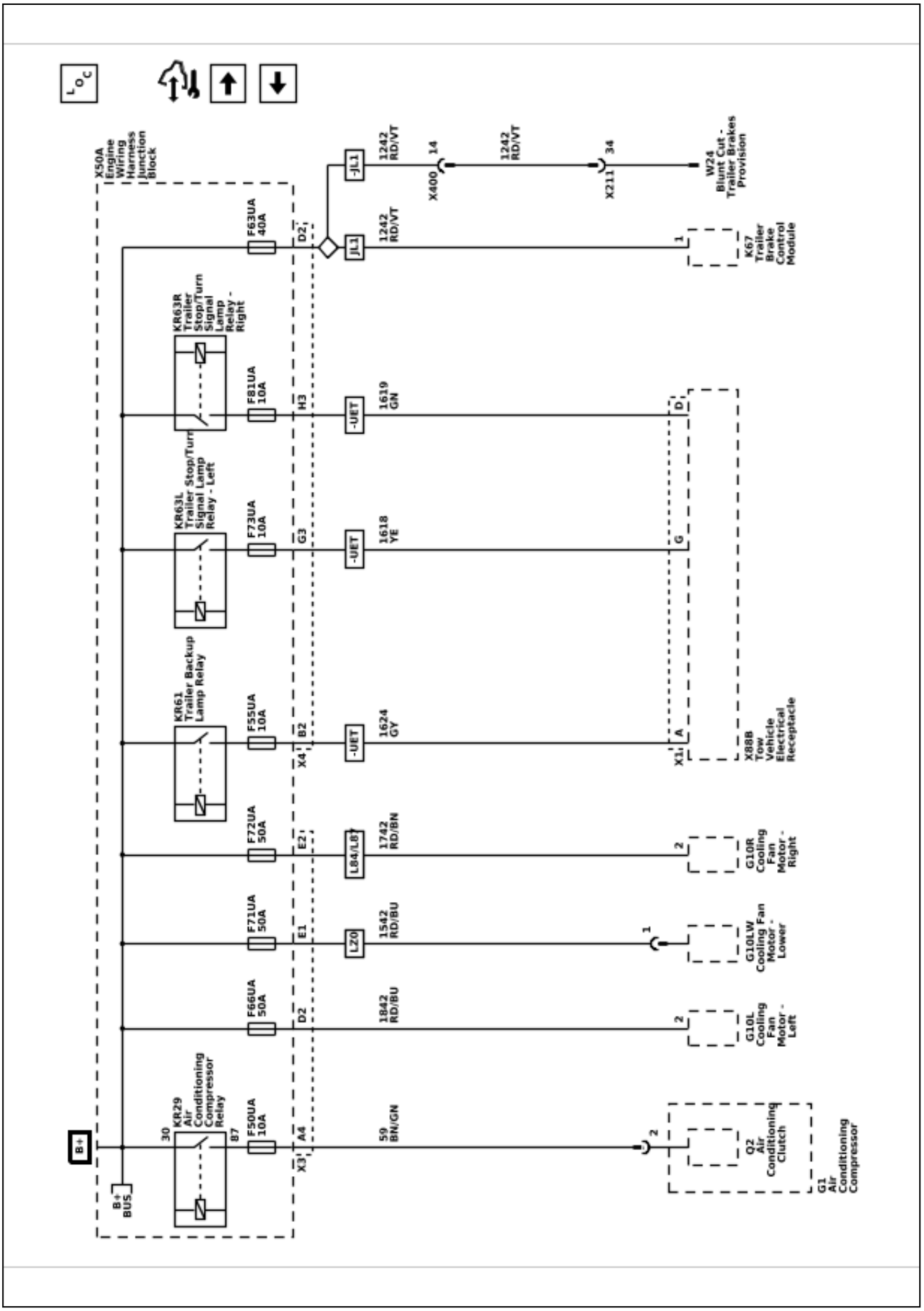

Power Distribution Schematics (F60UA and F80UA Fuses (LZ0))

6613452

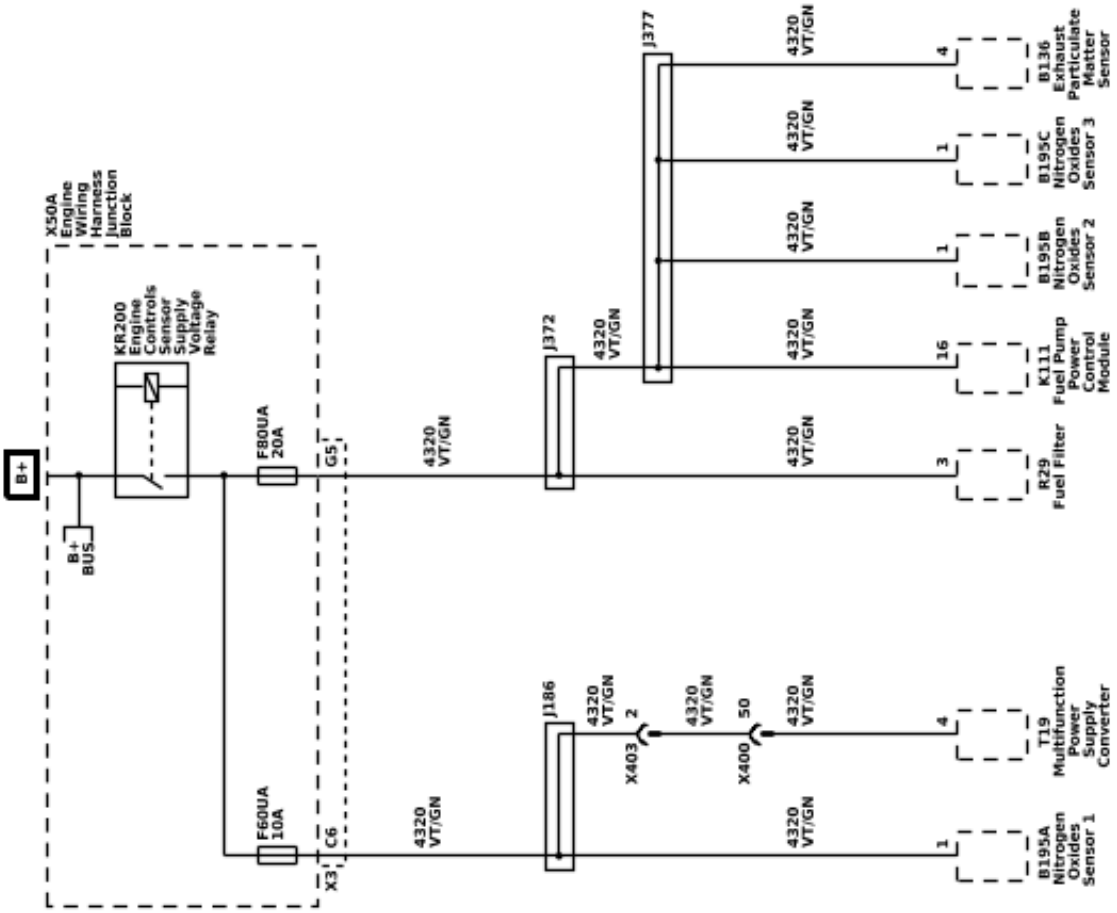

6613447

Power Distribution Schematics (F74UA, F76UA, F78UA, F79UA, F82UA, F83UA, and F84UA Fuses)

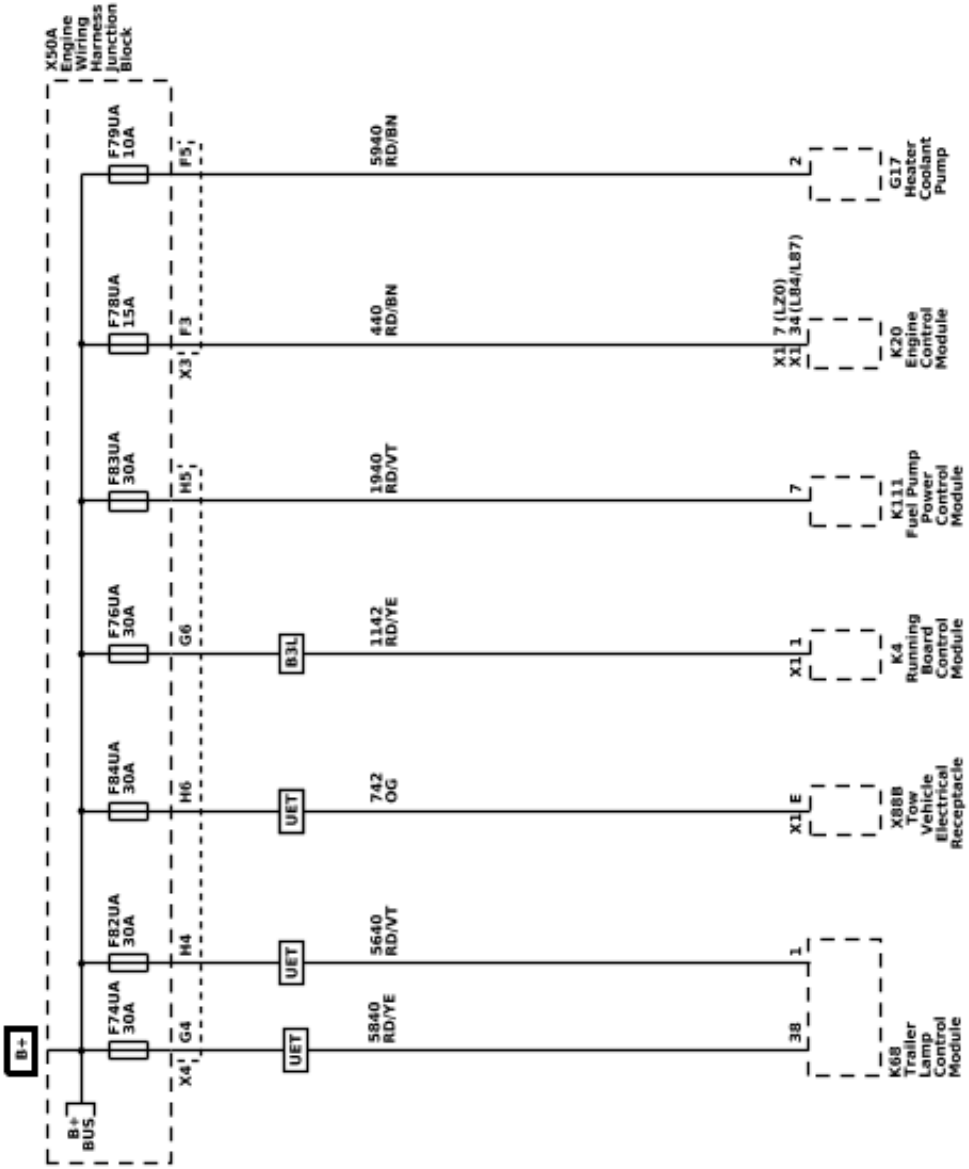

Power Distribution Schematics (F85UA, F86UA, F88UA, F89UA, and F91UA Fuses)

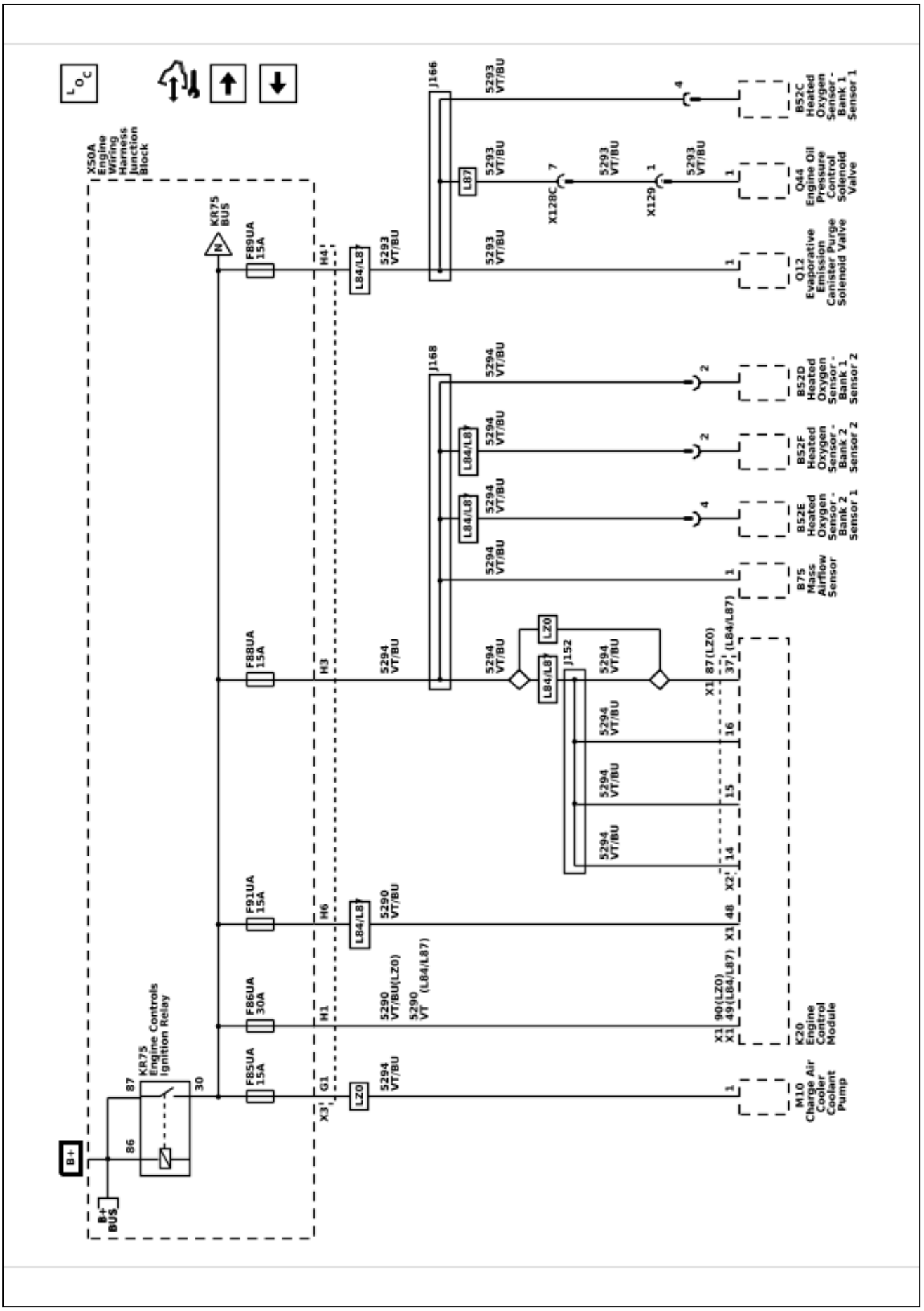

Power Distribution Schematics (F87UA, F90UA, and F92UA Fuses)

6613454

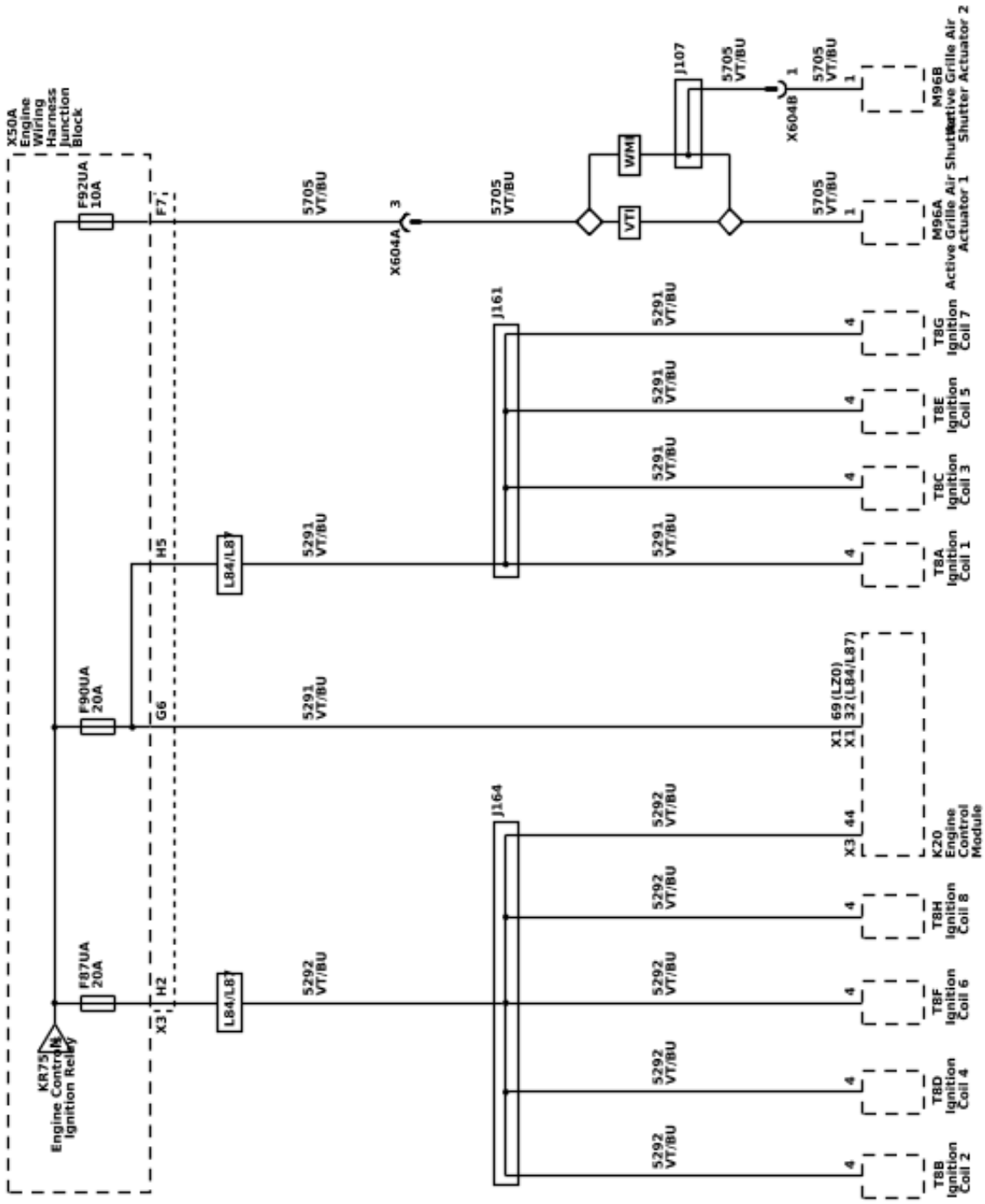

6613463

Power Distribution Schematics (X50EA Battery Distribution Fuse Block - Auxiliary (5W4 / 9C1))

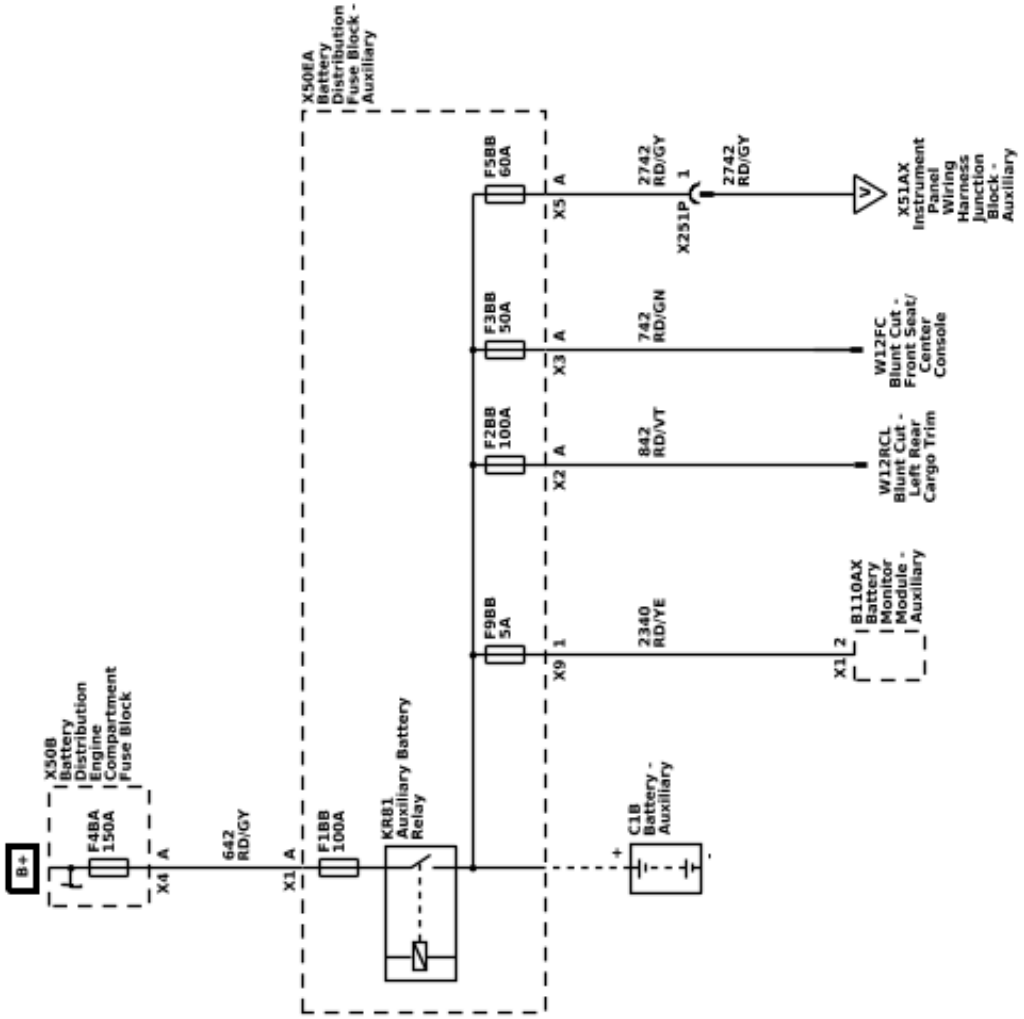

6613455

Power Distribution Schematics (X51AX Instrument Panel Wiring Harness Junction Block - Auxiliary (5W4 / 9C1))

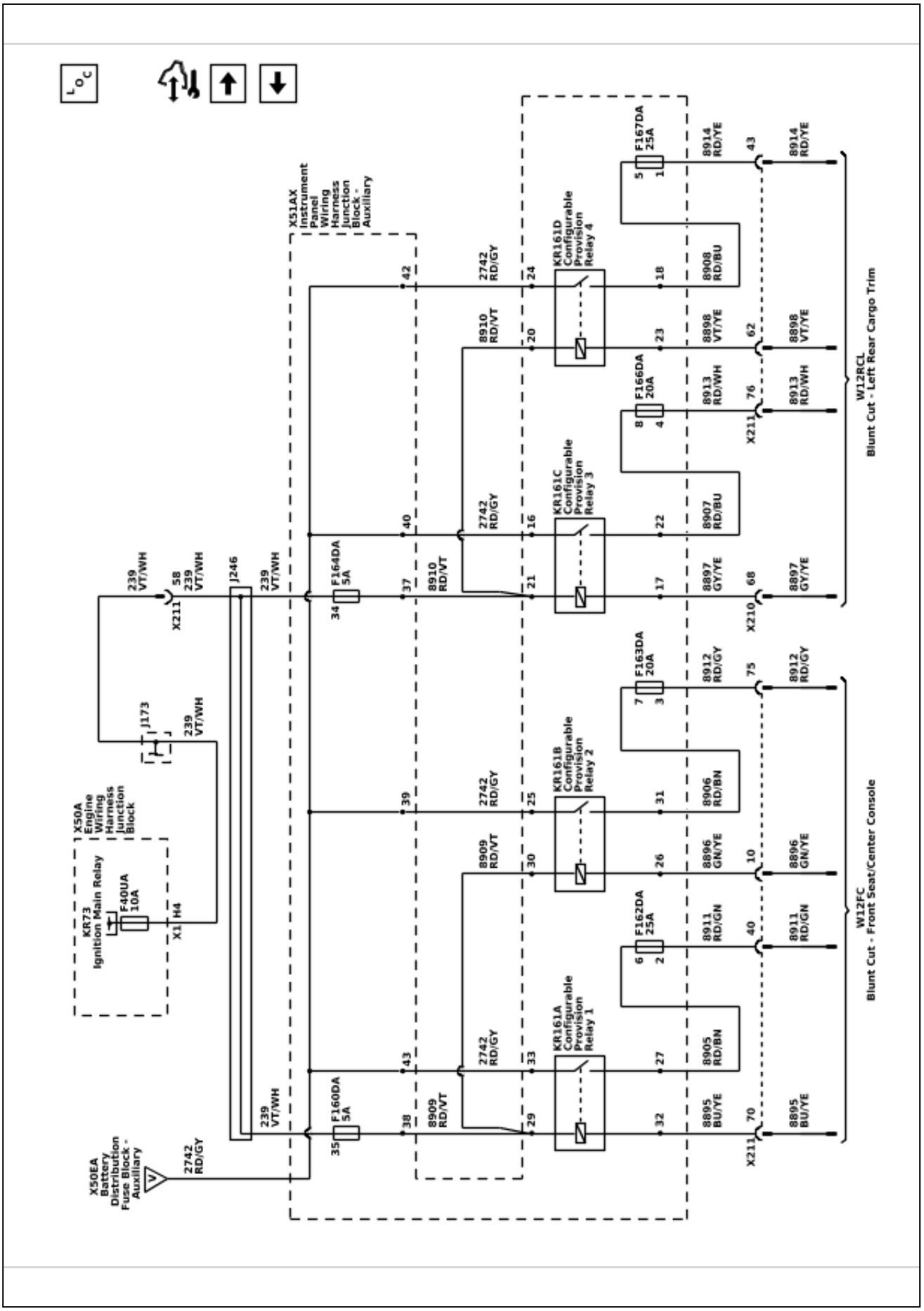

Power Distribution Schematics (X51R Instrument Panel Wiring Harness Junction Block - Right - B+ Bussing 1 of 2)

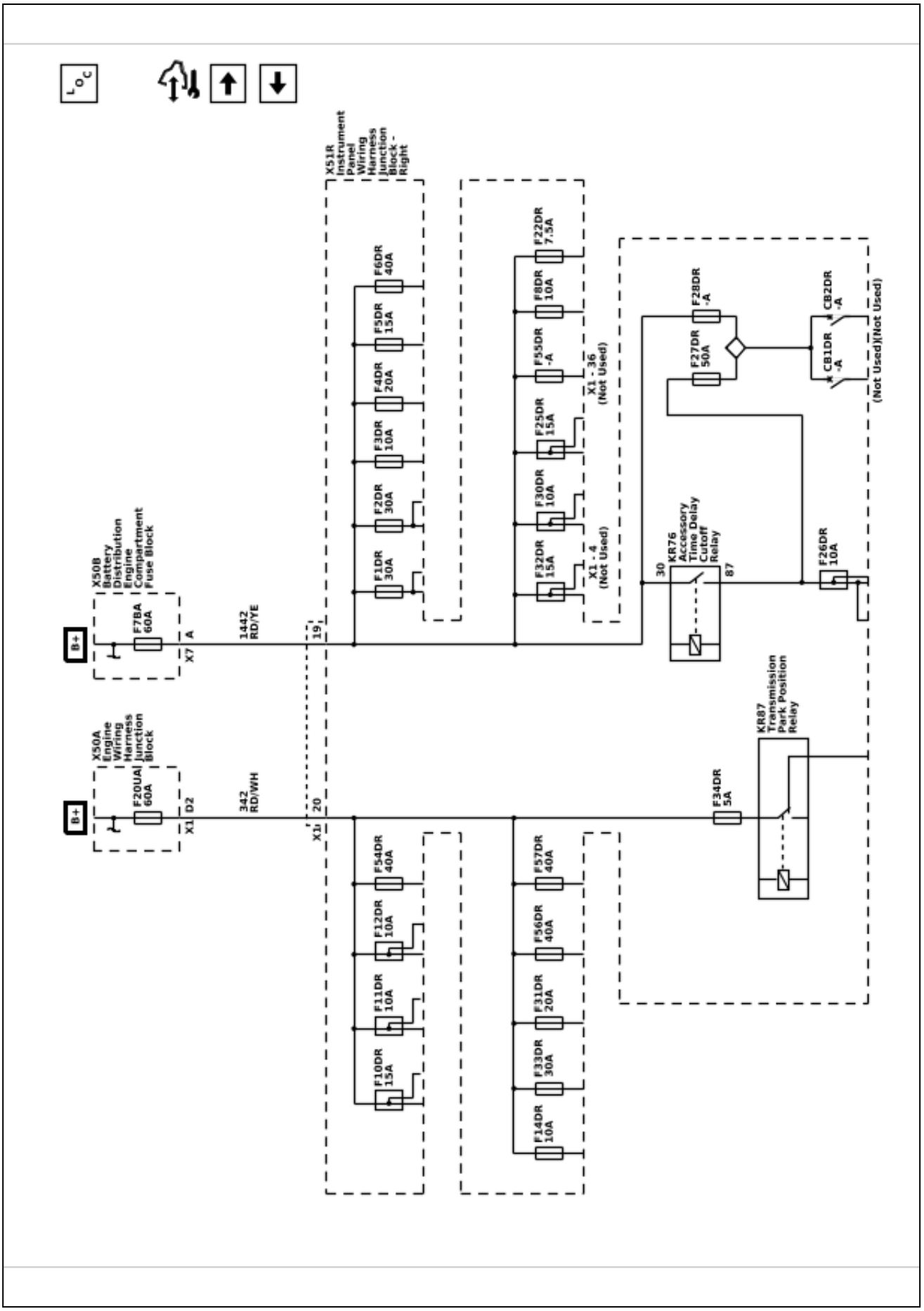

6613457

Power Distribution Schematics (X51R Instrument Panel Wiring Harness Junction Block - Right - B+ Bussing 2 of 2)

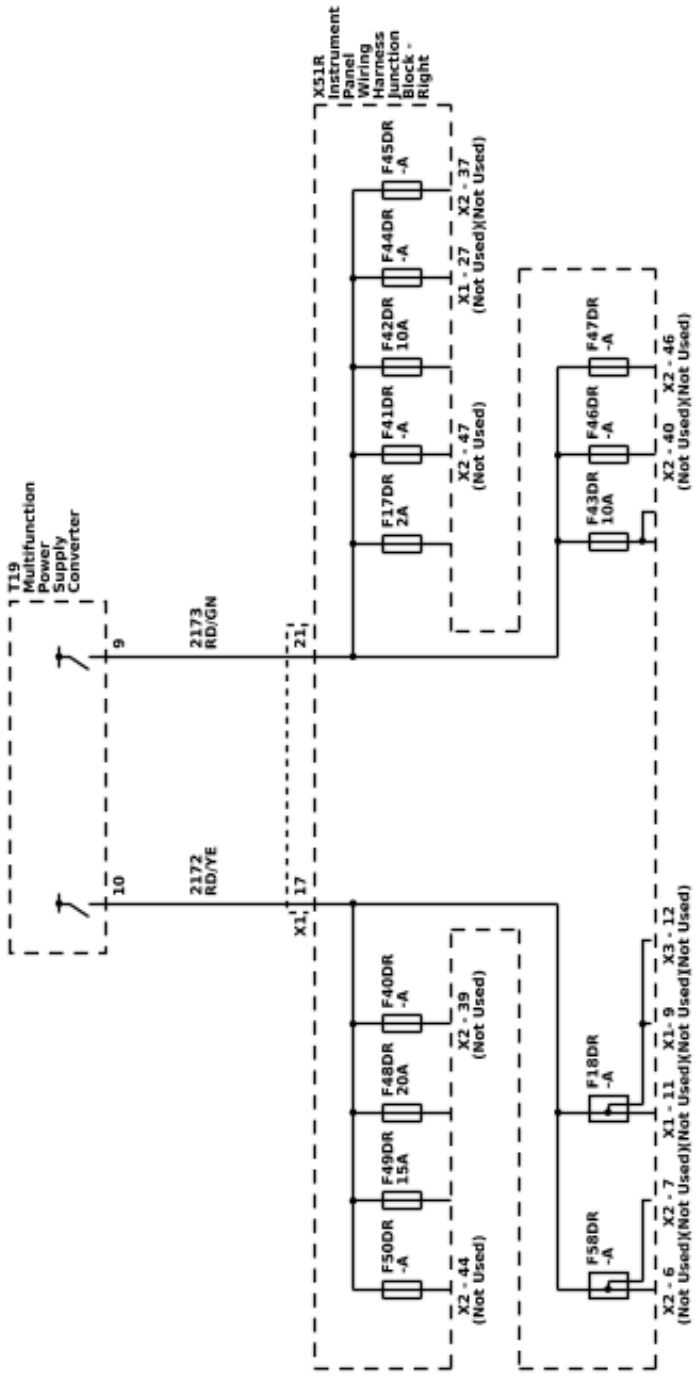

Power Distribution Schematics (F1DR, F2DR, F3DR, F10DR, and F11DR Fuses)

6613460

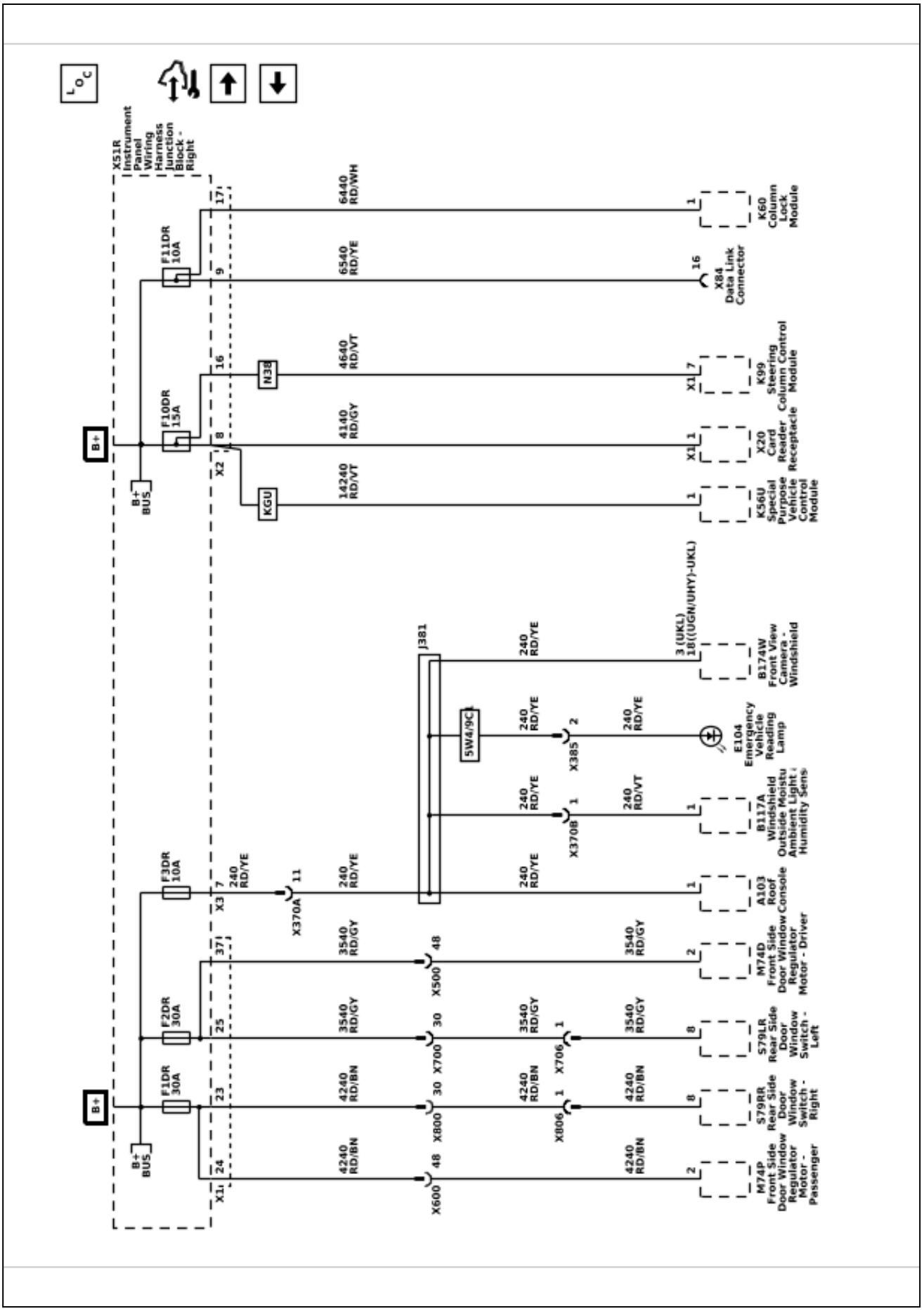

Power Distribution Schematics (F5DR, F6DR, F8DR, F22DR, and F25DR Fuses)

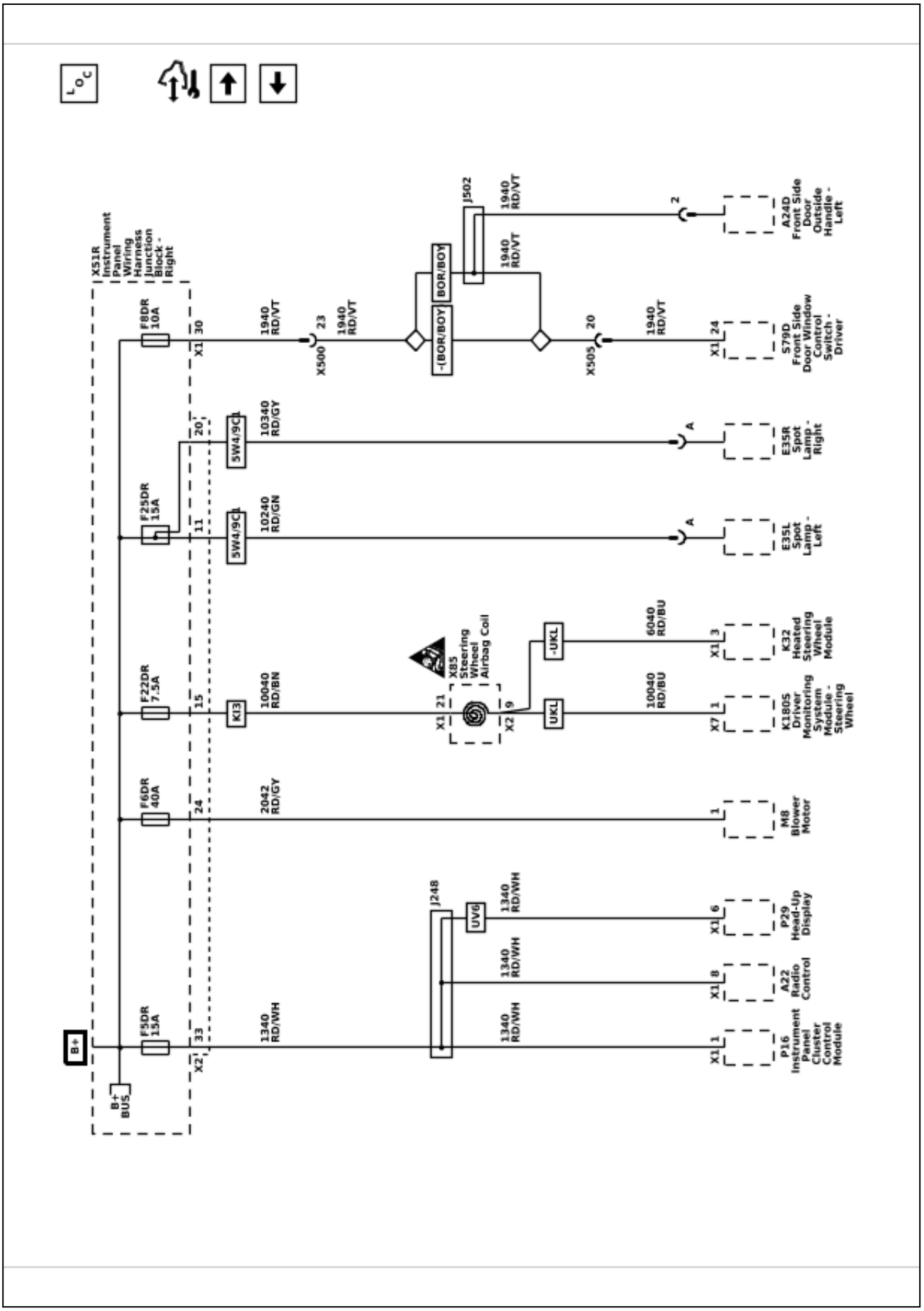

Power Distribution Schematics (F12DR, F14DR, F34DR, F48DR, F54DR, and F56DR Fuses)

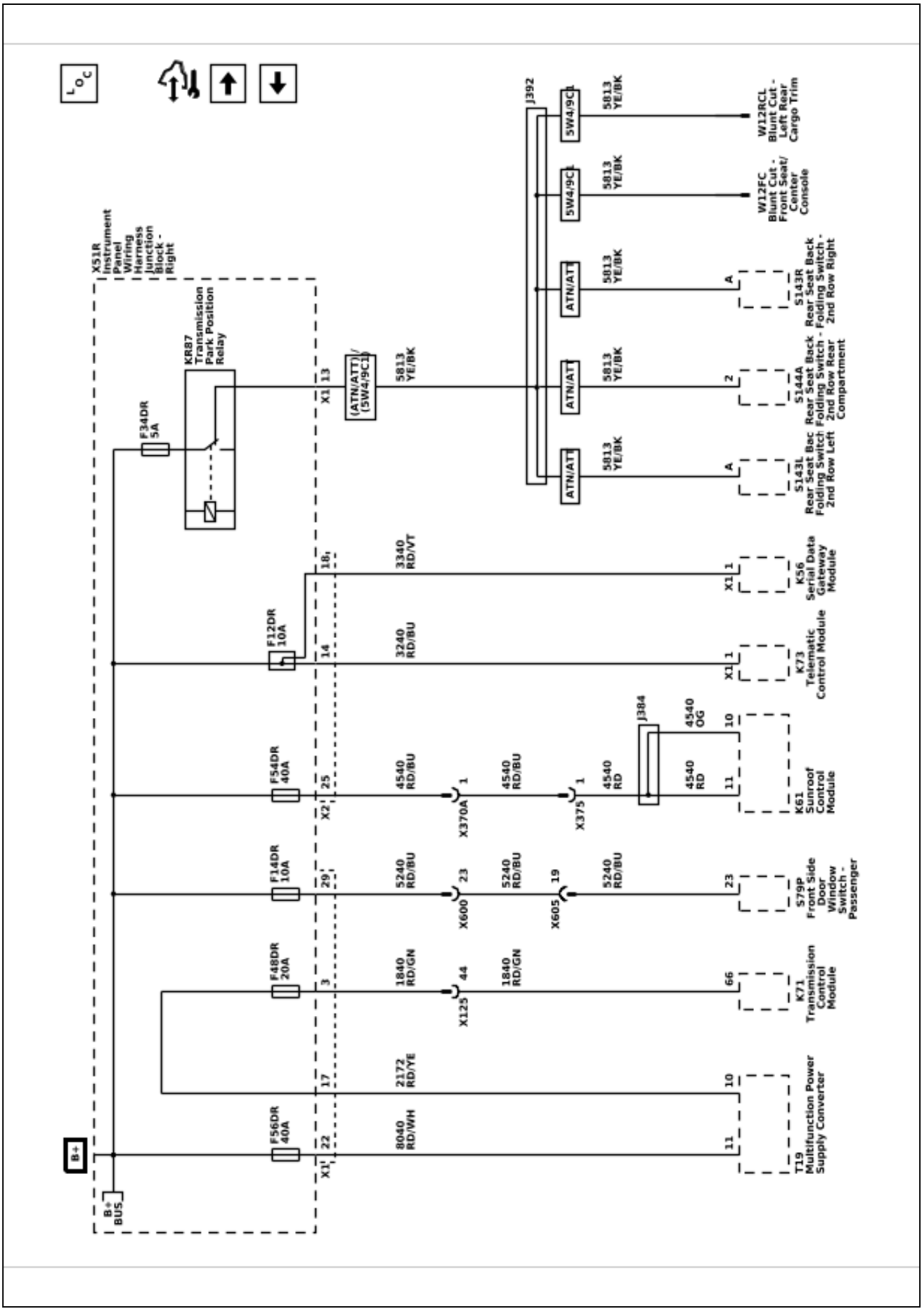

Power Distribution Schematics (F17DR, F42DR, F43DR, and F57DR Fuses)

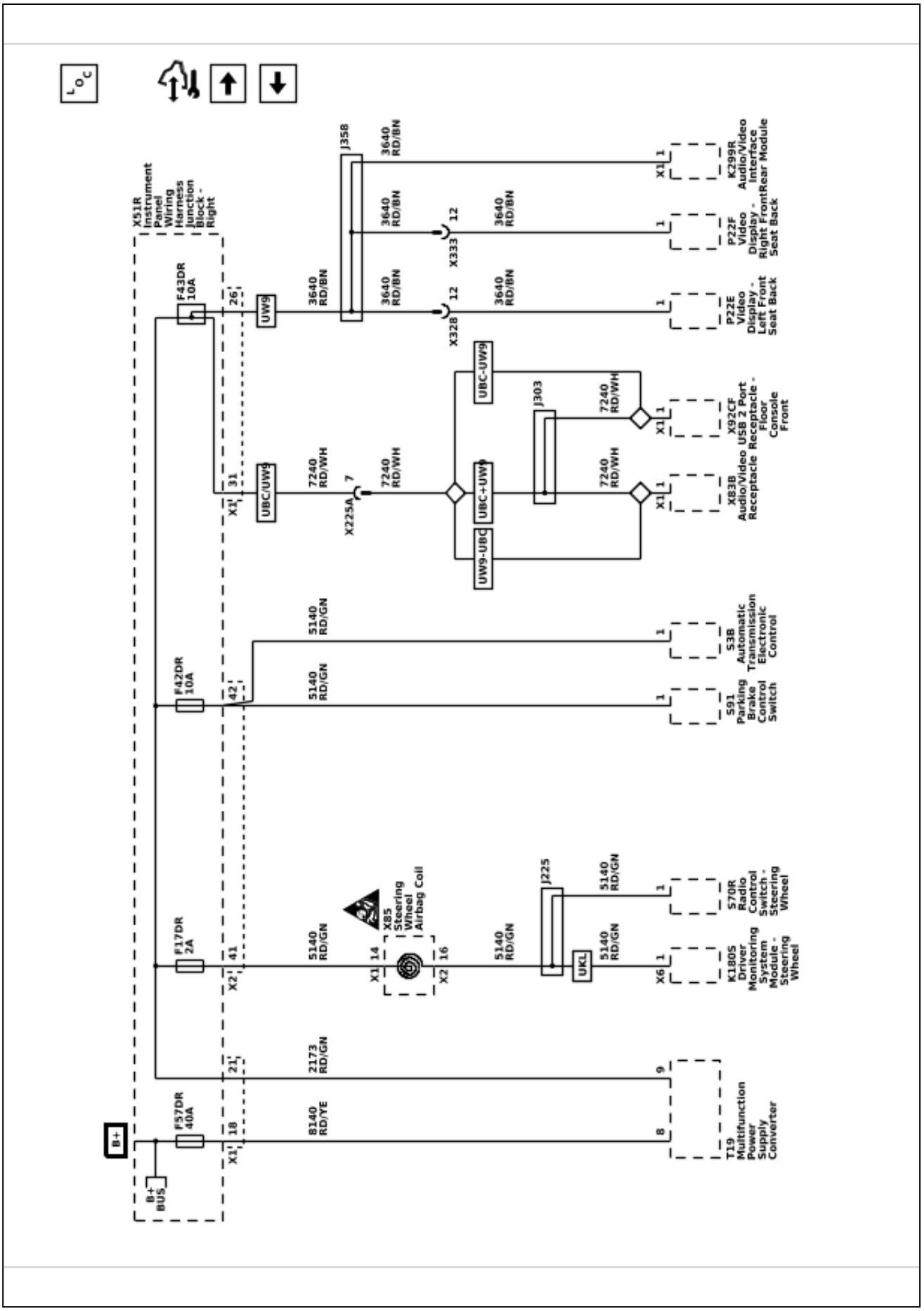

Power Distribution Schematics (F30DR and F32DR Fuses)

6613458

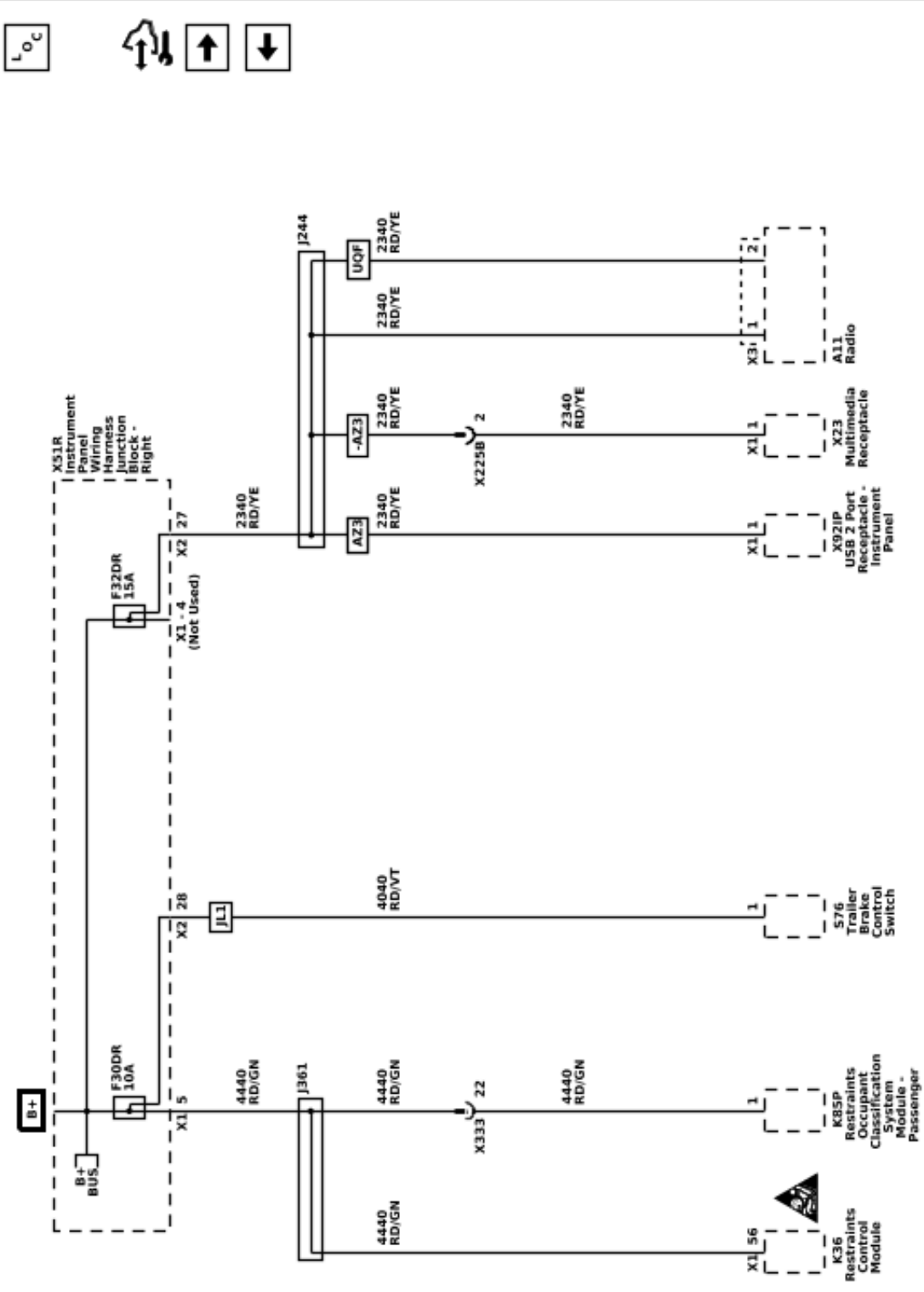

Power Distribution Schematics (X53A Body Wiring Harness Junction Block - Rear B+ Bus)

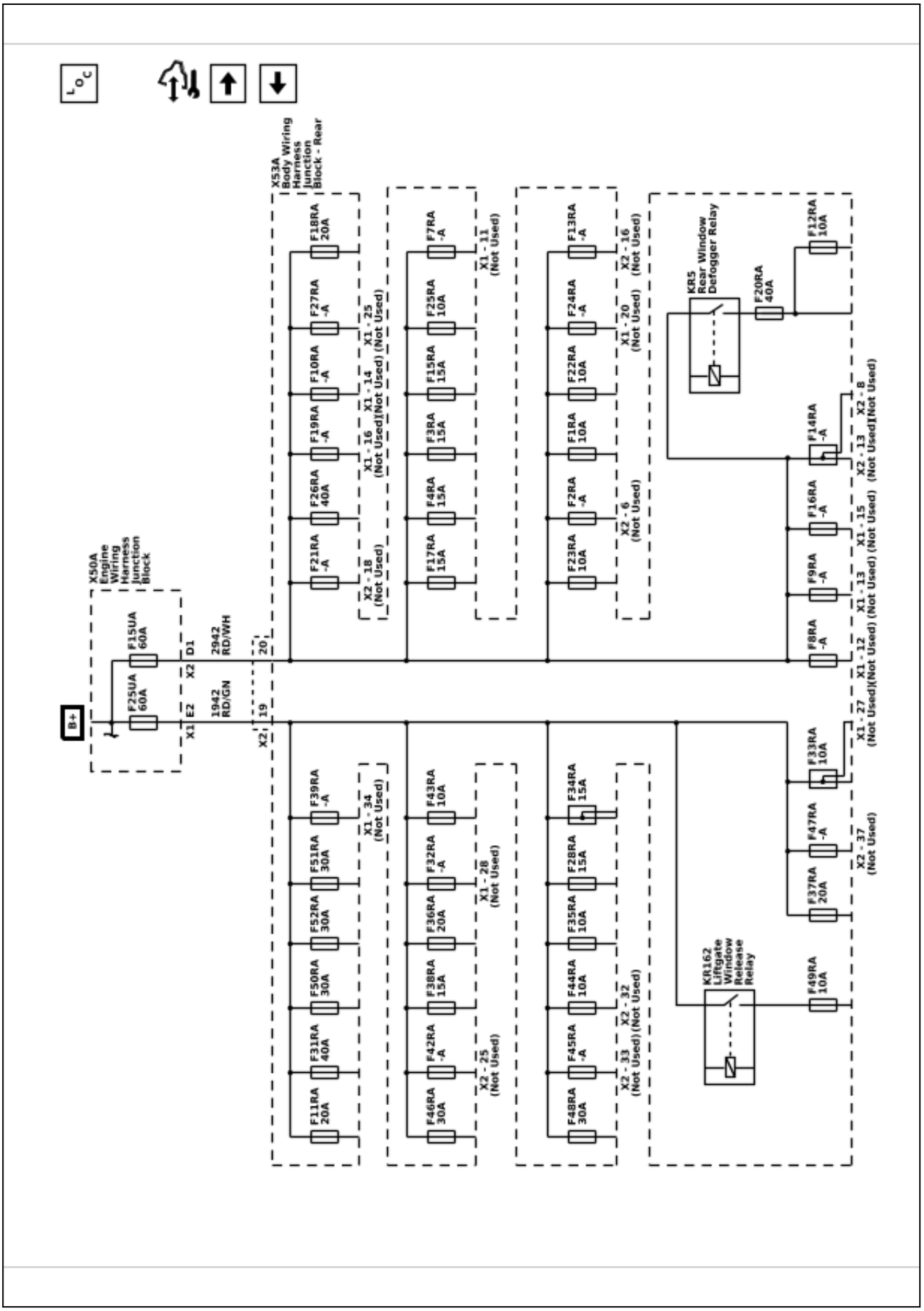

Power Distribution Schematics (F1RA, F3RA, F12RA, F15RA, F17RA,F18RA, F20RA, F22RA, and F23RA Fuses)

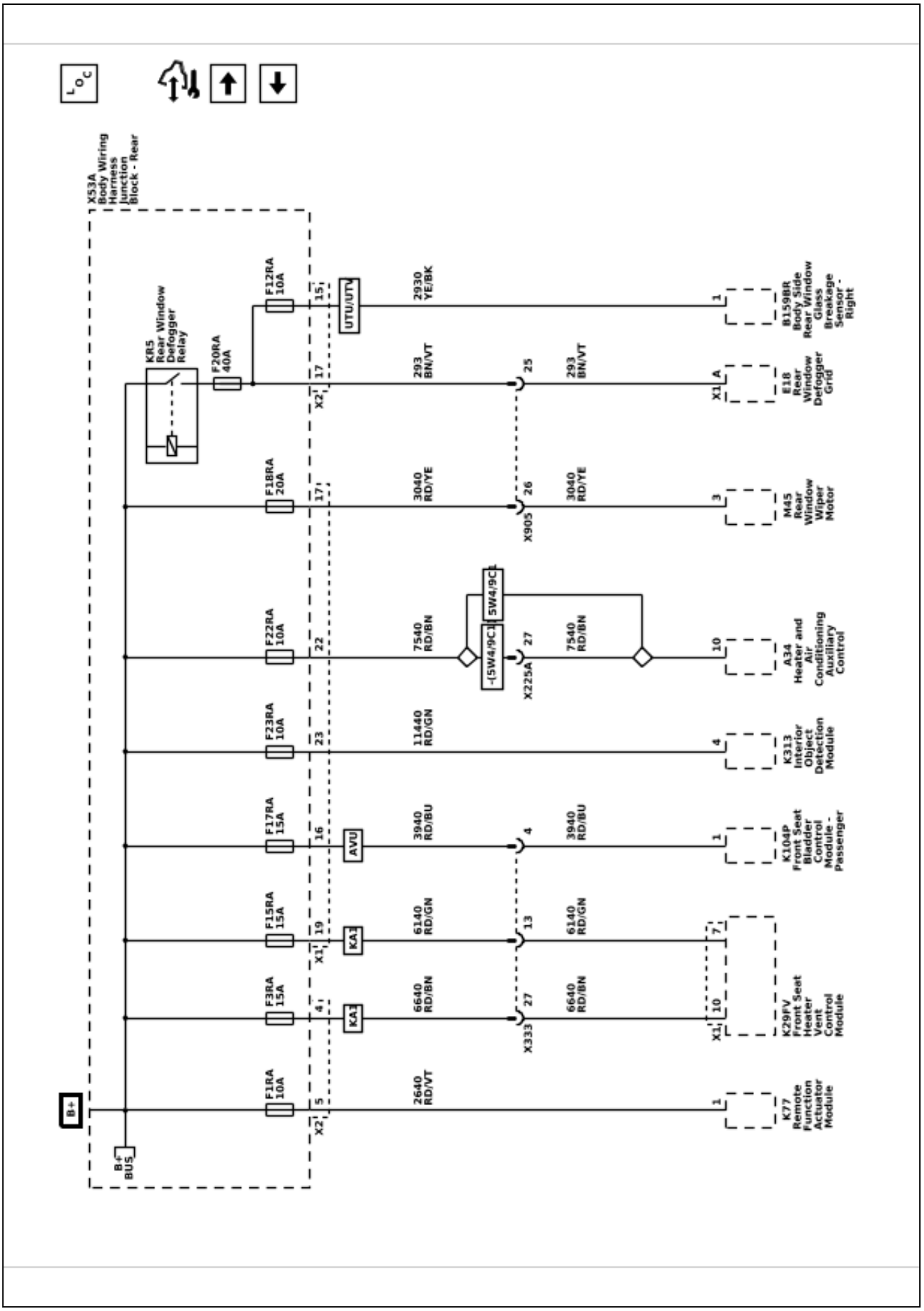

Power Distribution Schematics (F4RA, F25RA, and F26RA Fuses)

6613466

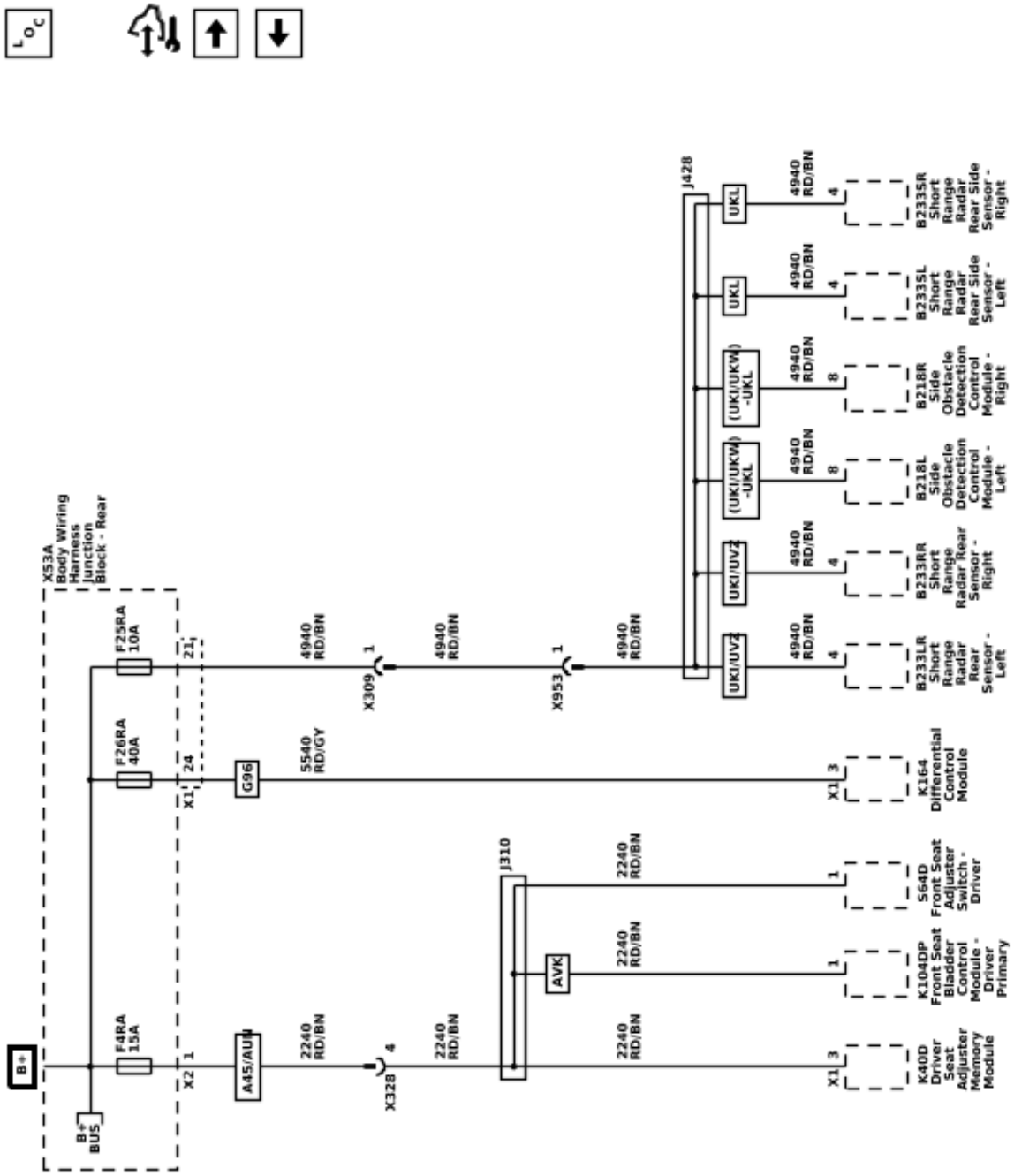

Power Distribution Schematics (F11RA, F31RA, F33RA, F38RA, F43RA, F46RA, F48RA, F49RA, and F51RA Fuses)

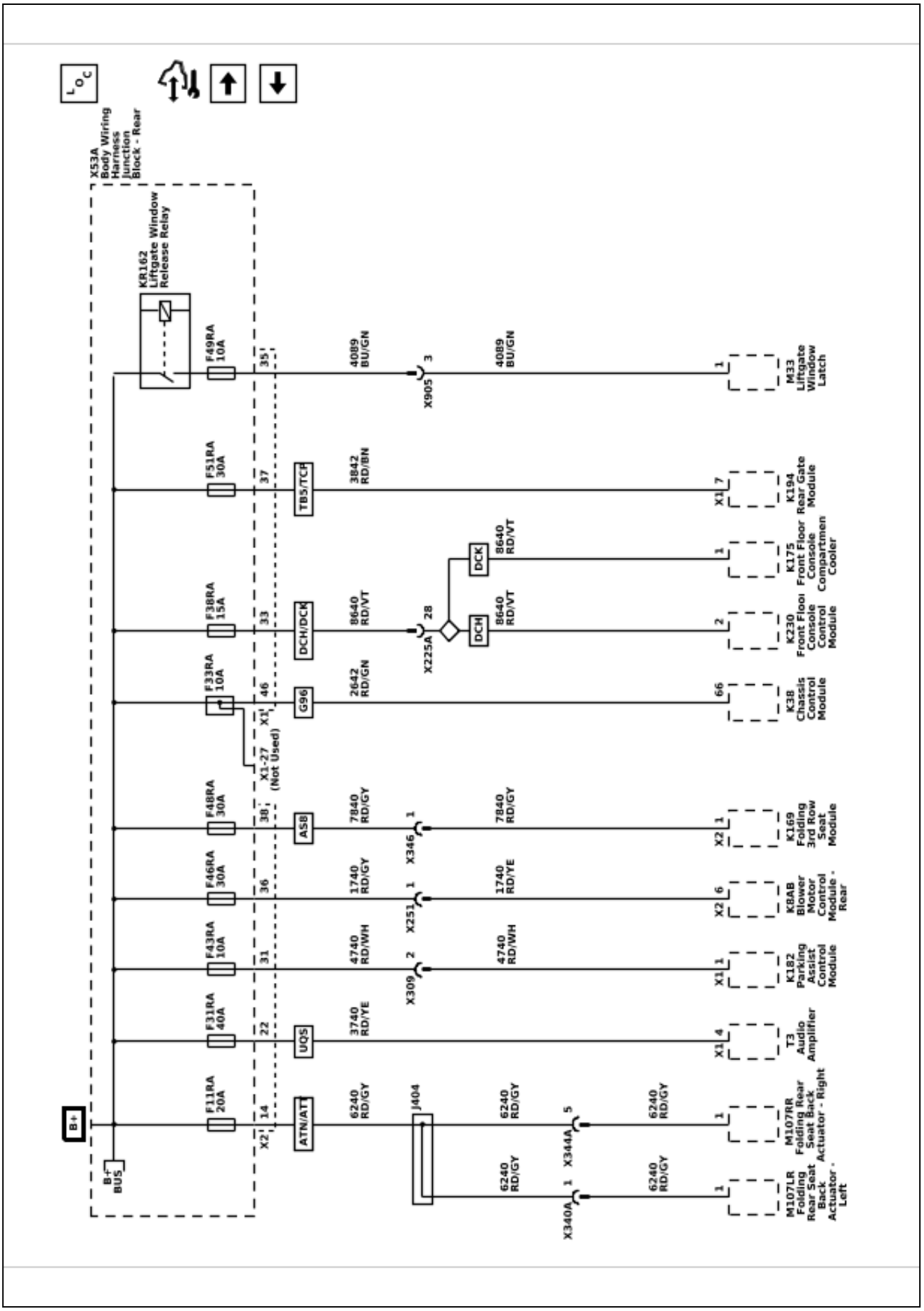

Power Distribution Schematics (F28RA, F34RA, F35RA, F50RA and F52RA Fuses)

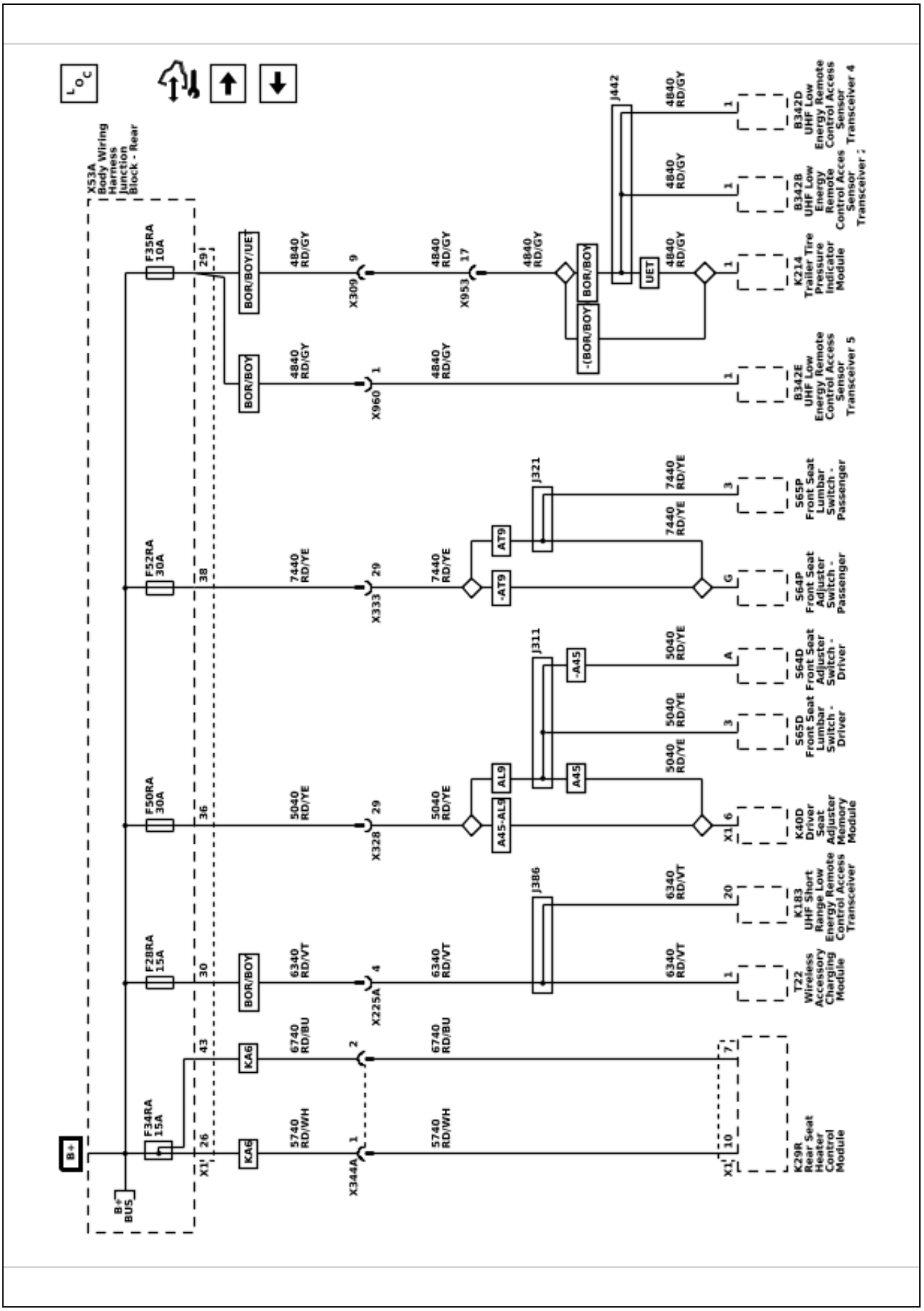

Power Distribution Schematics (F6UA Fuse and Lighting Control Module Fused Outputs)

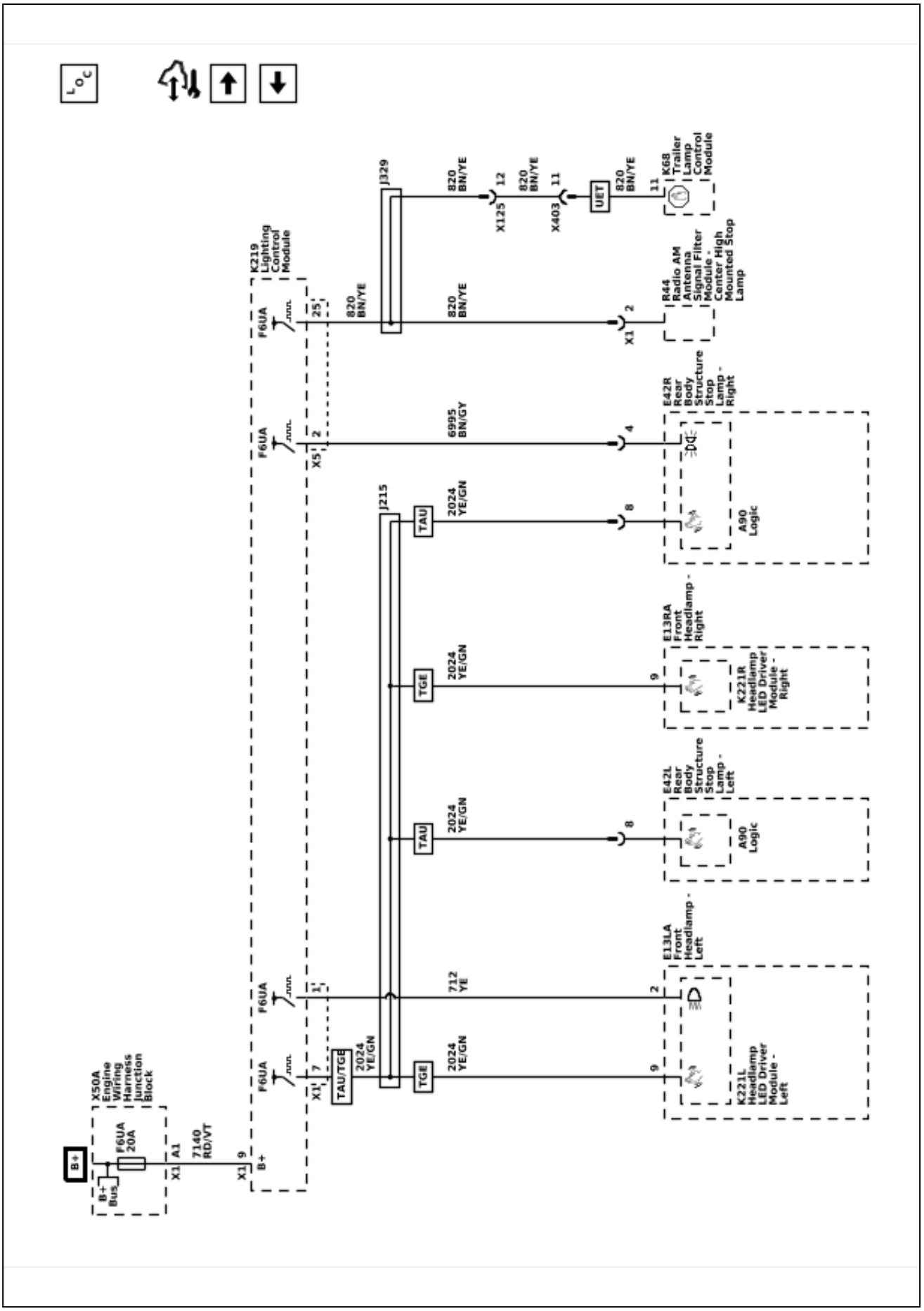

6678640

Power Distribution Schematics (F7UA Fuse and Lighting Control Module Fused Outputs)

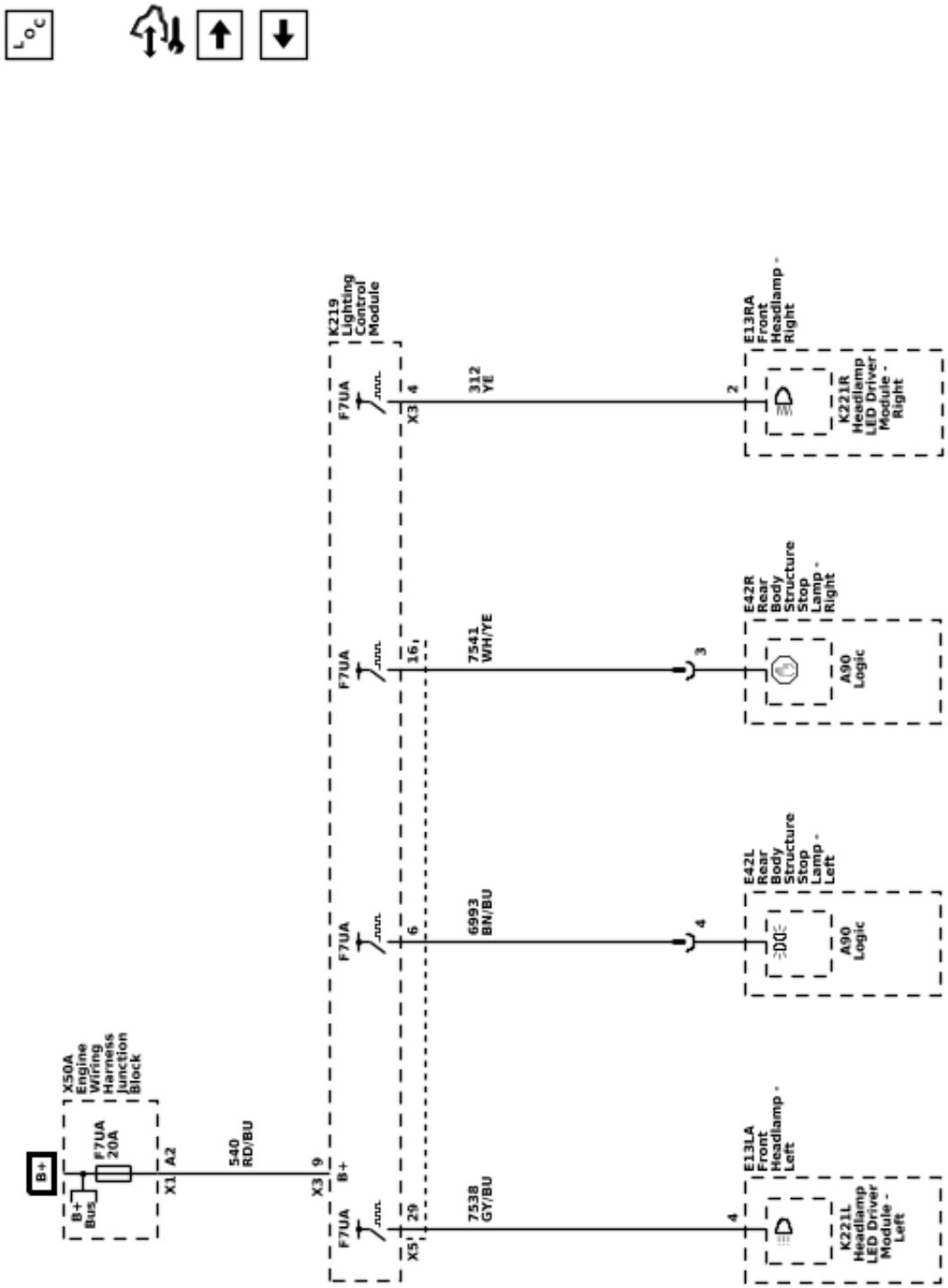

Power Distribution Schematics (F9UA Fuse and Lighting Control Module Fused Outputs)

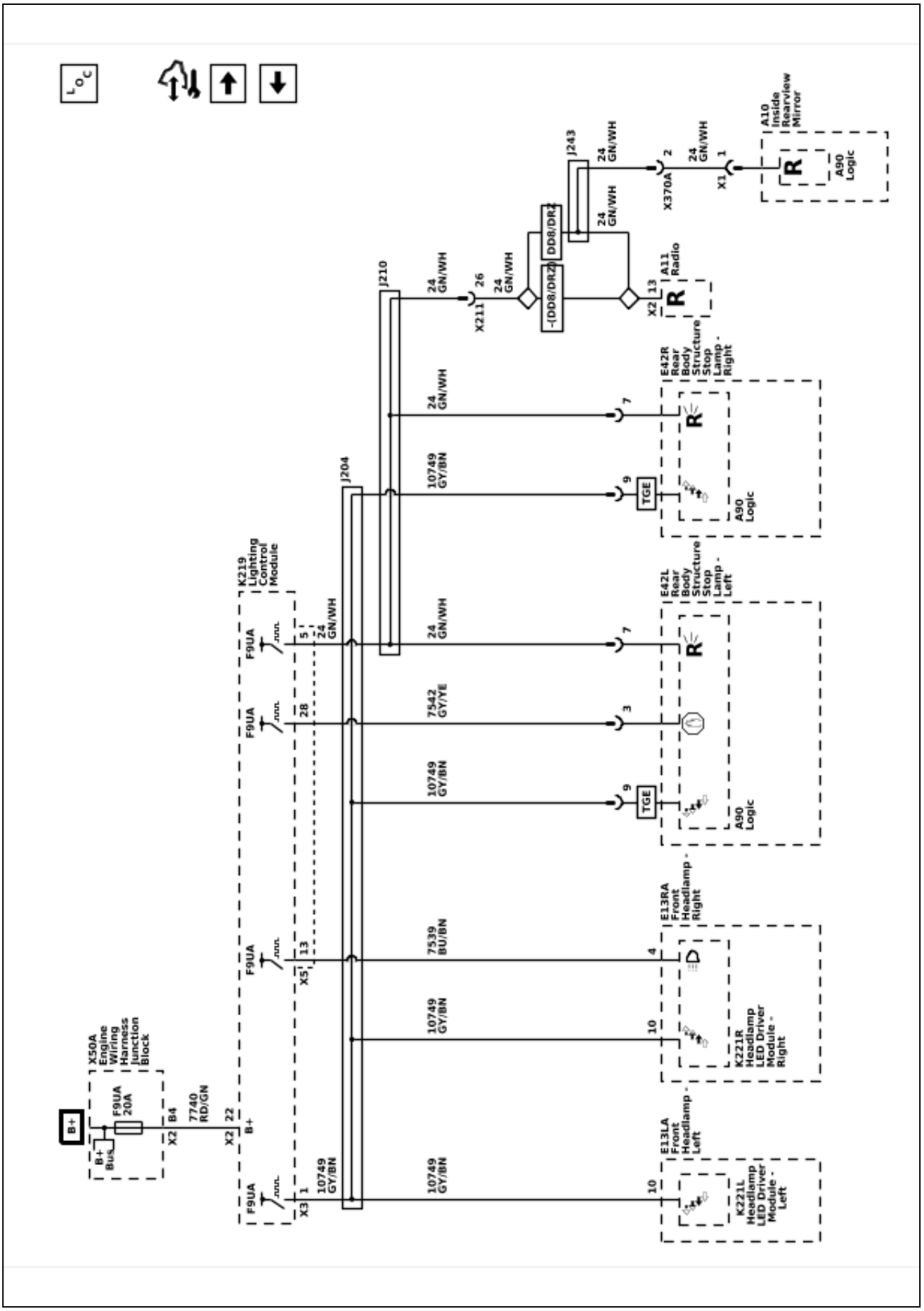

Power Distribution Schematics (F30UA Fuse and Lighting Control Module Fused Outputs)

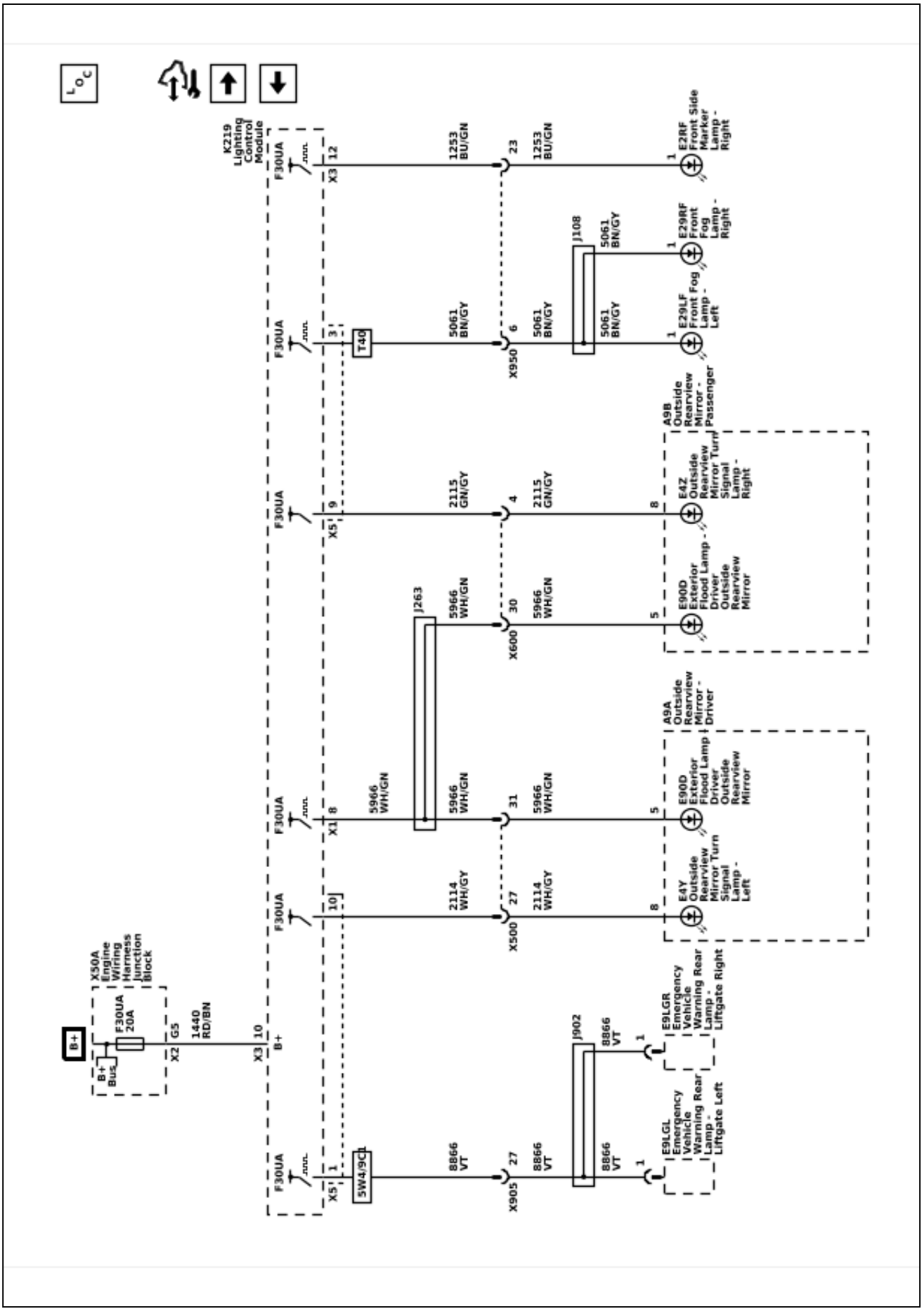

6678643

Power Distribution Schematics (F31UA Fuse and Lighting Control Module Fused Outputs)

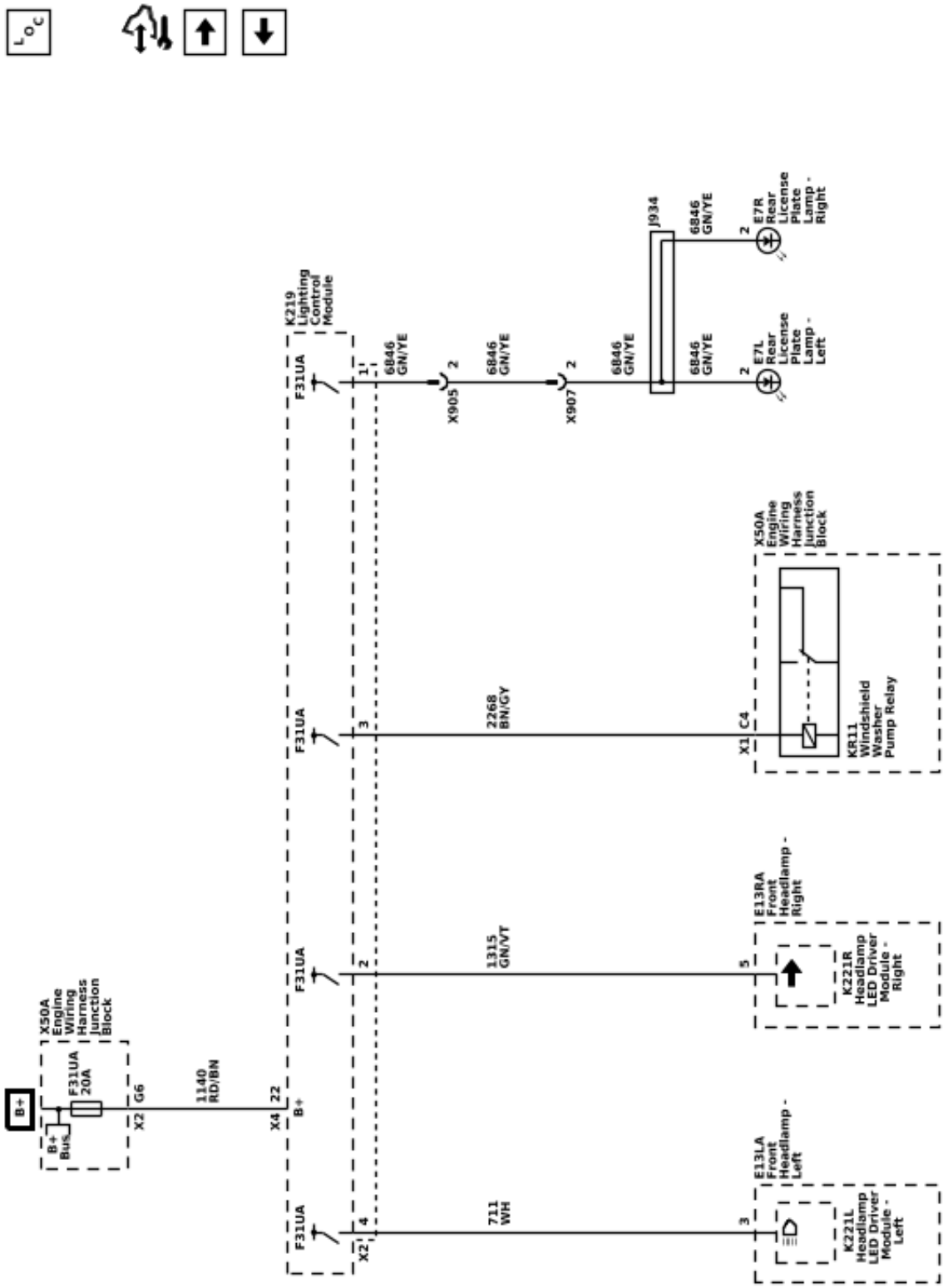

6678442

Power Distribution Schematics (F36RA Fuse and Lighting Control Module Fused Outputs)

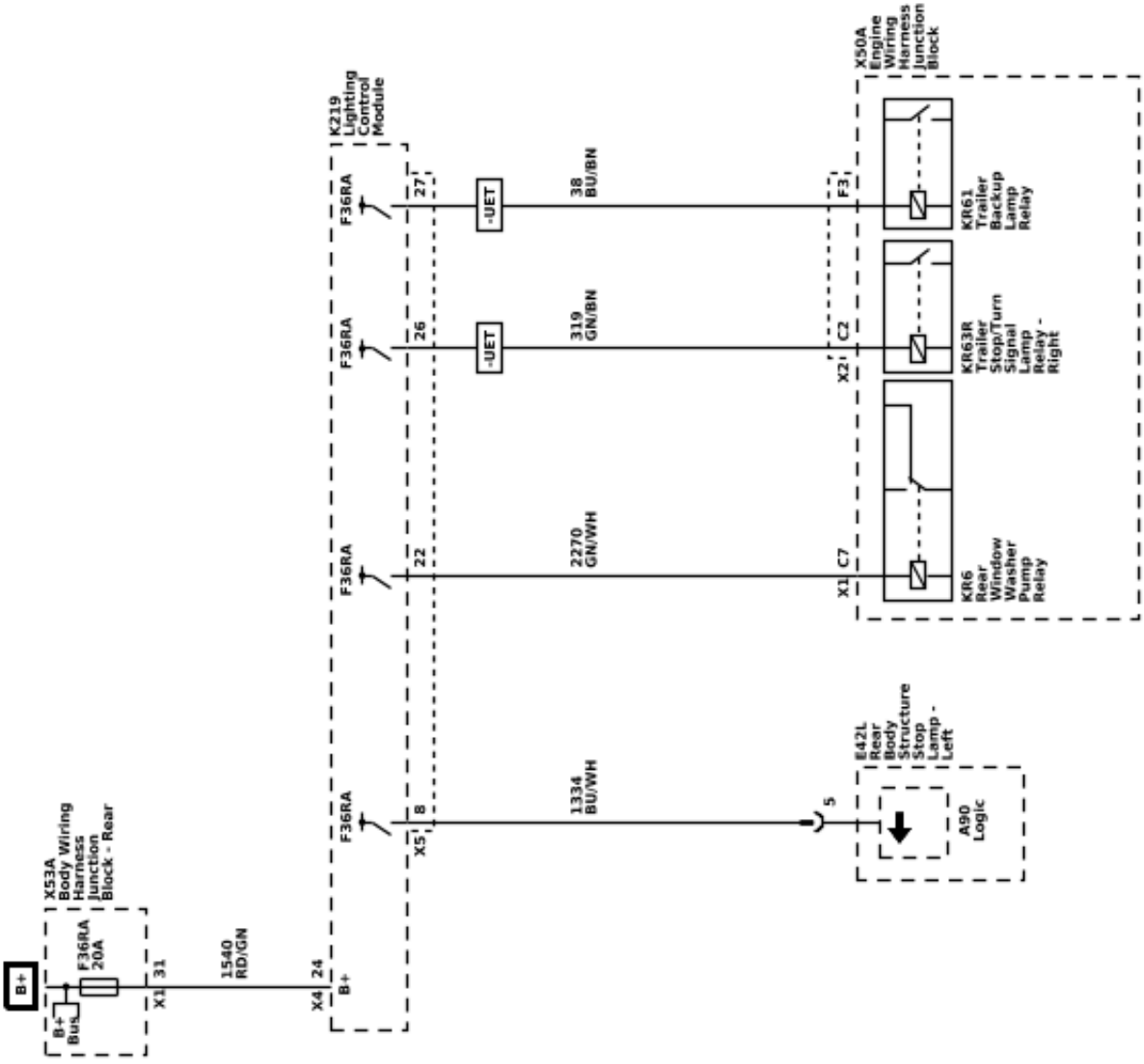

Power Distribution Schematics (F37RA Fuse and Lighting Control Module Fused Outputs)

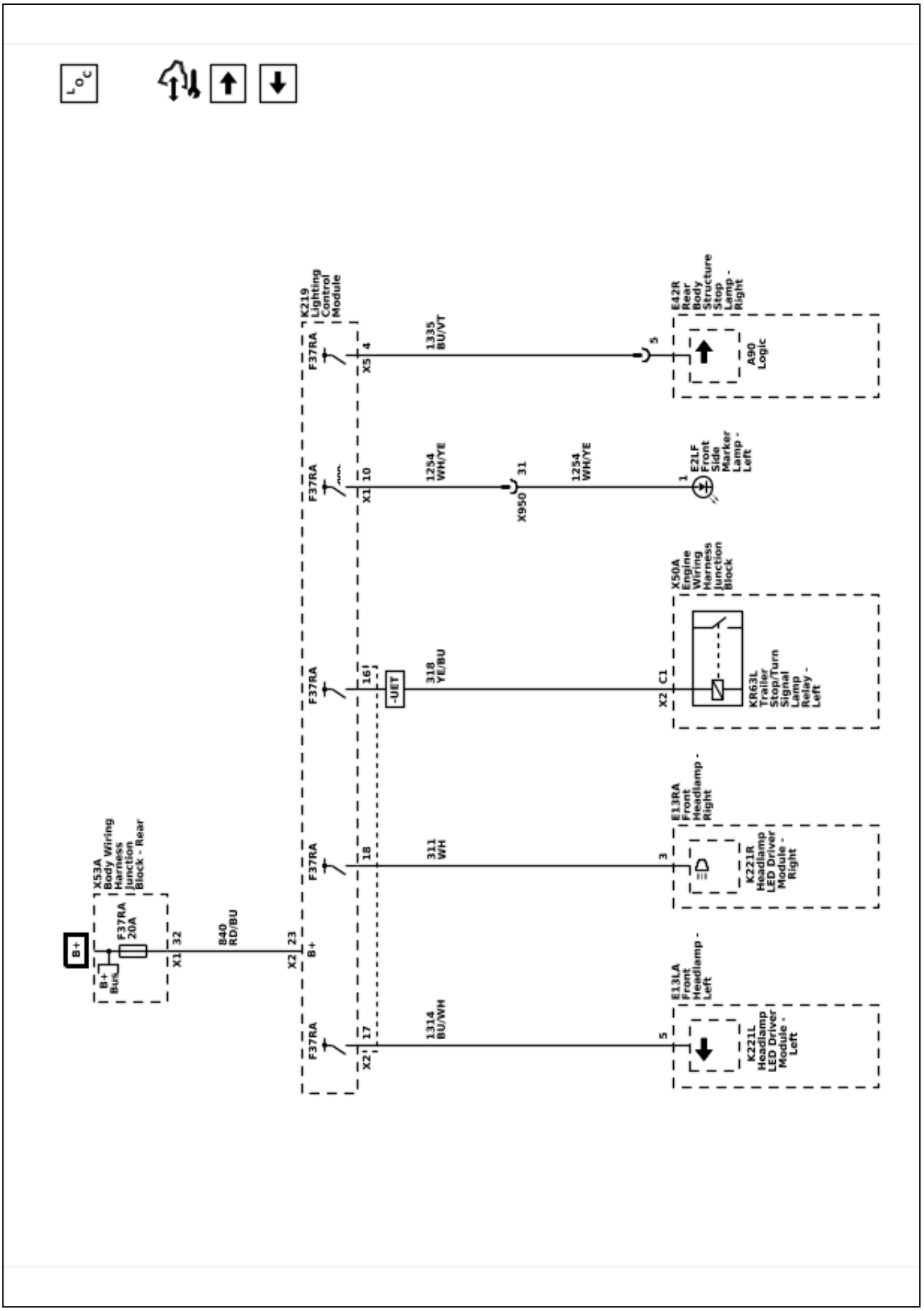

6678252

Power Distribution Schematics (F31UA and F36RA Fuses Lighting Control Module Redundant Outputs)

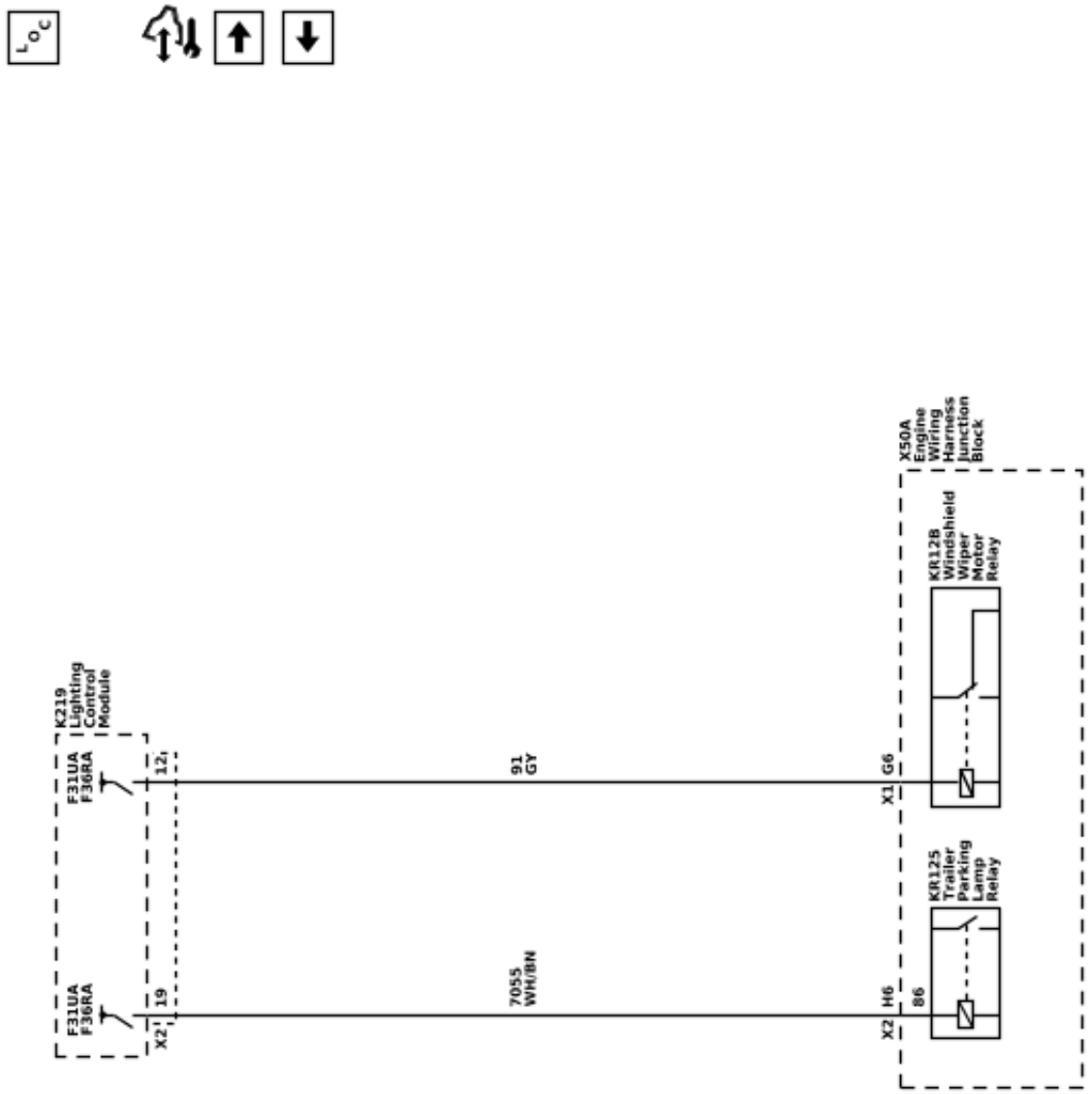

Power Distribution Schematics (F4DR Fuse and Body Control Module Fused Outputs 1 of 2)

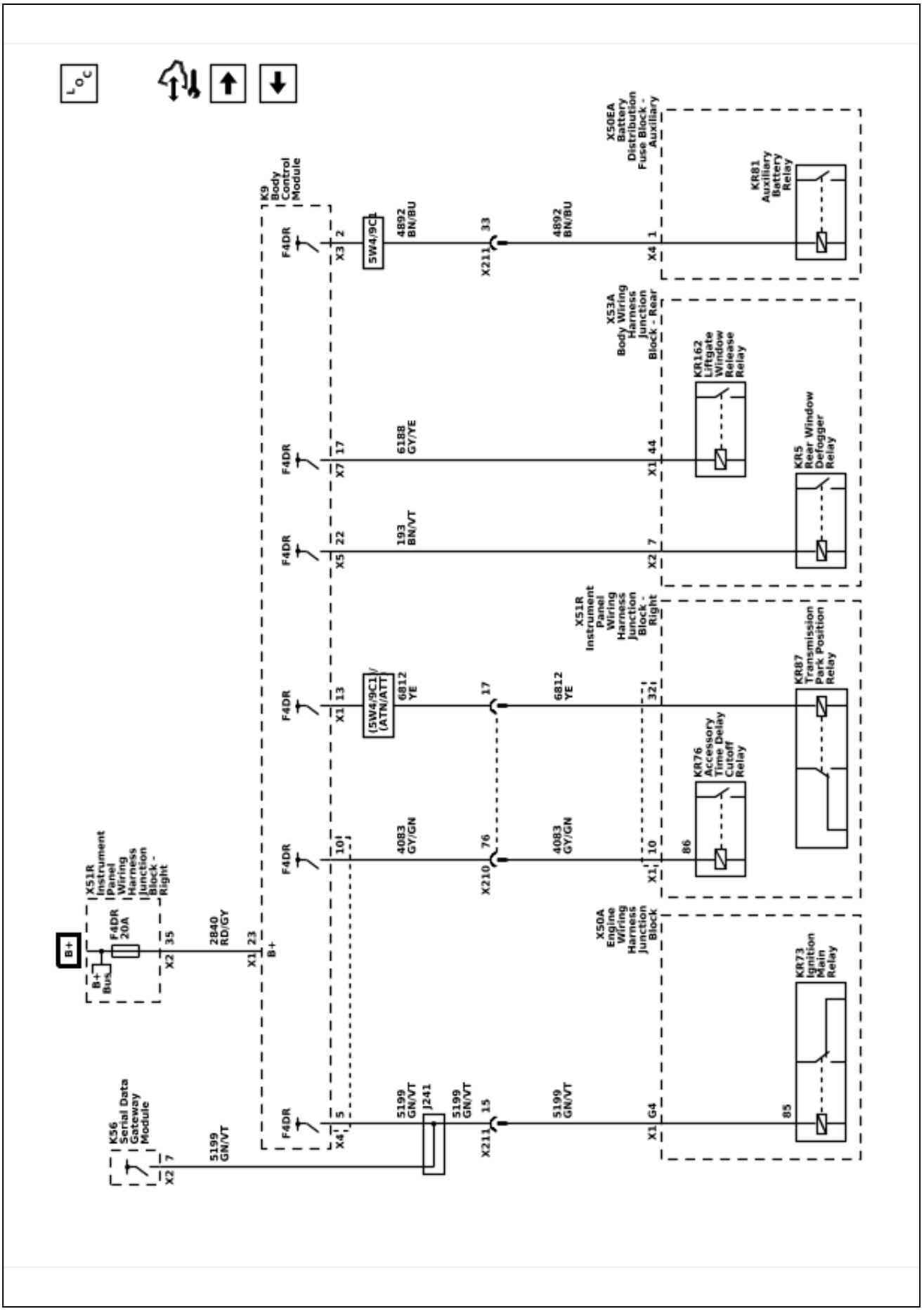

6678445

Power Distribution Schematics (F4DR Fuse and Body Control Module Fused Outputs 2 of 2)

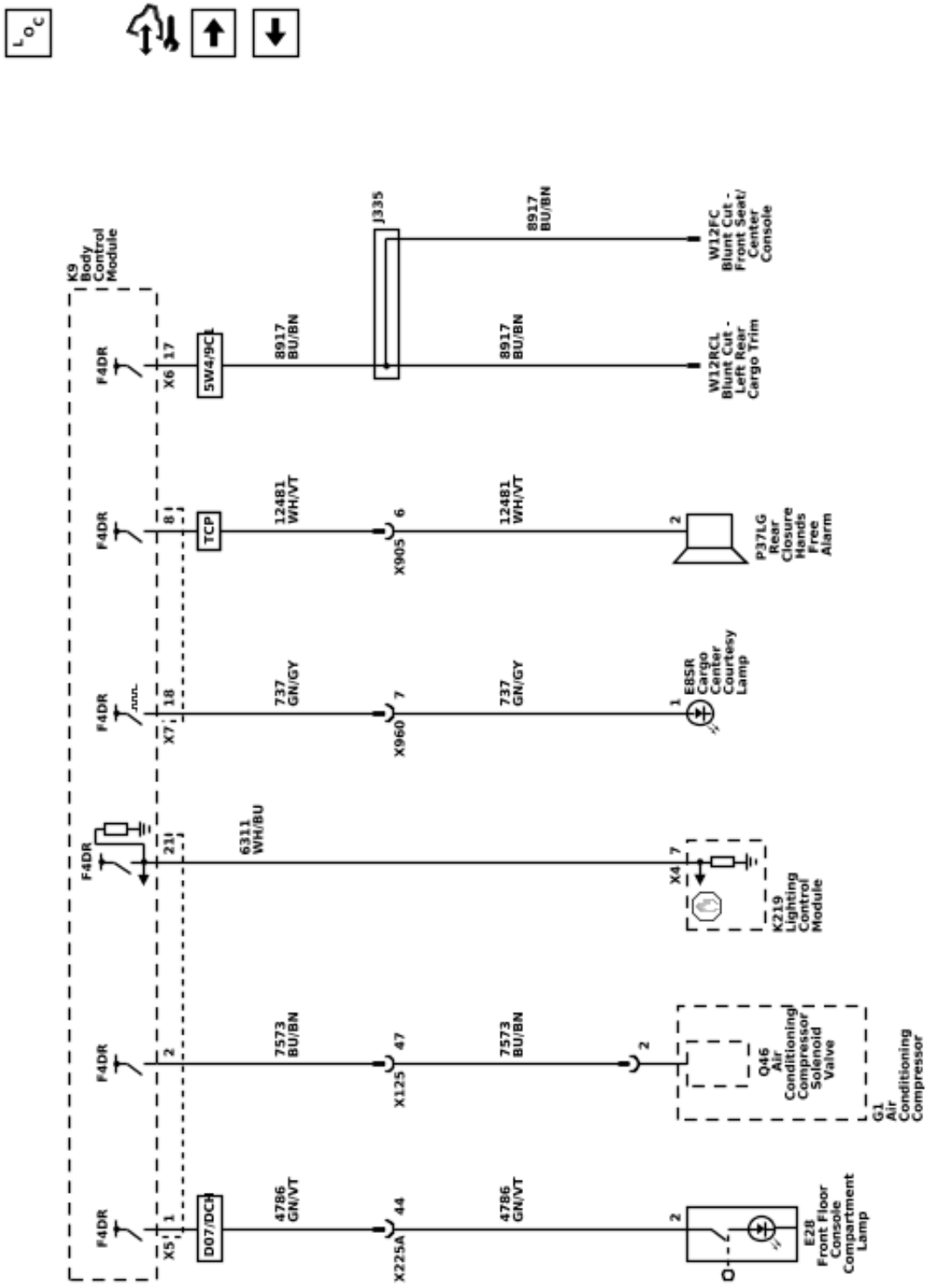

Power Distribution Schematics (F31DR Fuse and Body Control Module Fused Outputs)

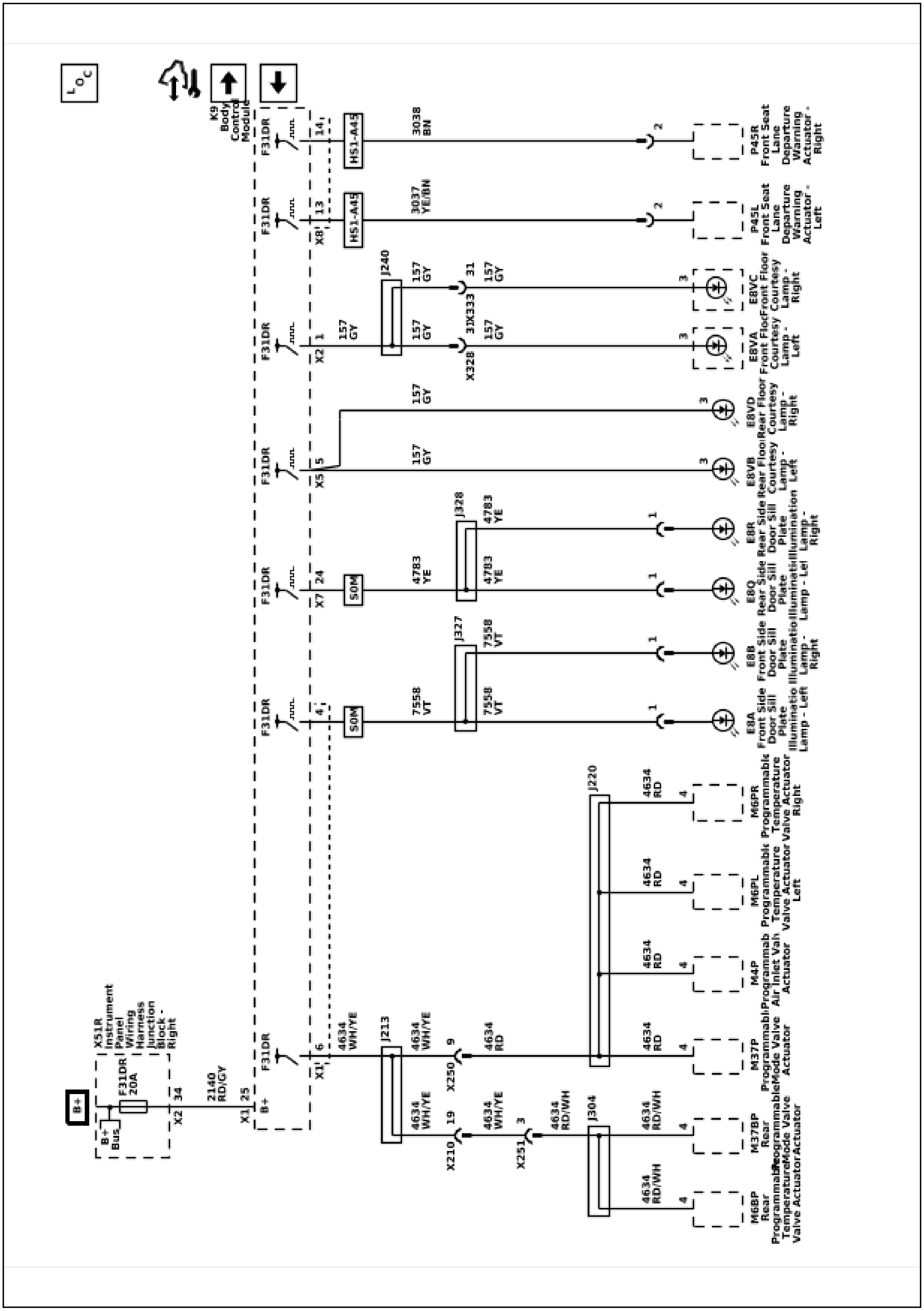

6678446

6678255

Power Distribution Schematics (F33DR Fuse and Body Control Module Fused Outputs)

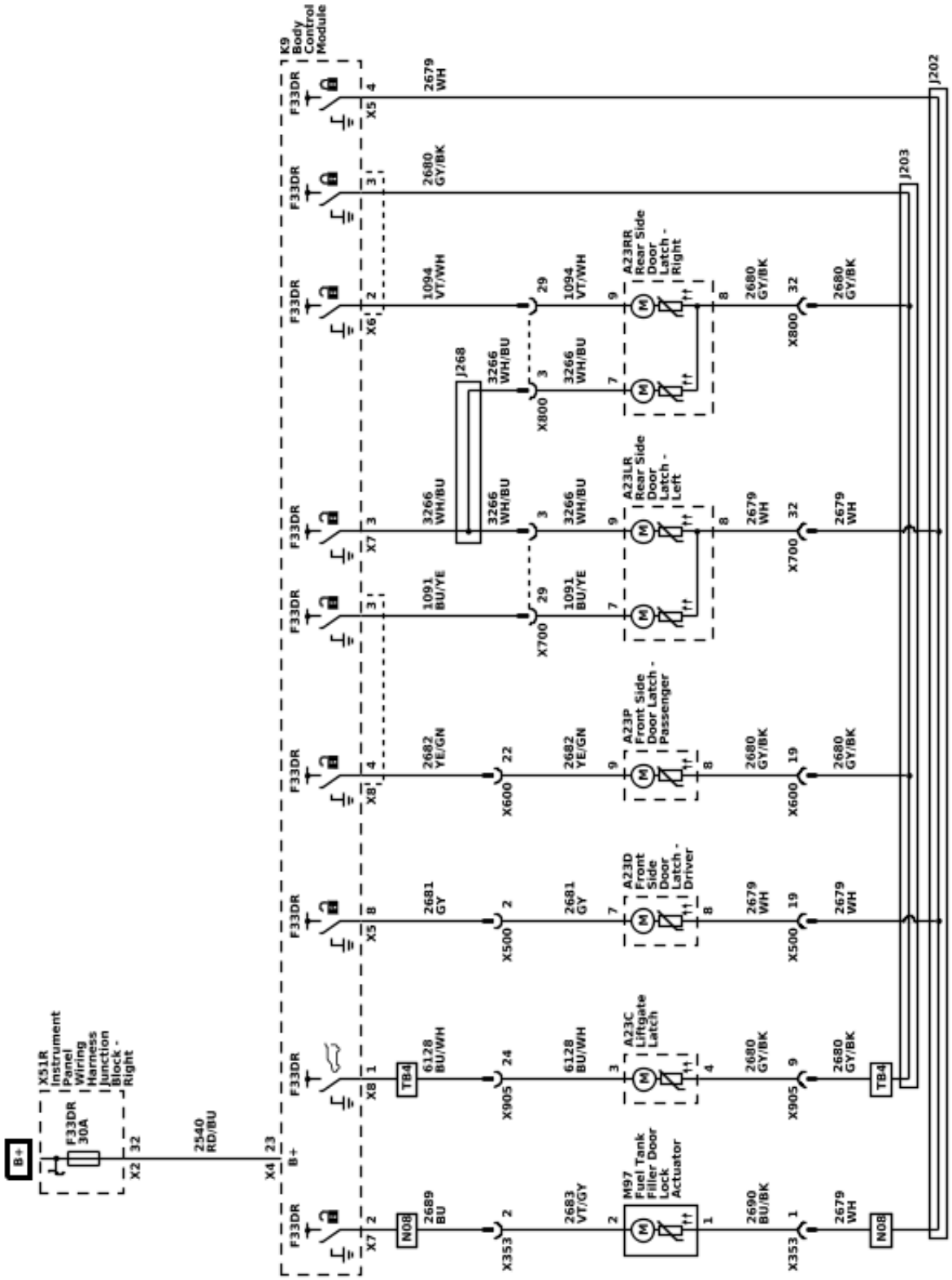

Power Distribution Schematics (F49DR Fuse and Body Control Module Fused Outputs 1 of 2)

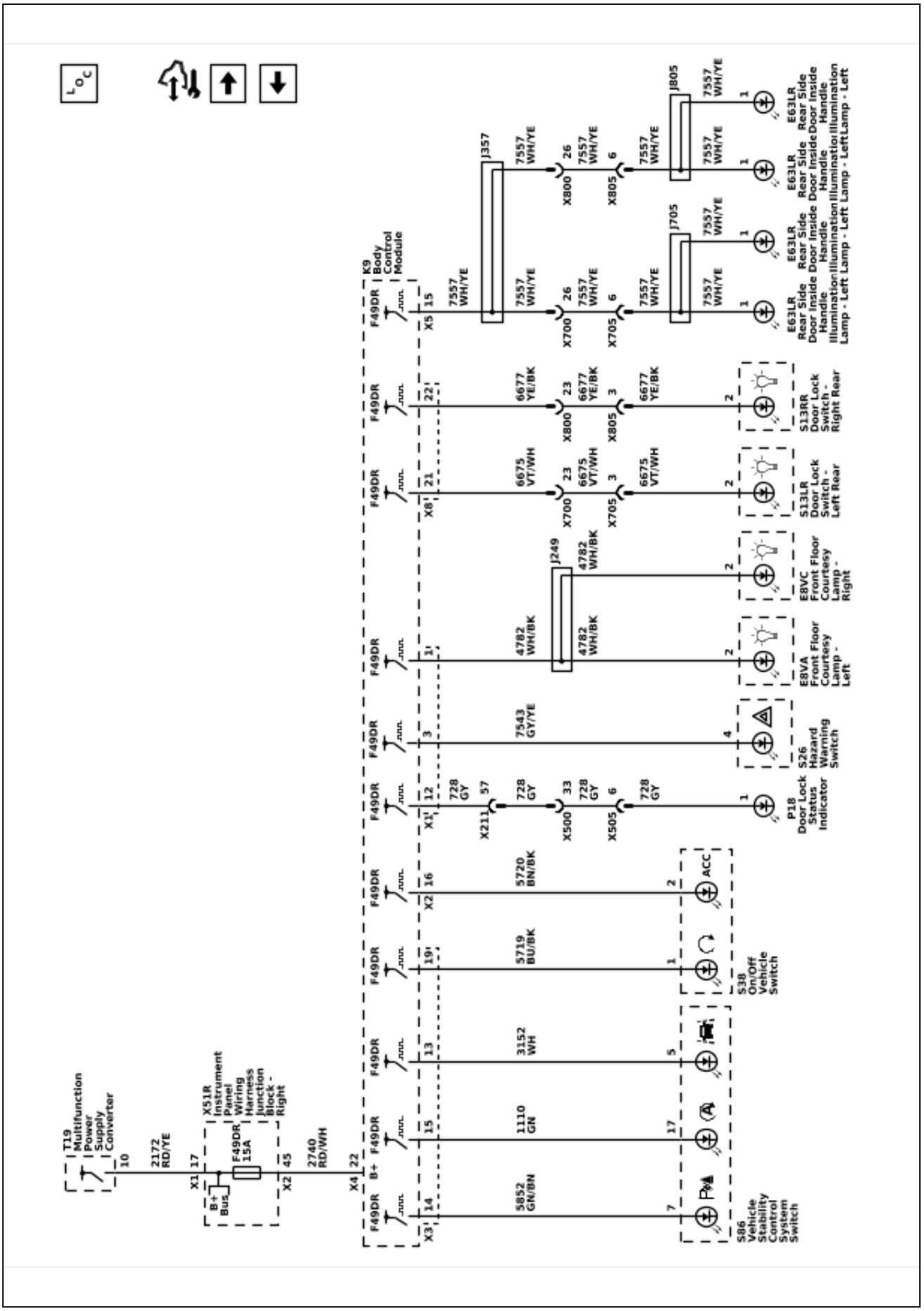

6678254

Power Distribution Schematics (F49DR Fuse and Body Control Module Fused Outputs 2 of 2)

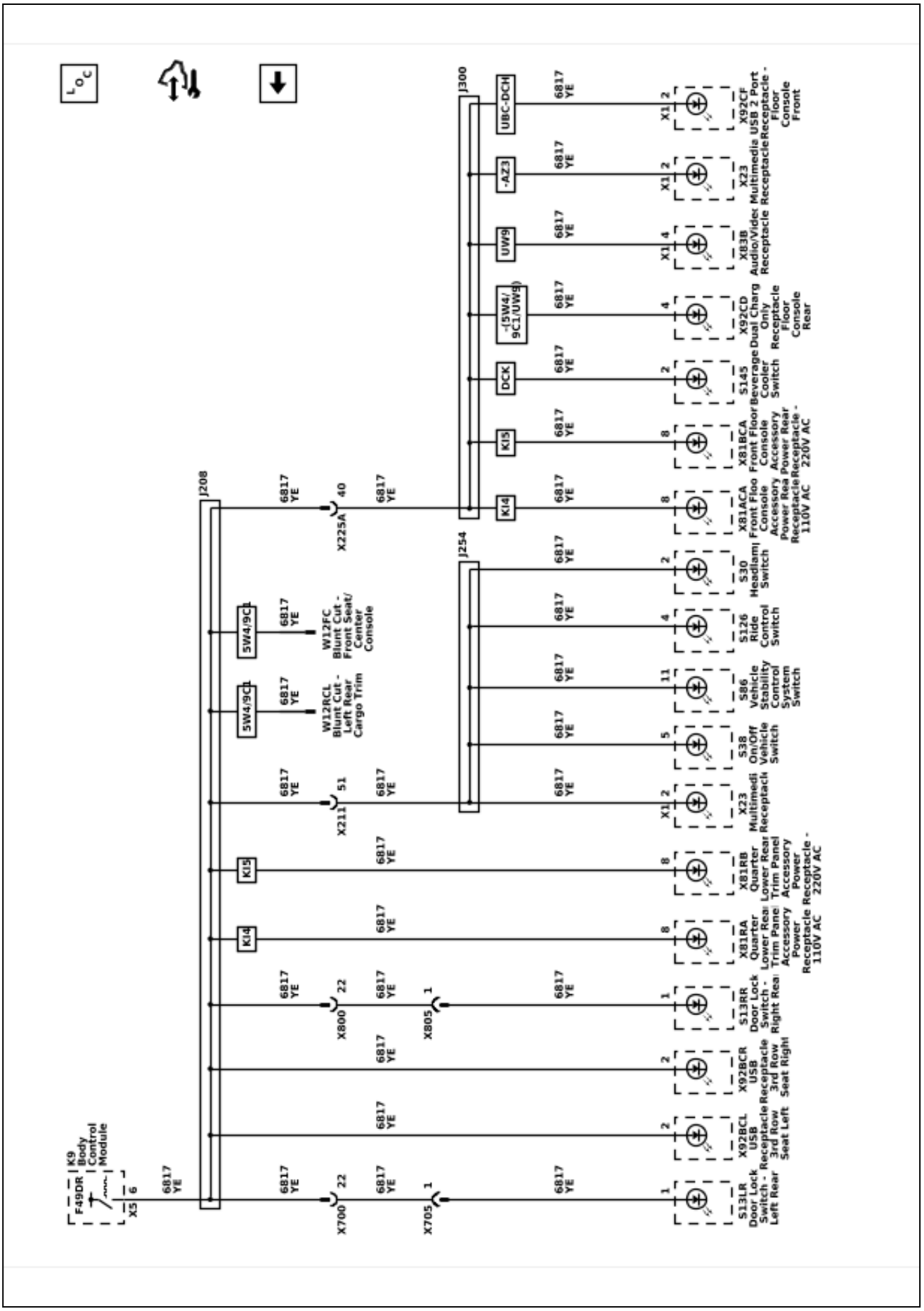

Power Moding Schematics (On/Off Vehicle Switch)

6613469

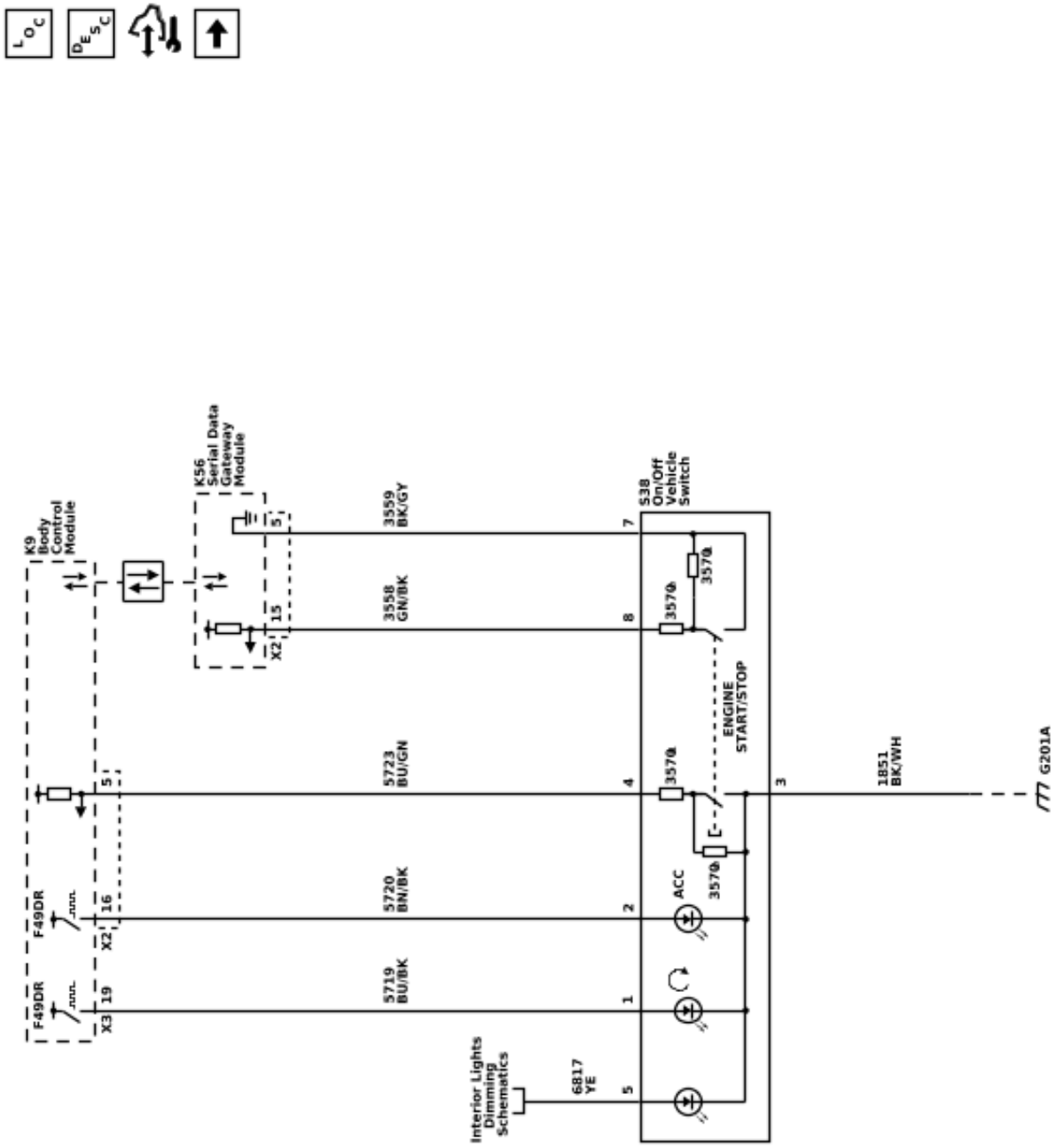

6613470

Power Moding Schematics (Ignition Main and Accessory Time Delay Cutoff Relays)

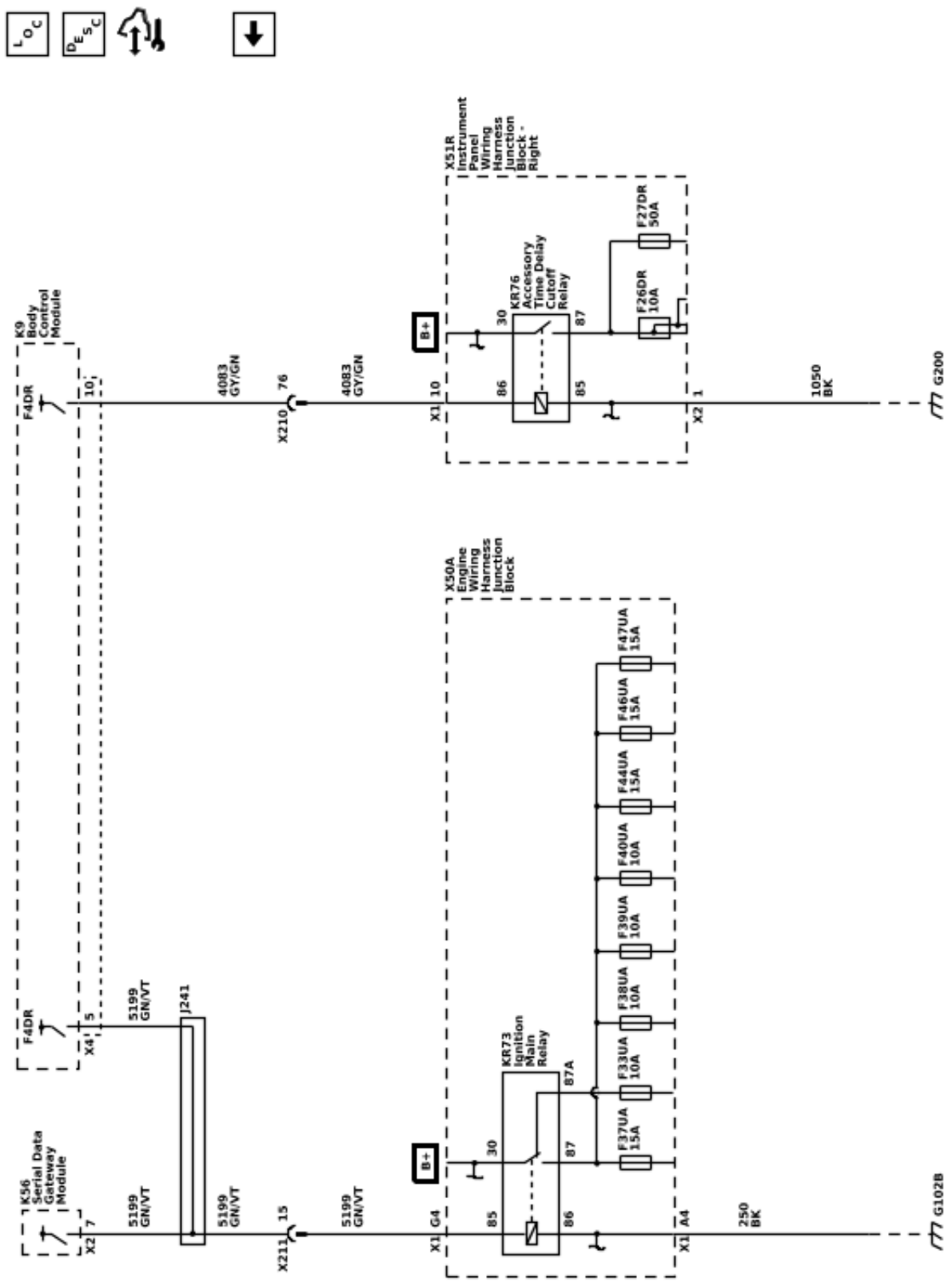

Upfitter Provision Schematics (X50EA Battery Distribution Fuse Block - Auxiliary (5W4 / 9C1))

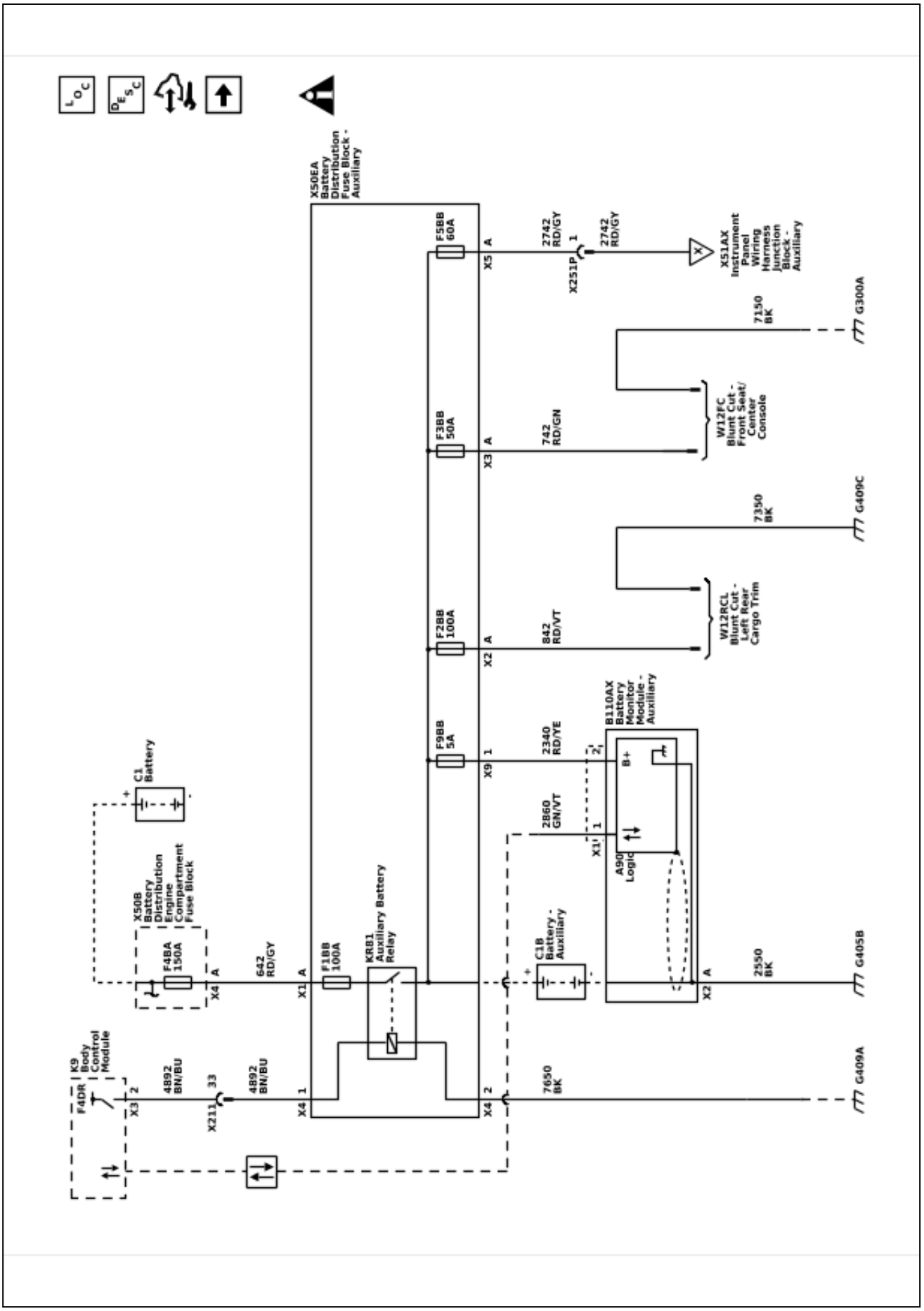

6613497

Upfitter Provision Schematics (X51AX Instrument Panel Wiring Harness Junction Block - Auxiliary (5W4 / 9C1))

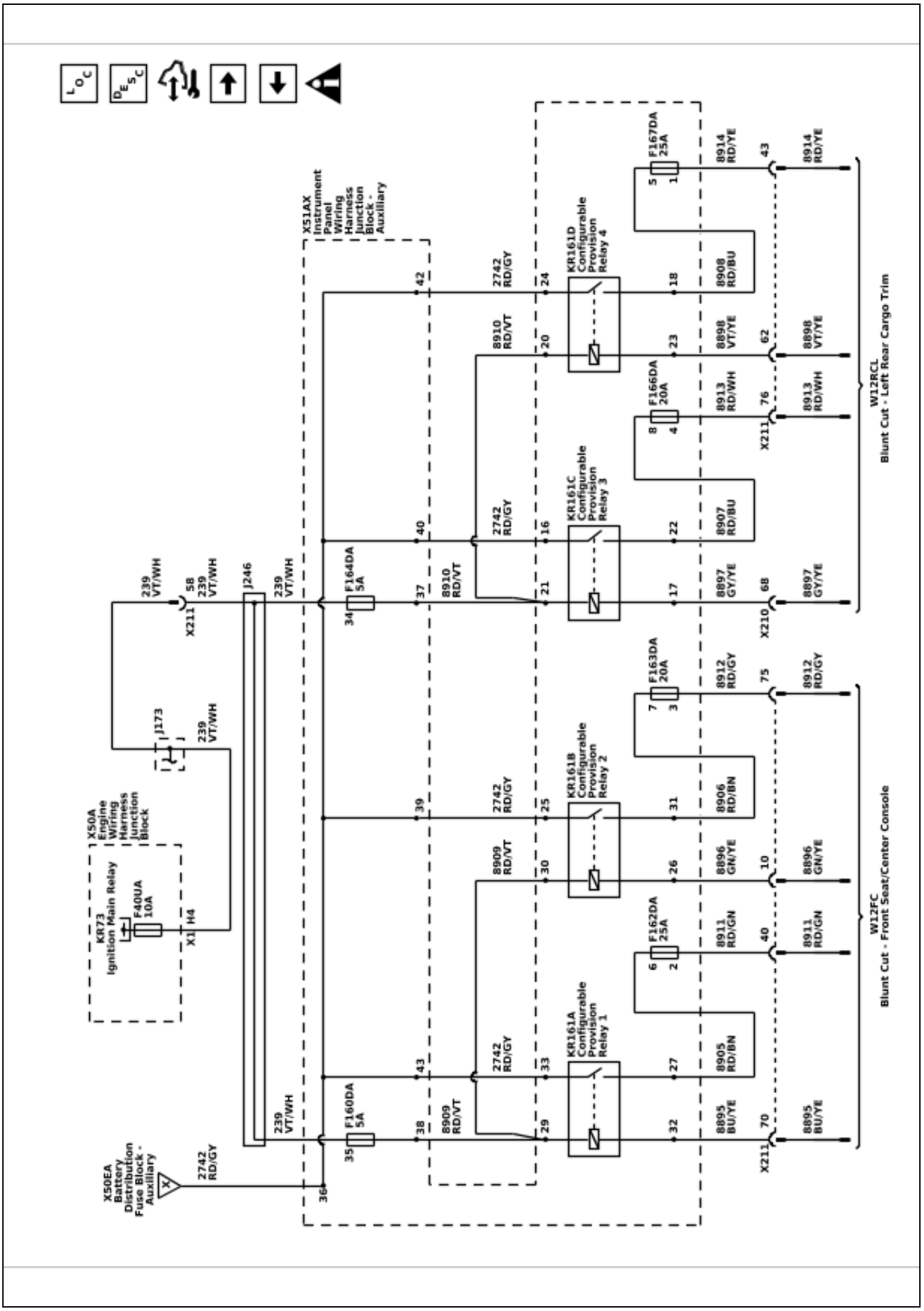

6613499

Upfitter Provision Schematics (Vehicle Systems Signals 1 of 2 (5W4 / 9C1))

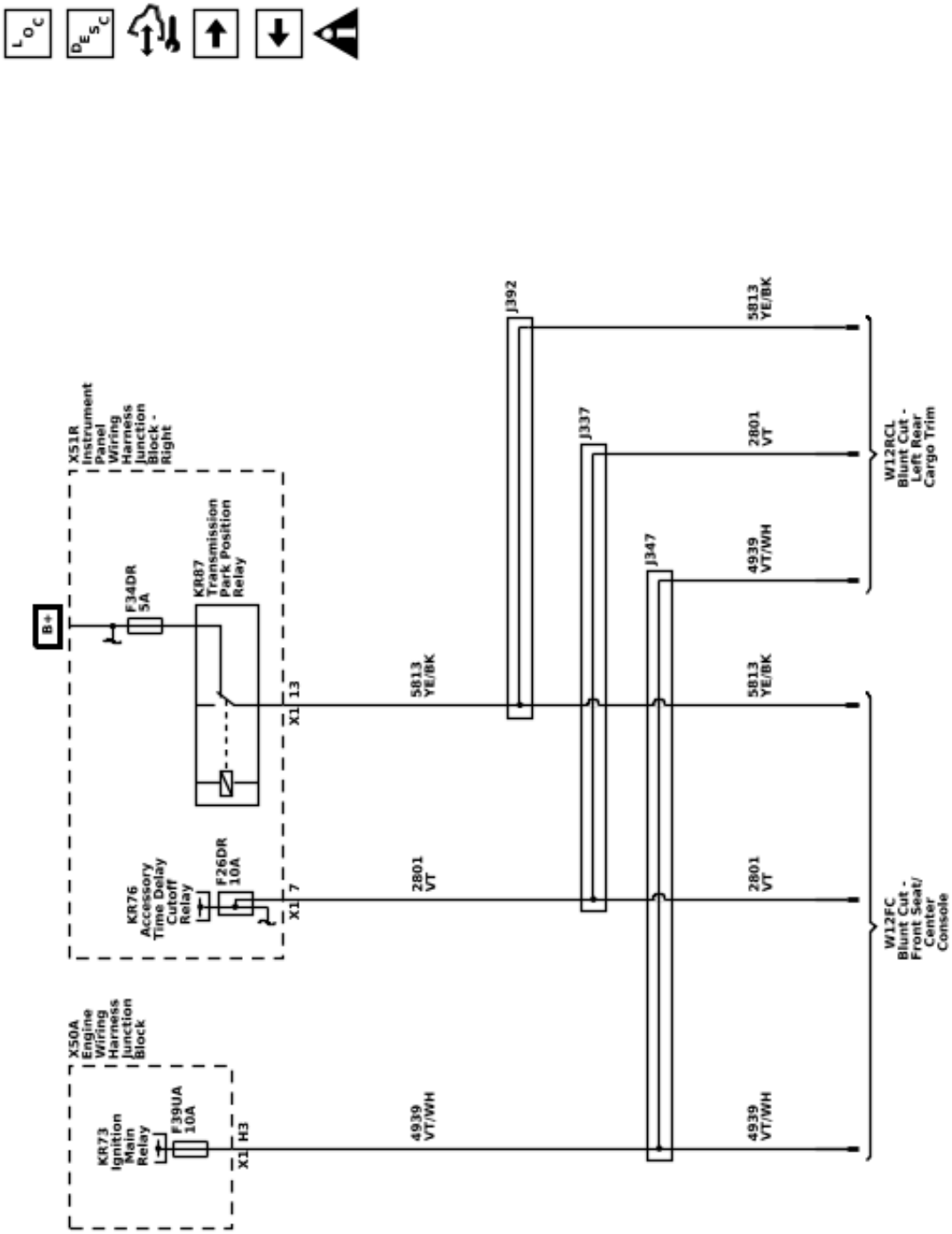

6613500

Upfitter Provision Schematics (Vehicle Systems Signals 2 of 2 (5W4 / 9C1))

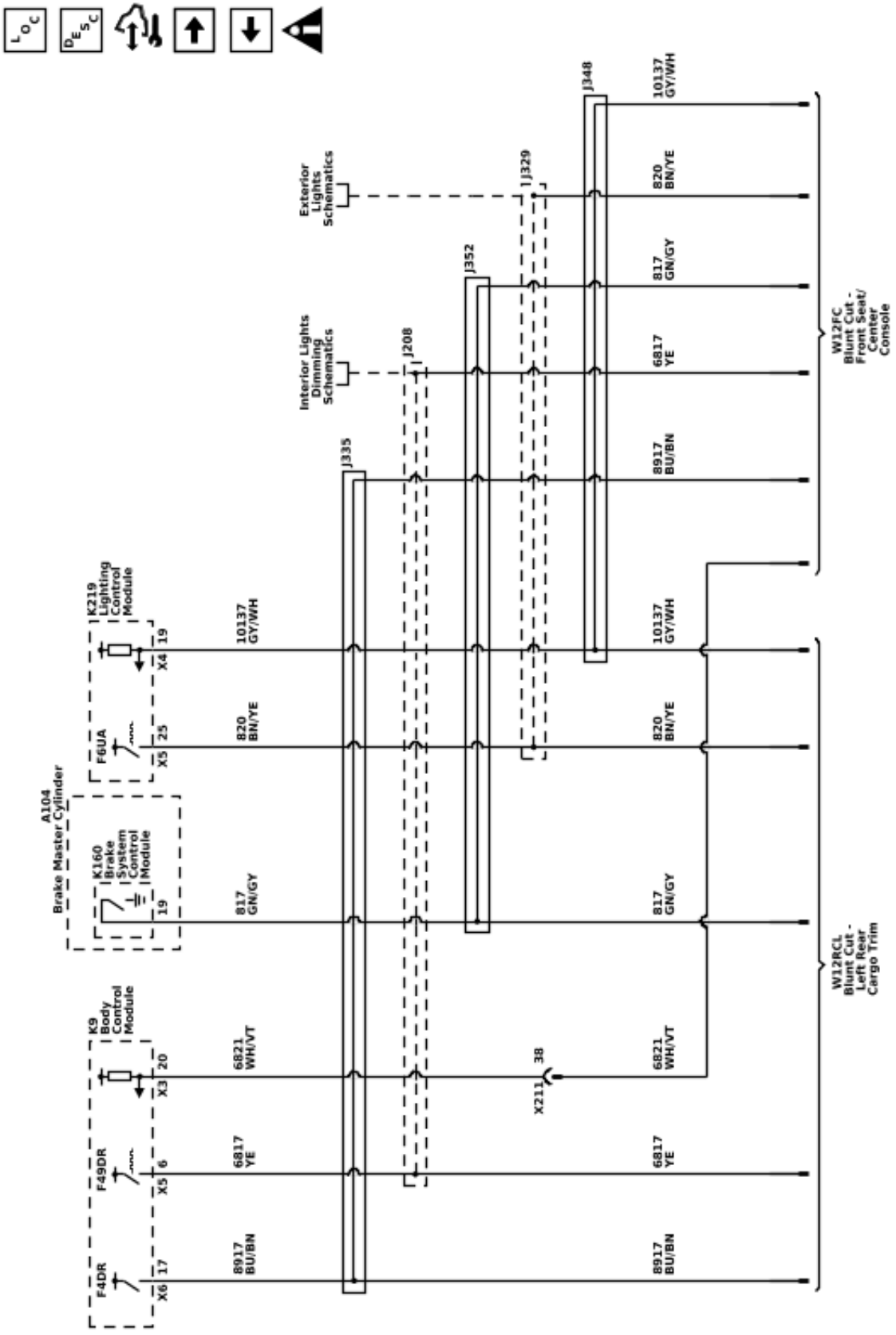

6613397

Upfitter Provision Schematics (Special Purpose Vehicle Control Module (KGU))

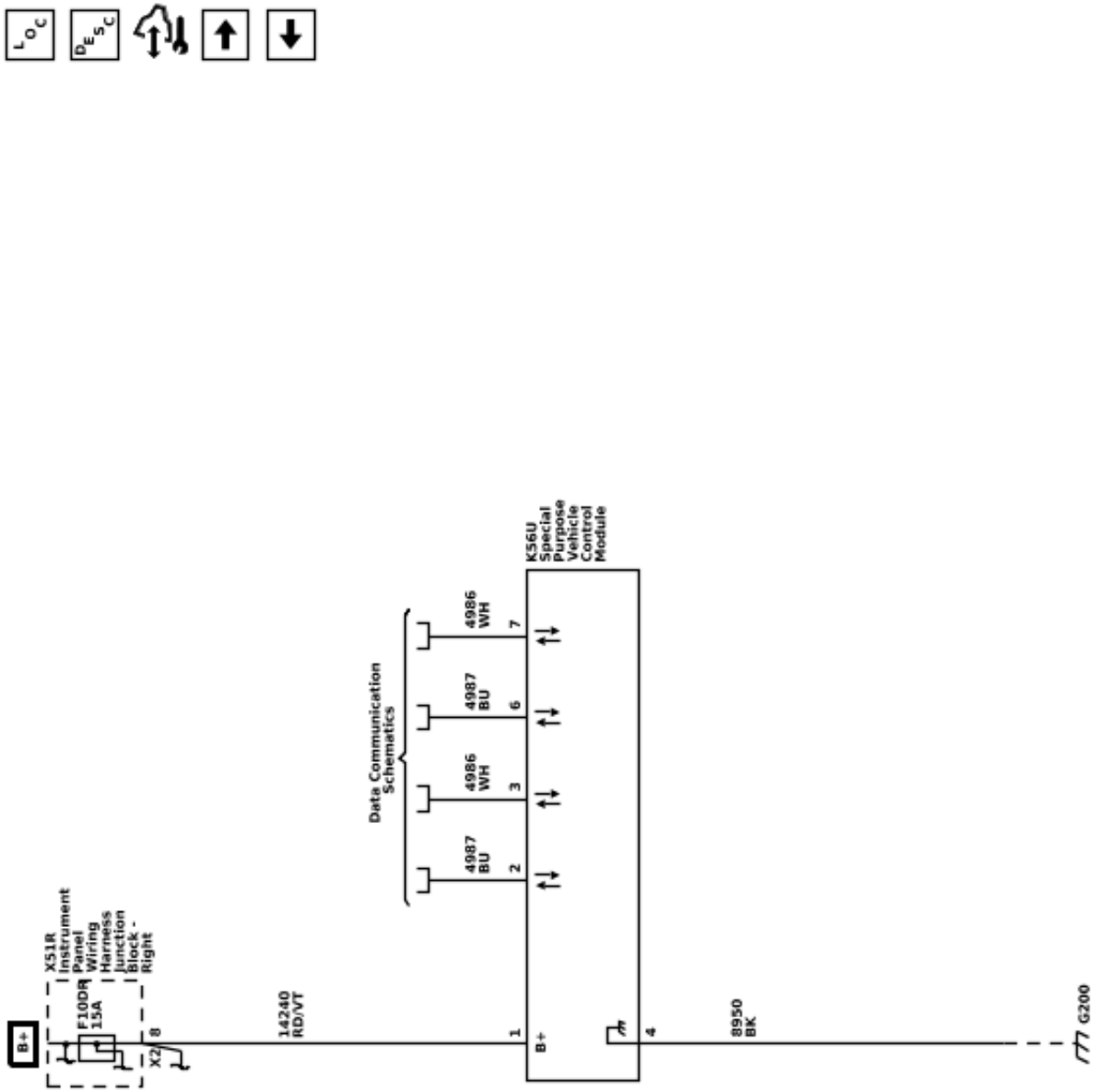

6613501

Upfitter Provision Schematics (Steering Wheel Switches (5W4 / 9C1))

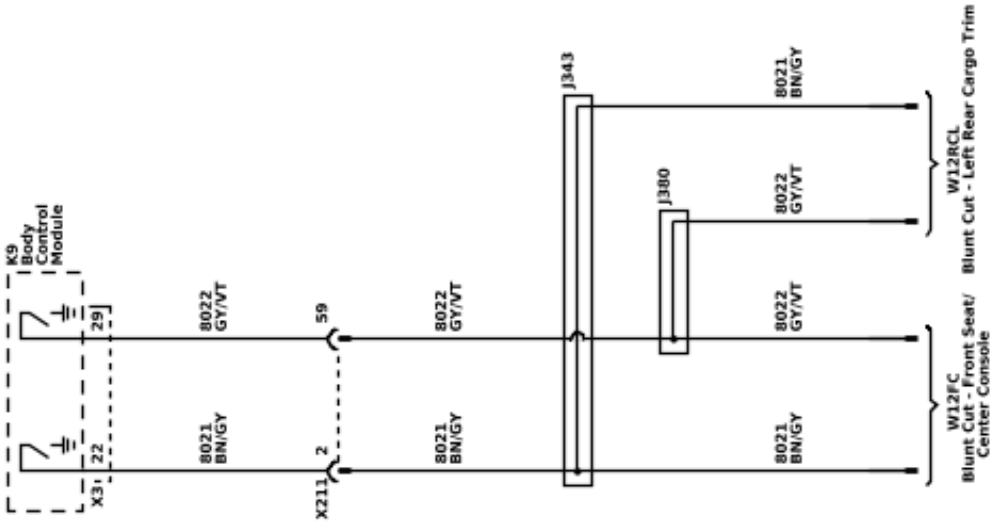

6613502

Upfitter Provision Schematics (Radio Microphone Provisions (5W4 / 9C1))

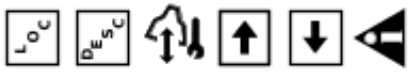

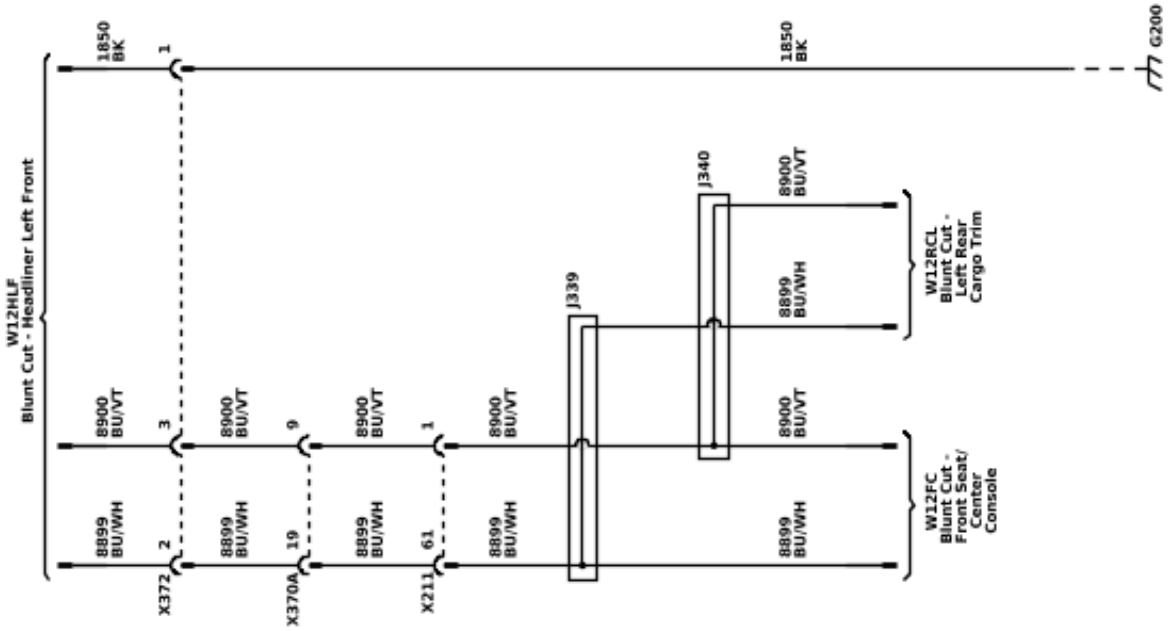

6613503

Upfitter Provision Schematics (Grille Lamp and Siren Speaker Provisions (5W4 / 9C1))

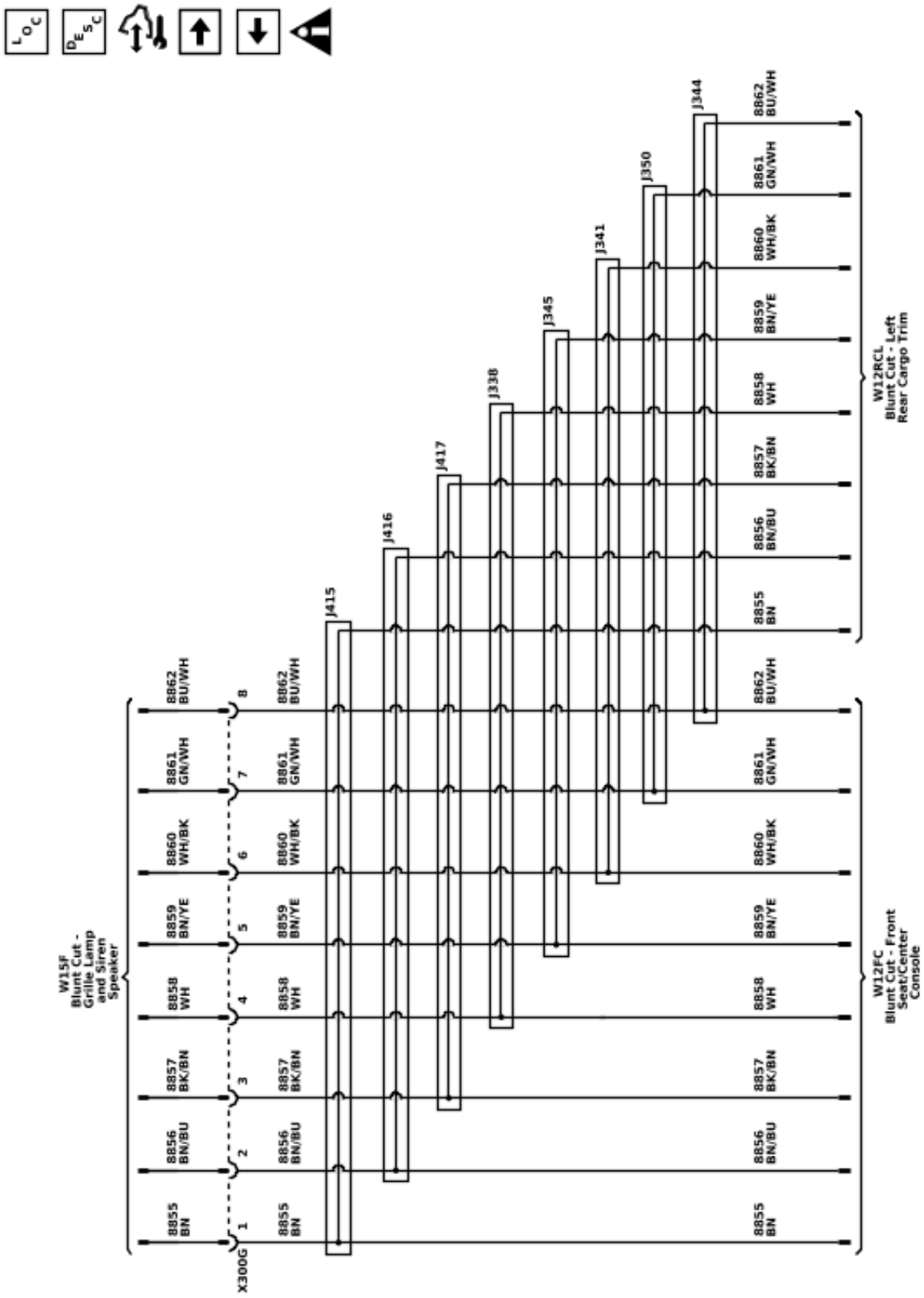

6613504

Upfitter Provision Schematics (Headlamps and Tail Lamps Flash Provisions (5W4 / 9C1))

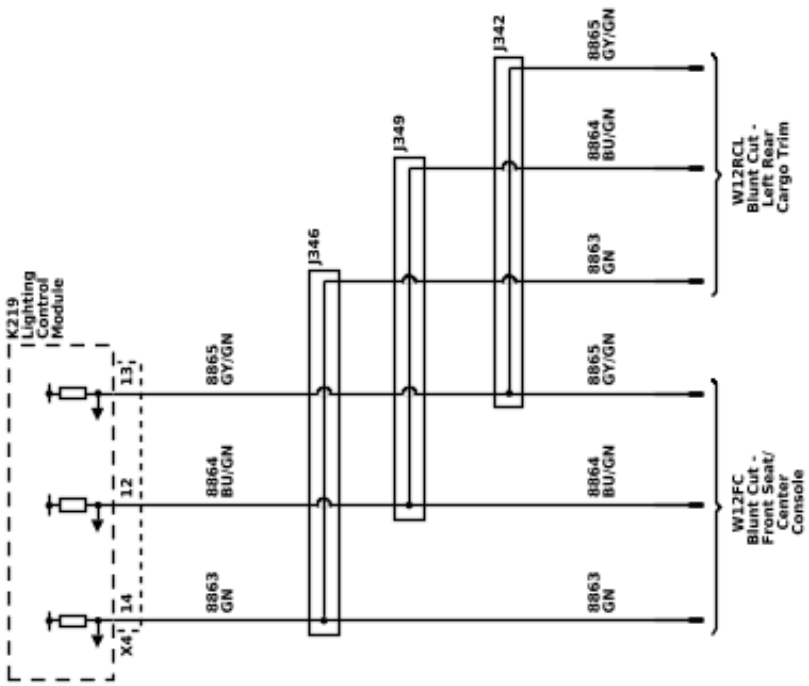

6613505

Upfitter Provision Schematics (Horn and Siren Control Provision (5W4 / 9C1))

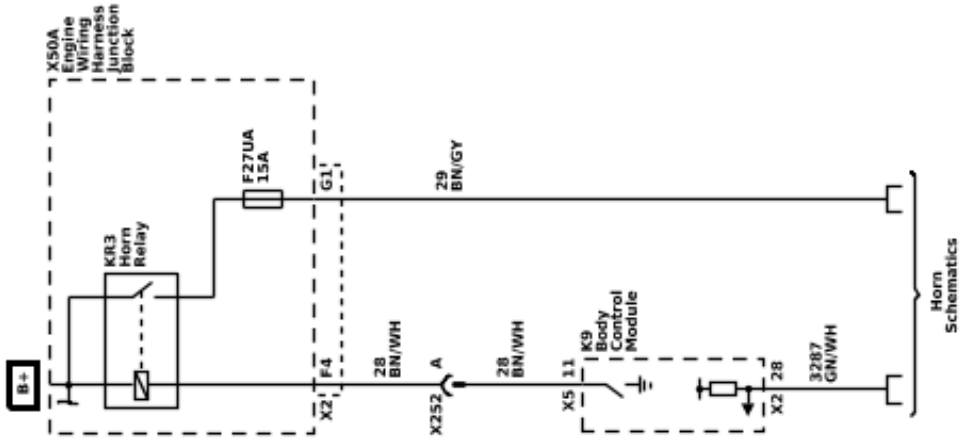

Upfitter Provision Schematics (Emergency Vehicle Warning Lamps (5W4 / 9C1))

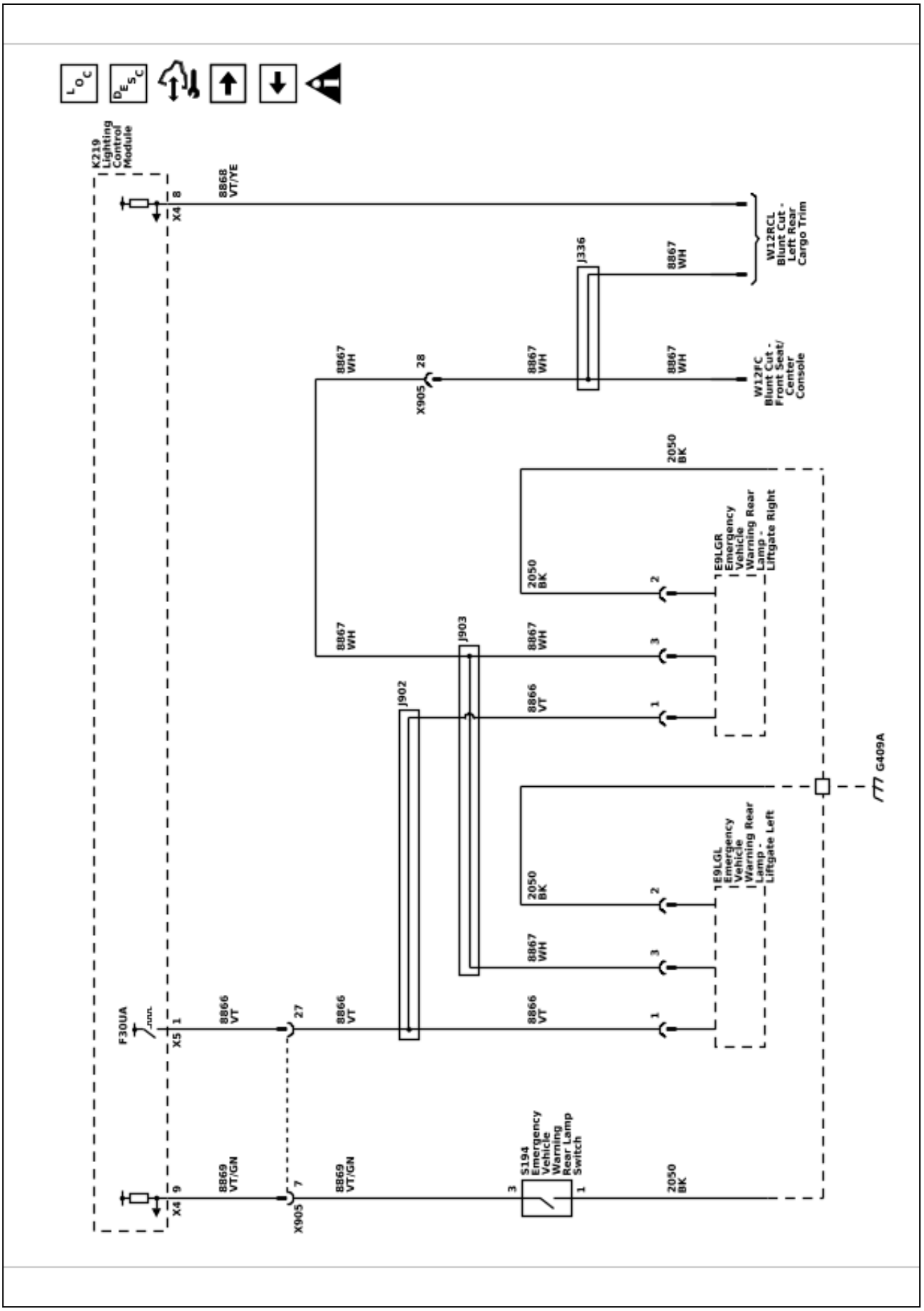

6613507

Upfitter Provision Schematics (Outside Rear View Mirror and Rear Window Strobe Provision - Left (5W4 / 9C1))

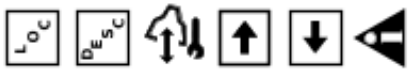

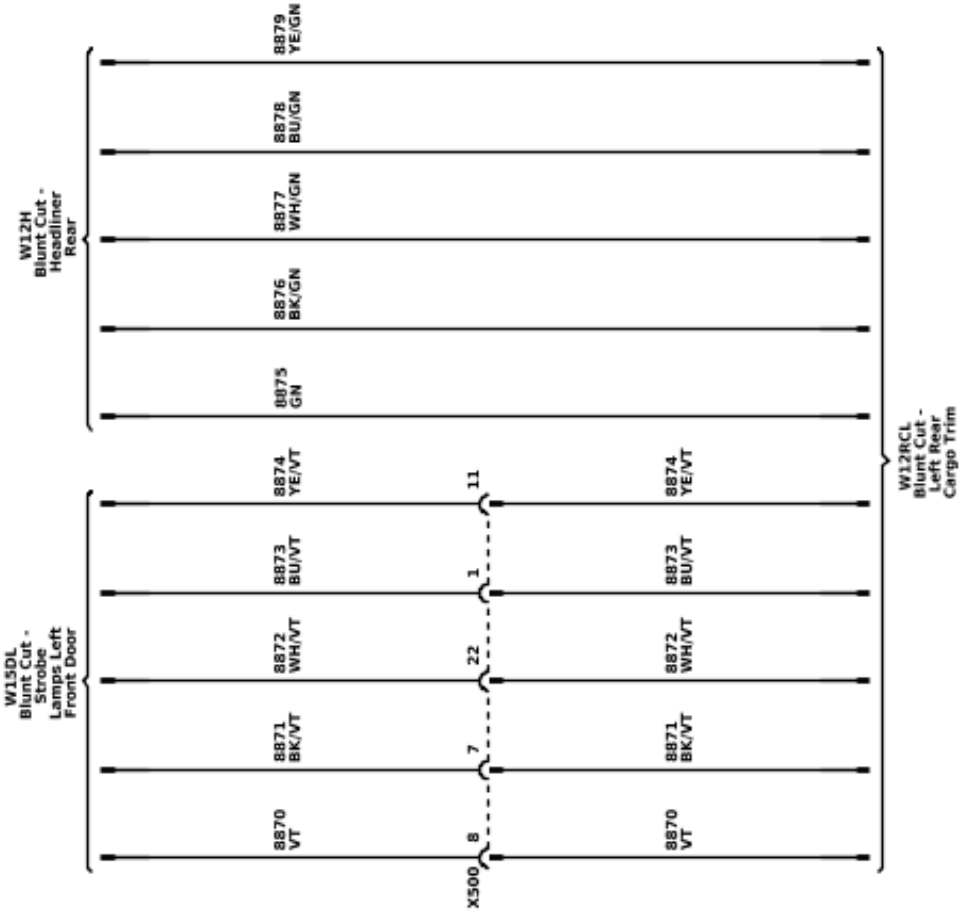

Upfitter Provision Schematics (Outside Rear View Mirror and Rear Window Strobe Provisions - Right (5W4 / 9C1))

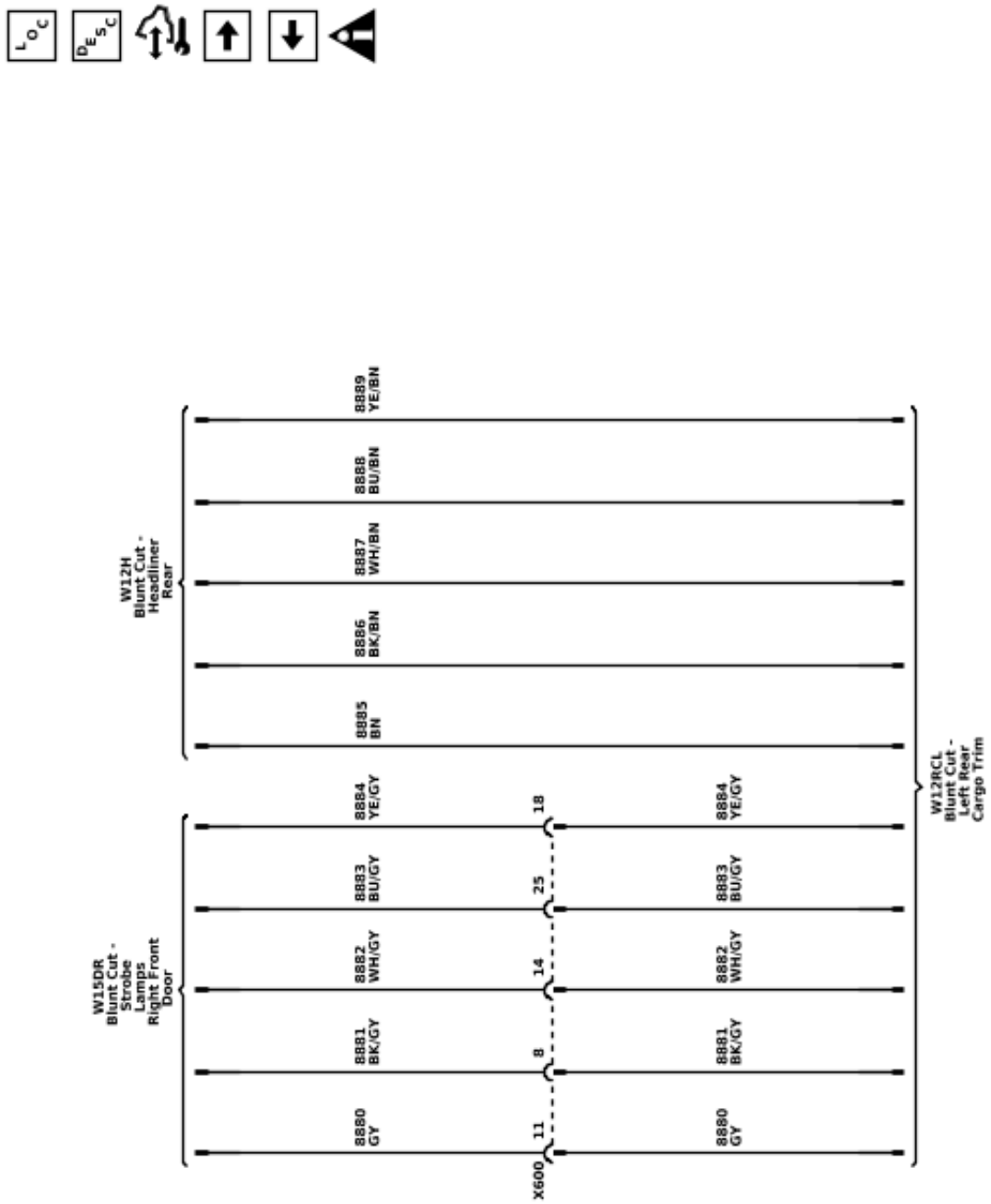

6613508

Upfitter Provision Schematics (Headlamp and Taillamp LED Strobe System Provisions (5W4 / 9C1))

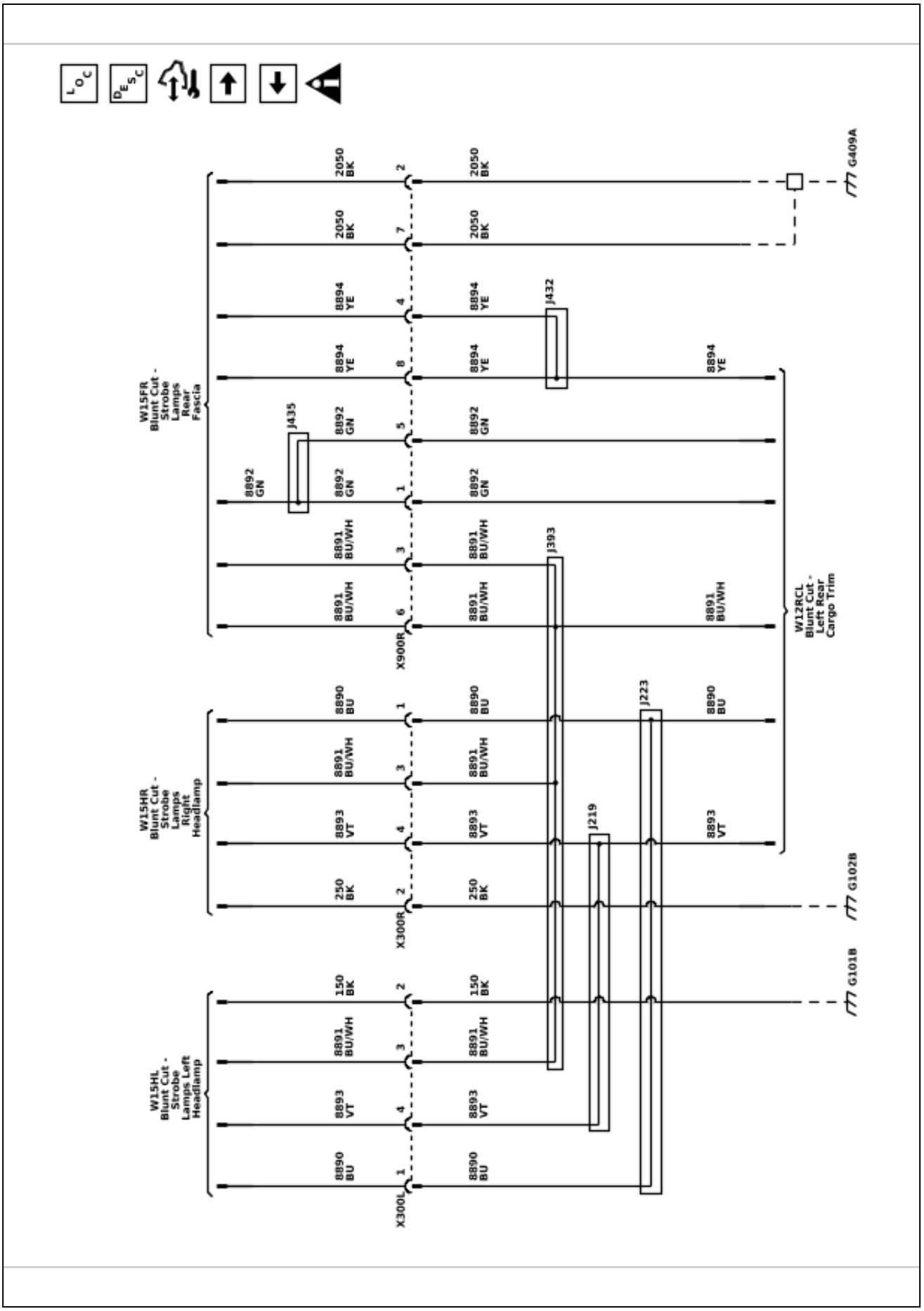

6613510

Upfitter Provision Schematics (LED Spot Lamps (5W4 / 9C1))

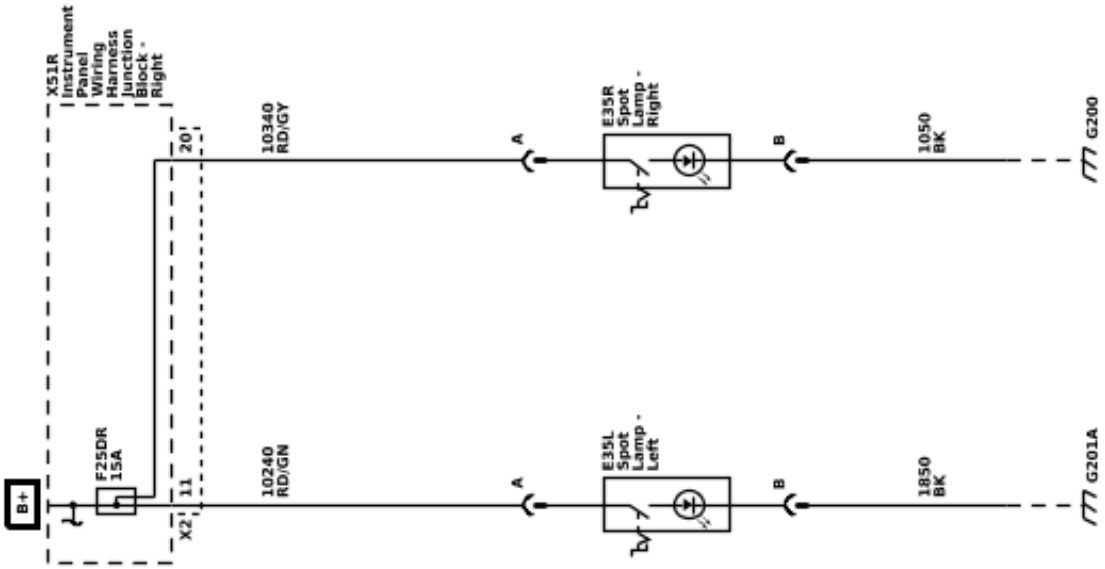

Upfitter Provision Schematics (Emergency Vehicle Reading Lamps (5W4 / 9C1))

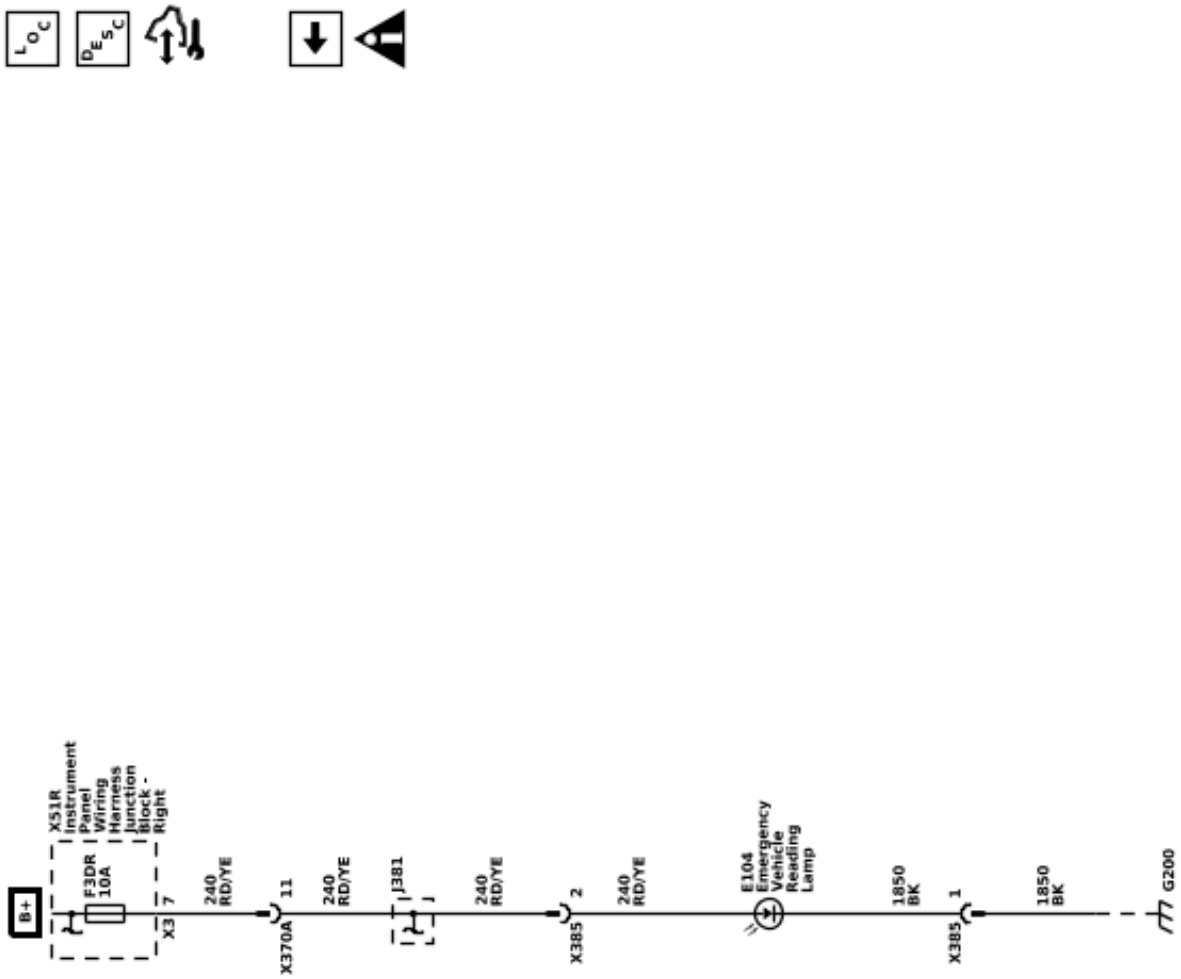

6613511

Description and Operation

Power Mode Description and Operation

Serial Data Power Mode Master

The K9 Body Control Module (BCM) is the Power Mode Master and the K56 Serial Data Gateway Module is the Back-Up Power Mode Master.

The Power Mode Master uses various vehicle status conditions and inputs to determine the desired vehicle power mode state. The Power Mode (Off, Accessory, Run, Propulsion, Start) is communicated to other modules via Serial Data and other electrical signals in order to provide the proper feature operation for the appropriate power mode.

If the Power Mode Master cannot control or determine the correct Power Mode, the Backup Power Mode Master will take over and become the vehicle Power Mode Master and place the vehicle into the proper Power Mode by communicating with other modules via Serial Data to provide the proper electrical signals to provide the proper feature operation for the appropriate power mode.

S38 On/Off Vehicle Switch

There are 5 power modes to convey driver intent:

- OFF – A low power mode that allows maximum stand time until next start
- ACCY – Allows use of certain features that require operator authorization (Power windows for example). Propulsion is specifically disallowed.
- RUN – All features enabled except propulsion (motive force)
- PROPULSION – All features enabled
- START - This will transition to PROPULSION, including turning off non-essential loads to provide additional power for starting.

Power Mode States

Customer Action	Expected Vehicle Power Mode	S38 Vehicle On/Off Switch BCM Scan Tool Parameter	S38 Vehicle On/Off Switch Voltages
Vehicle OFF, S38 On/Off Vehicle Switch not pressed, Transmitter in Range	Vehicle Off Mode	Inactive	1.4 – 3.0 V (Switch Pressed) 3.35 – 4.26 V (Switch Released) 4.5 — 5.0 V (Switch Disconnected)
Vehicle OFF, S38 On/Off Vehicle Switch not pressed, Transmitter out of Range/Away from vehicle	Vehicle Off Mode	Inactive	
Vehicle in any Power Mode EXCEPT OFF, then Press the S38 On/Off Vehicle Switch Foot On or Off the Brake Pedal, Transmitter in Vehicle	Vehicle Off Mode	Active (pushed) / Inactive (not pushed)	
Vehicle in Propulsion Mode, momentarily Press and Release the S38 On/Off Vehicle Switch Foot On or Off the Brake Pedal, Transmitter out of Range/Away from vehicle	Run Mode, With DIC Message No Remote Detected Press Brake to Restart	Active (pushed) Inactive (not pushed)	
Vehicle Off Power Mode, then Press the S38 On/Off Vehicle Switch for less than 5 s with foot Off the Brake Pedal; Transmitter in Vehicle	Vehicle Accessory Mode	Active (pushed) / Inactive (not pushed)	
Vehicle Off Power Mode, then S38 On/Off Vehicle Switch with foot On the Brake Pedal; Transmitter in Vehicle	Vehicle Start/Propulsion Mode (vehicle cranks then engine running (for Internal Combustion Engine) or Propulsion System Active for EV) power mode timeout is enabled	Active (pushed) / Inactive (not pushed)	
Vehicle Off Power Mode, then S38 On/Off Vehicle Switch with foot On the Brake Pedal for 5 to 10 s; Transmitter in Vehicle	Vehicle Start/Propulsion Mode (vehicle cranks then Propulsion Mode Active) power mode timeout will be disabled.	Active (pushed) / Inactive (not pushed)	

Customer Action	Expected Vehicle Power Mode	S38 Vehicle On/Off Switch BCM Scan Tool Parameter	S38 Vehicle On/Off Switch Voltages
Vehicle OFF Power Mode, then Press and Hold the S38 On/Off Vehicle Switch for 5 s with foot Off the Brake Pedal; Transmitter in Vehicle	Vehicle Run Mode (Ignition ON without the Propulsion system Active)	Active (pushed) / Inactive (not pushed)	
Vehicle OFF Power Mode, then Press and Hold the S38 On/Off Vehicle Switch for 5 s with foot Off the Brake Pedal; Transmitter in Vehicle	Vehicle Start/Propulsion Mode (vehicle cranks then Propulsion Active) power mode timeout is disabled	Active (pushed) / Inactive (not pushed)	
Vehicle Propulsion Mode with vehicle speed detected above 4 km/h (2.5 MPH) press and hold S38 On/Off Vehicle Switch for 2 s or press and release it 2 times within 5 S.	Vehicle will transition from Propulsion Mode to Run Mode (Ignition On Propulsion system Inactive).	Active (pushed) / Inactive (not pushed)	
NOTE: If the transmitter is not moved for more than 1 hour it will become inactive.			

Service Mode

Service Mode is the Run Power Mode with power mode timeout disabled. This can only be done with the Service Tool.

Automatic Power Mode Timeouts

Note: If the Transmitter/Fob remains stationary and is not moved for one hour, it will go to sleep and may create a fob not in range condition.

This system is designed to prevent batteries from going dead in the event the ignition is left on while unattended, it is also designed to shut the vehicle off if left running unattended. After a Power Mode timeout, the Power Mode Master is responsible for shutting down the or transitioning the vehicle into the low parasitic sleep state “OFF” Power Mode. This Power Mode timeout strategy uses Vehicle Speed, Vehicle Power Mode, Parked Status and other Vehicle Conditions to make the timeout determination.

Accessory Power Mode

The Accessory Power Mode will timeout after approximately 5 minutes. The timer will Start once the system has determined it is in the Accessory Power Mode status. After the timer expires the Power Mode will change to the OFF Power Mode.

Run Power Mode

If the conditions listed below are met the Run Power Mode will timeout after approximately 40 minutes if the transmitter is in range, or 20 minutes if the transmitter is out of range. The timer will Start once the system has determined it is in the Run Power Mode status and all of the following conditions are met. After the timer expires the Power mode will change to OFF Power Mode.

If any of the following conditions are not met and/or if there is a change in the Brake Pedal or Clutch Pedal status, the Run Mode timeout timer will be disabled, and the timer will restart after all of the conditions are met again.

- Vehicle in Run Mode (Vehicle powered up S38 On/Off Vehicle Switch Green indicator on Propulsion Mode Inactive)
- Propulsion is Inactive
- Vehicle in Park.
- Vehicle Speed is 0 KM/MPH.
- Fast Idle is inactive (If Equipped).
- PTO Remote Start Status is inactive (If Equipped).
- Particulate Filter Cleaning Status is Inactive (if Equipped)
- S38 Vehicle On/Off switch is held for more than 5 to 10 seconds while starting the vehicle. The actual time may vary based on model and/or year.

Propulsion Power Mode

If the following conditions listed below are met the Propulsion Power Mode will timeout after approximately 30 minutes if the transmitter is in range, or 15 minutes if the transmitter is out of range. The timer will Start once the system has determined it is in the Propulsion Power Mode status and all of the following conditions are met. After the timer expires the Power mode will change to the OFF Power Mode.

The Propulsion Power Mode timeout can be disabled with the vehicle in Off Power Mode, apply and continue to hold the brake pedal, then press and hold the S38 Vehicle On/Off switch for 5 to 10 seconds (the actual time may vary based on model and/or year). A DIC message will be displayed when Power Mode timeout is disabled.

If any of the following conditions are not met and/or if there is a change in the Brake Pedal or Clutch Pedal status, the Propulsion Mode timeout timer will be disabled, and the timer will restart after all of the conditions are met again.

- Vehicle in Propulsion Mode (Propulsion Active).
- Vehicle in Park.
- Vehicle Speed is 0 KM/MPH.
- Fast Idle is Inactive (If Equipped).
- PTO Remote Start Status is inactive (If Equipped).
- Particulate Filter Cleaning Status is Inactive (if Equipped)
- S38 Vehicle On/Off switch iss held for more than 5 to 10 seconds while starting the vehicle. The actual time may vary based on model and/or year.

Relay Controlled Power Mode

The BCM uses discrete push button switch inputs, transmitter in range status, current power mode state, and brake pedal position state to distinguish the correct power mode (Off, Accessory Mode, Run Mode, Start/Propulsion Mode). The BCM, after determining the desired power mode, will activate the appropriate relays for that power mode.

The retained accessory power relay remains on for a timed period after the Ignition Mode is OFF. Refer to *Retained Accessory Power Description and Operation 6-925* for more information on the retained accessory power function.

Push Button Start

The ignition mode switch has 2 LEDs that indicate the vehicle power mode Amber for Accessory Mode and Green for Run or Start/Propulsion Modes. When the vehicle is in the OFF mode, both LED's will be OFF. Momentarily pressing the S38 On/Off Vehicle Switch button once, brake pedal not applied, the vehicle will enter into the Accessory Mode and the Amber LED will illuminate. The Accessory Mode will timeout after approximately 5 min to help reduce battery drain. With the ignition OFF, brake pedal not pressed, then pressing and holding the S38 On/Off Vehicle Switch for 5 s will place the vehicle in Run Mode (Ignition ON without the Propulsion Mode Active). The vehicle will stay powered up for approximately 40 minutes if the transmitter is in range, or 20 minutes if the transmitter is out of range, and the Green LED will illuminate.

With the ignition OFF brake pedal pressed, then press and release the S38 On/Off Vehicle Switch, the vehicle will enter Start/Propulsion Mode and the Green LED will illuminate, the engine will crank and the engine will be running for Internal Combustion Engines (ICE), or Propulsion mode will go Active on Electric Vehicles (EV). The Propulsion Mode will timeout after approximately 30 minutes if the transmitter is in range, or 15 minutes if the transmitter is out of range. The timer will stop when the vehicle is shifted out of PARK or the brake pedal is pressed and released, the timer will reset after the vehicle is placed back in PARK with the Propulsion Mode Active.

Both LED's have the voltage supplied from the body control module (BCM). The ignition mode switch sends the ignition mode switch status to the passive entry passive start module (PEPS) and to the BCM. The PEPS module sends a redundant signal to the BCM with the ignition mode switch status.

Transport Mode

Transport Mode is designed to reduce the parasitic load of some modules during shipping and/or during vehicle storage. Some features may be disabled or have reduced functionality while Transport Mode is ON. Transport Mode is enabled and disabled by either of the following methods:

- With the Scan Tool Diagnostics > Body Control Module > Control Functions > Power Mode.
- Turning the hazard flashers ON, apply and hold the brake pedal, then press and hold the ignition mode switch for greater than 15 s. For vehicles equipped with a DIC a message Transport Mode On when it is enabled and Transport Mode Off when it is disabled will be displayed for a predetermined amount of time. For vehicles equipped without a DIC, the battery indicator light will constantly flash on the Instrument Cluster when Transport Mode is enabled.

Battery Saver Mode

There are 7 different Battery Saver Modes. Battery Saver Modes 1 to 3 occur in Accessory and Run Power Modes (vehicle on propulsion system Inactive) if the battery voltage drops below approximately 11.5 V. Battery Saver Modes 4 to 7 occur in the Off Power Mode only. Battery Saver Modes 4 to 7 may set DTC's.

- Battery Saver Mode 1: DIC message "Battery Low, Start Vehicle", 4 chimes
- Battery Saver Mode 2: DIC message "Battery Low, Start Vehicle", Load Shed Level 3 is activated
- Battery Saver Mode 3: DIC message "Battery Low, Start Vehicle", Radio/Infotainment shut off, Load Shed Level 3 active

- Battery Saver Mode 4: Battery Saver Mode Ignition Off – Parasitic Current draw of 100 mA or greater
- Battery Saver Mode 5: Battery Saver Mode Ignition Off – Parasitic Current draw of 1 A or greater
- Battery Saver Mode 6: Battery Saver Mode Ignition Off – Battery Voltage less than 12.0 V
- Battery Saver Mode 7: Battery Saver Mode Ignition Off – Battery Voltage less than 11.6 V

Load Shedding

Prior to Load shedding Idle Boost will occur, the idle speeds will be increased by 25 to 300 RPM to help maintain a normal battery voltage. Idle Boost may be noticeable to the driver. If the battery voltage continues to drop below a normal state then load shedding will go active and it will start to reduce electric loads for components that will not impact the safe operation of vehicle. At load shed levels 2 and 3 a DIC message will be displayed “Reducing Features To Save Battery”. When load shedding is active the customer may begin to notice features starting to have reduced functions or may become inoperative. Examples of affected loads are radio, HVAC blower(s) front and rear (if equipped), heated/ventilated seats, heated mirrors, rear defogger and other devices with heavy electrical draws. Idle Boost and load shed levels can be observed with the scan tool.

Idle Boost 1
Idle is increased by 25-100 RPM and generally is not noticeable to most drivers.

Idle Boost 2
Idle is increased by 50–200 RPM and generally is not noticeable to most drivers.

Idle Boost 3
Idle is increased by 100–300 RPM and may be noticeable to most drivers.

Load Shed Level 1
Reduces load current by 25%.

Load Shed Level 2
Reduces load current by 50%.

Load Shed Level 3
Electric loads for components that will not impact the safe operation of vehicle will be turned Off.

BCM Awake/Sleep States

The BCM is able to control or perform all of the BCM functions in the awake state. The BCM enters the sleep state when active control or normal monitoring of system functions has stopped and a time limit has passed. The BCM must detect certain wake-up inputs before entering the awake state. The BCM monitors for these inputs during the sleep state.

The BCM will enter the awake state if any of the following wake-up inputs are detected:

- Activity on the serial data line
- Detection of a battery reconnect
- Any door open signal
- Headlamps ON
- Ignition ON
- Park lamps ON
- Keyless entry or remote start message

The BCM will enter a sleep state when all of the following conditions exist:

- Ignition OFF, transmitter is out of range
- No activity exists on the serial data line.
- No outputs are commanded.
- No delay timers are actively counting.
- No wake-up inputs are present.

If all these conditions are met, the BCM will enter a low power or sleep condition.

Retained Accessory Power Description and Operation

Retained Accessory Power

The Retained Accessory Power (RAP) & Interruptible RAP (IRAP) Circuits are controlled by the K9 Body Control Module (BCM). The BCM is the Power Mode Master, it utilizes various Vehicle inputs to determine the Vehicle Power Mode and sends this information via Serial Data and providing associated electrical signals to the entire vehicle for proper feature operation.

The BCM monitors the vehicles power modes, and door ajar/open switch status to determine whether the retained accessory power should be initiated and remain active or be terminated. The RAP output is optional based on the vehicles option contents. When utilized, the RAP Output control can be used to control a RAP Relay, it may provide direct power, or a serial data message to vehicle devices/modules from the BCM.

Retained Accessory Power Relay Coil Control Circuit (If Equipped)

The BCM keeps the device or relay (if equipped) energized during all power modes, except Off-Awake and Crank. The device(s) remain active for approximately 10 min after the Vehicle is placed into the OFF Power Mode, provided none of the doors are opened.

Retained accessory power will end when one of the following conditions are met:

- The BCM receives an input from any door ajar switch indicating the opening of the door after the OFF Power Mode is achieved.

Note: If the BCM receives a door open/ajar active signal when the vehicle is placed into the OFF Power Mode, the retained accessory power will not initiate.

- The BCM internal timer for the retained accessory power expires after approximately 10 min.

Systems powered by the retained accessory power control circuit during the retained accessory power mode are as follows:

Note: The vehicle may not be equipped with all components as listed below.

- 12 V Accessory Power Receptacle
- Cigarette Lighter Receptacle
- Window Switches
- Sunroof Control Module (If Equipped)
- Sunroof Switch (If Equipped)
- Mobile Device Wireless Charger Module
- Mobile Telephone Control Module (If Equipped)
- Traffic Data Receiver (If Equipped)
- Transmission Shift Lever Position Indicator (w/floor mounted console gear shift)

Serial Data Controlled Retained Accessory Power

Retained accessory power systems controlled by serial data are as follows:

Radio

Radio retained accessory power activation/termination is the same as relay operation with one exception; the only door that will turn the radio off during retained accessory power is the driver door open/ajar switch. The USB Ports will function the same as the radio.

Vehicle Communication Interface Module (VCIM) (Onstar®) (If Equipped)

VCIM RAP activation/termination is the same as radio operation with 1 exception; if there is an active call and the vehicle is placed in the OFF Power Mode, the VCIM will remain in RAP mode, and keep the radio in RAP mode until the call is terminated.

Interruptible Retained Accessory Power

The Power Mode Master (PMM) Controls components as needed If equipped with a RAP relay, the BCM controls the Retained Accessory Power with an exception, Interruptible Retained Accessory Power (IRAP) is deactivated during transmitter authentication. During Transmitter Authentication the PMM will deactivate components including IRAP to prevent Radio Frequency (RF) Interference (RFI) that may cause a “NO REMOTE DETECTED” message to be displayed on the drivers information center.

Note: If transmitter Authentication occurs while in Run or Propulsion Modes, it is normal to for IRAP to be interrupted momentarily (i.e. items connected to auxiliary power ports or chargers may momentarily go off then come back on).

If a remote transmitter was not been previously detected, Transmitter Authentication can occurs under any of the following conditions:

- The drivers side front door is opened.
- The drivers side rear door is opened.
- The S38 Vehicle On/Off Switch is pressed.

Special Purpose Vehicle Module Description and Operation

Special Purpose Vehicle Module

The K56U Special Purpose Vehicle Module is an interface module that allows the Upfitter to interface with GM vehicle’s secure CAN networks to request predefined actions and to indirectly monitor key vehicle data that is available on the vehicle network.

The module is available to be ordered by dealer or as an Accessory to be installed. If ordered by the dealer it will be installed and programmed by the assembly plant with the output controls disabled. If ordered as an Accessory it will need to be installed on the vehicle, programmed and configured.

Input Controls

The Input Controls are Defaulted on and a GM approved Upfitter Switch must be installed to operate the appropriate Output control that must be enabled by the Upfitter. The input circuits may set a DTC if a non approved switch is installed.

Switches

There are 5 predefined functions that may be requested by switching analog inputs to the required input voltage range.

Refer to *https://www.gmupfitter.com/* for details on all available options

Output Controls

The SPVM has ten outputs that can be configured with a user interface to allow outputs to be switched ON or OFF based on the data that is monitored and available from the GM vehicle network.

Input/Output Configuration

Inputs:

- Battery Power
- Ground
- High Speed CAN (hi/lo)
- 10 Analog Inputs (0.5A Maximum load)

Outputs:

- High Speed CAN (hi/lo)
- 10 Digital Outputs

Module Configuration

Refer to *https://www.gmupfitter.com/*

Section 7

Safety and Security

Driver Assistance Systems **7-3**
- **Schematic and Routing Diagrams** **7-3**
  - Driver Assistance Systems Schematics 7-4
- **Description and Operation** **7-15**
  - Active Safety System Description and Operation (with UKL) 7-15
  - Active Safety System Description and Operation (without UKL) 7-19
  - Adaptive Cruise Control Description and Operation 7-23
  - Forward Collision Alert Description and Operation (without UGN) 7-29
  - Forward Collision Alert Description and Operation (with UGN) 7-31
  - Lane Keep Assist Description and Operation 7-31
  - Safety Alert Seat Description and Operation 7-33
  - Side Blind Zone Alert Description and Operation 7-34
  - Super Cruise Description and Operation 7-36

Driver Monitoring and Occupant Detection **7-38**
- **Schematic and Routing Diagrams** **7-38**
  - Driver Monitoring Schematics 7-39
  - Occupant Detection Schematics 7-40
- **Description and Operation** **7-41**
  - Driver Monitoring Description and Operation 7-41

Immobilizer **7-43**
- **Schematic and Routing Diagrams** **7-43**
  - Immobilizer Schematics 7-44
- **Description and Operation** **7-45**
  - Immobilizer Description and Operation 7-45
  - Remote Vehicle Speed Limiting Description and Operation 7-46

Parking Assistance Systems **7-47**
- **Schematic and Routing Diagrams** **7-47**
  - Parking Assistance Systems Schematics 7-48
- **Description and Operation** **7-51**
  - Parking Assist Description and Operation (UD5) 7-51
  - Parking Assist Description and Operation (UKZ) 7-52

Remote Functions **7-57**
- **Schematic and Routing Diagrams** **7-57**
  - Remote Function Schematics 7-58
- **Description and Operation** **7-64**
  - Garage Door Opener Description and Operation 7-64
  - Keyless Entry System Description and Operation 7-64

Seat Belts **7-69**
- **Schematic and Routing Diagrams** **7-69**
  - Seat Belt Schematics 7-70
- **Description and Operation** **7-72**
  - Seat Belt System Description and Operation 7-72

Supplemental Restraints **7-74**
- **Schematic and Routing Diagrams** **7-74**
  - SIR Schematics 7-75
- **Description and Operation** **7-79**
  - Supplemental Inflatable Restraint System Description and Operation 7-79

Theft Deterrent **7-83**
- **Schematic and Routing Diagrams** **7-83**
  - Theft Deterrent System Schematics 7-84
- **Description and Operation** **7-86**

Theft Systems Description and Operation 7-86

Safety and Security

Driver Assistance Systems

Schematic and Routing Diagrams

Driver Assistance Systems Schematics (Controls - Forward Collision Alert, Lane Keep Assist, and Super Cruise)

6613514

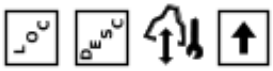

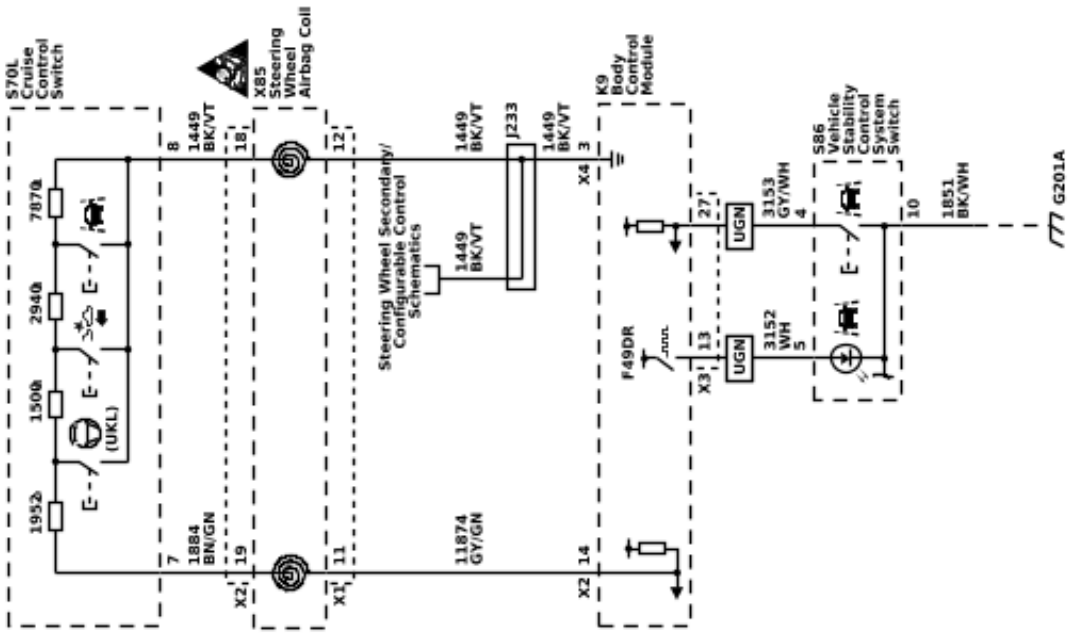

Driver Assistance Systems Schematics (Collision Alert Indicators and Safety Alert Seat)

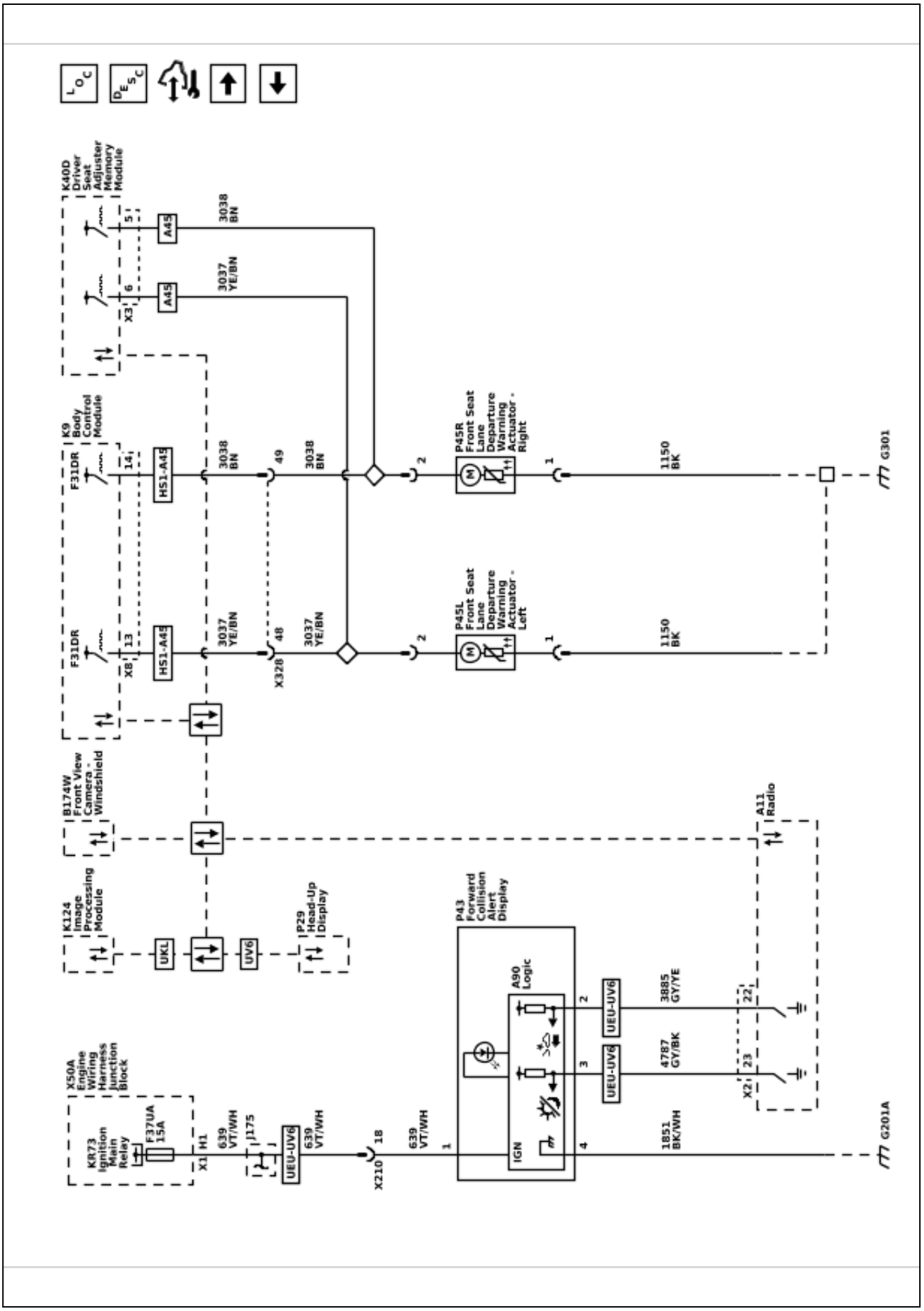

Driver Assistance Systems Schematics (Obstacle Detection - Side Blind Zone Indicators)

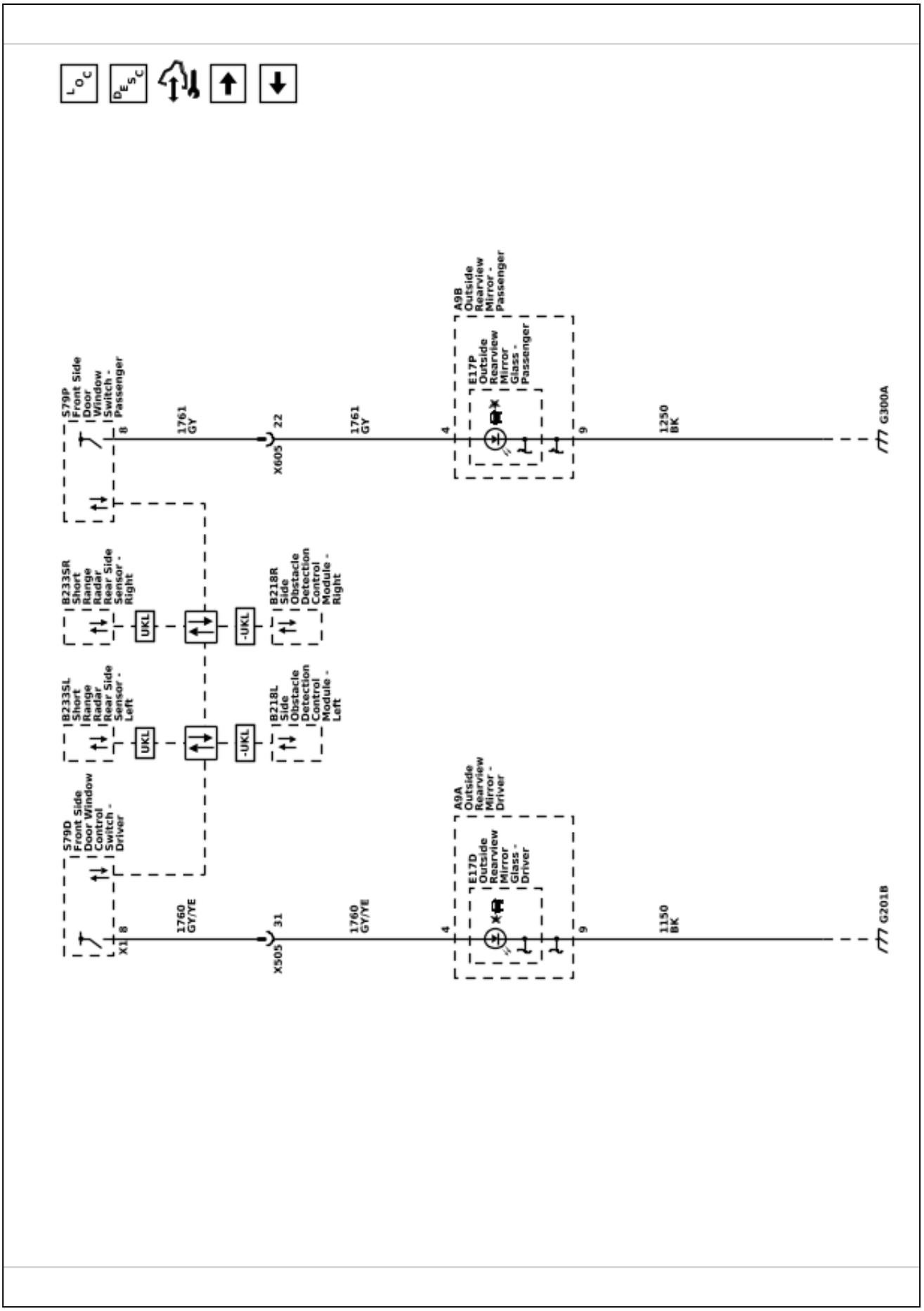

6613436

6613513

Driver Assistance Systems Schematics (Camera - Forward Collision Alert and Lane Keep Assist (UKL))

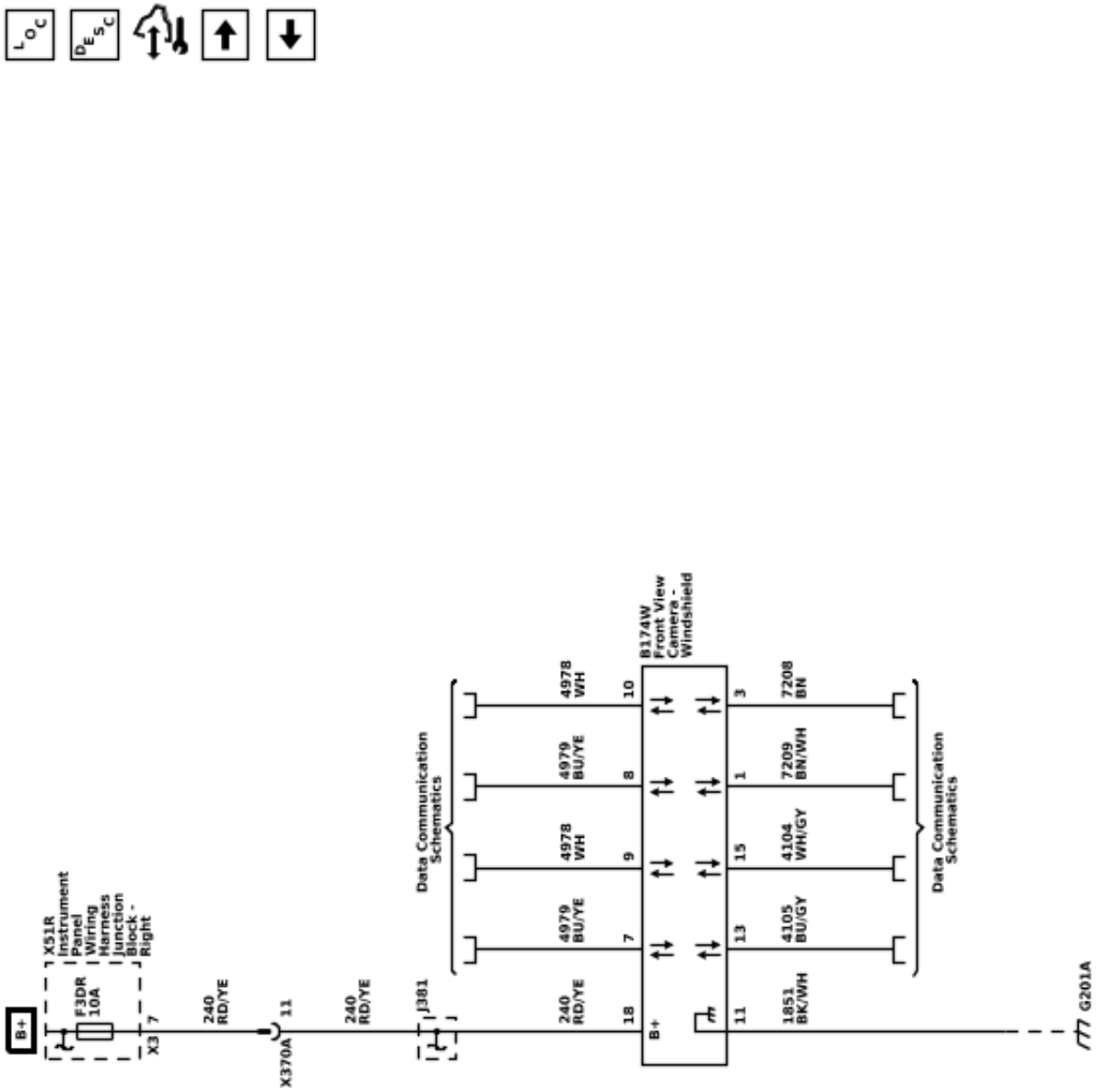

Driver Assistance Systems Schematics (Collision Mitigation - Front View Windshield Camera Power, Ground, Serial Data, and Forward Range Radar Sensor ((UGN / UHY) - UKL))

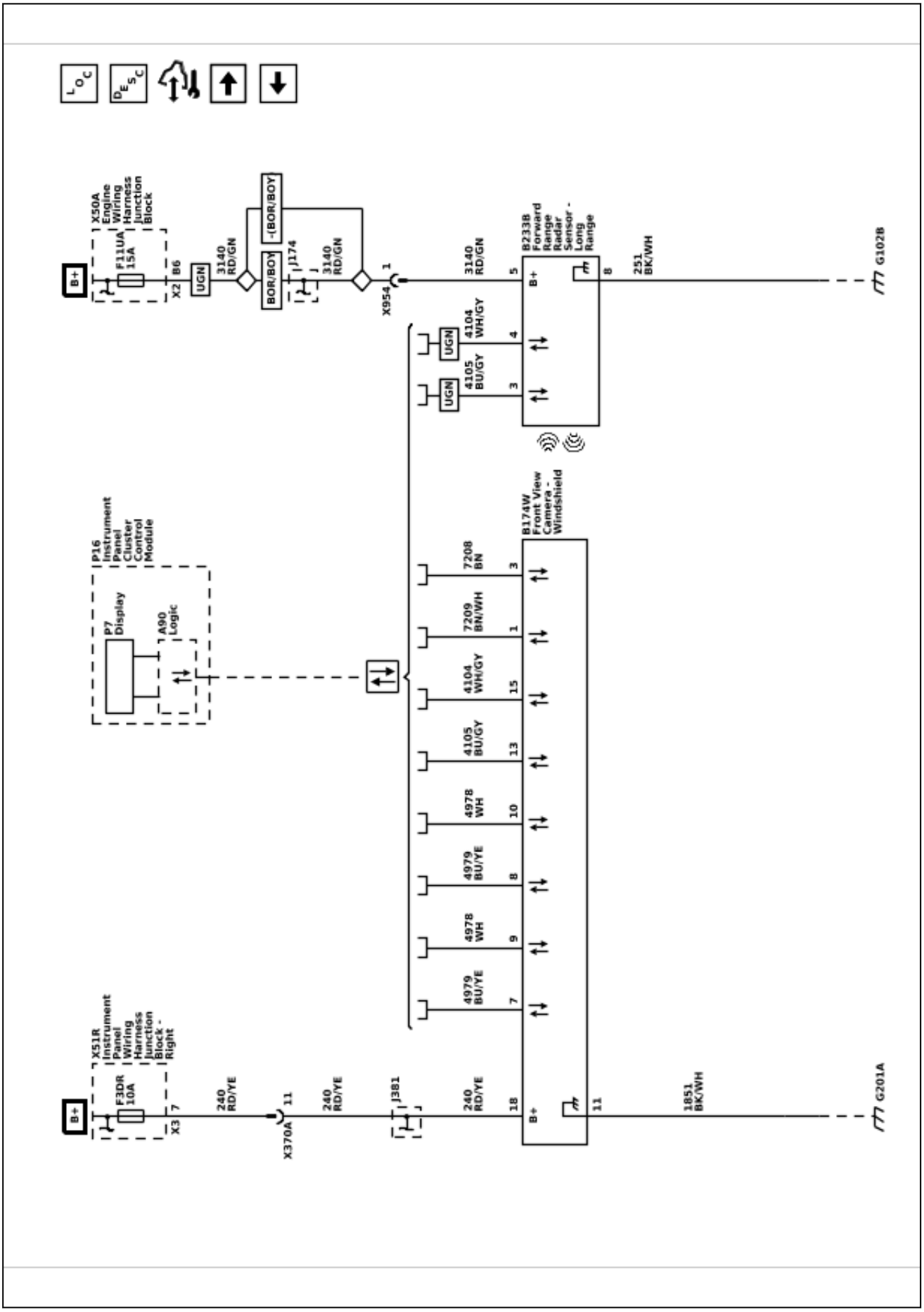

6613516

6613515

Driver Assistance Systems Schematics (Obstacle Detection - Rear Side Modules ((UKI / UKW) - UKL))

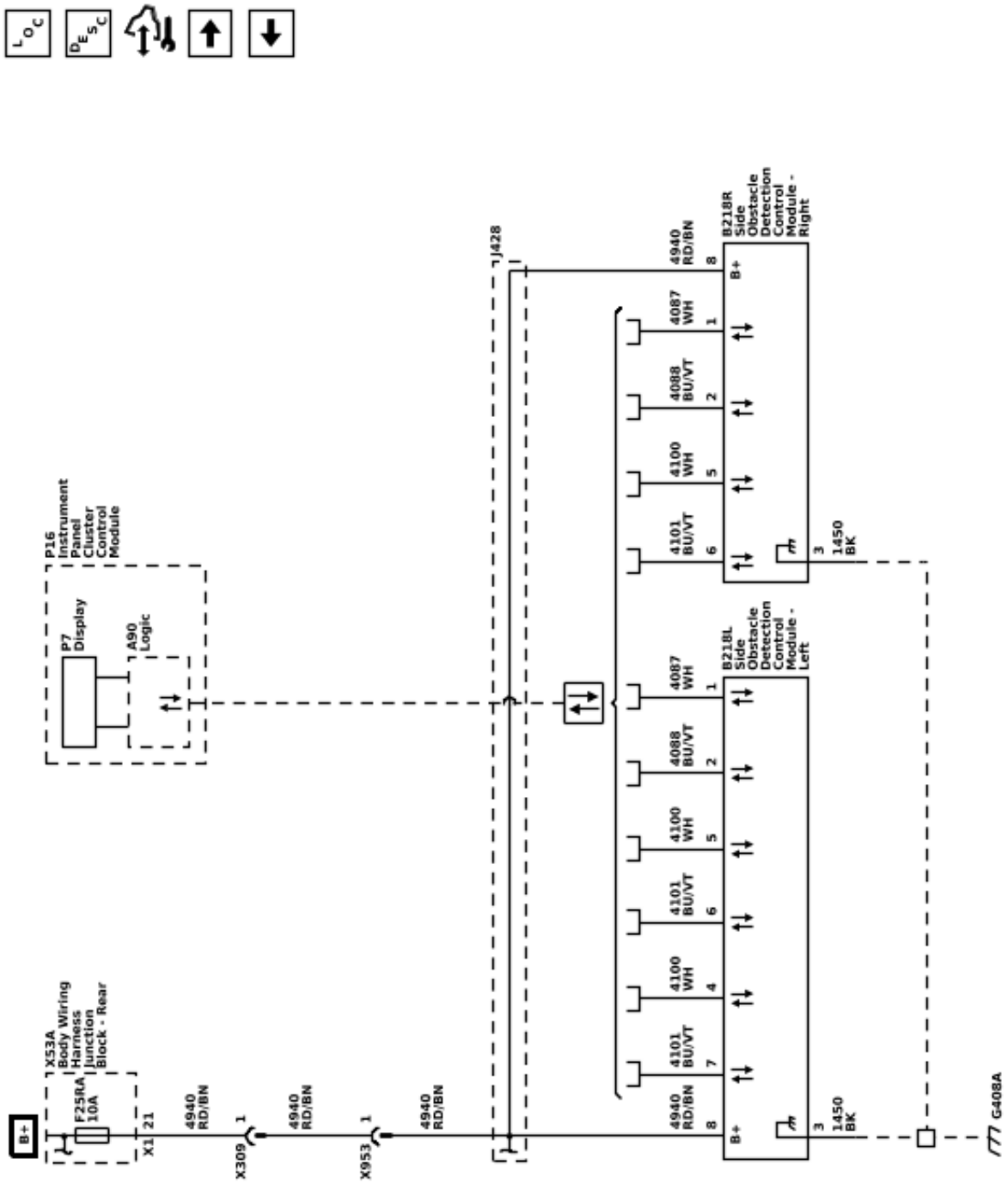

Driver Assistance Systems Schematics (Collision Mitigation - Module Power, Ground, Serial Data, References, and Vehicle Dynamic Sensor (UKL))

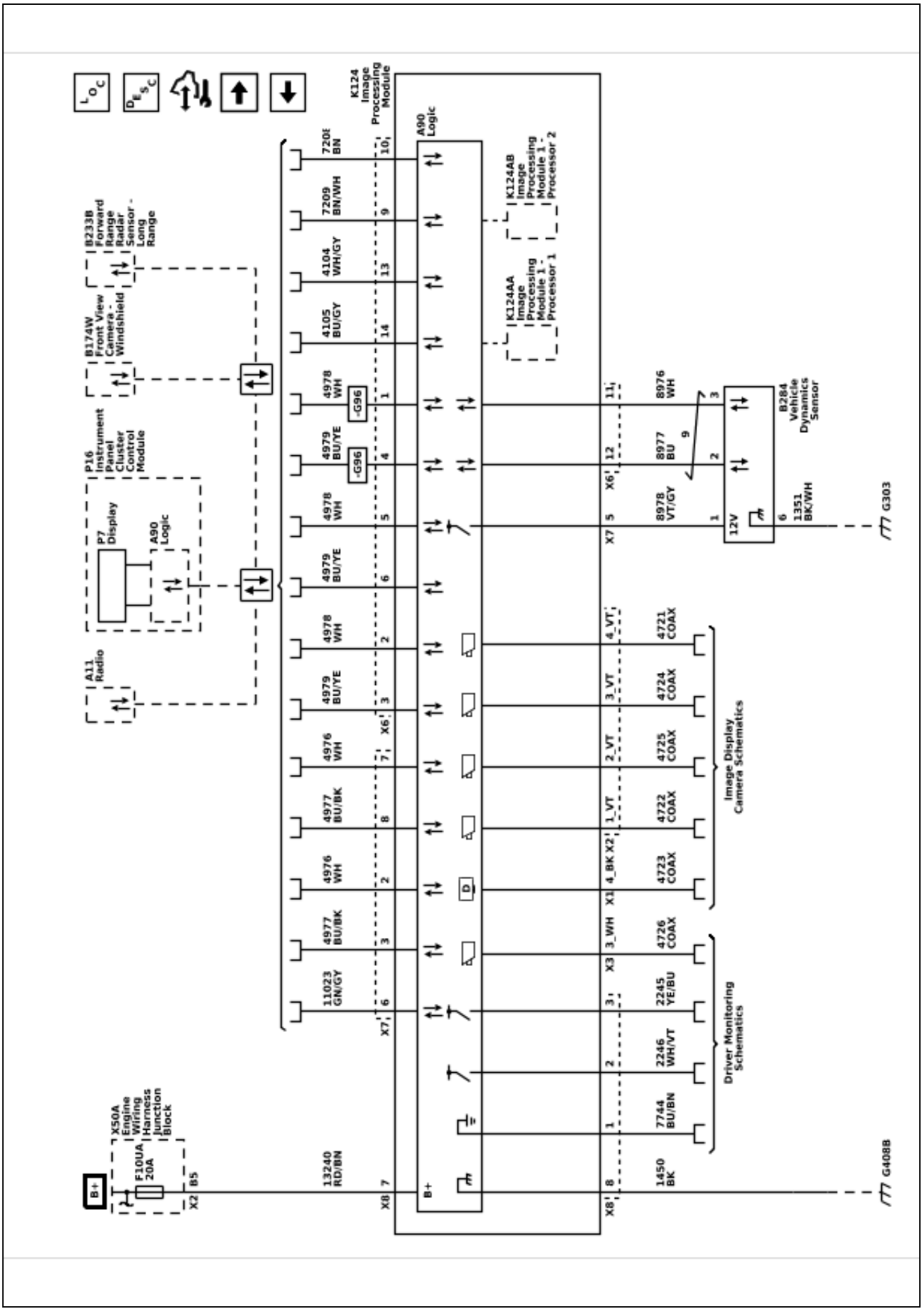

6613520

Driver Assistance Systems Schematics (Steering Wheel Lightbar and Touch Sensors (UKL))

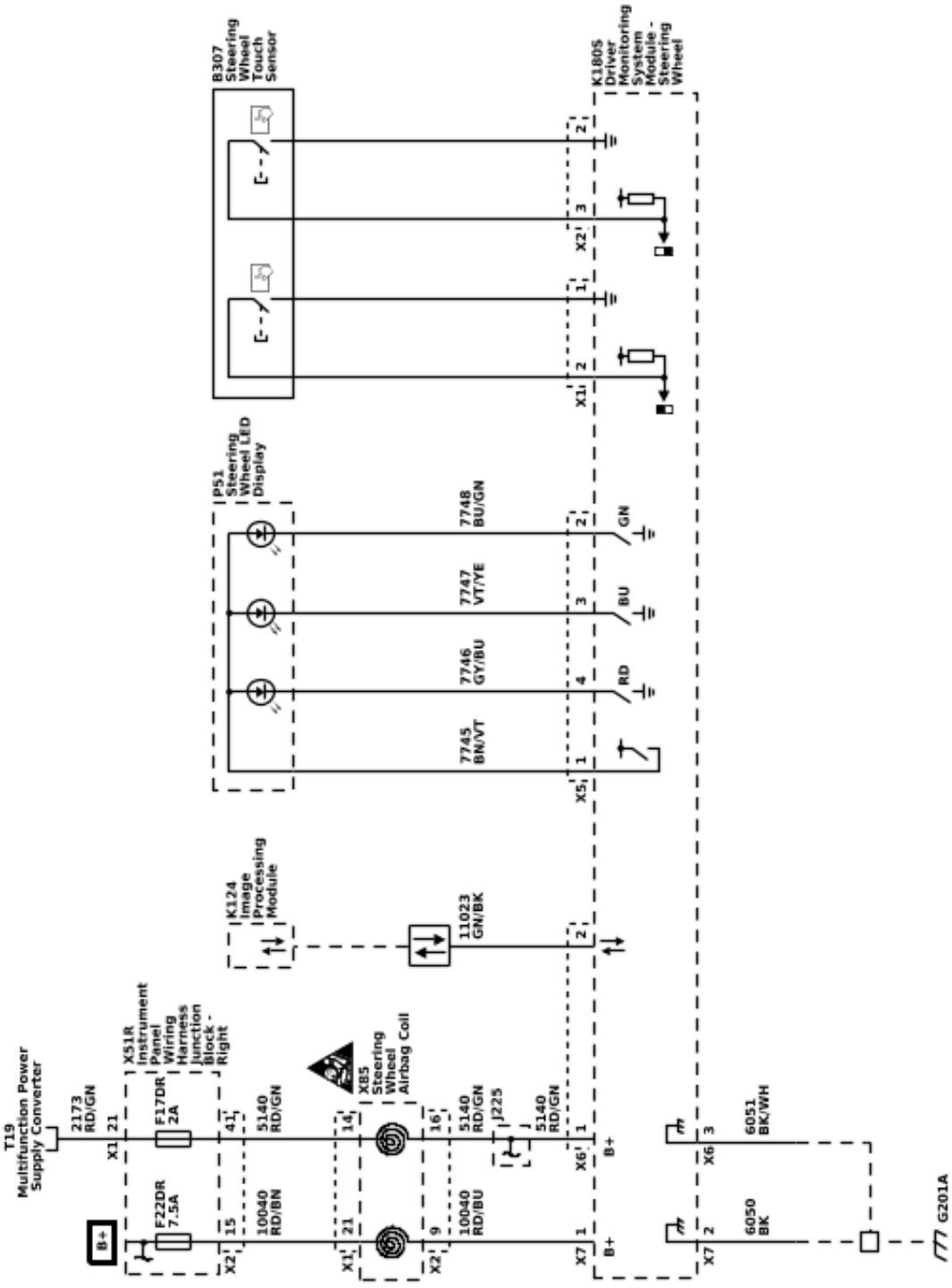

Driver Assistance Systems Schematics (Collision Mitigation - Front Radar Sensors (UKL))

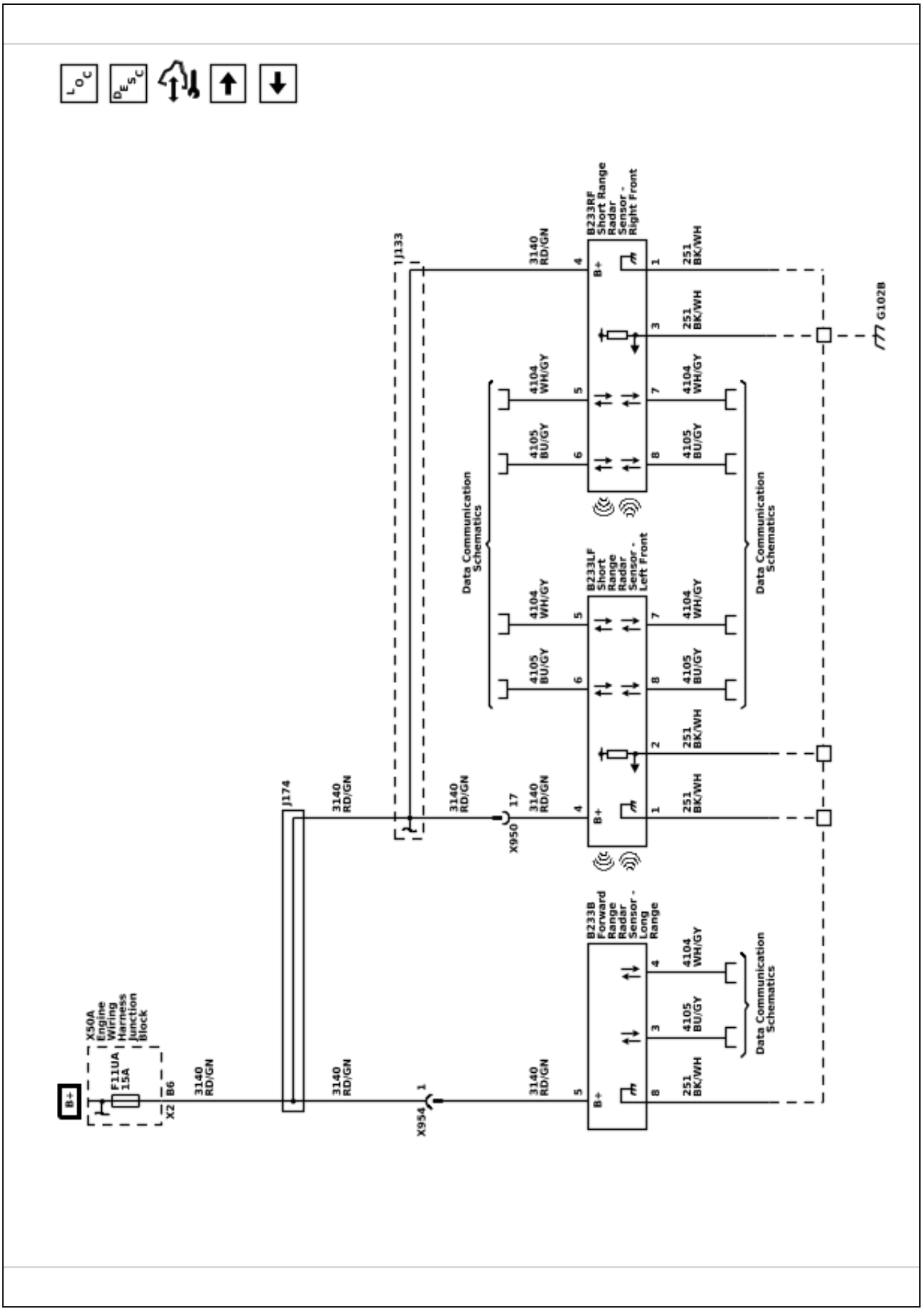

6613522

Driver Assistance Systems Schematics (Collision Mitigation - Rear Side Short Radar Sensors (UKL))

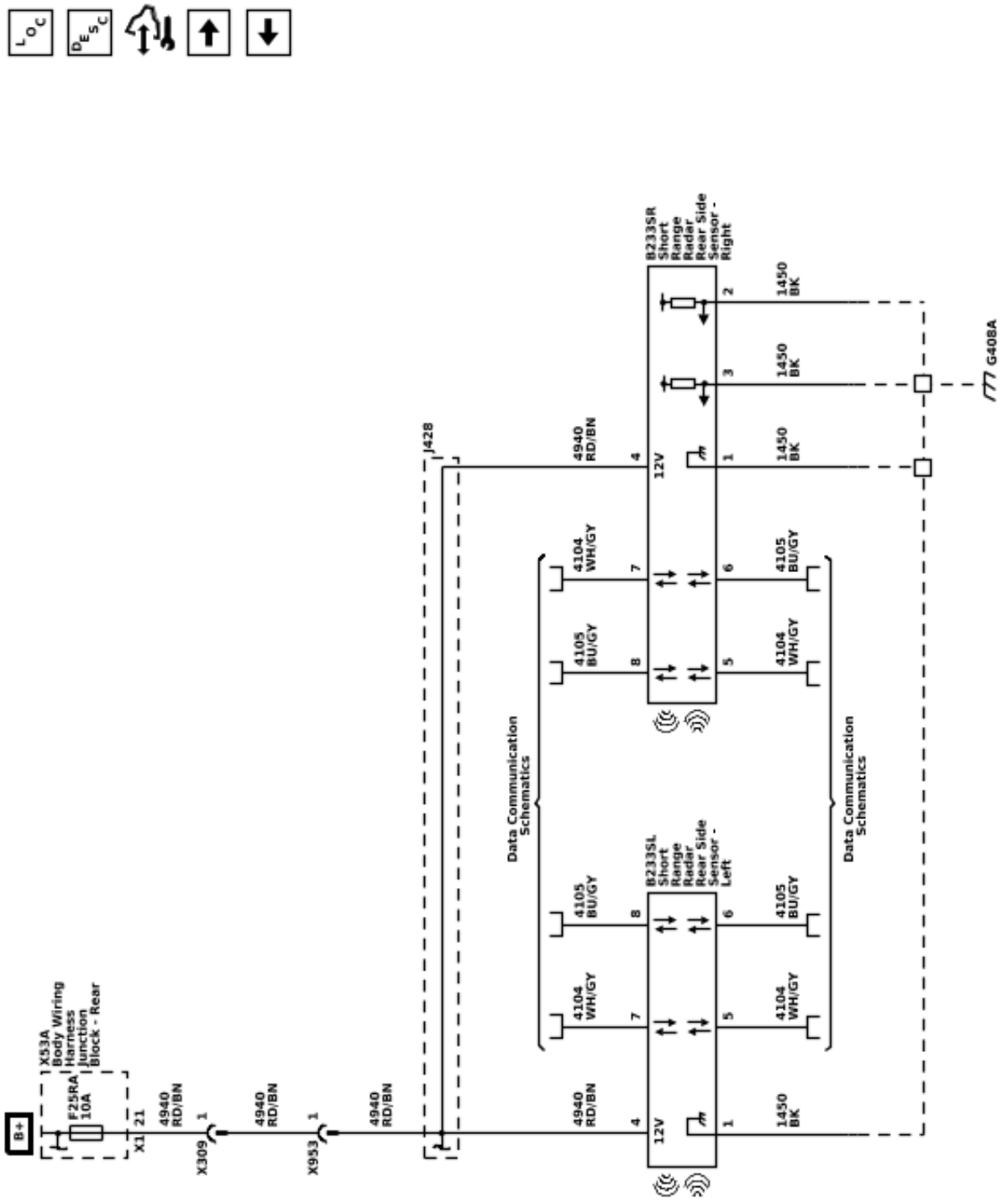

Driver Assistance Systems Schematics (Collision Mitigation - Short Range Rear Radars (UKI / UVZ))

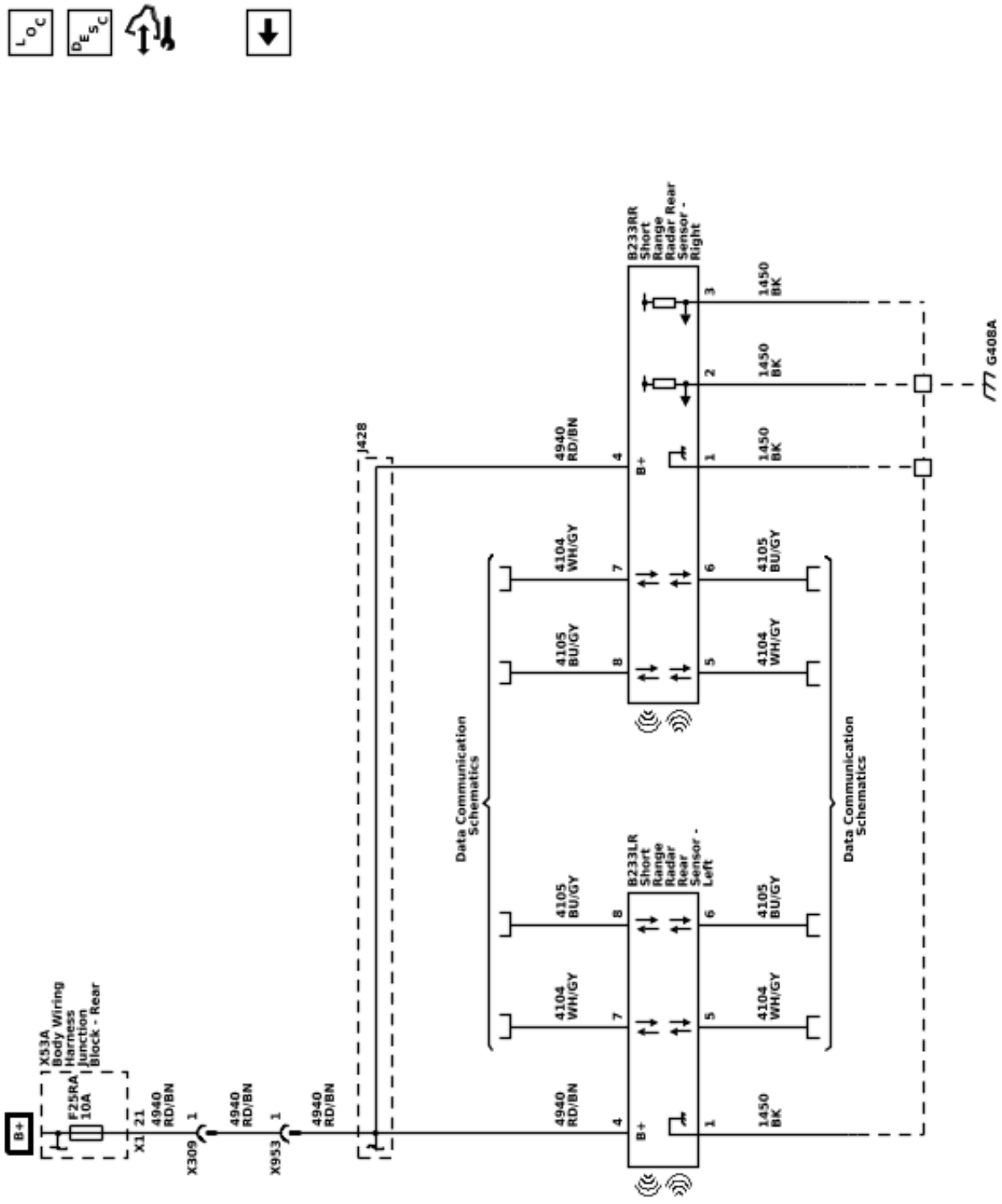

6613517

Description and Operation

Active Safety System Description and Operation (with UKL)

Active Safety Control Module

There is a single control module which contains both K124AA Image Processing Module 1 - Processor 1& K124AB Image Processing Module 1 - Processor 2 on this vehicle. The Super Cruise system can operate on only one processor, but it has a redundant for backup. For more information on Super Cruise, refer to *Super Cruise Description and Operation 7-36*.

Super Cruise

Super Cruise is a combination of many systems and modules. Super Cruise is Lane Centering Control, refer to *Lane Keep Assist Description and Operation 7-31* and Adaptive Cruise Control, refer to *Adaptive Cruise Control Description and Operation 7-23* running simultaneously.

The active safety system is a comprehensive feature set designed to help a driver avoid collisions or reduce crash damage while driving, backing, and parking. The K124 Image Processing Module is the primary controller for the active safety system. The active safety control module communicates on multiple serial data busses to share information with various control modules throughout the vehicle. The K124 Image Processing Module uses various sensors and control modules to monitor the vehicle surroundings and take deliberate action to avoid collisions or reduce crash damage. The active safety system tightly integrates the forward collision alert, adaptive cruise control, parking assist, and active emergency braking systems into a single cohesive system.

The K124 Image Processing Module communicates via serial data on CAN 8 with the B174W Front View Camera - Windshield, B233B Forward Range Radar Sensor - Long Range, B233LF Short Range Radar Sensor - Left Front, and the B233RF Short Range Radar Sensor - Right Front to create a virtual fusion image of the area in front of the vehicle. The K124 Image Processing Module observes an actual visual image of the area directly ahead of the vehicle, within 60 m (197 ft), with the B174W Front View Camera - Windshield. The B233B Forward Range Radar Sensor - Long Range is used to measure the distance to objects that are up to 200 m (656 ft) in front the vehicle. The B233LF Short Range Radar Sensor - Left Front and the B233RF Short Range Radar Sensor - Right Front are used to measure the distance to objects that are within 30 m (98 ft) of the front of the vehicle. Within 60 m (197 ft) of the vehicle, all of these inputs are combined to create a fusion image of the area in front of the vehicle. At up to 200 m (656 ft), the B233B Forward Range Radar Sensor - Long Range will detect and begin tracking objects immediately in front of the vehicle. Within 60 m (197 ft), the B174W Front View Camera - Windshield will confirm objects that have been detected by the B233B Forward Range Radar Sensor - Long Range. The B233LF Short Range Radar Sensor - Left Front, and the B233RF Short Range Radar Sensor - Right Front improve cut-in detection of objects that enter the vehicle path from the side and are not necessarily detected by the B174W Front View Camera - Windshield or the B233B Forward Range Radar Sensor - Long Range. The B174W Front View Camera - Windshield and the B233B Forward Range Radar Sensor - Long Range focus on objects directly in front of the vehicle.

The fusion image created by the K124 Image Processing Module is used to detect collision risks and take action based on the immediacy of the risk. When a collision risk exists, the K124 Image Processing Module will alert the driver using the forward collision alert system. This will provide the driver with a visual, audible, or haptic alert that a collision risk has been detected. If the driver does not take action to reduce the risk of collision, such as changing lanes or applying the brakes, the intelligent brake assist system will pre-fill the brake hydraulic system to reduce system response time and increase pressure when quickly applying the brakes. If a collision risk is imminent, the K124 Image Processing Module will enter automatic collision preparation, which will automatically apply the brakes in an effort to mitigate the collision or reduce collision damage.

The K124 Image Processing Module communicates with the steering angle sensor (part of the K43 Power Steering Control Module) and the multi-axis acceleration sensor (part of the K36 Restraints Control Module) on CAN 1. These sensors are used to determine the intended vehicle path. Using the steering data and vehicle acceleration data, the K124 Image Processing Module will determine where the vehicle will be traveling and focus attention on objects in this path. An example would be a driver quickly changing lanes to avoid a collision. This would mitigate the collision risk in the previous lane and the K124 Image Processing Module would quickly transition to tracking objects for any collision risk in the new lane based on intended vehicle path. The K124 Image Processing Module also communicates with the K160 Brake System Control Module to instigate the braking functions of intelligent brake assist and automatic collision preparation.

At the rear of the vehicle, the K124 Image Processing Module uses the B233LR Short Range Radar Sensor - Left Rear, B233RR Short Range Radar Sensor - Right Rear, B233SL Short Range Radar Sensor - Left Rear Side, B233SR Short Range Radar Sensor - Right Rear Side, and the K182 Parking Assist Control Module as part of the backing warning system and the rear automatic braking system. Typical rear parking assist utilizes the K182 Parking Assist Control Module and the four ultrasonic rear parking assist sensors to detect objects when reversing at speed of up to 8 km/h (5 mph). The backing warning systems utilizes both the four ultrasonic rear parking assist sensors, as well as the B233SL Short Range Radar Sensor - Left Rear Side and B233SR Short Range Radar Sensor - Right Rear Side to detect object at speeds above 8 km/h (5 mph). The rear automatic braking system is intended to help avoid or reduce the harm caused by backing crashes or prevent the vehicle from being from being reversed into an object if the vehicle is already stopped.

The Active Safety System analyzes data from the various control modules and sensors listed below:

- K124 Image Processing Module
- B174W Front View Camera - Windshield
- B233B Forward Range Radar Sensor - Long Range
- B233LF Short Range Radar Sensor - Left Front
- B233RF Short Range Radar Sensor - Right Front
- B233LR Short Range Radar Sensor - Left Rear
- B233RR Short Range Radar Sensor - Right Rear
- B233SL Short Range Radar Sensor - Left Rear Side
- B233SR Short Range Radar Sensor - Right Rear Side
- K182 Parking Assist Control Module
- K160 Brake System Control Module

Component Description

K124 Image Processing Module

The K124 Image Processing Module analyzes data from various modules, sensors, and switches to provide enhanced safety features. In addition to providing alerts, the K124 Image Processing Module will provide driver assistance through integrated brake assist, automatic collision preparation, rear emergency braking, and adaptive cruise control. Inputs and outputs can either be connected directly to the K124 Image Processing Module or communicate though serial data. The K124 Image Processing Module communicates on CAN 1, CAN 2, and CAN 8.

Forward collision alert, lane departure warning, and park assist alerts can be user selected to either a haptic signal utilizing the driver's haptic signal motor seat or using beeps through the audio system. This setting can be found in the vehicle personalization menus. See the owner's manual for more detailed information on vehicle personalization.

If there is a DTC set in any of the modules that the K124 Image Processing Module uses as inputs, it will send a "Service Driver Assist" to the instrument cluster to alert the driver of a problem with the system. No other specific details are given unless the driver attempts to activate a specific system. For example if the driver attempts to turn on lane departure warning, the instrument cluster will display "Lane Departure Unavailable" and the indictor will flash and then go out. A scan tool must be used to read the DTCs that are causing the malfunction to help find the problem. Some of the inputs to the K124 Image Processing Module can affect forward facing features, rear facing features, or all features. Systems to check to determine which area to focus are rear park assist for rear features, and lane departure warning and adaptive cruise control for front features. If none of the active safety system features are operative, there may be an issue with another module on the vehicle not providing the proper data to the K124 Image Processing Module. If all K124 Image Processing Module features are inoperative, check the Adaptive Cruise Control Disable History Data, Lane Keep Assist Disable History Data, and Front Impact Mitigation Disable History Data in the scan tool for the reason for the malfunction. Definitions of parameters and suggestions on what to look for can be found in *K124 Image Processing Module: Scan Tool Information (UGN) 2-261* *K124 Image Processing Module: Scan Tool Information (UKL) 2-265*.

- K124 Image Processing Module inputs:
  - B174W Front View Camera - Windshield
  - B233B Forward Range Radar Sensor - Long Range

- B233LF Short Range Radar Sensor - Left Front
- B233RF Short Range Radar Sensor - Right Front
- B233CR Short Range Radar Sensor - Rear Middle
- B233SL Short Range Radar Sensor - Left Rear Side
- B233SR Short Range Radar Sensor - Right Rear Side
- K182 Parking Assist Control Module
- Multi-axis acceleration sensor
- Steering wheel angle sensor
- Wheel speed sensors
- Forward collision alert switch
- Lane departure warning switch
- Parking assist switch

• K124 Image Processing Module outputs:
- K9 Body Control Module
- K160 Brake System Control Module
- K20 Engine Control Module
- P16 Instrument Panel Cluster Control Module
- P29 Head-Up Display
- K40D Driver Seat Adjuster Memory Module
- Lane keep assist switch indicator
- Parking assist switch indicator
- Infotainment system

B174W Front View Camera - Windshield
The B174W Front View Camera - Windshield is located behind the windshield, looking out at the road ahead and detects lane markings and objects directly ahead, within a distance of approximately 60 meters (197 ft). The B174W Front View Camera - Windshield is used for lane keep assist and forward collision alert systems. The B174W Front View Camera - Windshield communicates with the K124 Image Processing Module on CAN 8.

Using information from the B174W Front View Camera - Windshield, the K124 Image Processing Module will provide forward collision alert and lane keep assist to the driver when appropriate. The alerts and warnings can be user-selected to be audible through the audio system or haptic using the active safety seat.

B233B Forward Range Radar Sensor - Long Range
The B233B Forward Range Radar Sensor - Long Range is located behind the front grille emblem and is used in the 30–200 m (98–656 ft) range. The B233B Forward Range Radar Sensor - Long Range communicates with the K124 Image Processing Module on CAN 8. In addition to the wiring harness ground, the module is grounded through the mounting bracket.

B233LF Short Range Radar Sensor - Left Front and B233RF Short Range Radar Sensor - Right Front
The B233LF Short Range Radar Sensor - Left Front and B233RF Short Range Radar Sensor - Right Front are located behind the front fascia that detect objects up to approximately 30 meters (98 ft). The B233LF Short Range Radar Sensor - Left Front and B233RF Short Range Radar Sensor - Right Front communicates with the K124 Image Processing Module on CAN 8.

B233LR Short Range Radar Sensor - Left Rear and B233RR Short Range Radar Sensor - Right Rear
B233LR Short Range Radar Sensor - Left Rear and B233RR Short Range Radar Sensor - Right Rear are located behind the rear fascia and detects objects up to approximately 30 meters (98 ft). The B233LR Short Range Radar Sensor - Left Rear and B233RR Short Range Radar Sensor - Right Rear communicates with the K124 Image Processing Module on CAN 8.

B233SL Short Range Radar Sensor - Left Rear Side and B233SR Short Range Radar Sensor - Right Rear Side
B233SL Short Range Radar Sensor - Left Rear Side and B233SR Short Range Radar Sensor - Right Rear Side are located behind the rear fascia and detects objects up to approximately 30 meters (98 ft). The B233SL Short Range Radar Sensor - Left Rear Side and B233SR Short Range Radar Sensor - Right Rear Side communicates with the K124 Image Processing Module on CAN 8.

K182 Parking Assist Control Module
The K182 Parking Assist Control Module uses ultrasonic object sensors located in the fascias to provide distance measurements to nearby objects. The K182 Parking Assist Control Module communicates with the K124 Image Processing Module on CAN 1.

K160 Brake System Control Module
The K160 Brake System Control Module performs the braking activities of the active safety system. When requested by the K124 Image Processing Module, the K160 Brake System Control Module will prepare or apply the brakes as necessary in response to an imminent collision.

Active Safety System Operation

Forward Collision Alert
The forward collision alert system is a convenience feature of the K124 Image Processing Module, B174W Front View Camera - Windshield, B233B Forward Range Radar Sensor - Long Range, B233LF Short Range Radar Sensor - Left Front, and B233RF Short Range Radar Sensor - Right Front that issues a warning to the driver when a potential collision risk exists. When the system detects a vehicle in the path

ahead, the green vehicle ahead indicator is illuminated on the P16 Instrument Panel Cluster Control Module. If the vehicle ahead is being followed too closely, the vehicle ahead indicator will be amber. When approaching another vehicle too rapidly, the P43 Forward Collision Alert Display (without UV6) or collision alert symbol in the P29 Head-Up Display (with UV6) will flash. An audible alert sound will simultaneously sound or the safety alert seat will provide haptic feedback. The visual alert cannot be changed, but the driver can select between audible or haptic alerts in the vehicle personalization menus. Refer to the vehicle owner manual for more detailed information on vehicle personalization.

Forward collision alert does not provide a warning to help avoid a crash unless it detects a vehicle. Forward collision alert may not detect a vehicle ahead if the B174W Front View Camera - Windshield is blocked by dirt, snow, or ice, or if the windshield is damaged. It may also not detect a vehicle on winding or hilly roads, or in conditions that can limit visibility such as fog, rain, or snow, or if the headlamps or windshield are not cleaned or in proper condition. Keep the windshield, headlamps, and B174W Front View Camera - Windshield area clean and in good repair.

Forward collision alert may provide unnecessary alerts for turning vehicles, vehicles in other lanes, objects that are not vehicles, or shadows. These alerts are normal operation and the vehicle does not need service.

Automatic Emergency Braking

Automatic emergency braking system uses the K124 Image Processing Module, B174W Front View Camera - Windshield, B233B Forward Range Radar Sensor - Long Range, B233LF Short Range Radar Sensor - Left Front, and B233RF Short Range Radar Sensor - Right Front to determine if an imminent collision risk exists. If the brakes have not been applied, the system will automatically apply the brakes in an effort to mitigate the collision or reduce collision damage. The system has a detection range of approximately 60 m (197 ft) and will only function when a vehicle is detected, as indicated by the green vehicle ahead indicator is illuminated on the instrument cluster.

Automatic emergency braking is not a substitute for normal vehicle braking and should not be relied on to brake the vehicle. Automatic emergency braking may not detect a vehicle ahead if the B174W Front View Camera - Windshield is blocked by dirt, snow, or ice, or if the windshield is damaged. It may also not detect a vehicle on winding or hilly roads, or in conditions that can limit visibility such as fog, rain, or snow, or if the headlamps or windshield are not cleaned or in proper condition. Keep the windshield, headlamps, and B174W Front View Camera - Windshield area clean and in good repair.

Front Pedestrian Braking

Front pedestrian braking system uses the K124 Image Processing Module, B174W Front View Camera - Windshield, B233B Forward Range Radar Sensor - Long Range, B233LF Short Range Radar Sensor - Left Front, and B233RF Short Range Radar Sensor - Right Front to determine if an imminent collision risk exists with a nearby pedestrian. If the brakes have not been applied, the system will automatically apply the brakes in an effort to avoid or reduce the harm caused by front-end crashes with nearby pedestrians. The system has a detection range of approximately 40 m (131 ft) and will only function when a pedestrian is detected, as indicated by the amber pedestrian detected indicator illuminated on the instrument cluster.

Front pedestrian braking is not a substitute for normal vehicle braking and should not be relied on to brake the vehicle. Front pedestrian braking may not detect a pedestrian if the B174W Front View Camera - Windshield is blocked by dirt, snow, or ice, or if the windshield is damaged. It may also not detect a pedestrian on winding or hilly roads, or in conditions that can limit visibility such as fog, rain, or snow, or if the headlamps or windshield are not cleaned or in proper condition. Keep the windshield, headlamps, and B174W Front View Camera - Windshield area clean and in good repair.

Backing Warning

The backing warning system utilized the K124 Image Processing Module, B233LR Short Range Radar Sensor - Left Rear, B233RR Short Range Radar Sensor - Right Rear, B233SL Short Range Radar Sensor - Left Rear Side, B233SR Short Range Radar Sensor - Left Rear Side, and the K182 Parking Assist Control Module to warn of rear objects when backing up at speeds greater than 8 km/h (5 mph). Utilizing the ultrasonic rear object sensors, the K182 Parking Assist Control Module can only detect object at seeps up to 8 km/h (5 mph). By utilizing the K124 Image Processing Module and B233CR Short Range Radar Sensor - Rear Middle, along with the K182 Parking Assist Control Module and the rear object sensors, object can be detected at speeds greater than 8 km/h (5 mph).

While reversing at speeds greater than 8 km/h (5 mph), the backing warning system will alert the driver with an audible alert or through haptic feedback from the safety alert seat when an object is first detected. If the system detects a potential collision risk, a series of audible beeps or haptic feedback pulses will be provided, as well as a quick pulse of the brakes.

Reverse Automatic Braking

The rear automatic braking system is designed to help avoid or reduce the harm caused by backing crashes. If the system detects the vehicle is backing too fast to avoid a collision, it may automatically brake hard to a stop.

Utilizing the K124 Image Processing Module, B233LR Short Range Radar Sensor - Left Rear, B233RR Short Range Radar Sensor - Right Rear, B233SL Short Range Radar Sensor - Left Rear Side, B233SR Short Range Radar Sensor - Left Rear Side, and the K182 Parking Assist Control Module, rear automatic braking attempts to avoid imminent collision by automatically braking the vehicle when traveling in reverse. In conjunction with the backing warning system, if the driver does not respond to the audible and haptic alerts while reversing, the system will automatically brake the vehicle to a stop.

Rear automatic braking also prevents the vehicle from backing into an object if the vehicle is stopped and shifted to R. If the system detects an object immediately behind the vehicle while attempting to reverse from a stop, the brakes will be applied.

Pressing the brake pedal after the vehicle comes to a stop will release the rear automatic braking. It may be necessary to release the electronic parking brake. When it is safe to do so, pressing the accelerator pedal firmly at any time will override the rear automatic braking. If rear automatic braking is active and there is no object behind the vehicle, make sure there is no snow, ice, or debris on the rear object sensors.

Lane Keep Assist

The lane keep assist system is a convenience feature that utilizes the B174W Front View Camera - Windshield and K124 Image Processing Module to determine if the vehicle has unintentionally crossed a lane marking and issue a warning. The B174W Front View Camera - Windshield is located behind the windshield, looking out at the road ahead and detecting any lane markings. When the vehicle unintentionally leaves a detected lane, visual and audible or haptic alerts are given to the driver. The visual alert cannot be changed, but the driver can select between audible or haptic alerts in the vehicle personalization menus.

Refer to *Lane Keep Assist Description and Operation 7-31* for more information about the Lane Keep Assist function.

Active Safety System Description and Operation (without UKL)

Front View Camera Module – Windshield

For vehicles that don't have Super Cruise there is no K124 Image Processing Module use on the vehicle. The B174W Front View Camera – Windshield Module controls the Active Safety components in vehicle that don't have Super Cruise. The Adaptive Cruise Control history buffers will be located in the B174W Front View Camera – Windshield Module in the Scan Tool.

The active safety system is a comprehensive feature set designed to help a driver avoid collisions or reduce crash damage while driving, backing, and parking. The B174W Front View Camera - Windshield Module is the primary controller for the active safety system. The image processing module communicates on multiple serial data busses to share information with various control modules throughout the vehicle. The B174W Front View Camera - Windshield Module uses various sensors and control modules to monitor the vehicle surroundings and take deliberate action to avoid collisions or reduce crash damage. The active safety system tightly integrates the forward collision alert, adaptive cruise control, parking assist, and active emergency braking systems into a single cohesive system.

The B174W Front View Camera - Windshield Module communicates via serial data with the B233B Forward Range Radar Sensor - Long Range, B233LF Short Range Radar Sensor - Left Front, and B233RF Short Range Radar Sensor - Right Front to create a virtual fusion image of the area in front of the vehicle. The B174W Front View Camera - Windshield Module observes an actual visual image of the area directly ahead of the vehicle, within 60 m (197 ft), with the B174W Front View Camera - Windshield. The B233B Forward Range Radar Sensor - Long Range is used to measure the distance to objects that are up to 200 m (656 ft) in front the vehicle and the B233LF Short Range Radar Sensor - Left Front, and B233RF Short Range Radar Sensor - Right Front are used to measure the distance to objects that are within 30 m (98 ft) of the front of the vehicle. Within 60 m (197 ft) of the vehicle, all of these inputs are combined to create a fusion image of the area in front of the vehicle. At up to 200 m (656 ft), the B233B Forward Range Radar Sensor - Long Range will detect and begin tracking objects immediately in front of the vehicle. Within 60 m (197 ft), the B174W Front View Camera - Windshield will confirm objects that have been detected by the B233B Forward Range Radar Sensor - Long Range. The B233LF Short Range Radar Sensor - Left Front, and B233RF Short Range Radar Sensor - Right Front improve cut-in detection, which are objects that enter the vehicle path from the side and are not necessarily detected by the B174W Front View Camera - Windshield and B233B Forward Range Radar Sensor - Long Range, who’s focus are those object directly in front of the vehicle.

The fusion image created by the B174W Front View Camera - Windshield Module is used to detect collision risks and take action based on the immediacy of the risk. If a collision risk exists, the B174W Front View Camera - Windshield Module will alert the driver using the forward collision alert system. This will provide the driver with a visual and audible or haptic alert that a collision risk has been detected. If the driver does not take action to reduce the risk of collision, such as changing lanes or applying the brakes, the intelligent brake assist system will pre-fill the brake hydraulic system to reduce system response time and increase pressure when quickly applying the brakes. If a collision risk is imminent, the B174W Front View Camera - Windshield Module will enter automatic collision preparation, which will automatically apply the brakes in an effort to mitigate the collision or reduce collision damage.

The B174W Front View Camera - Windshield Module communicates with the steering angle sensor (part of the K43 Power Steering Control Module) and the multi-axis acceleration sensor (part of the K36 Restraints Control Module) on CAN 1. These sensors are used to determine the intended vehicle path. Using the steering data and vehicle acceleration data, the B174W Front View Camera - Windshield Module will determine where the vehicle will be traveling and focus attention on objects in this path. An example would be a driver quickly changing lanes to avoid a collision. This would mitigate the collision risk in the previous lane and theB174W Front View Camera - Windshield Module would quickly transition to tracking objects for any collision risk in the new lane based on intended vehicle path. B174W Front View Camera - Windshield Module also communicates with the K160 Brake System Control Module to instigate the braking functions of intelligent brake assist and automatic collision preparation.

At the rear of the vehicle, the B174W Front View Camera - Windshield Module uses the B233LR Short Range Radar Sensor - Left Rear, B233RR Short Range Radar Sensor - Right Rear, B233SL Short Range Radar Sensor - Left Rear Side, B233SR Short Range Radar Sensor - Right Rear Side, and the K182 Parking Assist Control Module as part of the backing warning system and the rear automatic braking system. Typical rear parking assist utilizes the K182 Parking Assist Control Module and the four ultrasonic rear parking assist sensors to detect object when reversing at speed of up to 8 km/h (5 mph). The backing warning systems utilizes both the four ultrasonic rear parking assist sensors, as well as the B233SL Short Range Radar Sensor - Left Rear Side and B233SR Short Range Radar Sensor - Right Rear Side to detect object at speeds above 8 km/h (5 mph). The rear automatic braking system is intended to help avoid or reduce the harm caused by backing crashes or prevent the vehicle from being from being reversed into an object if the vehicle is already stopped.

The Active Safety System analyzes data from the various control modules and sensors listed below:

- B174W Front View Camera - Windshield Module
- B233B Forward Range Radar Sensor - Long Range
- B233LF Short Range Radar Sensor - Left Front
- B233RF Short Range Radar Sensor - Right Front
- B233LR Short Range Radar Sensor - Left Rear
- B233RR Short Range Radar Sensor - Right Rear
- B233SL Short Range Radar Sensor - Left Rear Side
- B233SR Short Range Radar Sensor - Right Rear Side
- K182 Parking Assist Control Module
- K160 Brake System Control Module

Component Description

B174W Front View Camera - Windshield Module
The v analyzes data from various modules, sensors, and switches to provide enhanced safety features. In addition to providing alerts, the B174W Front View Camera - Windshield Module will provide driver assistance through integrated brake assist, automatic collision preparation, rear emergency braking, and adaptive cruise control. Inputs and outputs can either be connected directly to the B174W Front View Camera - Windshield Module or communicate though serial data.

Forward collision alert, lane departure warning, and park assist alerts can be user selected to either a haptic signal utilizing the driver’s haptic signal motor seat or using beeps through the audio system. This setting can be found in the vehicle personalization

menus. See the owner's manual for more detailed information on vehicle personalization.

If there is a DTC set in any of the modules that the B174W Front View Camera - Windshield Module uses as inputs, it will send a "Service Driver Assist" to the instrument cluster to alert the driver of a problem with the system. No other specific details are given unless the driver attempts to activate a specific system. For example if the driver attempts to turn on lane departure warning, the instrument cluster will display "Lane Departure Unavailable" and the indictor will flash and then go out. A scan tool must be used to read the DTCs that are causing the malfunction to help find the problem. Some of the inputs to the B174W Front View Camera - Windshield Module can affect forward facing features, rear facing features, or all features. Systems to check to determine which area to focus are rear park assist for rear features, and lane departure warning and adaptive cruise control for front features. If none of the active safety system features are operative, there may be an issue with another module on the vehicle not providing the proper data to the B174W Front View Camera - Windshield Module. If all B174W Front View Camera - Windshield Module features are inoperative, check the Adaptive Cruise Control Disable History Data, Lane Keep Assist Disable History Data, and Front Impact Mitigation Disable History Data in the scan tool for the reason for the malfunction.

- B174W Front View Camera - Windshield Module inputs (when applicable):
  - B174W Front View Camera - Windshield
  - B233B Forward Range Radar Sensor - Long Range
  - B233LF Short Range Radar Sensor - Left Front
  - B233RF Short Range Radar Sensor - Right Front
  - B233CR Short Range Radar Sensor - Rear Middle
  - B233R Short Range Radar Sensor - Rear
  - B233SL Short Range Radar Sensor - Left Rear Side
  - B233SR Short Range Radar Sensor - Right Rear Side
  - K182 Parking Assist Control Module
  - Multi-axis acceleration sensor
  - Steering wheel angle sensor
  - Wheel speed sensors
  - Forward collision alert switch
  - Lane departure warning switch
  - Parking assist switch
- B174W Front View Camera - Windshield Module outputs:
  - K9 Body Control Module
  - K160 Brake System Control Module
  - K16 Battery Energy Control Module
  - K107 Drive Motor Control Module
  - P16 Instrument Panel Cluster Control Module
  - P29 Head-Up Display
  - K40D Driver Seat Adjuster Memory Module
  - Lane keep assist switch indicator
  - Parking assist switch indicator
  - Infotainment system

B174W Front View Camera - Windshield
The B174W Front View Camera - Windshield is located behind the windshield, looking out at the road ahead and detects lane markings and objects directly ahead, within a distance of approximately 60 meters (197 ft). The B174W Front View Camera - Windshield is used for lane keep assist and forward collision alert systems.

B233B Forward Range Radar Sensor - Long Range
The B233B Forward Range Radar Sensor - Long Range is located behind the front grille emblem and is used in the 30–200 m (98–656 ft) range. The B233B Forward Range Radar Sensor - Long Range communicates with the B174W Front View Camera - Windshield Module. In addition to the wiring harness ground, the module is grounded through the mounting bracket.

B233LF Short Range Radar Sensor - Left Front and B233RF Short Range Radar Sensor - Right Front
The B233LF Short Range Radar Sensor - Left Front and B233RF Short Range Radar Sensor - Right Front are located behind the front fascia that detect objects up to approximately 30 meters (98 ft). The B233LF Short Range Radar Sensor - Left Front and B233RF Short Range Radar Sensor - Right Front communicates with the B174W Front View Camera - Windshield Module.

B233R Short Range Radar Sensor - Rear
B233R Short Range Radar Sensor - Rear is located behind the rear fascia and detects objects up to approximately 30 meters (98 ft). The B233R Short Range Radar Sensor - Rear communicates with the B174W Front View Camera - Windshield Module.

B233LR Short Range Radar Sensor - Left Rear and B233RR Short Range Radar Sensor - Right Rear
B233LR Short Range Radar Sensor - Left Rear and B233RR Short Range Radar Sensor - Right Rear are located behind the rear fascia and detects objects up to approximately 30 meters (98 ft). The B233LR Short Range Radar Sensor - Left Rear and B233RR Short

Range Radar Sensor - Right Rear communicates with the B174W Front View Camera - Windshield Module.

B233SL Short Range Radar Sensor - Left Rear Side and B233SR Short Range Radar Sensor - Right Rear Side
B233SL Short Range Radar Sensor - Left Rear Side and B233SR Short Range Radar Sensor - Right Rear Side are located behind the rear fascia and detects objects up to approximately 30 meters (98 ft). The B233SL Short Range Radar Sensor - Left Rear Side and B233SR Short Range Radar Sensor - Right Rear Side communicates with the B174W Front View Camera - Windshield Module.

K182 Parking Assist Control Module
The K182 Parking Assist Control Module uses ultra-sonic object sensors located in the fascias to provide distance measurements to nearby objects. The K182 Parking Assist Control Module communicates with the B174W Front View Camera - Windshield Module.

K160 Brake System Control Module
The K160 Brake System Control Module performs the braking activities of the active safety system. When requested by the B174W Front View Camera – Windshield Module, the K160 Brake System Control Module will prepare or apply the brakes as necessary in response to an imminent collision.

Active Safety System Operation

Forward Collision Alert
The forward collision alert system is a convenience feature of the B174W Front View Camera - Windshield Module, B233B Forward Range Radar Sensor - Long Range, B233LF Short Range Radar Sensor - Left Front, and B233RF Short Range Radar Sensor - Right Front that issues a warning to the driver when a potential collision risk exists. When the system detects a vehicle in the path ahead, the green vehicle ahead indicator is illuminated on the P16 Instrument Panel Cluster Control Module. If the vehicle ahead is being followed too closely, the vehicle ahead indicator will be amber. When approaching another vehicle too rapidly, the P43 Forward Collision Alert Display (without UV6) or collision alert symbol in the P29 Head-Up Display (with UV6) will flash. An audible alert sound will simul-taneously sound or the safety alert seat will provide haptic feedback. The visual alert cannot be changed, but the driver can select between audible or haptic alerts in the vehicle personalization menus. Refer to the vehicle owner manual for more detailed information on vehicle personalization.

Forward collision alert does not provide a warning to help avoid a crash unless it detects a vehicle. Forward collision alert may not detect a vehicle ahead if the B174W Front View Camera - Windshield is blocked by dirt, snow, or ice, or if the windshield is damaged. It may also not detect a vehicle on winding or hilly roads, or in conditions that can limit visibility such as fog, rain, or snow, or if the headlamps or windshield are not cleaned or in proper condition. Keep the windshield, headlamps, and B174W Front View Camera - Windshield area clean and in good repair.

Forward collision alert may provide unnecessary alerts for turning vehicles, vehicles in other lanes, objects that are not vehicles, or shadows. These alerts are normal operation and the vehicle does not need service.

Automatic Emergency Braking
Automatic emergency braking system uses the B174W Front View Camera - Windshield Module, B233B Forward Range Radar Sensor - Long Range, B233LF Short Range Radar Sensor - Left Front, and B233RF Short Range Radar Sensor - Right Front to determine if an imminent collision risk exists. If the brakes have not been applied, the system will automatically apply the brakes in an effort to mitigate the collision or reduce collision damage. The system has a detection range of approximately 60 m (197 ft) and will only function when a vehicle is detected, as indicated by the green vehicle ahead indicator is illuminated on the instrument cluster.

Automatic emergency braking is not a substitute for normal vehicle braking and should not be relied on to brake the vehicle. Automatic emergency braking may not detect a vehicle ahead if the B174W Front View Camera - Windshield is blocked by dirt, snow, or ice, or if the windshield is damaged. It may also not detect a vehicle on winding or hilly roads, or in conditions that can limit visibility such as fog, rain, or snow, or if the headlamps or windshield are not cleaned or in proper condition. Keep the windshield, headlamps, and B174W Front View Camera - Windshield area clean and in good repair.

Front Pedestrian Braking
Front pedestrian braking system uses the B174W Front View Camera - Windshield Module, B233B Forward Range Radar Sensor - Long Range, B233LF Short Range Radar Sensor - Left Front, and B233RF Short Range Radar Sensor - Right Front to determine if an imminent collision risk exists with a nearby pedestrian. If the brakes have not been applied, the system will automatically apply the brakes in an effort to avoid or reduce the harm caused by front-end crashes with nearby pedestrians. The system has a detection range of approximately 40 m (131 ft) and will only function when a pedestrian is detected, as indicated by the amber pedestrian detected indicator illuminated on the instrument cluster.

Front pedestrian braking is not a substitute for normal vehicle braking and should not be relied on to brake the vehicle. Front pedestrian braking may not detect a pedestrian if the B174W Front View Camera - Windshield is blocked by dirt, snow, or ice, or if the windshield is damaged. It may also not detect a pedes-

trian on winding or hilly roads, or in conditions that can limit visibility such as fog, rain, or snow, or if the headlamps or windshield are not cleaned or in proper condition. Keep the windshield, headlamps, and B174W Front View Camera - Windshield area clean and in good repair.

Backing Warning
The backing warning system utilizes the B174W Front View Camera - Windshield Module, B233LR Short Range Radar Sensor - Left Rear, B233RR Short Range Radar Sensor - Right Rear, B233SL Short Range Radar Sensor - Left Rear Side, B233SR Short Range Radar Sensor - Left Rear Side, and the K182 Parking Assist Control Module to warn of rear objects when backing up at speeds greater than 8 km/h (5 mph). If utilizing the ultrasonic rear object sensors alone, the K182 Parking Assist Control Module could only detect an object at speeds up to 8 km/h (5 mph).

While reversing at speeds greater than 8 km/h (5 mph), the backing warning system will alert the driver with an audible alert or through haptic feedback from the safety alert seat when an object is first detected. If the system detects a potential collision risk, a series of audible beeps or haptic feedback pulses will be provided, as well as a quick pulse of the brakes.

Reverse Automatic Braking
The rear automatic braking system is designed to help avoid or reduce the harm caused by backing crashes. If the system detects the vehicle is backing too fast to avoid a collision, it may automatically brake hard to a stop.

Utilizing the B174W Front View Camera - Windshield Module, B233LR Short Range Radar Sensor - Left Rear, B233RR Short Range Radar Sensor - Right Rear, B233SL Short Range Radar Sensor - Left Rear Side, B233SR Short Range Radar Sensor - Left Rear Side, and the K182 Parking Assist Control Module, rear automatic braking attempts to avoid imminent collision by automatically braking the vehicle when traveling in reverse. In conjunction with the backing warning system, if the driver does not respond to the audible and haptic alerts while reversing, the system will automatically brake the vehicle to a stop.

Rear automatic braking also prevents the vehicle from backing into an object if the vehicle is stopped and shifted to R. If the system detects an object immediately behind the vehicle while attempting to reverse from a stop, the brakes will be applied.

Pressing the brake pedal after the vehicle comes to a stop will release the rear automatic braking. It may be necessary to release the electronic parking brake. When it is safe to do so, pressing the accelerator pedal firmly at any time will override the rear automatic braking. If rear automatic braking is active and there is no object behind the vehicle, make sure there is no snow, ice, or debris on the rear object sensors.

Lane Keep Assist
The lane keep assist system is a convenience feature that utilizes the B174W Front View Camera - Windshield Module to determine if the vehicle has unintentionally crossed a lane marking and issue a warning. The B174W Front View Camera - Windshield is located behind the windshield, looking out at the road ahead and detecting any lane markings. When the vehicle unintentionally leaves a detected lane, visual and audible or haptic alerts are given to the driver. The visual alert cannot be changed, but the driver can select between audible or haptic alerts in the vehicle personalization menus.

Refer to *Lane Keep Assist Description and Operation 7-31* for more information about the Lane Keep Assist function.

Adaptive Cruise Control Description and Operation

The Adaptive Cruise Control (ACC) system is an enhanced cruise control system with the ability to sense and react to forward traffic. Compared to the common cruise control system found on many vehicles, the main functional enhancement of the adaptive cruise control system is the ability to detect the presence of a vehicle in the path of the adaptive cruise control vehicle. Adaptive cruise control retains the existing cruise control feature that controls the vehicle speed to the driver selected speed. However, adaptive cruise control allows a driver to set and maintain a following distance to the preceding nearest vehicle in the path ahead. The K124 Image Processing Module controller calculates a follow speed limit to ensure an acceptable distance is maintained to the preceding vehicle in front, should one be present. The adaptive cruise control system automatically adjusts the speed when the vehicle comes up behind a slower travelling vehicle in front. The system applies limited automatic braking and throttle control without driver input when necessary to maintain the set following distance. The preceding vehicle's speed and acceleration along with the active cruise control vehicle speed and acceleration and the distance between the two vehicles are factors used by the K124 Image Processing Module controller to determine the follow speed limit. The vehicle speeds up to the original driver selected set speed when the pathway becomes clear without driver input.

The adaptive cruise control functionality depends on various modules on the vehicle to function and each module performs a function that is critical to the proper operation of the adaptive cruise control system. Adaptive cruise control will not operate if any components fail. Communication between modules is via serial data. The following is a functional description of the K124 Image Processing Module and the other associated components:

- K124 Image Processing Module
- B233B Forward Radar Sensor Module - Long Range
- K9 Body Control Module
- K20 Engine Control Module
- K160 Brake System Control Module
- K71 Transmission Control Module
- P16 Instrument Panel Cluster Control Module
- Cruise Control Switch
- Gap Switch

K124 Image Processing Module

The K124 Image Processing Module analyzes data from various modules, sensors, and switches to provide enhanced safety features. In addition to enhanced safety features, the K124 Image Processing Module provides the adaptive cruise control system functionality. The K124 Image Processing Module analyzes data from the B233B Forward Radar Sensor Module - Long Range to identify and classify objects in the road environment. The system scans the road environment to detect targets within its specified field of view. The K124 Image Processing Module then sends throttle and/or brake commands to the K20 Engine Control Module and K160 Brake System Control Module via serial data in order to control the vehicle acceleration/deceleration based on the data from the modules. The K20 Engine Control Module and K160 Brake System Control Module provide throttle control and automatic braking needed for proper cruise speed adjustment. The following is a list of the K124 Image Processing Module functions pertaining to the adaptive cruise control functionality:

- The K124 Image Processing Module processes the road environment to get data concerning any vehicle ahead of the adaptive cruise control vehicle. Detection, parameter estimation, tracking, object classification and diagnostics are the primary functions. When an object is detected, the controller calculates the object range, range rate, acceleration and azimuth angle parameters.
- The K124 Image Processing Module performs adaptive cruise control state processing automatically – distance control or speed control. The adaptive cruise control operates in two possible states – cruise or follow. The normal operating state is cruise, whereby the vehicle speed is controlled to match the driver selected set speed. When a preceding forward target is identified, the adaptive cruise control system will automatically transition into the follow speed state to provide proper lane spacing behind the target vehicle in front. The preceding vehicle's speed and acceleration, with the adaptive cruise control vehicle speed, acceleration and distance between the two vehicles will be used to determine the adaptive cruise control follow speed limit. The adaptive cruise control follow speed limit will ensure that an acceptable distance is maintained to the preceding vehicle.
- The K124 Image Processing Module determines the follow speed limit for throttle control by the K20 Engine Control Module .
- The K124 Image Processing Module arbitrates the adaptive cruise control system brake and throttle control between the K160 Brake System Control Module and the K20 Engine Control Module .
- The K124 Image Processing Module requests brake light activation during automatic braking.
- The K124 Image Processing Module provides operational feedback to the vehicle driver. The K124 Image Processing Module sends signals for telltales and messages to be displayed on the P16 Instrument Panel Cluster Control Module or driver information center.

B233B Forward Radar Sensor Module - Long Range

The B233B Forward Radar Sensor Module - Long Range is located behind the front fascia and is used in the 30–200 m (98–656 ft) range. The B233B Forward Radar Sensor Module - Long Range communicates with the K124 Image Processing Module via serial data on CAN 8. In addition to the wiring harness ground, the module is grounded through the mounting bracket.

K9 Body Control Module

The following are the adaptive cruise control system functions provided by the K9 Body Control Module:

- The K9 Body Control Module reads all cruise control switches and the gap switch. The K124 Image Processing Module monitors a variety of user operated switches from the K9 Body Control Module switch status information sent via CAN.
- The K9 Body Control Module illuminates the brake light based on a CAN message from the K124 Image Processing Module during automatic braking.
- The K9 Body Control Module measures the brake pedal position and sends brake pedal travel status

via CAN to the K20 Engine Control Module. The K20 Engine Control Module disengages the adaptive cruise control system when the brake is applied by the driver pressing the brake pedal.

K20 Engine Control Module
The following are the adaptive cruise control system functions performed by the K20 Engine Control Module:

- The K20 Engine Control Module provides the electronic throttle control to the adaptive cruise control System. The K20 Engine Control Module is also responsible for determining when a driver is overriding the adaptive cruise control throttle position by pressing the accelerator pedal.
- The K20 Engine Control Module processes the cruise control switch requests received via CAN from the K9 Body Control Module. Engaging and disengaging the adaptive cruise control system are functions performed by the K20 Engine Control Module .
- The K20 Engine Control Module determines the driver selected vehicle speed. Unless the adaptive cruise control module requests a lower vehicle speed, the K20 Engine Control Module will control the vehicle speed to the driver selected set speed.
- The K20 Engine Control Module allows automatic braking without disengaging the adaptive cruise control.

K160 Brake System Control Module
The following are the adaptive cruise control System functions performed by the K160 Brake System Control Module:

- The K160 Brake System Control Module controls the operation of the Antilock Brake System.
- The K160 Brake System Control Module provides automatic braking for the adaptive cruise control system. The K124 Image Processing Module will request vehicle deceleration via high speed GMLAN serial data circuit.
- The K160 Brake System Control Module determines when the driver–applied brake pressure is active. The K160 Brake System Control Module will communicate this status via CAN to the K9 Body Control Module.
- The K160 Brake System Control Module releases vehicle automatic braking when there is a throttle override by the driver pressing the accelerator.
- The K160 Brake System Control Module predicts brake temperatures. Due to automatic braking, the brake system may overheat. When the brakes are overheated, the K160 Brake System Control Module requests the adaptive cruise control System to be temporarily shut down by the K20 Engine Control Module until the brakes cool to a normal operating temperature.

K71 Transmission Control Module
The K71 Transmission Control Module provides a down shift to protect the brakes. When the K71 Transmission Control Module detects some driver braking activity or adaptive cruise control automatic braking activity, the K71 Transmission Control Module down shifts the vehicle transmission to increase engine braking. This helps reduce braking activity, extend brake pad life and reduce brake system overheating.

P16 Instrument Panel Cluster Control Module
The driver information center is a part of the P16 Instrument Panel Cluster Control Module and displays the adaptive cruise control system warning messages. The K124 Image Processing Module requests messages to be displayed on the driver information center by sending a CAN request to the P16 Instrument Panel Cluster Control Module requesting the display of the warning message. When the message is acknowledged by the driver and the cause of the message resolved, the driver information center turns the message off. The adaptive cruise control system will not operate if the driver information center fails.

Cruise Control Switch
The cruise control switch, functionally is a common feature that is shared between the adaptive cruise control system and the regular cruise control system. The adaptive cruise control system will not operate if any cruise switch fails. The cruise control switch comprises the following cruise control function switches:

- On/Off switch
- Set/decrease switch
- Resume/increase switch

The cruise control function switches are arranged in a resistive ladder design whereby each switch function is set up with different resistance values. The K9 Body Control Module through the cruise control switch signal circuit detects a predetermined voltage value when any cruise control switch function is activated. The associated cruise control function signal detected by the K9 Body Control Module is then sent to the K20 Engine Control Module as a CAN message. The K20 Engine Control Module on receiving the message provides the cruise control function requested by the K9 Body Control Module. The K20 Engine Control Module is responsible for recognizing and responding to cruise control switch requests sent by the K9 Body Control Module. The cruise control function switches are used by the K20 Engine Control Module to communicate to the K124 Image Processing Module the driver selected vehicle speed. The driver selected vehicle speed is communicated through GMLAN serial data circuit to the K124 Image Processing Module and the K9 Body Control Module. The adaptive cruise control system engages and adjusts vehicle speeds based on the activation of the following cruise control function switches:

Cruise Control On/Off Switch
The K9 Body Control Module monitors the switch signal circuit in order to determine when the On/Off switch is disabled or activated. The K9 Body Control Module detects a predetermined voltage value on the switch signal circuit. The On/Off switch state is then relayed to the K20 Engine Control Module via CAN. The K20 Engine Control Module sends the On/Off switch input status to the K124 Image Processing Module. When the On/Off switch is turned ON, the adaptive cruise control system enters either a standby enabled or a standby disabled mode. The standby enabled mode indicates that every condition required for the adaptive cruise control system to function has been met, but the adaptive cruise control is not engaged. When the adaptive cruise control is in the standby disabled mode, the conditions necessary for the adaptive cruise control system to function has not been met. When the On/Off switch is turned OFF, the adaptive cruise control will enter the disabled mode. The adaptive cruise control will not activate in the disabled mode.

Cruise Control Set/Decrease Switch
The adaptive cruise control system is engaged when the adaptive cruise control On/Off switch is turned ON and the set/decrease switch is momentarily pressed and released. To engage ACC the vehicle speed must be at or greater than 5km/h (3mph). When the set/decrease switch is pressed, the selected vehicle speed is set to the greater of the current vehicle speed and the minimum set speed of 25km/h (15mph). The selected vehicle speed is displayed by the driver information center. While in the engaged state, the selected vehicle speed and the following distance can be adjusted. Pressing and holding the set/decrease switch, when the adaptive cruise control system is engaged, will decrease the selected vehicle speed without deactivating the adaptive cruise control. Momentarily pressing and releasing the set/decrease switch, when the adaptive cruise control is engaged, decreased the selected vehicle speed by 1.6 km/h (1 MPH) for each time that the set/decrease switch is pressed.

Cruise Control Resume/Increase Switch
The resume/increase switch is used in order to increase the selected vehicle speed when adaptive cruise control is active. The amount selected vehicle speed can be increased from the resume/increase switch depends on how long the switch is pressed. The presence of a slower moving vehicle in the path of the adaptive cruise control vehicle will limit the extent to which the selected vehicle speed can be achieved. If there is no preceding vehicle in front, limiting the adaptive cruise control vehicle acceleration, then the vehicle speed that is attained is the new selected vehicle speed. The current selected vehicle speed is displayed by the driver information center. Acceleration is terminated when the resume/increase switch is released. Momentarily pressing and releasing the resume/increase switch will allow the selected vehicle to accelerate in at 1.6 km/h (1 MPH) increments for each time that the resume/increase switch is momentarily pressed.

Gap Switch
The gap switch allows the driver to determine how closely the adaptive cruise control vehicle follows a target vehicle while adaptive cruise control is engaged. When the adaptive cruise control vehicle speed is being limited due to a slower travelling vehicle, the adaptive cruise control vehicle speed is automatically controlled to the follow speed limit. The gap switch has 3 following distance selections that range from 1–2 s. The gap switch following distance between the adaptive cruise control vehicle and the target vehicle is expressed in time as opposed to actual distance. The distance maintained for a selected gap will vary based on vehicle speed. The faster the vehicle speed, the further back you will follow. The gap setting can only be adjusted when the adaptive cruise control system is engaged. The gap switch is hard-wired to the K9 Body Control Module. Based on voltage variations, the K9 Body Control Module is able to read the gap switch selection and communicates the switch status via CAN to the K124 Image Processing Module. The gap switch is a momentary switch.

The initial push of the gap switch recalls the current setting and activates the display. Subsequent pushes of the gap switch will change the gap setting.

Driver Information Messages

Adaptive Cruise Control Temporarily Unavailable
The K124 Image Processing Module will send this message if the adaptive cruise control has been disengage or disabled. There are many reasons that can cause this, some will also set DTCs. Check vehicle for DTCs and also check the adaptive cruise control enable and disengage scan tool data. Definitions of parameters can be found in K124 Image Processing Module scan tool information.

Service Driver Assist System
This message can be set by either the K124 Image Processing Module if there is a problem with the driver assist system or by the memory seat module if there is a problem with the haptic seat circuits. Check vehicle for DTCs.

Service Adaptive Cruise Control and Service Front Camera
The message is set if the K124 Image Processing Module is not communicating to the P16 Instrument Cluster. Check vehicle for DTCs.

Set Speed
The adaptive cruise control vehicle set speed is displayed at all times in the driver information center when adaptive cruise control is engaged. The K124 Image Processing Module set speed display request is sent to the P16 Instrument Cluster via the GMLAN serial data circuit.

Follow Distance
The driver information center displays the driver selected following distance when adaptive cruise control is engaged and the gap switch is active. The current follow distance setting is displayed in the driver information center for a few seconds after the gap switch is pressed to increase or decrease the following distance. The K124 Image Processing Module follow distance display request is sent to the P16 Instrument Cluster via the GMLAN serial data circuit.

Vehicle Ahead Indicator
The vehicle ahead indicator is displayed in the P16 Instrument Cluster hen the radar identifies an in-path vehicle. The vehicle ahead indicator is a warning to the driver that a vehicle is ahead. The indicator also serves as a feedback to the driver that the radar is functioning properly. The K124 Image Processing Module commands the display of the vehicle ahead indicator via a GMLAN serial data message to the P16 Instrument Cluster. The vehicle ahead indicator only displays with the adaptive cruise control active and may sometimes display for stationary road objects.

Adaptive Cruise Control Operation

Adaptive cruise control uses the K124 Image Processing Module and B233B Forward Radar Sensor Module - Long Range, which looks directly ahead to monitor vehicles that a driver is following. Adaptive cruise control helps drivers follow a vehicle ahead at the following gap they select — Far, Medium or Near — while they steer. This reduces the driver's need to frequently brake and accelerate.

If the system does not detect a vehicle ahead, adaptive cruise control will resort to traditional cruise control operation. When the system detects a vehicle ahead in the driving lane, the vehicle ahead icon will appear in green on the P16 Instrument Panel Cluster Control Module. When the vehicle detected ahead is within the selected following gap setting, adaptive cruise control can automatically slow the vehicle down and adjust vehicle speed to follow the vehicle ahead at the selected following gap. Like regular cruise control, adaptive cruise control uses ON/OFF, CANCEL, SET and RESUME buttons on the steering wheel.

Getting started:

- To turn adaptive cruise control on, the driver should press the cruise control ON/OFF button.
- When the system is turned on, the driver information center in the P16 Instrument Panel Cluster Control Module will show a white adaptive cruise control icon.
- To choose a cruise speed, the driver should press the SET button while driving at the desired speed. The white adaptive cruise control icon will change to green, indicating that adaptive cruise control is engaged.
- The adaptive cruise control gap switch on the steering wheel lets drivers select a Far, Medium or Near following gap between their vehicle and the vehicle ahead. Both adaptive cruise control i and forward collision alert are set at the same setting.

Adaptive cruise control can follow a vehicle ahead to a stop. When the vehicle ahead starts moving again, the driver should check that it is safe to proceed, then continue to automatically follow the vehicle ahead by pressing the accelerator or resume button. If the driver doesn't respond soon after the stop, the vehicle ahead icon will flash. In addition, an audible notification will sound, or if equipped, the safety alert seat will pulse to remind the driver to check traffic ahead before proceeding.

If the adaptive cruise control is controlling speed and detects that the vehicle is approaching a vehicle ahead too quickly and adaptive cruise control cannot apply sufficient braking, such as when vehicles ahead suddenly slow or stop, drivers will receive a forward collision alert to warn them to quickly take action. This alert includes a red flashing visual alert, an audible notification, or, if equipped, the safety alert seat will pulse.

If the driver uses the accelerator pedal while adaptive cruise control is active, a driver information center warning message will indicate that automatic braking will not occur. In some vehicles, instead of the message, the green adaptive cruise control icon will change to blue.

Switching between cruise control modes (if available):

- The driver should press and hold the cruise control CANCEL button.
- The driver will see either the adaptive cruise control icon or the regular cruise control icon on the driver information center. This icon indicates which cruise control mode has been selected.
- Drivers should check which cruise control icon is displayed before setting their cruise control speed.

The driver can end adaptive cruise control by doing any of the following:

- Stepping lightly on the brake pedal
- Pressing the cruise control CANCEL button
- Pressing the cruise control ON/OFF button

Set At Standstill

On properly equipped 2024+ model year vehicles, you can also set an Adaptive Cruise Control speed while your vehicle is stopped. You can only do this when the system is on, the brake pedal is applied and your vehicle is in a Forward gear

If equipped with the Set at Standstill feature, when the vehicle is stopped in traffic, press the Set button while your foot is on the brake to engage Adaptive Cruise Control. You can then manipulate the set speed, with a foot still on the brake, by touching the Resume/+ or Set/- button repeatedly until the system shows the desired speed. You can then lift your foot off the brake, and the vehicle will hold its position

Once traffic moves, push the Resume button or tap the accelerator pedal, and your vehicle will automatically accelerate to the set speed or following gap time if a vehicle is detected ahead.

Adaptive Cruise Control Operational Checks

Safety Considerations

- The system can only apply limited braking. The driver’s complete attention is always required while driving
- The system may not react to parked, stopped or slow-moving vehicles; the driver should always be ready to take action and apply the brakes
- Driver should not use adaptive cruise control on winding or hilly roads, on freeway exit or entrance ramps or when trailering. In these driving conditions, the system may not detect the vehicle ahead
- The system cannot detect traffic lights or traffic signs, so the driver needs to safely brake accordingly whenever approaching an intersection with a traffic light or stop sign
- If no vehicle ahead is detected, adaptive cruise control will work like regular cruise control
- When using adaptive cruise control, the driver should keep in mind that the system is designed to follow detected vehicles ahead at a longer distance when traveling at higher speeds than at lower speeds
- To avoid using adaptive cruise control by accident, advise customers to keep the cruise control button off when they don’t need it. They should press the ON/OFF button and verify that the adaptive cruise control icon is not lit

Adaptive cruise control may have difficulty detecting the following objects:

- Vehicles in front of the driver’s vehicle that have a rear aspect that is low, small or irregular
- A truck or trailer that has no cargo in the cargo bed
- Vehicles with cargo extending from the back end
- Non-standard shaped vehicles, such as vehicle transport, vehicles with a sidecar or horse carriages
- Vehicles that are low to the road surface
- Objects that are close to the front of the driver’s vehicle

Weather conditions can affect adaptive cruise control:

- If the vehicle’s interior temperature is extremely high, the P16 Instrument Panel Cluster Control Module may indicate that adaptive cruise control is temporarily unavailable. This can be caused by extreme hot weather conditions. Adaptive cruise control will return to normal operation once the ambient is cooler

- Conditions that are associated with low visibility, such as rain, snow or road spray, may limit the performance of adaptive cruise control.

Forward Collision Alert Description and Operation (without UGN)

Forward Collision Alert (UEU)

The forward collision alert system is a convenience feature of the B174W Front View Camera - Windshield that can warn drivers of a possible front-end collision situation with a vehicle they are following. The B174W Front View Camera - Windshield is located behind the windshield, looking out at the road ahead and detecting vehicles directly ahead. When a vehicle is detected ahead, a green icon is displayed. This indicator will turn amber if the driver is following too closely. If the system detects that the driver is seconds away from a possible front-end collision, it sends an alert. The P43 Forward Collision Alert Display, which includes a series of red collision alert LEDs, will flash. An audible alert sound will simultaneously sound. If the vehicle is equipped with safety alert seat (HS1), both sides of the seat will pulse. The forward collision alert system can be set to "far," "medium," or "near" timing using the forward collision alert switch and can be turned off using this control or through the vehicle personalization.

Forward collision alert does not provide a warning to help avoid a crash unless it detects a vehicle. Forward collision alert may not detect a vehicle ahead if the B174W Front View Camera - Windshield is blocked by dirt, snow, or ice, or if the windshield is damaged. It may also not detect a vehicle on winding or hilly roads, or in conditions that can limit visibility such as fog, rain, or snow, or if the headlamps or windshield are not cleaned or in proper condition. Keep the windshield, headlamps, and B174W Front View Camera - Windshield area clean and in good repair.

Forward collision alert may provide unnecessary alerts for turning vehicles, vehicles in other lanes, objects that are not vehicles, or shadows. These alerts are normal operation and the vehicle does not need service.

Forward Automatic Braking (UHY)

Forward automatic braking detects vehicles ahead in your path that are traveling in the same direction and may help reduce crash severity or avoid the crash altogether by applying the brakes automatically or enhancing the driver's braking in some emergency front-end collision situations . It can provide braking assist, such as brake system pre-fill, or automatically brake the vehicle if an imminent collision is determined. This can help avoid or lessen the severity of crashes when driving in a forward gear. Depending on the situation, the vehicle may automatically brake moderately or hard. Forward automatic braking can only occur if a vehicle is detected. When a vehicle is detected ahead, a green icon is displayed. The forward automatic braking system works when driving in a forward gear between 8 km/h (5 mph) and 60 km/h (37 mph). It can detect vehicles up to approximately 60 m (197 ft) away.

If the system detects that the driver is seconds away from a possible front-end collision with the vehicle it is following, it will first send an alert. If the driver doesn't respond quickly or the situation happens suddenly, forward automatic braking enhances the driver's braking or automatically applies the brakes. Drivers can override automatic braking at any time by pressing the accelerator or by braking. If the system slows a vehicle to a complete stop, the electronic parking brake will apply. The electronic parking brake can be release in typical fashion by pressing the electronic parking brake switch.

Through vehicle personalization, the forward automatic braking can be been set to the ALERT setting or turned completely off. This setting disables most automatic braking functions. The driver information center will display FORWARD COLLISION SYSTEM REDUCED or AUTOMATIC COLLISION PREP REDUCED. This is normal operation when the forward automatic braking or forward collision alert system is set to OFF or ALERT. This message is not present when the forward automatic braking or forward collision alert system are set to ALERT and BRAKE.

Forward Collision Alert/Forward Automatic Braking Components

- B174W Front View Camera - Windshield
- P16 Instrument Panel Cluster Control Module
- P43 Forward Collision Alert Display (without UV6)
- P29 Head-Up Display (with UV6)
- Forward Collision Alert Switch
- Infotainment System
- Safety Alert Seat (with HS1)

B174W Front View Camera - Windshield

The B174W Front View Camera - Windshield detects vehicles in front of the vehicle. The B174W Front View Camera - Windshield communicates with the P16 Instrument Cluster via serial data to illuminate the appropriate amber or green vehicle ahead indicator or P43 Forward Collision Alert Display. The B174W Front View Camera - Windshield also communicates via serial data with the infotainment system to request audible alerts.

P16 Instrument Panel Cluster Control Module

The P16 Instrument Panel Cluster Control Module communicates via serial data with the B174W Front View Camera - Windshield and will illuminate the amber or green vehicle ahead indicator as requested by the B174W Front View Camera - Windshield. The P16

Instrument Panel Cluster Control Module also controls the P43 Forward Collision Alert Display.

P43 Forward Collision Alert Display (without UV6)
The P43 Forward Collision Alert Display are a series of red LEDs that will flash when approaching another vehicle too rapidly. The P43 Forward Collision Alert Display are located in the upper instrument panel area and reflect off the windshield when illuminated.

The P43 Forward Collision Alert Display receive power and ground and are discretely controlled by the P16 Instrument Cluster through a pair of low control circuits. When requested by the B174W Front View Camera - Windshield, the P16 Instrument Cluster will pulse the low control circuits, flashing the LEDs as a visual alert that another vehicle is being approached too rapidly.

P29 Head-Up Display (with UV6)
The P16 Instrument Cluster controls the P29 Head-Up Display via serial data. The P16 Instrument Cluster will command the P29 Head-Up Display to flash the collision alert indicator as a visual alert when approaching another vehicle too rapidly as requested by the B174W Front View Camera - Windshield.

Forward Collision Alert Switch
The forward collision alert switch provides an input to the B174W Front View Camera - Windshield to select the alert timing sensitivity when approaching another vehicle too rapidly. The forward collision alert switch is part of the S70L Cruise Control Switch and provides inputs to the K9 Body Control Module, which then communicates with the B174W Front View Camera - Windshield via serial data.

The K9 Body Control Module applies voltage and monitors a low signal voltage from the normally open switch. When the switch is pressed, the signal circuit is pulled low through a specific series of resistors, indicating that the system has been requested to change the alert timing sensitivity. The first button press will show the current alert timing setting on the driver information center. With every subsequent button press, the alert timing sensitivity is changed.

Infotainment System
The infotainment system controls the audible alerts for the forward collision alert system. If the vehicle is approaching another vehicle too rapidly, the B174W Front View Camera - Windshield will command the infotainment system issue an audible alert to the driver.

Safety Alert Seat (with HS1)
The K9 Body Control Module (without A45) or K40D Driver Seat Adjuster Memory Module (with A45) controls the haptic alert provided by the seats. If the vehicle is approaching another vehicle too quickly, the B174W Front View Camera - Windshield will command the control module to pulse both sides of the seat.

Forward Collision Alert and Forward Automatic Braking Operational Checks

If the forward collision alert system is off, inoperative, or not functioning, check the following:

- Verify there are no active driver information center messages and that no DTCs are set.
- Verify that the system is enabled through vehicle personalization. Vehicle personalization allows the system to be set to “Off,” “Beeps,” ”Alert,” “Safety Alert Seat,” or “Alert & Brake”.
- Attempt to replicate the customer concern. While driving, if the vehicle-ahead telltale display illuminates green when following a vehicle above 8 km/h (5 mph) , forward collision alert is operating properly.

If the driver is receiving false forward collision alerts, check the following:

- Verify the B174W Front View Camera - Windshield is not blocked by dirt, snow, or ice, and the windshield is not damaged.
- The system may be identifying vehicles farther ahead than the customer is expecting. Forward collision alert detects vehicles within a distance of approximately 60 m (197 ft) and operates at speeds above 8 km/h (5 mph).
- Forward collision alert may provide unnecessary alerts to turning vehicles, vehicles in other lanes, objects that are not vehicles, or shadows. These alerts are normal operation and the vehicle does not need service.

If forward collision alert beeps, but the seat does not vibrate, check the following:

- Verify the vehicle is equipped with safety alert seat (RPO HS1).
- Verify there are no active driver information center messages and that no DTCs are set.
- Verify that the system is enabled through vehicle personalization: It may be set to “Beeps” or “Alert Only” instead of “Safety Alert Seat” or “Alert & Brake”.

If FORWARD COLLISION SYSTEM REDUCED or AUTOMATIC COLLISION PRE REDUCED is displayed on the driver information center, check the following:

- Verify that the system is enabled through vehicle personalization: It may be set to “Alert Only” instead of ”Off” or Alert & Brake”.

If SERVICE FRONT CAMERA is displayed on the driver information center, check the following:

- Verify there are no active driver information center messages and that no DTCs are set.

- If the message is only displayed upon startup, check the following:
  - Verify the B174W Front View Camera - Windshield is not blocked by dirt, snow, or ice, and the windshield is not damaged.
  - Verify the vehicle is not parked closed to a wall or the B174W Front View Camera - Windshield is not in an over-temperature condition, such as sitting for long periods in high ambient temperatures and direct sun.
- If the message is displayed beyond startup, check the following:
  - Verify there are no active driver information center messages and that no DTCs are set.

If FRONT CAMERA IS BLOCKED is displayed on the driver information center, check the following:

- Check for any other driver information center service messages.
- Verify the B174W Front View Camera - Windshield is not blocked by dirt, snow, or ice, and the windshield is not damaged.

If SERVICE DRIVER ASSIST is displayed on the driver information center, check the following:

- Check for any other driver information center service messages.
- Verify there are no active driver information center messages and that no DTCs are set.

Forward Collision Alert Description and Operation (with UGN)

On vehicles equipped with RPO UGN, forward collision alert is an integrated of the active safety system. Refer to *Active Safety System Description and Operation (with UKL) 7-15* *Active Safety System Description and Operation (without UKL) 7-19*.

Lane Keep Assist Description and Operation

The lane keep assist system is a convenience feature that utilizes the B174W Front View Camera - Windshield maintains the vehicle location between identified lane markings. The B174W Front View Camera - Windshield is located behind the windshield, looking out at the road ahead and detecting any lane markings. If the vehicle begins to approach an identified lane marking, automatic correction will be applied by the electric power steering to move the vehicle back toward the center the lane. An integrated function of lane keep assist is lane departure warning. When the vehicle unintentionally leaves a detected lane, visual and audible or haptic (if equipped) alerts are given to the driver. The visual alert cannot be changed, but the driver can select between audible or haptic alerts in the vehicle personalization menus.

Lane Keep Assist System Components

The lane keep assist system is made up of the following components:

- B174W Front View Camera - Windshield
- P16 Instrument Panel Cluster Control Module
- Multi-axis acceleration sensor (part of the K36 Restraints Control Module)
- Steering wheel angle sensor (part of the K43 Power Steering Control Module)
- K43 Power Steering Control Module
- Lane keep assist switch
- Infotainment system
- Safety alert seat (with HS1)

B174W Front View Camera - Windshield

The B174W Front View Camera - Windshield detects visual queues such as lane markings. When it is determined that the vehicle is approach an identified lane marking, automatic correction will be applied by the electric power steering to move the vehicle back toward the center the lane. Using the multi-axis acceleration sensor and steering wheel angle sensor, the B174W Front View Camera - Windshield determines the vehicles path and compares this to it's own intended path based on lane markings. The B174W Front View Camera - Windshield will then request the K43 Power Steering Control Module to perform the appropriate steering correction. The B174W Front View Camera - Windshield receives an input via serial data from the lane keep assist switch and controls the lane keep assist switch indicator output.

P16 Instrument Panel Cluster Control Module

The P16 Instrument Panel Cluster Control Module contains green and amber lane keep assist indicators. These indicate to the driver the current status of the lane keep assist system and are controlled via serial data by the B174W Front View Camera - Windshield. When the vehicle speed is above the minimum required speed (refer to owner manual) and the system has detected the required lane markings and is ready to assist, the green indicator will be illuminated on the P16 Instrument Panel Cluster Control Module. If the vehicle has unintentionally left the lane, the amber indicator will flash.

Multi-axis Acceleration Sensor

The steering intervention is based on the forward looking sensor outputs, such as lateral offset of the vehicle, relative yaw angle and time to line crossing. Over that, other vehicle dynamics signals are needed, e.g. velocity, steering angle, yaw rate for the purpose of a driver suppression. The multi-axis acceleration sensor measures vehicle dynamics signals such as velocity and yaw rate for the purpose of determining the

vehicles path. The multi-axis acceleration sensor is an integrated part of the K36 Restraints Control Module.

Steering Wheel Angle Sensor
The steering intervention is based on the forward looking sensor outputs, such as lateral offset of the vehicle, relative yaw angle and time to line crossing. Over that, other vehicle dynamics signals are needed, e.g. velocity, steering angle, yaw rate for the purpose of a driver suppression. The steering wheel angle sensor measures vehicle dynamics signals such as steering angle for the purpose of determining the vehicles path. The steering wheel angle sensor is an integrated part of the steering gear and K43 Power Steering Control Module.

K43 Power Steering Control Module
The K43 Power Steering Control Module uses a torque sensor to detect driver inputs and relays that information to the B174W Front View Camera - Windshield. The electric power steering is used to maintain lane centering.

Lane Keep Assist Switch
The lane keep assist switch provides an input to the B174W Front View Camera - Windshield via serial data to turn the lane keep assist system on and off. The B174W Front View Camera - Windshield provides a signal voltage to the normally open momentary switch. When the switch is pressed, the signal circuit is pulled to ground, indicating to the B174W Front View Camera - Windshield that the system has been requested to turn ON or OFF. The lane keep assist switch also contains the lane keep assist switch indicator, which is controlled by the B174W Front View Camera - Windshield to indicate the ON and OFF status of the lane keep assist system. When the system has been enabled by the lane keep assist switch, the B174W Front View Camera - Windshield applies ground to the switch indicator via serial data and illuminates the LED. The location of the lane keep assist switch can vary with different vehicles. For the exact location please refer to the vehicle owner's manual.

Infotainment system
The radio controls the audible alert for the lane keep assist. If the vehicle has unintentionally left the lane, the radio will command three beeps as an audible alert to the driver.

Safety Alert Seat (with HS1)
The K9 Body Control Module (without A45) or K40D Driver Seat Adjuster Memory Module (with A45) controls the haptic alert provided by the seats. If the vehicle has unintentionally left the lane and the K43 Power Steering Control Module determines the corrective action requires an above threshold amount of effort, three pulses to the left or right side of the seat will be commanded, depending on the lane departure direction.

Lane Keep Assist Operation

Lane keep assist with lane departure warning provides gentle steering wheel input and alerts to help prevent drivers from unintentionally drifting out of their intended lane.

There is two stages of warning/intervention for the driver: The first stage is the steering push back, if the lane keep assist system detects that the vehicle will cross the lane marking despite it is intervening, a second stage warning shall be issued. The second stage warning is a chime or a haptic alert through the safety alert seat (if equipped). If a haptic seat vibration is used as stage 2 warning, the vibration will occur on the side of the seat, where the lane departure occurred.

System operation can be described by the following modes:

- Off State: The system has been turned off by the driver using the lane keep assist switch. The lane keep assist indicator will not be illuminated.
- Not Ready To Assist: The system is enabled and the lane keep assist indicator is illuminated, but not ready to assist when any of the following conditions is true:
  - Vehicle speed is less than required for lane keep assist operation. Refer to Owner's Manual for operational speed.
  - The system cannot detect lane markings. This may be because there are no lane markings, as on a country road or that the lane markings cannot be determined due to snow, rain, or other driving conditions.
  - The windshield area in front of the camera or the camera lens is blocked by fog, dirt, damage to the windshield or other elements that may prevent the camera from detecting lane markings.
- Ready To Assist: The system is enabled and ready to warn of the unintentional lane crossing. The system is ready to assist when the green lane keep assist indicator is illuminated on the P16 Instrument Cluster.

Lane Crossing Alerts
- When one of the following conditions are met, the system will not give alerts:
  - The correct turn signal is activated. An activated turn signal is interpreted as an intentional lane crossing.
  - The operator makes an intentional steering maneuver.
  - The operator makes an intentional accelerating maneuver.

- The operator makes an intentional braking maneuver.
- Lane crossing alert consists of the following:
  - The amber lane keep assist indicator will flash.
  - “push-back” steering torque input (or nudge) from electric power steering to help prevent a lane departure
  - Three chimes are activated through the radio or three pulses to the left or right side of the active safety seat (if equipped).

Safety Alert Seat Description and Operation

The safety alert seat uses pulsing driver seat vibrations to intuitively communicate the direction of a possible crash threat. Two P45 Front Seat Lane Departure Warning Actuators are utilized to create the vibration and are located on the left and right sides of the seat cushion. Utilizing two motors allows the vibration to be localized to the left or right side of the seat, depending on the side of the vehicle generating the alert, or to vibrate both simultaneously.

Note: The following systems may not be available on all vehicles.

The following systems utilize the safety alert seat:

- Lane Departure Warning and Lane Keep Assist – Utilizes left or right-side pulses to alert drivers if they unintentionally drift out of their lane
- Rear Cross Traffic Alert – Utilizes left or right-side pulses to the direction of an approaching vehicle
- Forward Collision Alert – Simultaneously pulses on both sides to warn drivers of a possible collision with the vehicle that they’re following
- Front Pedestrian Braking – Simultaneously pulses on both sides to warn drivers of a possible collision with a pedestrian
- Front Parking Assist, Rear Parking Assist, and Backing Warning (part of the Rear Automatic Braking system) – Simultaneously pulses on both sides to warn drivers of a possible low-speed collision

Safety Alert Seat Components

The active safety seat utilizes the following components:

- K9 Body Control Module (without A45)
- K40D Driver Seat Adjuster Memory Module (with A45)
- P45LR Front Seat Lane Departure Warning Actuator - Left Rear
- P45RR Front Seat Lane Departure Warning Actuator - Right Rear

K9 Body Control Module (without A45)
The K9 Body Control Module receives serial data messages from other modules and provides voltage to control the P45 Front Seat Lane Departure Warning Actuators. The K9 Body Control Module will pulse the left, right, or both P45 Front Seat Lane Departure Warning Actuators with the number of pulses requested over serial data. The K9 Body Control Module monitors the control circuits for open, short to ground, and short to voltage conditions and will set DTCs if a circuit fault is detected.

K40D Driver Seat Adjuster Memory Module (with A45)
The K40D Driver Seat Adjuster Memory Module receives serial data messages from other modules and provides voltage to control the P45 Front Seat Lane Departure Warning Actuators. The K40D Driver Seat Adjuster Memory Module will pulse the left, right, or both P45 Front Seat Lane Departure Warning Actuators with the number of pulses requested over serial data. The K40D Driver Seat Adjuster Memory Module monitors the control circuits for open, short to ground, and short to voltage conditions and will set DTCs if a circuit fault is detected.

P45 Front Seat Lane Departure Warning Actuator
The P45 Front Seat Lane Departure Warning Actuator is DC motor located in the driver’s seat bottom cushion. Two P45 Front Seat Lane Departure Warning Actuators are used in the seat bottom cushion, positioned on the left and right side. An offset weight is attached to the motor. When activated, the spinning offset weight creates a vibration felt by the driver through the seat cushion.

Each P45 Front Seat Lane Departure Warning Actuator receives a constant chassis ground. The motor is controlled by the K9 Body Control Module (without A45) or K40D Driver Seat Adjuster Memory Module (with A45) by providing voltage through a dedicated control circuit. When an alert is required, the control module will apply voltage, activating the P45 Front Seat Lane Departure Warning Actuator

Side Blind Zone Alert Description and Operation

The side blind zone alert system detects and reports “objects of interest" on either side of the vehicle, within a specified “blind spot” zone. The system is designed to alert the driver, with a visual display placed on the side view mirror, to the presence of objects of interest that may not be visible in the inside rearview mirror and outside rear view mirrors. Although this system is intended to help drivers avoid lane change collisions, it does not replace driver vision and therefore should be considered a lane change aid. Even with the side blind zone alert system, the driver must check carefully for objects outside of the reporting zone (e.g., a fast approaching vehicle) before changing lanes. In the event that the system senses a malfunction through its diagnostic routines, the system will be disabled and the driver will be visually notified.

When the system detects a vehicle in the side blind zone while driving forward, an amber warning symbol will light up in the appropriate outside mirror. This indicates that it may be unsafe to change lanes. If the driver then activates the turn signal, the amber warning symbol starts flashing as an extra warning not to change lanes.

Side blind zone alert is active when the vehicle is out of park, or the parking brake is off on manual transmission vehicles, and at any speed up to approximately 140 km/h (87 MPH). If a vehicle is detected in the blind zone, the warning symbols will illuminate on the appropriate side. When the vehicle is started, both outside mirror indicators will briefly illuminate to indicate that the system is operating. The warning symbols will vary brightness based on the ambient light conditions.

Side Blind Zone Alert Components

- B218L Side Obstacle Detection Control Module - Left
- B218R Side Obstacle Detection Control Module - Right
- K9 Body Control Module
- S79D Front Side Door Window Control Switch - Driver
- S79P Front Side Door Window Switch - Passenger
- A9A Outside Rearview Mirror – Driver
- A9B Outside Rearview Mirror – Passenger
- Safety Alert Seat (HS1)

B218 Side Obstacle Detection Control Module
The B218L Side Obstacle Detection Control Module - Left and B218R Side Obstacle Detection Control Module - Right are located on each side of the vehicle behind the rear fascia and are not directly visible from outside the vehicle. The B218 Side Obstacle Detection Control Modules use radar to determine the presence of objects nearby. Both B218 Side Obstacle Detection Control Modules communicates with the vehicle via serial data. The B218L Side Obstacle Detection Control Module - Left and B218R Side Obstacle Detection Control Module - Right also communicate with one another on a private CAN serial data bus. When an object is detected in the side blind zone, the B218L Side Obstacle Detection Control Module - Left and B218R Side Obstacle Detection Control Module - Right will send a CAN message to the K9 Body Control Module to illuminate the appropriate side blind zone alert indicator. Vehicles equipped with Super Cruise (UKL) use the short range radar rear for object detection.

K9 Body Control Module
The B218L Side Obstacle Detection Control Module - Left and the B218R Side Obstacle Detection Control Module - Right will send a CAN message to the K9 Body Control Module when requesting the driver or passenger indicator be illuminated. The K9 Body Control Module then sends a LIN message to the S79D Front Side Door Window Control Switch - Driver or S79P Front Side Door Window Switch - Passenger with the indicator request.

S79 Front Side Door Window Control Switch
The B218L Side Obstacle Detection Control Module – Left and the B218R Side Obstacle Detection Control Module – Right will send a CAN message to the K9 Body Control Module when requesting the driver or passenger indicator be illuminated. The K9 Body Control Module then sends a LIN message to the S79D Front Side Door Window Control Switch - Driver or S79P Front Side Door Window Switch - Passenger with the indicator request. The S79D Front Side Door Window Control Switch - Driver or S79P Front Side Door Window Switch - Passenger will apply voltage to the indicator control circuit to illuminate the appropriate indicator.

A9 Outside Rearview Mirror
The A9A Outside Rearview Mirror – Driver and A9B Outside Rearview Mirror – Passenger each contain an icon that is backlit with high intensity, amber-colored LED’s located on the mirror surface. The display brightness adapts to day/night conditions. The P43D Side Object Detection Indicator – Driver and P43P Side Object Detection Indicator – Passenger in the appropriate A9 Outside Rearview Mirror is illuminated if the specific B218 Side Obstacle Detection Control Module detects a vehicle in the side blind zone to inform the driver that there is a vehicle driving in the blind spot zone.

Safety Alert Seat (HS1)
The K40 Seat Memory Control Module (with A45) or K9 Body Control Module (without A45) controls the P45 Front Seat Lane Departure Warning Actuators. The

P45 Front Seat Lane Departure Warning Actuators provide haptic alert to the driver. If an object is detected, the system will command pulses to the P45LR Seat Haptic Movement Motor – Driver Left Rear or P45RR Seat Haptic Movement Motor – Driver Right Rear, depending on the location of the object, as an alert to the driver.

Side Blind Zone Alert Operation

When the vehicle is started, both A9 Outside Rearview Mirror indicators will briefly illuminate to indicate that the system is operating. The system is designed to detect objects of interest as small as a 125cc motorcycle with rider. The detection zone starts at the outside rearview mirror and extends out to 3.5 m (11 ft) at the back corner of the vehicle and 3 m (10 ft) behind the vehicle at a height of 0.5 m (1.5 ft) and 2.0 m (6 ft) above the ground. The system may illuminate an indicator due to guardrails, signs, trees, shrubs, and other non-moving objects. This is normal system operation; the vehicle does not need service.

When the system detects a vehicle in the side blind zone or lane change alert area while driving forward, independent if passing a vehicle or being passed, an amber warning symbol will illuminate in the appropriate A9 Outside Rearview Mirror. This indicates that it may be unsafe to change lanes. If the driver then activates the turn signal, the amber warning symbol starts flashing as an extra warning not to change lanes.

Foul weather may affect the operation of the side blind zone and lane change alert systems. Occasional missed alerts can occur under normal circumstances and will increase in wet conditions. The number of missed alerts will increase with increased rainfall or road spray. Heavy rainfall, as well as mud, dirt, snow, ice, or slush build-up on the rear fascia, can completely disable the system.

If the vehicle is towing a trailer or has an object such as a bicycle rack attached to the rear of the vehicle, the side blind zone and lane change alert systems may not function properly and the indicators may illuminate intermittently or remain illuminated all the time.

Side blind zone may not alert the driver to vehicles rapidly overtaking the vehicle from the rear or if the vehicle is overtaking another vehicle, with a speed difference of more than 8 mph.

If the vehicle is traveling in an open area where another vehicle cannot be detected within 2 minutes, the side object detection may become unavailable and it may take 3-4 hours of driving to establish normal system function.

Lane Change Alert Operation

An integrated function of the side blind zone alert system is lane change alert. Lane change alert supplements the side blind zone alert system by detecting approaching vehicles on either side of the vehicle that may not yet be in the side blind zone alert area. The detection zone for lane change alert starts at the outside rearview mirror and extends out to 3.5 m (11 ft) at the back corner of the vehicle and up to 70 m (230 ft) behind the vehicle at a height between 0.5 m (1.5 ft) and 2.0 m (6 ft) above the ground. The system determines when the indicator will illuminate based on the rate of closure, or approach speed, of an approaching vehicle. As the rate of closure become faster, the indicator will illuminate sooner.

Rear Cross Traffic Alert Operation

Rear cross traffic alert displays a red warning triangle with a left or right pointing arrow on the infotainment display to warn of traffic coming from the left or right. This system detects objects coming from up to 20 m (65 ft) from the left or right side of the vehicle. When an object is detected, either three beeps sound from the left or right or three safety alert seat pulses occur on the left or right side, depending on the direction of the detected vehicle.

Driver Information Center Messages

SIDE BLIND ZONE ALERT OFF or LANE CHANGE ALERT OFF

This message indicates that the system has been disabled through the driver information center. Refer to the vehicle owner's manual for instructions on how to set personalization options on the driver information center.

SERVICE SIDE DETECTION SYSTEM

This message indicates that the system requires service. When the message is displayed, the indicators will remain illuminated at all times, notifying the driver that the side blind zone system should not be relied upon when changing lanes. Since the sensors are also used for rear cross traffic alert, this feature will also be inoperative.

SIDE DETECTION SYSTEM UNAVAILABLE

This message indicates that the system has been temporarily disabled because the sensor is blocked or can otherwise not accurately detect vehicles or objects. Such instances may be mud, dirt, snow, ice, or slush build-up on the rear fascia, heavy rainfall, excessive road spray, fascia damage or stickers. An over or under-voltage condition or over-temperaure will also cause the message to display.

The rear cross traffic alert system will read the GPS latitude and longitude on the serial data bus and calculate if the vehicle is within a Radio Astronomy zone. These zones are located in Europe and Japan and require the sensors to be turned off. The “Side Detection System Unavailable” message will be displayed to the driver when this occurs.

The system is continuously fine tuning the radar alignment. If the B218 Side Obstacle Detection Control Module is removed or significantly disturbed, such as removing the rear fascia or sensor bracket, an initial alignment is automatically performed by the system to enable system operation. However, the SIDE DETECTION SYSTEM UNAVAILABLE may remain for several hours of driving as the system fine tunes the radar alignment to ensure satisfactory alert performance.

Super Cruise Description and Operation

Note: ONSTAR SERVICE PLAN REQUIRED. An active OnStar service plan that includes Emergency Services is **required** for Super Cruise operation. The terms and conditions must also be signed for OnStar, otherwise **Super Cruise will not operate**.Verify the OnStar system is not damaged and is operating properly. An Onstar Blue Button press is recommended. Refer to: [Link target (target-id 149641-) not found] . The message “Unavailable GPS Signal Lost” may display if OnStar is not completely set up. This includes such details as the OnStar account does not have the Terms and Conditions signed off.

Super Cruise is available only on limited-access freeways that are separated from opposing traffic.

Super Cruise is designed to be available and engage only under the following conditions:

- Adaptive Cruise Control (ACC) is ON

  Refer to *Adaptive Cruise Control Description and Operation 7-23*
- Forward Collision System set to alert and brake

  Refer to *Forward Collision Alert Description and Operation (without UGN) 7-29* *Forward Collision Alert Description and Operation (with UGN) 7-31*
- The vehicle is on a limited-access freeway
- Camera or radar sensors are not covered, obstructed, or damaged
- The system detects that the driver appears attentive
- The lane markings are clearly visible – lane markings may be obscured, for example, by glare or poor weather conditions
- Teen Driver is not active

How the System Works

Driver Attention Camera

To ensure safety, drivers must pay attention to the road at all times. Our proprietary head tracking software helps make sure your eyes are on the road, and alerts you when you need to pay more attention or take back control.

Steering Wheel Light Bar

If the steering wheel light bar flashes green, the system has detected that the driver may not be paying sufficiently close attention. Refer to *Driver Monitoring Description and Operation 7-41*

The flashing will stop when the system detects that sufficiently close attention to the road has resumed. Refer to *Lane Keep Assist Description and Operation 7-31*

If the steering wheel light bar flashes green for too long, Super Cruise will alert the driver to take control of steering immediately by flashing the light bar red. Also, either beeps will sound or the Safety Alert Seat will vibrate. See “Collision/Detection Systems” under Vehicle Personalization in the Owner’s Manual. Take over steering, then Super Cruise will disengage. To re-engage Super Cruise, press the Super Cruise button on the steering wheel.

If the steering wheel light bar flashes red for too long, a voice command will tell you to take control of the vehicle.

Take control of the steering immediately; Adaptive Cruise Control and Super Cruise will disengage.

A Driver Information Center (DIC) message will indicate that Super Cruise is locked out. Super Cruise cannot be re-engaged until the next ignition cycle.

Continued failure to take over steering will cause the vehicle to slow in your lane of travel and eventually brake to a stop and an OnStar® advisor will be called. The brake lights and hazard warning flashers will come on.

K179 Automated Driving Mapping Module

Automated Driving Mapping Module Downloads

Map database updates and GPS enhancement data are periodically downloaded to the vehicle using the vehicle’s OnStar Wi-Fi hotspot. If a mobile device with its own Wi-Fi hotspot uses the same SSID and password as the vehicle, the vehicle may connect to the mobile device to download the data. To prevent downloading using a mobile device data plan, use a different SSID and password for the vehicle’s Wi-Fi hotspot and the mobile device, or disable the Wi-Fi hotspot of the mobile device when inside the vehicle. To change the Wi-Fi hotspot SSID and password, go to Settings > Wi-Fi.

Automated Driving Mapping Database
Super Cruise uses a LiDAR-scanned map database, which governs system use and enables it only in areas where appropriate road conditions are detected. The advanced map data restricts Super Cruise use to divided, limited-access freeways with defined entry and exit ramps. MAP UPDATES Super Cruise map updates are automatically downloaded via the vehicle's OnStar Wi-Fi hotspot. The Wi-Fi option should always be turned on. To turn on Wi-Fi, go to Settings > Wi-Fi.

For more information on Cadillac Super Cruise, refer to: *http://www.cadillac.com/world-of-cadillac/innovation/super-cruise.html*

For more information on GMC Super Cruise, refer to: *https://www.gmc.com/connectivity-technology/super-cruise*

For more information on Chevorlet Super Cruise, refer to: *https://www.chevrolet.com/support/vehicle/driving-safety/driver-assistance/super-cruise*

Super Cruise Messages on the Driver Information Center Summary

Unavailable Turn on Adaptive Cruise Control	Adaptive Cruise Control must be on before Super Cruise can be enabled. • Set speed is not required before enabling Super Cruise. • Adaptive Cruise Control is not required to be engaged before enabling Super Cruise.
Unavailable Set Forward Collision Setting to Alert and Brake	Super Cruise is disabled unless Alert and Brake is selected. 1. Select the Settings menu, then Vehicle, then Collision/Detection Systems, and then Forward Collision System. 2. Set Forward Collision to Alert and Brake.
Unavailable No Road Information	• There is no map information available for that portion of a controlled access road. Recent road reconstruction may turn off Super Cruise for that section of road until new map information is available. • The vehicle is not on the correct type of road. A controlled access freeway is required for Super Cruise. • There are lanes entering or exiting on both the left and right side of the freeway. • The vehicle is approaching a freeway interchange. The message will appear for 10 seconds or less.
Unavailable Sensors Can't Find Lane Lines	• Rain or snow is inhibiting the system's ability to see lane lines. • Direct sunlight is on the front camera at dawn or dusk. • There are missing or poor lane line markings on the road. • There is sun glare on the road surface. • There is heavy rain, puddles, or road spray.
Unavailable Sensor Can't See Face Clearly	• Sun is shining into the Driver Attention System (DAS) camera. • Dawn or dusk sun glare is on the driver's face. • Cups, food, hands, or other objects are obscuring the DAS view of the driver's face. • The steering column is pointed too high or low for the DAS to see the driver. Adjust the steering column or the seat if the message occurs frequently.
Unavailable Looking Away From Road for Too Long	The driver monitoring system detects that the driver is not looking at the road.
Unavailable Center Vehicle In Lane	The Super Cruise system has determined that the vehicle is not centered in the lane lines. Once the vehicle has been centered in the lane lines, the white ⊛ will display in the instrument cluster indicating that Super Cruise is available.
Unavailable Driving Too Fast	The vehicle is traveling faster than 137 km/h (85 mph). The maximum Super Cruise speed in curves will vary based on how sharp the curve is. The vehicle will automatically decrease speed if needed.
Unavailable Driving in Exit Lane	The Super Cruise system has detected that the vehicle is in an exit lane.
Unavailable GPS Signal Lost	• There is poor reception in isolated areas. • Reception is being blocked by buildings or other large structures.
Unavailable You Have Taken Vehicle Control	• The brake pedal is being pressed. • The Adaptive Cruise Control has been canceled or turned off.
Unavailable Sensor Blocked	Clear snow, ice, dirt, or other contaminants from the front and rear areas of the vehicle.
Unavailable Sharp Curve	Some curves are too sharp to be navigated by the Super Cruise system. Super Cruise will be available after the curve is traveled.
Super Cruise Unavailable	Super Cruise is unavailable for reasons not described in other messages.
Super Cruise Locked Out See Owner's Manual	The driver did not take control of the vehicle when prompted by the Super Cruise system. The Super Cruise system will be disabled until the ignition is turned off and back on.

Driver Monitoring and Occupant Detection

Schematic and Routing Diagrams

6613524

Driver Monitoring Schematics (Driver Monitoring System (UKL))

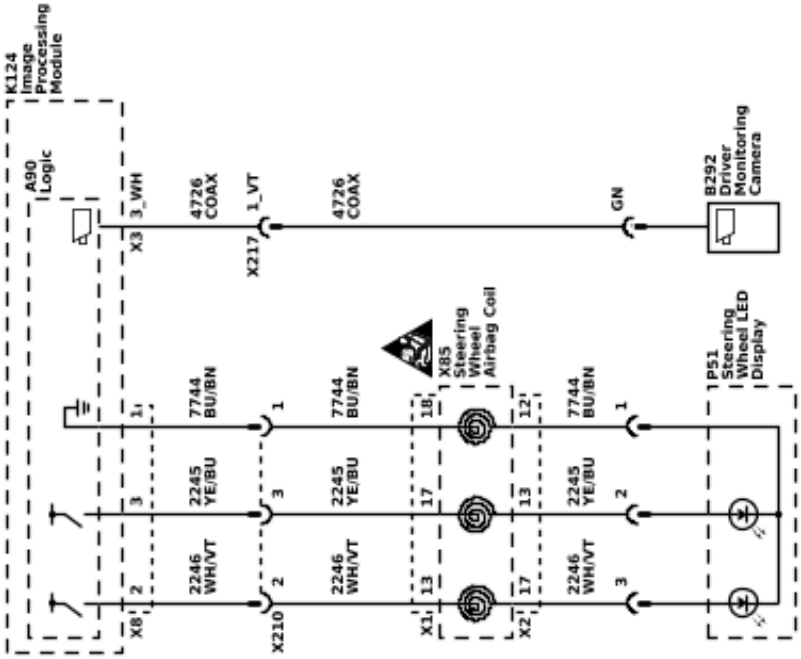

6689097

Occupant Detection Schematics (Occupant Detection)

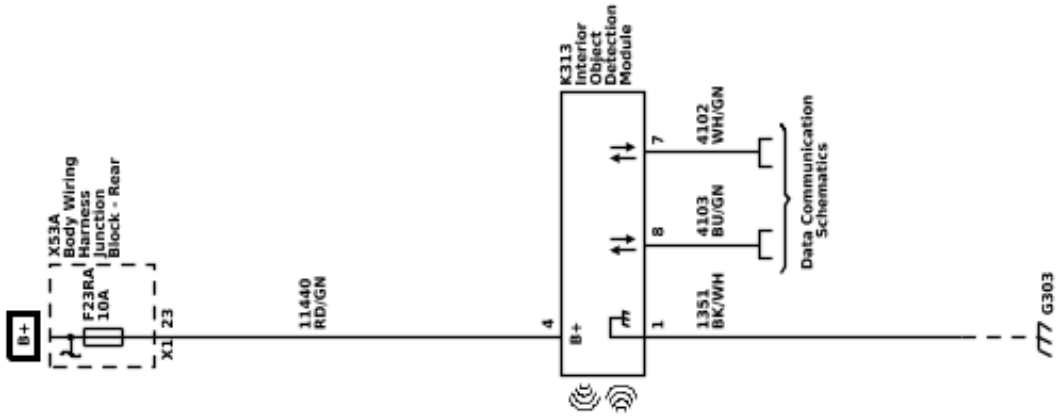

Description and Operation

Driver Monitoring Description and Operation

System Operation

The driver monitoring system is part of the Adaptive Cruise Control with Lane Following (RPO: UKL) feature.

The driver monitoring system (DMS) utilizes an infrared camera located on the steering column, and infrared illumination provided by IR LEDs embedded in the steering wheel to monitor the driver and provide an estimate of the driver's attention state to the Image Processing Module. The resultant image of the Driver is not visible to the driver or GM Service. The driver monitoring system is used as an input to enable/disable the SuperCruise system; therefore driver monitoring system should only be active when its function is requested by the Image Processing Module. For many drivers, the driver monitoring system IR LEDs may be visible as a dim red glow when the system is active.

The driver monitoring system requires the IR illumination LEDs to be illuminated for operation. The LEDs turned on by K124 Image Processing Module command and will only be illuminated when the Adaptive Cruise Control (ACC) with Lane Following is engaged by the customer.

Additionally, all the video signal circuits are twisted and shielded to prevent any interference that may lead to a loss of video signal resolution and cause a degraded video image. These circuits must not be spliced/removed from shielding or will cause image degradation.

Driver Monitoring Components

The Driver Monitoring system consists of the following components:

- Driver Monitoring Camera
- Driver Monitoring Control Module
- Driver Monitoring Indicators

Driver Monitoring System Outputs

Driver Monitoring System will monitor driver's head position and area of interest and notify Image Processing Module of the driver's attention state. Possible attention states are:

- On Road
- Off Road
- Lap Zone (a special case of Off Road)
- Center Console (a special case of Off Road)
- PVOE (Eyes Closed): eyes closed or eyes not visible
- Unknown: This value indicates that the driver cannot be tracked or driver's visual attention state cannot be estimated, for whatever reason
- Invalid: This value indicates that the driver monitor system is not presently attempting to determine the driver's attention state due to, either a fault is present in the system, or the system has not completed a self-diagnostic and therefore cannot provide a trustworthy output

Driver Monitoring System Operation

In order for the driver monitor system to function correctly, the driver's face must be oriented such the camera can view that facial features from above the eyes to below the mouth. See the driver interaction section below for helping customers understand conditions that might prevent the system from recognizing a driver. When assessing the driver's area of attention (where the driver is looking), the driver monitor system primarily uses the orientation of the face, and uses the eyes/eyelids as a secondary input. Therefore, if a driver looks at a location with the eyes only (without turning his/her head) driver monitor system will most likely report where the face is oriented as if the eyes are straight forward. This is critical if the driver is required to look at a small area of interest such as the center console; the face must be distinctly oriented towards the center console region for driver monitor system to acknowledge a glance, such as for a driver alertness check glance.

The driver monitor system Control Module receives constant power from a direct connection to battery; a constant ground signal; and a wake-up signal (COMM_ENABLE) and GM_LAN communication from the Image Processing Module. The Control Module supplies power and command signal to the driver monitor system camera, and the camera provides live images and camera exposure information to the Control Module through a co-axial cable connection. The Control Module also provides power and control signals to the IR LEDs located within the steering wheel.

The Image Processing Module wakes/puts to sleep up the driver monitor system system through a COMM_ENABLE signal; a high signal wakes the driver monitor system, and low signal puts the driver monitor system to sleep.

Once the driver monitor system is awake, the Image Processing Module forces the driver monitor system IR LEDs to an OFF state if the driver monitor system function is not required (SuperCruise is not requested by the driver). In this case, driver monitor system will report over GM-LAN that driver monitor system is unavailable (driver monitor system_Available = FALSE).

Once the driver requests SuperCruise function, the Image Processing Module will allow driver monitor system to control the IR LEDs. Once IR LED control is allowed, the driver monitor system will begin to attempt to track the driver, and report driver attention state as described above.

During normal operation of driver monitor system, because of normal, transient behavior of the driver, it will be normal for the driver monitor system to occasionally report “Unknown” driver attention state, such as if the driver turns their face away from the camera, or moves their head out of camera view.

If the driver monitor system is unable to track the head and/or eyes for an extended period of time, which can be due to driver behavior and/or appearance, the driver monitor system may conclude that it is unable to safely track and report the driver attention. In this case, the driver monitor system will report that it is unavailable for use (driver monitor system_Available = FALSE). This will cause the SuperCruise function to disengage, and the IR LEDs will be forced off by the Image Processing Module again. The driver monitor system will not resume operation again until the Image Processing Module once again returns control of the IR LEDs to the driver monitor system.

The video signal is shielded to prevent any interference that may lead to a loss of video signal resolution which could degrade the system performance and cause the driver monitor system to lose track of the driver’s facial features. The video circuit must not be spliced/removed from shielding or the image could be degraded and driver monitor system performance negatively affected

Driver Monitoring – Driver Interaction

If a customer complains that Adaptive Cruise Control (ACC) with Lane Following (LF) is not engaging as they would expect or lighting the steering wheel mounted light bar yellow or red too often, and there are no DTC codes set with any of the related components, the system may be turning off because the driver is not recognized. Careful questioning of the driver about their driving habits and when the condition occurs made aid in resolving the issue to their satisfaction.

For best system performance, follow these guidelines:

- Do not block the driver monitor system camera with personal items
- Do not block the indicators on the steering wheel
- When the driver is seated and using the feature, the driver’s head must be above the steering wheel rim. Driver must also be able to reach the steering wheel to control the vehicle while ACC/LF is in use, driver monitor system will not recognize a driver seated in an excessively reclined seat.
- As noted in the Owner’s Manual, if the driver’s head height is similar to the steering wheel rim, lowering the steering wheel tilt may improve the driver monitor system ability to recognize the driver.
- Driver must no have face is fully or partially obscured, such as by clothing, hair, hand gestures or held items (food, phone, cigarettes, etc.)
- Sunglasses may reduce the systems ability to track the driver, avoid glasses with reflective lenses. Not all sunglasses will work with the system.
- Avoid apparel that covers the face and/or eyes.

Driver Monitoring Camera Cleaning

The driver monitor system is designed to function without any period maintenance. However, over the course of time and normal vehicle use it is possible that the camera lens cover may become dirty and affect camera performance. If the camera lens cover requires cleaning, it may be cleaned with a soft cloth and normal household non-abrasive cleaners, such as glass cleaner. Never use any abrasive cloths and/or abrasive cleaners to clean the camera lens cover. Never use corrosive chemicals of any kind on the camera lens cover.

Immobilizer

Schematic and Routing Diagrams

Immobilizer Schematics (Immobilizer)

6613525

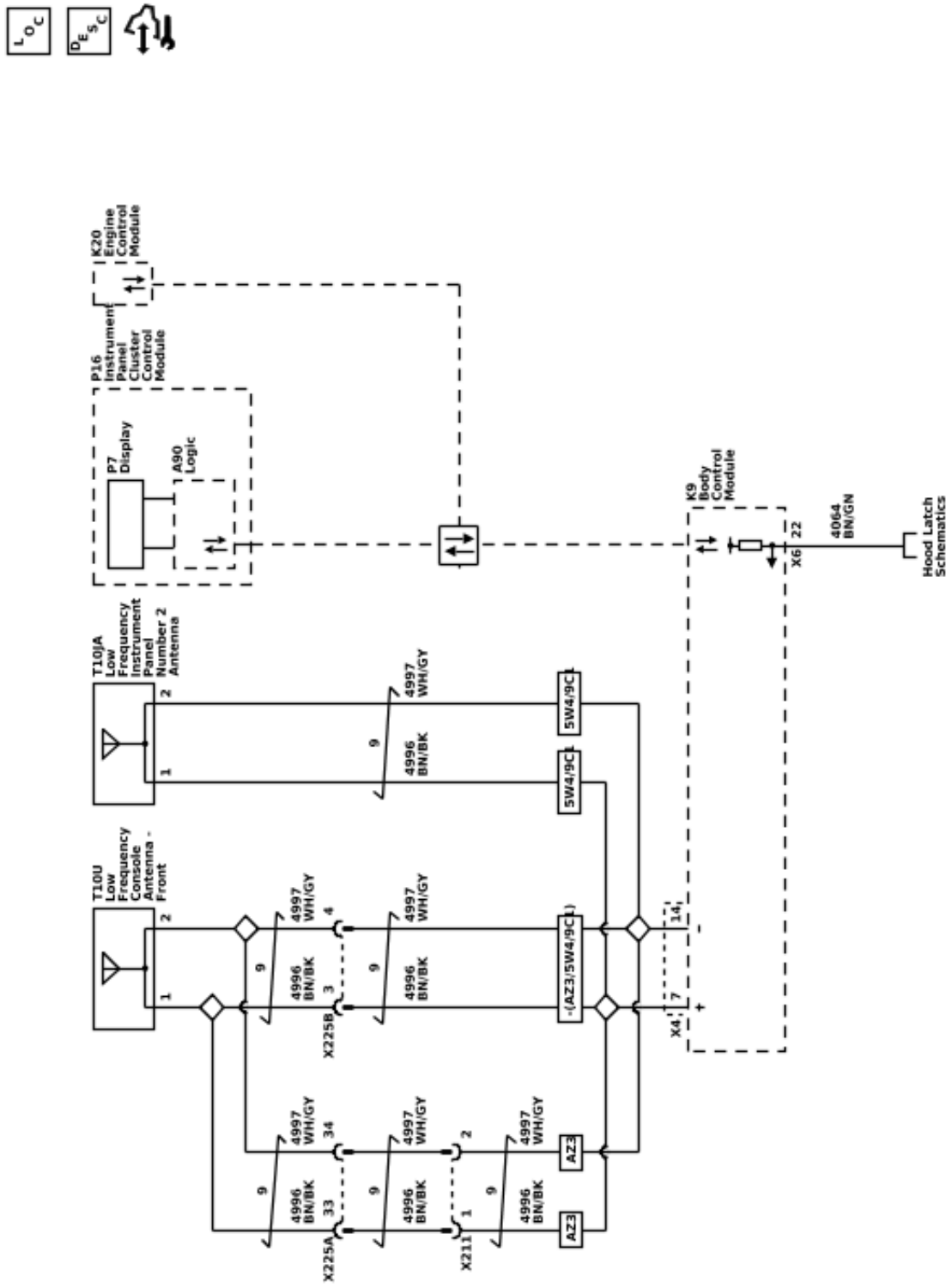

Description and Operation

Immobilizer Description and Operation

The immobilizer system functions are provided by the Steering Column Lock Module, the Body Control Module (BCM), and the Engine Control Module (ECM), as well as any control modules which store and report the environment identifier. The Body Control Module uses low frequency antennas in different locations on the vehicle to determine the location of the transmitter. Multiple transmitting antennas are used to ensure complete coverage of the vehicle interior and rear compartment. These antennas transmit to the keyless entry transmitter.

When the vehicle Stop/Start switch is pressed, the low frequency antennas emit a challenge to the keyless entry transmitter. The transmitter receives this challenge and emits it's response as an RF message. The BCM then compares this value to a value stored in memory. The BCM also monitors various control modules to determine if the stored environment identifiers match.

If the correct transponder is detected, the electric steering column is unlocked, and there is no start disable from OnStar the BCM will send the prerelease allowed message via serial data to the ECM. The vehicle will be allowed up to 3 seconds run time. If the theft check is incorrect, the environment identifier check fails, the incorrect transponder is detected, the electric steering column is locked, or there is a start disable from OnStar, the BCM will send a negative response and the ECM will not start the vehicle or will immediately shut off the vehicle if prerelease allowed the vehicle to start.

If RF communication is interrupted, a "No Remote Detected" message will be displayed on the DIC. In these cases, the transmitter can be placed in the transmitter pocket. The immobilizer coil antenna is located in the immediate vicinity of the transmitter pocket. Placing the transmitter in the pocket/slot will create a low powered coupling between the transmitter and immobilizer coil antenna, allowing communications to occur and enabling vehicle starting.

The components of the immobilizer system are as follows:

- BCM
- ECM
- Steering column lock control module
- Immobilizer coil antenna
- Low frequency antenna
- Ignition key/Keyless entry transmitter
- Security indicator
- Various control modules which store and report the environment identifier

Body Control Module (BCM)

The immobilizer system is an integral part of the BCM and is controlled internally within the BCM. The BCM can learn up to 8 keys (transponder values). The BCM uses low frequency antennas in three different locations on the vehicle to determine the location of the transmitter. Multiple antennas are used to ensure complete coverage of the vehicle interior and rear compartment. The BCM monitors the ignition mode switch. When the ignition mode is changed, the BCM will command, or “ping”, the low frequency antenna.

The BCM uses the following inputs:

- Environment identifier exchange with various modules
- Encrypted code from the vehicle key, received by the immobilizer coil antenna if the keyless entry transmitter signal isn’t detected as indicated by the “No Remote Detected” message
- Encrypted code from the vehicle key

The BCM uses the following outputs:

- Prerelease Allowed signal communication with ECM
- Challenge/Response with ECM

When a transponder value is received by the BCM, the BCM will compare this value to the learned key code stored in memory. The BCM then performs one of the following functions:

- If the encrypted code value matches the values stored in the BCM memory, the BCM will send the Prerelease Allowed signal to the ECM via serial data.
- If the encrypted code unique value does not match the value stored in the BCM, the BCM will send the start disable message to the ECM via serial data.
- If the BCM is unable to receive the vehicle key encrypted code value, the BCM will not send any messages to the ECM.

Engine Control Module (ECM)

The ECM receives the BCM Prerelease Allowed signal and simultaneously the ECM sends a challenge to the BCM via the serial data circuit upon seeing the vehicle transition from OFF to any other power mode. Both the ECM and BCM perform a calculation on this challenge. If the calculated response from the BCM equals the calculation performed by the ECM, the ECM will allow vehicle starting.

Low Frequency Antenna

When commanded, or “pinged”, the low frequency antenna broadcast a challenge to the keyless entry transmitter. Because of the low power of the antenna, this challenge is only broadcast in an approximate three meter range of the antenna. Multiple antenna are used to ensure complete coverage of the vehicle interior and rear compartment.

Steering Column Lock Control Module

On vehicles with electronic steering column lock that use a steering column lock control module the immobilizer system will prevent vehicle starting if there is a fault or no communication with the steering column lock control module.

Keyless Entry Transmitter

Each keyless entry transmitter contains a transponder with a unique encrypted value. The transponder's encrypted value is fixed and unable to be changed. The immobilizer system uses the keyless entry transmitter transponder value to determine if a valid keyless entry transmitter is being used to start the vehicle.

Security Indicator

The BCM will command the Instrument Cluster to illuminate the security indicator when the vehicle is ON to indicate a fault has occurred within the immobilizer system.

Remote Vehicle Speed Limiting Description and Operation

Certain vehicles equipped with OnStar® now have an additional feature that allows for remote limiting of the vehicle's speed. This OnStar® feature is called Stolen Vehicle Slow-Down and is now part of the OnStar® Stolen Vehicle Assistance service. This feature, when used in conjunction with local law enforcement and strict guidelines at the OnStar® Call Center, will slow the vehicle by interacting with the engine control system.

When the engine control system receives a valid request from the OnStar® telematics communications interface module, it will enter into a reduced engine power/vehicle speed limiting mode, which will decelerate the vehicle. Once the request is active the engine control module begins reducing engine torque to match requested vehicle speed and a REDUCED ENGINE POWER indication is displayed. No DTCs will be set during this process.

Parking Assistance Systems

Schematic and Routing Diagrams

Parking Assistance Systems Schematics (Park Assist - Controls, Power, Ground, and Serial Data)

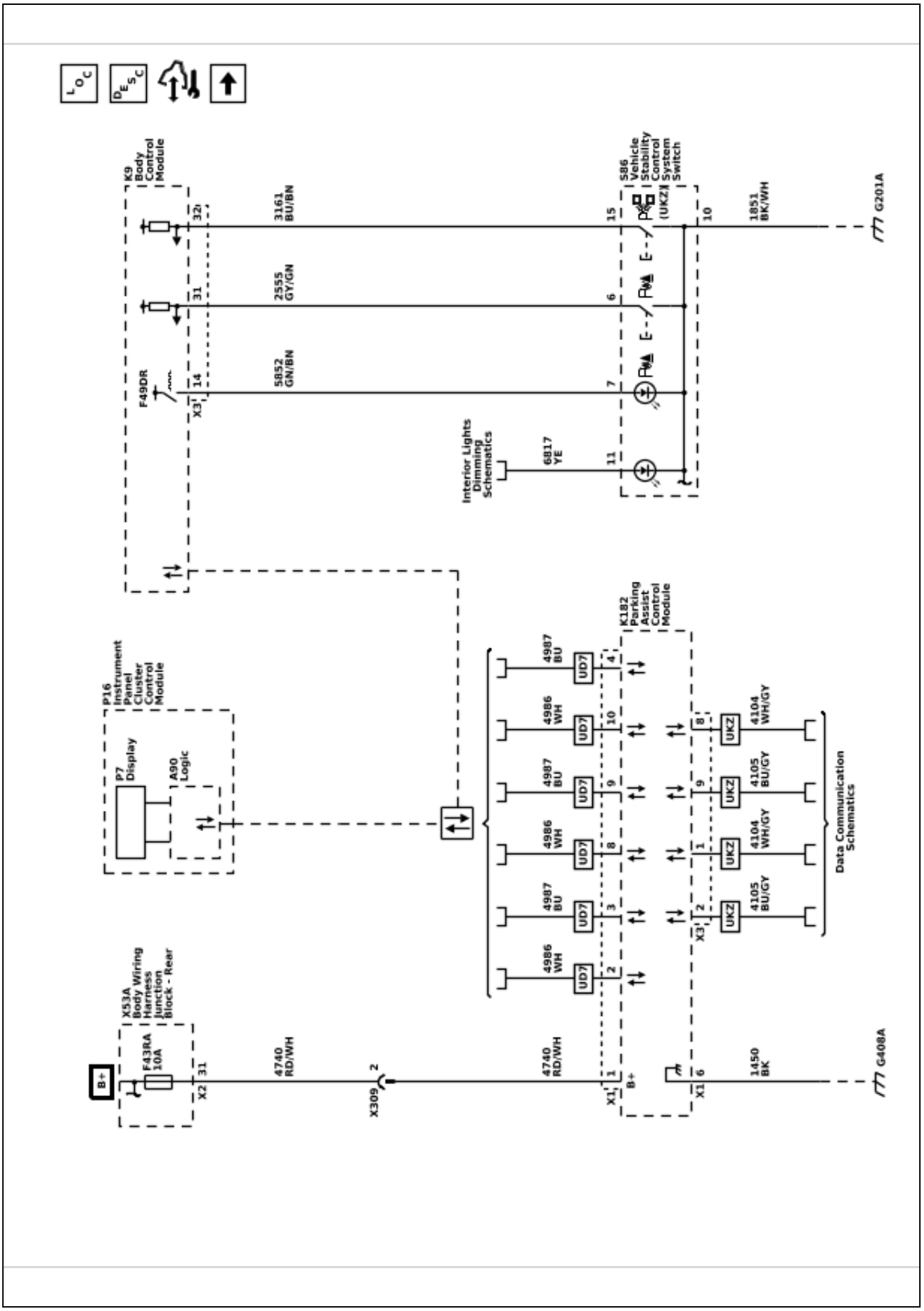

6613526

Parking Assistance Systems Schematics (Park Assist - Front Sensors (UKZ))

6613528

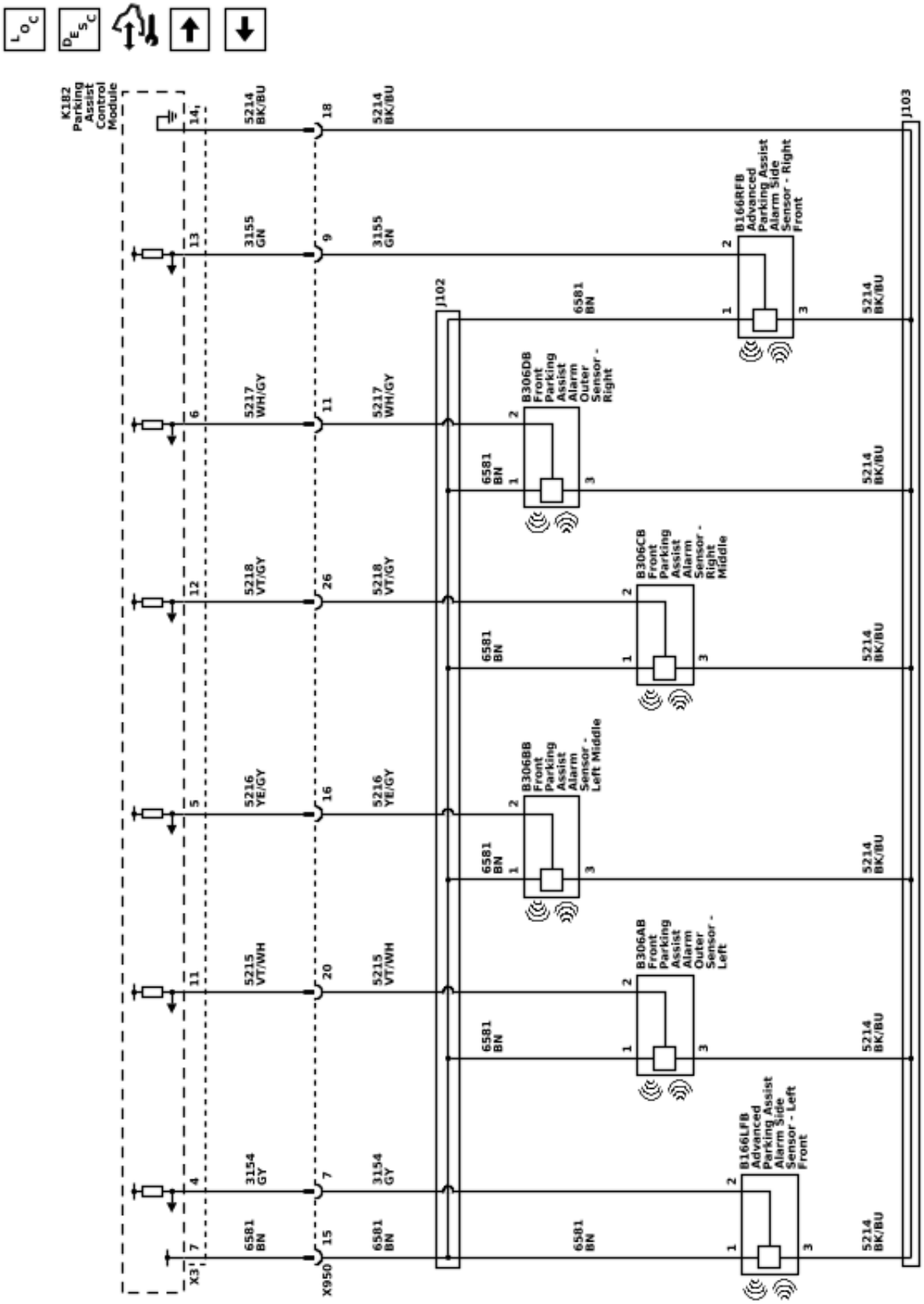

Parking Assistance Systems Schematics (Park Assist - Rear Sensors)

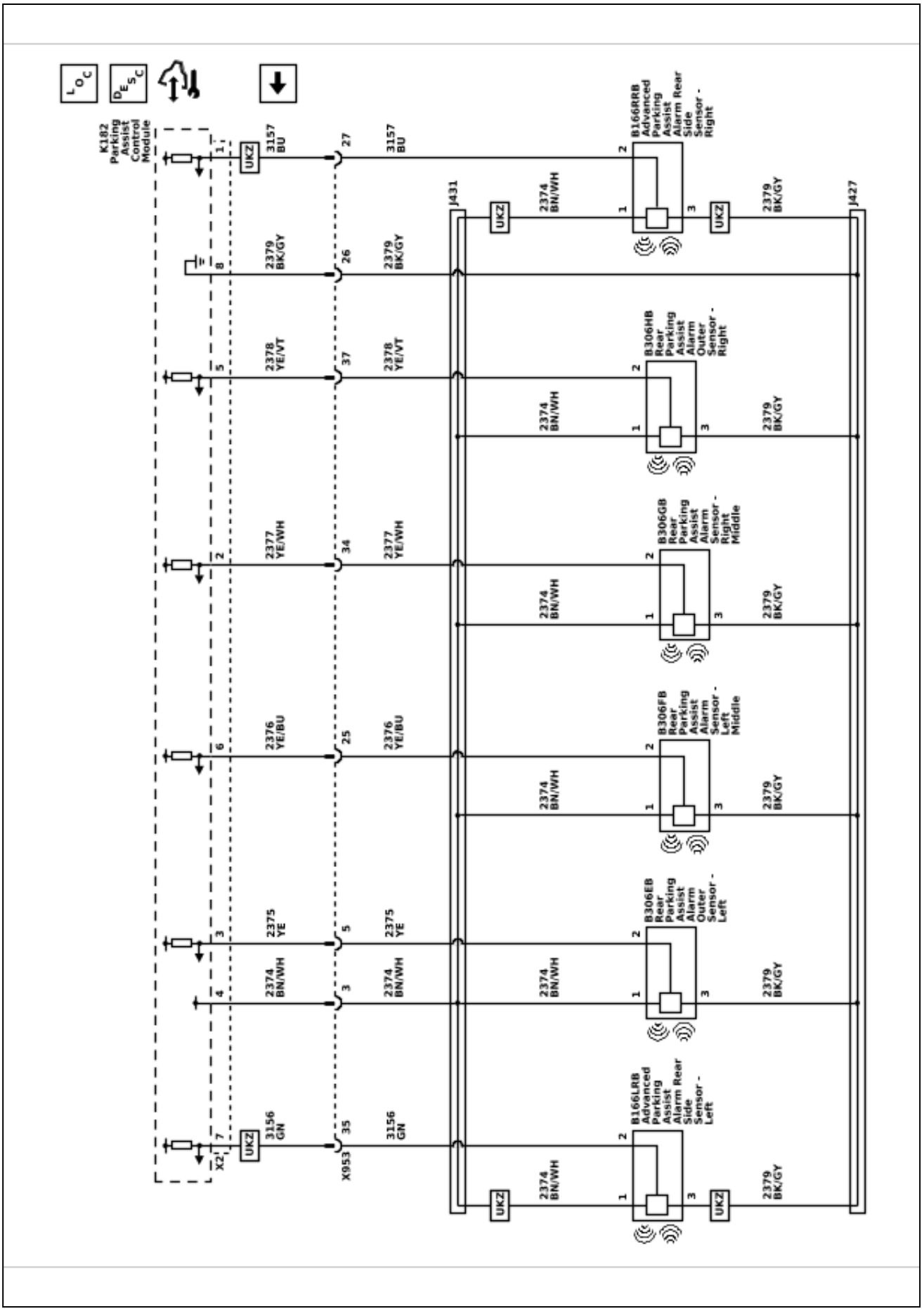

6613527

Description and Operation

Parking Assist Description and Operation (UD5)

The parking assist system can help drivers avoid certain objects in their path during low-speed parking. The distance and location of the object is determined by four object sensors located in the rear fascia. The parking assist system may not detect all children, pedestrians, bicyclists, animals or objects below the bumper. Drivers should remember to always check the area around the vehicle before shifting into REVERSE. The parking assist system will not stop or slow down a vehicle. It does not engage a vehicle's throttle or braking. No safety system can take the place of an alert and engaged driver.

The parking assist system is made up of the following components:

- K182 Parking Assist Control Module
- B306 Parking Assist Alarm Sensors
- Infotainment system

K182 Parking Assist Control Module

The K182 Parking Assist Control Module provides a reference voltage and a low reference to the B166/B306 Parking Assist Alarm Sensors. The K182 Parking Assist Control Module receives individual signals from each of the four B166/B306 Parking Assist Alarm Sensors and determines the location and distance of an object based on these inputs. When an object is detected, the K182 Parking Assist Control Module will send a serial data message to the infotainment system requesting an audible alert.

B166/B306 Parking Assist Alarm Sensors

The B166/B306 Parking Assist Alarm Sensors are located in the rear fascia of the vehicle. The sensors are used to determine the distance between an object and the bumper. Each sensor emits an ultrasonic frequency which is reflected off any object located behind the vehicle. These reflections are received by the sensors. The time difference between the emission of the frequency and when the reflection is received is known as sensor echo time; it is used to determine the distance to the object. The sensors report this information to the K182 Parking Assist Control Module.

Infotainment System

The infotainment system controls the audible alert for the parking assist system. If the an object is detected the infotainment system will command beeps as an audible alert to the driver.

Rear Parking Assist Operation

The rear parking assist system uses four B166/B306 Parking Assist Alarm Sensors located on the rear fascia and functions when the transmission is in REVERSE. When a driver is backing up at a low speed, up to about 11 km/h (7 mph), the B166/B306 Parking Assist Alarm Sensors may detect objects up to 1.8 m (6 ft) behind the vehicle. When an object is within the measuring range of the B166/B306 Parking Assist Alarm Sensors, the ultrasonic pulse is reflected and is received by the sending or a neighboring sensor. The sensor converts this signal into a voltage signal and sends this signal to the K182 Parking Assist Control Module. The K182 Parking Assist Control Module evaluates the received sensor signals.

When an object is within 0.6 m (2 ft) of the rear bumper, 5 repeating low-pitched beeps are played from the rear speakers, followed by a continuous tone. If the vehicle is equipped with the Safety Alert Seat (HS1), it will pulse 5 times on both sides.

Some vehicles may have a park assist display on the P16 Instrument Panel Cluster Module with bars that show "distance to object," driving direction, and object location information for the parking assist system. As the vehicle gets closer to the detected object, distance-to-object information and caution triangles may be displayed that changes from yellow to amber to red.

The parking assist system can be turned on and off using the parking assist switch.

The K182 Parking Assist Control Module carries out a self test and monitors the sensors for electrical and mechanical faults. Monitored is the power supply of each sensor and the sensor signals. Mud, ice and snow may cause obstruction of the function of the sensors. The K182 Parking Assist Control Module also determines if the correct type of sensor is installed. If any of these tests fails, a DTC with corresponding symptom is set and the parking assist system is deactivated.

Parking Assist System Messages

SERVICE PARKING ASSIST or SERVICE DRIVER ASSIST

The driver information center displays SERVICE PARKING ASSIST or SERVICE DRIVER ASSIST when the K182 Parking Assist Control Module detects a malfunction in the parking assist system and the system is disabled.

PARK ASSIST OFF

The PARK ASSIST OFF message is displayed in the driver information center when the parking assist system is disabled due to conditions that disable or inhibit the system. The K182 Parking Assist Control Module requests the driver information center display PARK ASSIST OFF when it detects such a condition.

Parking Assist System Operational Checks

The scan tool Parking Assist Disable History 1–8 data can be used to diagnose a malfunction within the parking assist system or an intermittent concern. The following is a brief description of potential causes which may aid in diagnosis. For each potential issue, perform an appropriate inspect of the component or system and refer to the specific service information subsection related to that system for further diagnosis:

- Disable by Switch – The parking assist system has been disabled through the parking assist switch.
- Disabled by Customization Menu – The parking assist system has been disabled through the vehicle personalization menu.
- Vehicle Speed Too High – The vehicle is travelling too fast in reverse at speeds of greater than 8 km/h (5 mph).
- Vehicle Speed Invalid – The vehicle is unable to determine the vehicle speed.
- Steering Angle Signal Invalid – The vehicle is unable to determine the steering angle.
- Front Attached Object Detected – An object has been determined to be attached to the front of the vehicle. Common items such as a brush guards, light bars, and license plates may cause this concern. Additionally, damage to the front of the vehicle or a misaligned sensor may cause this concern. If the vehicle is damaged in a manner that causes the sensor to detect the bumper itself, the parking assist control module will interpret this as an attached object and disable the system. Carefully inspect the bumper, bumper mounting surface, and sensor retainers before continuing with normal diagnosis. After the detected cause has been addressed the vehicle must be driven at speed greater than 40 km/h (25 MPH).
- Rear Attached Object Detected – An object has been determined to be attached to the rear of the vehicle. Common items such as a hitch receiver, trailer, or a bicycle rack may cause this concern. Additionally, damage to the rear of the vehicle or a misaligned sensor may cause this concern. If the vehicle is damaged in a manner that causes the sensor to detect the bumper itself, the parking assist control module will interpret this as an attached object and disable the system. Carefully inspect the bumper, bumper mounting surface, and sensor retainers before continuing with normal diagnosis. After the detected cause has been addressed the vehicle must be driven at speed greater than 40 km/h (25 MPH).
- Front And Rear Attached Object Detected – An object has been determined to be attached to the front and rear of vehicle.
- Parking Assist Alarm Sensor Blocked – One of the following conditions may be present:
  - One or more of the sensors may be blocked by snow, mud, ice, or other debris. This might happen after going through a car wash in cold weather.
  - Silicone insulator surrounding sensor maybe missing, cut, or twisted.
  - Improperly installed sensor, sensor maybe be crooked due to a tight wire harness.
  - One or more of the sensors may be scratched or the paint maybe chipped.
  - Excessive paint thickness on a sensor may cause an excessive sensor ring time. When replacing or refinishing a sensor, do not apply an excessive amount of paint or clear coat.
- Haptic Seat Malfunction – A fault exists with the safety alert seat. Check for DTCs.
- Chime Malfunction – A fault exists with the vehicle chime. Check for DTCs.
- Parking Assist Switch Malfunction – A fault exists with the parking assist switch. Check for DTCs.
- Invalid Gear – The vehicle has determine a plausibility fault exists with the transmission range.
- Incorrect Power Mode – The vehicle is in an incorrect power mode for parking assist operation.

Parking Assist Description and Operation (UKZ)

Note: The automatic parking assist system can steer the vehicle automatically. Be aware that, in some unlikely situations, the vehicle steering wheel and wheels/tires may move without warning. Please be especially aware of situations when vehicle front tires are lifted above the ground on a vehicle hoist as the wheels could move without warning. Please exercise special care if any work is performed with the vehicle running and in gear while elevated on a hoist.

In addition to the eight B166/B306 Parking Assist Alarm Sensors used for front and rear park assist, the automatic parking assist system uses two additional B166/B306 Parking Assist Alarm Sensors located on the front fascia and two additional B166/B306 Parking Assist Alarm Sensors located on the rear fascia. These sensors face toward the side of the vehicle and are used to aid the driver in positioning the vehicle in a parallel parking maneuver.

Note: Any malfunction in the parking assist system may disable automatic parking assist. Automatic parking assist will not operate if the parking assist system is disabled.

Automatic Parking Assist Components

The parking assist system is made up of the following components:

- K182 Parking Assist Control Module
- K124 Image Processing Module
- B166/B306 Parking Assist Alarm Sensors
- K9 Body Control Module
- Parking Assist Switch
- Parking Assist Switch Indicator
- Automatic Parking Assist Switch
- Safety Alert Seat (with HS1)
- Infotainment System

K182 Parking Assist Control Module
The K182 Parking Assist Control Module provides a reference voltage and a low reference to the B166/B306 Parking Assist Alarm Sensors. The K182 Parking Assist Control Module receives individual signals from each of the four B166/B306 Parking Assist Alarm Sensors and determines the location and distance of an object based on these inputs. When an object is detected, the K182 Parking Assist Control Module will send a serial data message to the infotainment system requesting an audible alert.

B166/B306 Parking Assist Alarm Sensors
The B166/B306 Parking Assist Alarm Sensors are located in the front and rear fascia of the vehicle. The sensors are used to determine the distance between an object and the bumper. Each sensor emits an ultrasonic frequency which is reflected off any object located behind the vehicle. These reflections are received by the sensors. The time difference between the emission of the frequency and when the reflection is received is known as sensor echo time; it is used to determine the distance to the object. The sensors report this information to the K182 Parking Assist Control Module.

K9 Body Control Module
The K9 Body Control Module monitors the parking assist switch and control the parking assist switch indicator. When the parking assist switch is pressed, a serial data message is sent to the K182 Parking Assist Control Module indicating the driver is requesting the system be enabled or disabled. The K182 Parking Assist Control Module responds with a message that the system has been enabled or disabled. The K9 Body Control Module will respond by turning the parking assist switch indicator on or off.

The K9 Body Control Module also monitors the automatic parking assist switch. When the automatic parking assist switch is pressed, a serial data message is sent to the K182 Parking Assist Control Module indicating the driver is requesting the advance parking assist function. The K182 Parking Assist Control Module responds by beginning to search for a suitable parking space if conditions are correct.

On vehicles with HS1, without A45, the K9 Body Control Module also controls the P45 Seat Haptic Movement Motors for Safety Alert Seat operation.

Parking Assist Switch
The parking assist system can be activated and deactivated by pressing the parking assist switch. The K9 Body Control Module applies voltage and monitors the parking assist switch signal circuit. The parking assist switch is a normally open switch. With the switch open, voltage seen at the K9 Body Control Module is high. When the parking assist switch is pressed, the switch is closed and the signal circuit is pulled to ground. With the switch closed, voltage seen at the K9 Body Control Module is low. The K9 Body Control Module will respond to this by sending a serial data message to the K182 Parking Assist Control Module to enable or disable the system.

Parking Assist Switch Indicator
When the parking assist system is enabled, the K124 Image Processing Module will illuminate the indicator on the switch. The indicator is controlled through a low control circuit by the K124 Image Processing Module.

Automatic Parking Assist Switch
The automatic parking assist system can be activated and deactivated by pressing the automatic parking assist switch. The K9 Body Control Module applies voltage and monitors the automatic parking assist switch signal circuit. The automatic parking assist switch is a normally open switch. With the switch open, voltage seen at the K9 Body Control Module is high. When the automatic parking assist switch is pressed, the switch is closed and the signal circuit is pulled to ground. With the switch closed, voltage seen at the K9 Body Control Module is low. The K9 Body Control Module will respond to this by sending a serial data message to the K182 Parking Assist Control Module to enable or disable the system.

Safety Alert Seat (with HS1, without A45)
The K9 Body Control Module controls the P45 Seat Haptic Movement Motors. The P45 Seat Haptic Movement Motors provide haptic alert to the driver. If an object is detected, the K9 Body Control Module will command pulses to the P45 Seat Haptic Movement Motors as an alert to the driver.

Safety Alert Seat (with HS1 and A45)
The K40D Driver Seat Adjuster Memory Module controls the P45 Seat Haptic Movement Motors. The P45 Seat Haptic Movement Motors provide haptic alert to the driver. If an object is detected, the K40D Driver Seat Adjuster Memory Module will command pulses to the P45 Seat Haptic Movement Motors as an alert to the driver.

Infotainment System
The infotainment system controls the audible alert for the parking assist system. If the an object is detected the infotainment system will command beeps as an audible alert to the driver.

Parking Assist Operation

The rear parking assist system uses four B166/B306 Parking Assist Alarm Sensors located on the rear fascia and functions when the transmission is in REVERSE. When a driver is backing up at a low speed, up to about 11 km/h (7 mph), the B166/B306 Parking Assist Alarm Sensors may detect objects up to 1.8 m (6 ft) behind the vehicle. When an object is within the measuring range of the B166/B306 Parking Assist Alarm Sensors, the ultrasonic pulse is reflected and is received by the sending or a neighboring sensor. The sensor converts this signal into a voltage signal and sends this signal to the K182 Parking Assist Control Module. The K182 Parking Assist Control Module evaluates the received sensor signals.

When an object is within 0.6 m (2 ft) of the rear bumper, 5 repeating low-pitched beeps are played from the rear speakers, followed by a continuous tone. If the vehicle is equipped with the Safety Alert Seat (HS1), it will pulse 5 times on both sides.

The front parking assist system uses four B306 Parking Assist Alarm Sensors located on the front fascia and functions when the vehicle is moving forward at low speeds. When a driver is driving forward at a low speed, up to about 11 km/h (7 mph), the B166/B306 Parking Assist Alarm Sensors may detect objects up to 1.8 m (6 ft) in front of the vehicle. When an object is within the measuring range of the B166/B306 Parking Assist Alarm Sensors, the ultrasonic pulse is reflected and is received by the sending or a neighboring sensor. The sensor converts this signal into a voltage signal and sends this signal to the K182 Parking Assist Control Module. The K182 Parking Assist Control Module evaluates the received sensor signals.

When an object is within 0.3 m (1 ft) of the front bumper, 5 repeating low-pitched beeps are played from the front speakers, followed by a continuous tone. If the vehicle is equipped with the Safety Alert Seat (HS1), it will pulse 5 times on both sides. The tone for front parking assist is higher pitched than the tone for rear parking assist.

Some vehicles may have a park assist display on the P16 Instrument Panel Cluster Module with bars that show "distance to object," driving direction, and object location information for the parking assist system. As the vehicle gets closer to the detected object, distance-to-object information and caution triangles may be displayed that changes from yellow to amber to red.

The parking assist system can be turned on and off using the parking assist switch.

The K182 Parking Assist Control Module carries out a self test and monitors the sensors for electrical and mechanical faults. Monitored is the power supply of each sensor and the sensor signals. Mud, ice and snow may cause obstruction of the function of the sensors. The K182 Parking Assist Control Module also determines if the correct type of sensor is installed. If any of these tests fails, a DTC with corresponding symptom is set and the parking assist system is deactivated.

Automatic Parking Assist Operation

The automatic parking assist system aids the driver when attempting a parking maneuver. The K182 Parking Assist Control Module uses the four additional side-facing B306 Parking Assist Alarm Sensors located in the front and rear fascia, along with the eight typical forward and rearward-facing B306 Parking Assist Alarm Sensors, to guide the driver into a parking space.

Note: The driver seat belt must be buckled for the Automatic Parking Assist to operate. Unbuckling the seat belt during Automatic Parking Assist operation can cause the system to stop and not complete the parking maneuver.

The automatic parking assist switch is used to initiate the parking assist system when traveling at speeds below approximately 30 km/h (18 mph) (refer to owners manual for exact speed). While driving along a row of vehicles in which the driver wishes to park, the parking assist is activated by a switch or the infotainment screen. This will enable the automatic parking assist system and the K182 Parking Assist Control Module will begin seeking potential parking spots using the B306 Parking Assist Alarm Sensors.

When a parking spot of suitable size is found, the K182 Parking Assist Control Module will display a stop message on the driver information center. The driver accepts the decision by stopping the vehicle. The system calculates the optimal path into the parking spot and will then guide the vehicle into the chosen spot by taking over the shifting, steering, and braking control from the driver. Once in the parking spot, the K182 Parking Assist Control Module will center the vehicle in the spot.

If the automatic parking assist system is unable to complete a parking maneuver, a message indicating that the maneuver has been aborted will be displayed on the driver information center. Vehicle control will be given back to the driver once the brake or parking brake is applied.

Parking Assist System Messages

SERVICE PARKING ASSIST or SERVICE DRIVER ASSIST

The driver information center displays SERVICE PARKING ASSIST or SERVICE DRIVER ASSIST when the K182 Parking Assist Control Module detects a malfunction in the parking assist system and the system is disabled.

PARK ASSIST OFF

The PARK ASSIST OFF message is displayed in the driver information center when the parking assist system is disabled due to conditions that disable or inhibit the system. The K182 Parking Assist Control Module requests the driver information center display PARK ASSIST OFF when it detects such a condition.

Parking Assist System Operational Checks

The scan tool Parking Assist Disable History 1–8 data can be used to diagnose a malfunction within the parking assist system or an intermittent concern. The following is a brief description of potential causes which may aid in diagnosis. For each potential issue, perform an appropriate inspect of the component or system and refer to the specific service information subsection related to that system for further diagnosis:

- Disable by Switch – The parking assist system has been disabled through the parking assist switch.
- Disabled by Customization Menu – The parking assist system has been disabled through the vehicle personalization menu.
- Vehicle Speed Too High – The vehicle is travelling too fast in reverse at speeds of greater than 8 km/h (5 mph).
- Vehicle Speed Invalid – The vehicle is unable to determine the vehicle speed.
- Steering Angle Signal Invalid – The vehicle is unable to determine the steering angle.
- Front Attached Object Detected – An object has been determined to be attached to the front of the vehicle. Common items such as a brush guards, light bars, and license plates may cause this concern. Additionally, damage to the front of the vehicle or a misaligned sensor may cause this concern. If the vehicle is damaged in a manner that causes the sensor to detect the bumper itself, the parking assist control module will interpret this as an attached object and disable the system. Carefully inspect the bumper, bumper mounting surface, and sensor retainers before continuing with normal diagnosis. After the detected cause has been addressed the vehicle must be driven at speed greater than 40 km/h (25 MPH).
- Rear Attached Object Detected – An object has been determined to be attached to the rear of the vehicle. Common items such as a hitch receiver, trailer, or a bicycle rack may cause this concern. Additionally, damage to the rear of the vehicle or a misaligned sensor may cause this concern. If the vehicle is damaged in a manner that causes the sensor to detect the bumper itself, the parking assist control module will interpret this as an attached object and disable the system. Carefully inspect the bumper, bumper mounting surface, and sensor retainers before continuing with normal diagnosis. After the detected cause has been addressed the vehicle must be driven at speed greater than 40 km/h (25 MPH).
- Front And Rear Attached Object Detected – An object has been determined to be attached to the front and rear of vehicle.
- Parking Assist Alarm Sensor Blocked – One of the following conditions may be present:
  - One or more of the sensors may be blocked by snow, mud, ice, or other debris. This might happen after going through a car wash in cold weather.
  - Silicone insulator surrounding sensor maybe missing, cut, or twisted.
  - Improperly installed sensor, sensor maybe be crooked due to a tight wire harness.
  - One or more of the sensors may be scratched or the paint maybe chipped.
  - Excessive paint thickness on a sensor may cause an excessive sensor ring time. When replacing or refinishing a sensor, do not apply an excessive amount of paint or clear coat.
- Haptic Seat Malfunction – A fault exists with the safety alert seat. Check for DTCs.
- Chime Malfunction – A fault exists with the vehicle chime. Check for DTCs.
- Parking Assist Switch Malfunction – A fault exists with the parking assist switch. Check for DTCs.
- Invalid Gear – The vehicle has determine a plausibility fault exists with the transmission range.
- Incorrect Power Mode – The vehicle is in an incorrect power mode for parking assist operation.

Automatic Parking Assist System Operational Checks

The scan tool Automatic Parking Assist Disable History 1–8 data can be used to diagnose a malfunction within the parking assist system or an intermittent concern. The following is a brief description of potential causes which may aid in diagnosis. For each potential issue, perform an appropriate inspect of the component or system and refer to the specific service information subsection related to that system for further diagnosis:

- Automatic Parking Assist Switch Pressed – The automatic parking assist switch has been pressed a second time, aborting the function.
- Automatic Parking Assist Switch Malfunction – The automatic parking assist is stuck closed or has been held down.
- Interrupted by Driver – The Automatic parking assist operation has been aborted by the driver by interfacing with the steering, brake, or accelerator.
- Info Display Control Malfunction – The Automatic parking assist system is not able to provide instructions on the driver information center
- Door Open – A door has been opened.
- Parking Brake Malfunction – A malfunction has been detected in the electric parking brake system.
- Vehicle Dynamics System Status Not Plausible – An implausible scenario between the steering angle sensor, yaw sensor, and lateral/longitudinal accelerometer has been determined.
- Steering Response Malfunction – The steering system has not responded as expected to a steering command.
- Automatic Brake Response Malfunction
- Transmission Response Malfunction – The transmission has not responded as expected to a shift command.
- Automatic Braking Apply Response Not Plausible – An implausible scenario between a brake apply command and vehicle deceleration has been determined.
- Vehicle Movement Detected During Brake Applied Request – Vehicle movement has occurred while the brakes are commanded to apply.
- Chime Malfunction – A fault exists with the vehicle chime. Check for DTCs.
- Wheel Speed Direction Signal Invalid – Identified wheel directional travel does not match intended travel direction.
- Vehicle Speed Invalid – The vehicle is unable to determine the vehicle speed.
- Attached Object Detected – An object has been determined to be attached to the front and rear of vehicle.
- Parking Maneuver Vehicle Speed Exceeded – The vehicle has exceeded the maximum allowable speed for the parking maneuver.
- Vehicle Speed Too High to Search for a Parking Space – The vehicle has exceeded the maximum allowable speed to search for a suitable parking spot.
- Number of Parking Maneuvers Exceeded – The maximum number of parking attempts for a single maneuver has been exceeded.
- Parking Space Too Small – The vehicle has determined the space for the attempted parking maneuver is too small.
- Vehicle Not Following Parking Space Path – The vehicle is unable to follow the intended path of the parking maneuver.
- Yaw Angle Above Threshold – The expected yaw angle for the parking maneuver has been exceeded.
- Steering Angle Deviation Above Threshold – The expected steering angle for the parking maneuver has been exceeded.
- Object Detected on Both Sides of Vehicle – An object has been detected on both the left and right side of the vehicle.
- Object Detected in Alert Zone – An object has been detected in the vehicle’s path.
- Sensor Blocked – One of the following conditions may be present:
  - One or more of the sensors may be blocked by snow, mud, ice, or other debris. This might happen after going through a car wash in cold weather.
  - Silicone insulator surrounding sensor maybe missing, cut, or twisted.
  - Improperly installed sensor, sensor maybe be crooked due to a tight wire harness.
  - One or more of the sensors may be scratched or the paint maybe chipped.
  - Excessive paint thickness on a sensor may cause an excessive sensor ring time. When replacing or refinishing a sensor, do not apply an excessive amount of paint or clear coat.
- Steering Angle Signal Invalid – The vehicle is unable to determine the steering angle.
- Invalid Gear – The vehicle has determine a plausibility fault exists with the transmission range.
- Incorrect Power Mode – The vehicle is in an incorrect power mode for parking assist operation.

Remote Functions

Schematic and Routing Diagrams

Remote Function Schematics (Keyless Entry - Active)

6613529

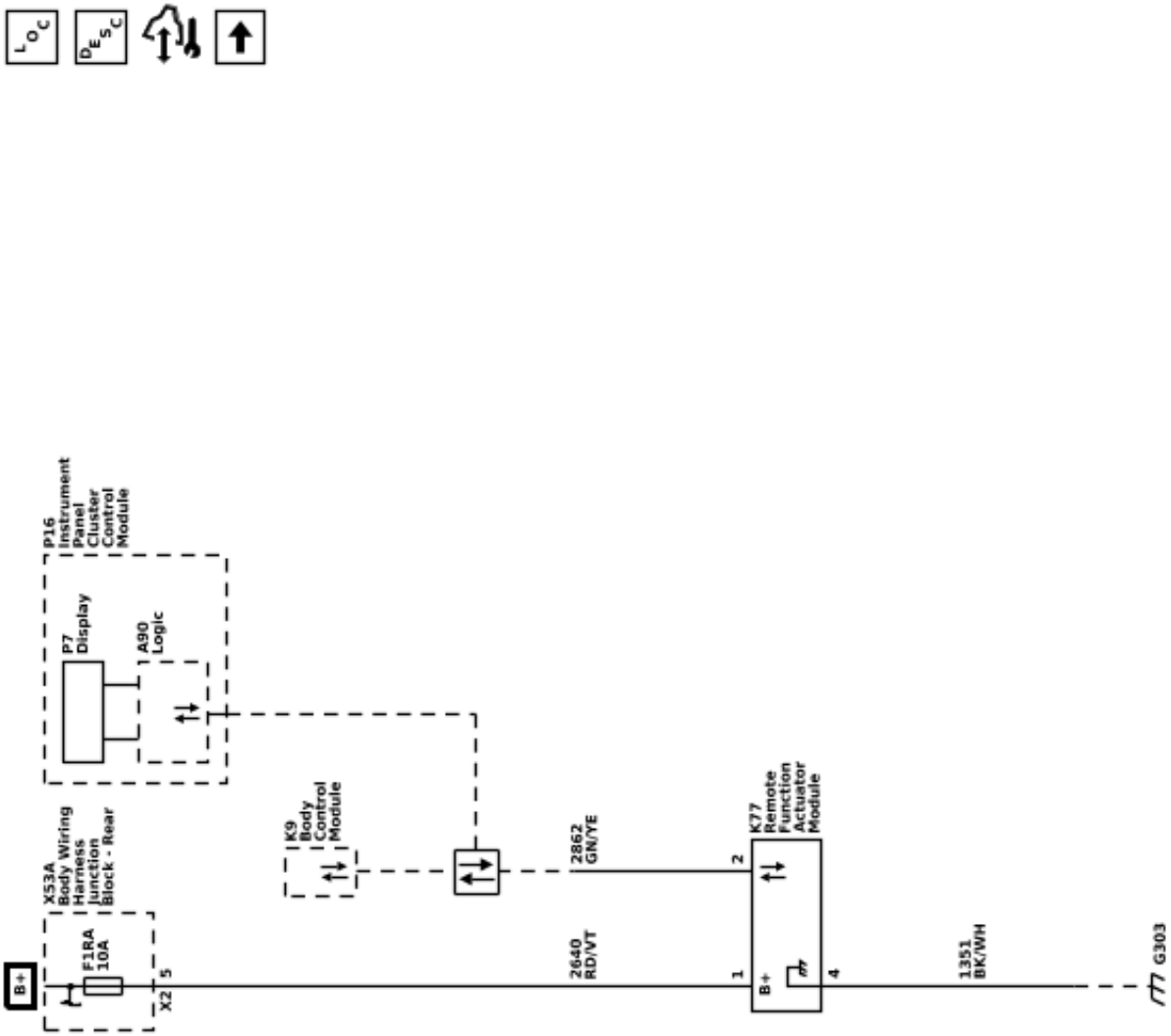

Remote Function Schematics (Keyless Entry - Passive and Keyless Start)

6613530

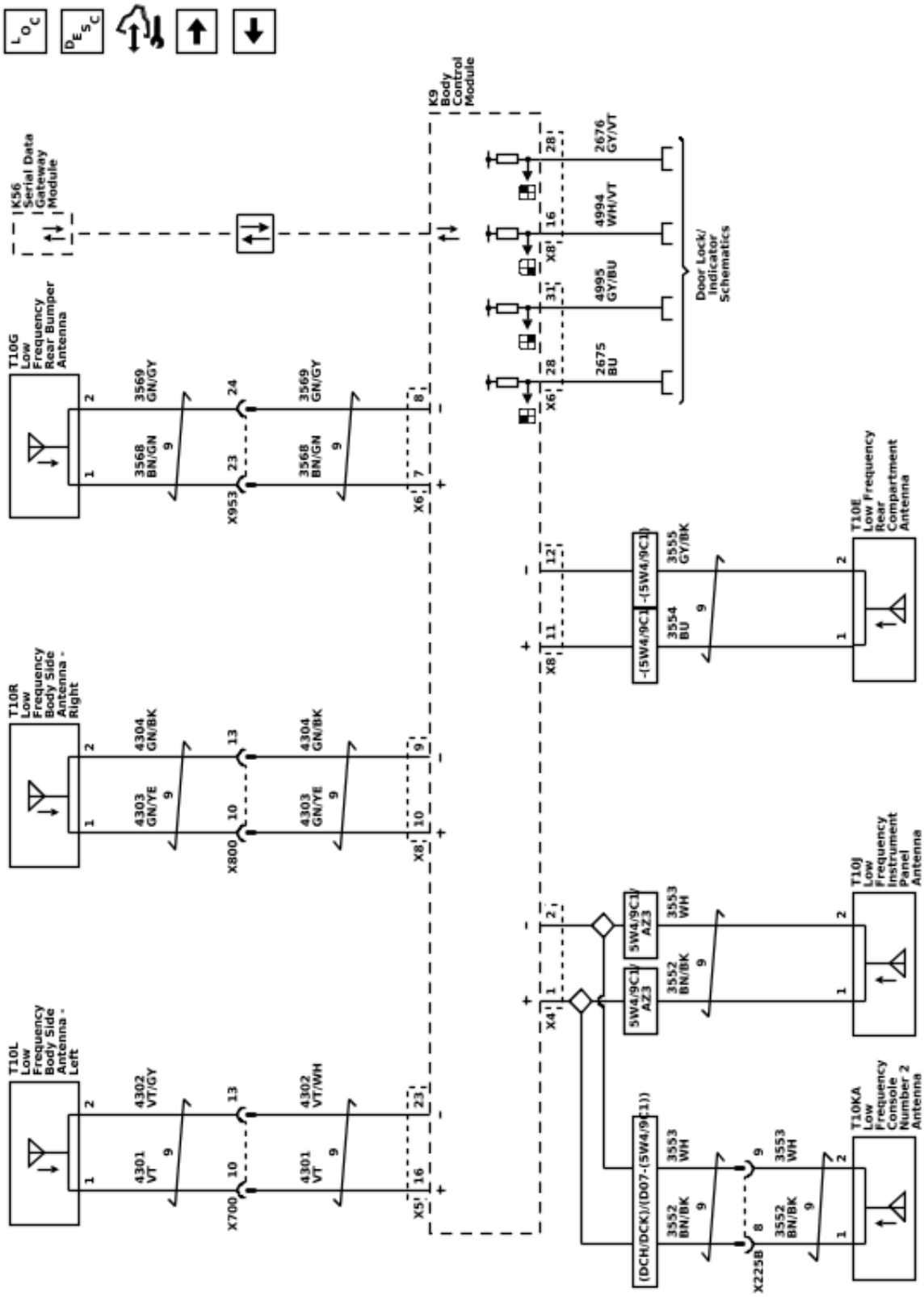

Remote Function Schematics (Keyless Entry - Virtual Key 1 of 3 (BOR / BOY))

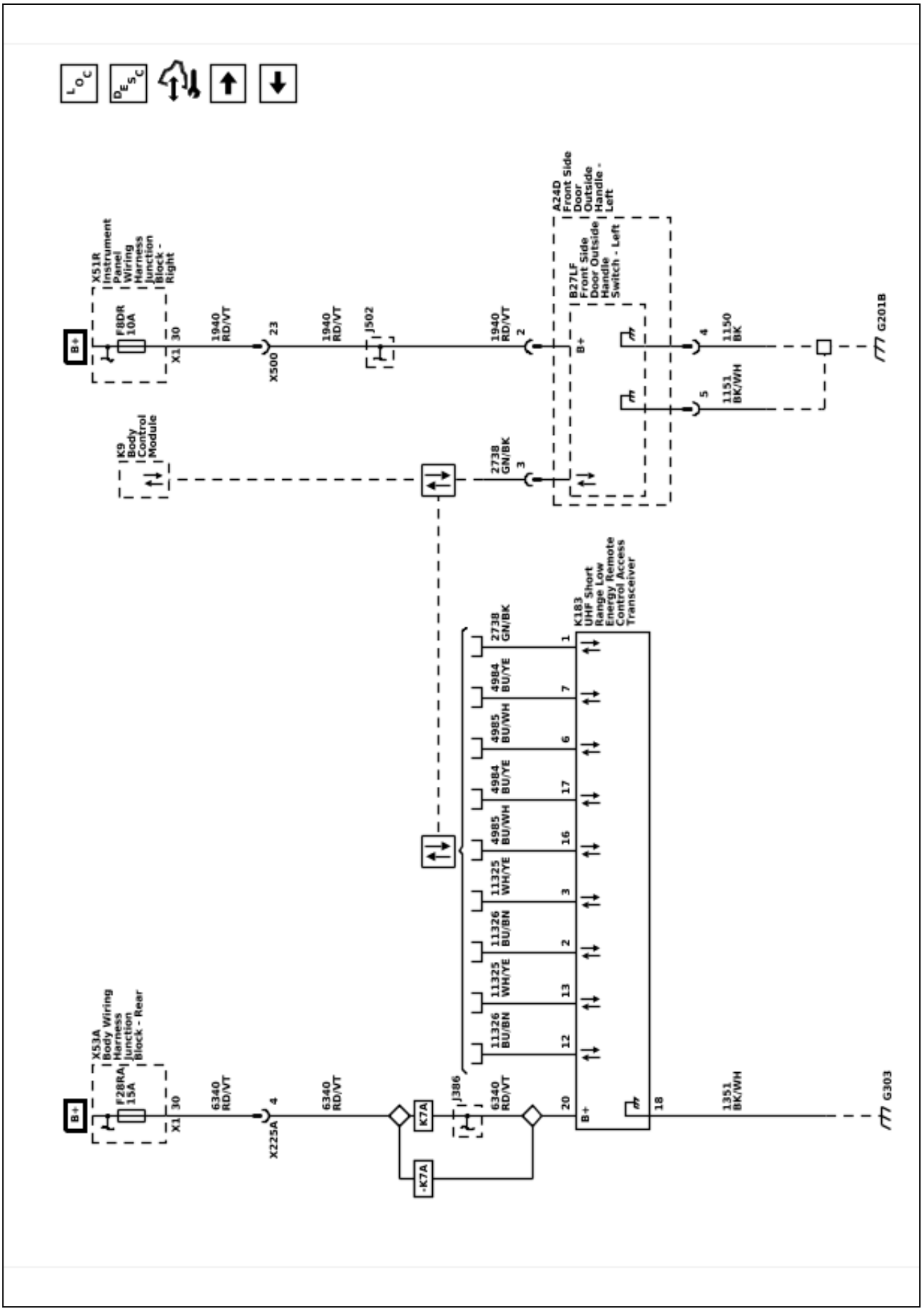

6620603

Remote Function Schematics (Keyless Entry - Virtual Key 2 of 3 (BOR / BOY))

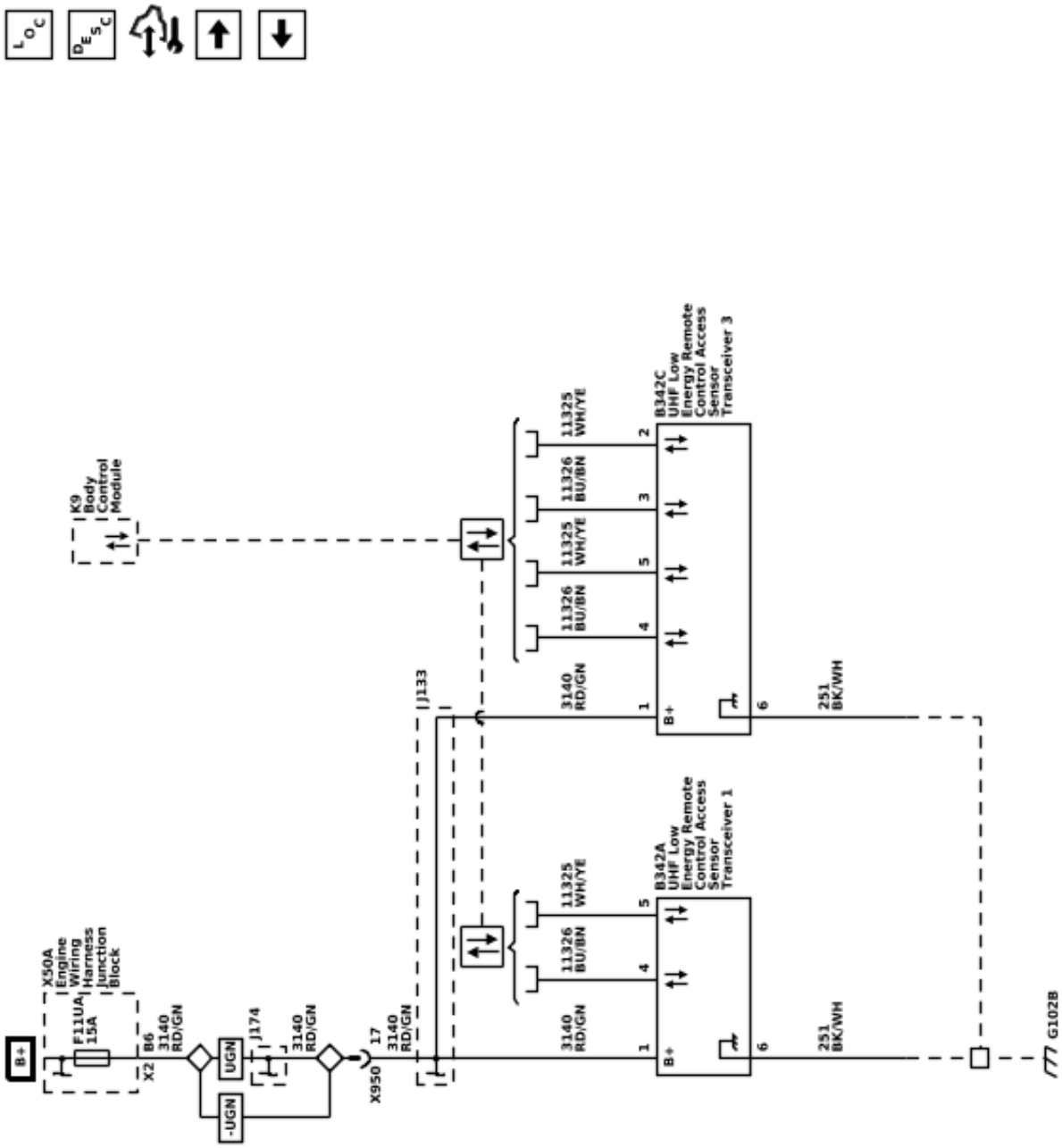

Remote Function Schematics (Keyless Entry - Virtual Key 3 of 3 (BOR / BOY))

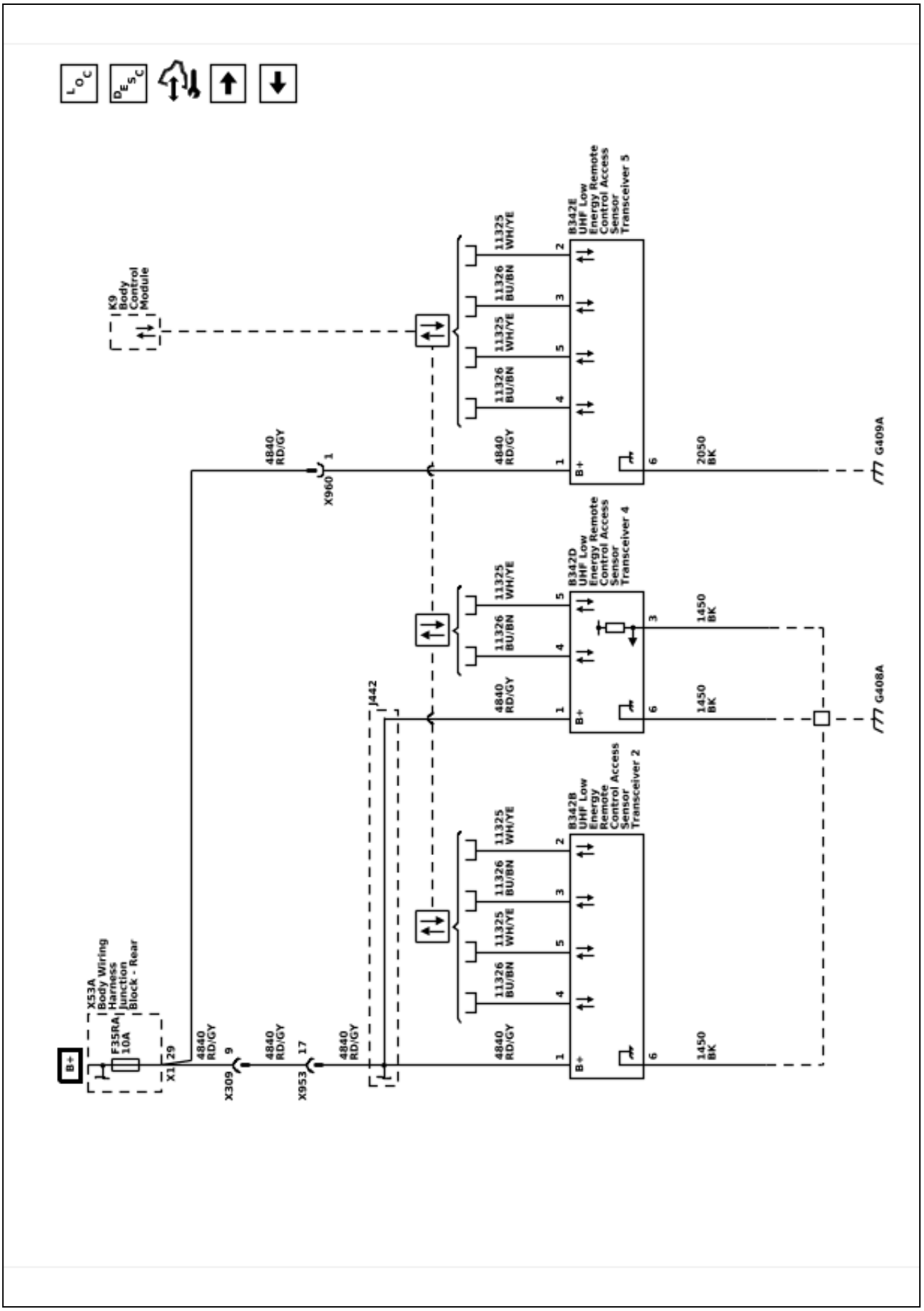

6620604

6613531

Remote Function Schematics (Garage Door Opener (UG1))

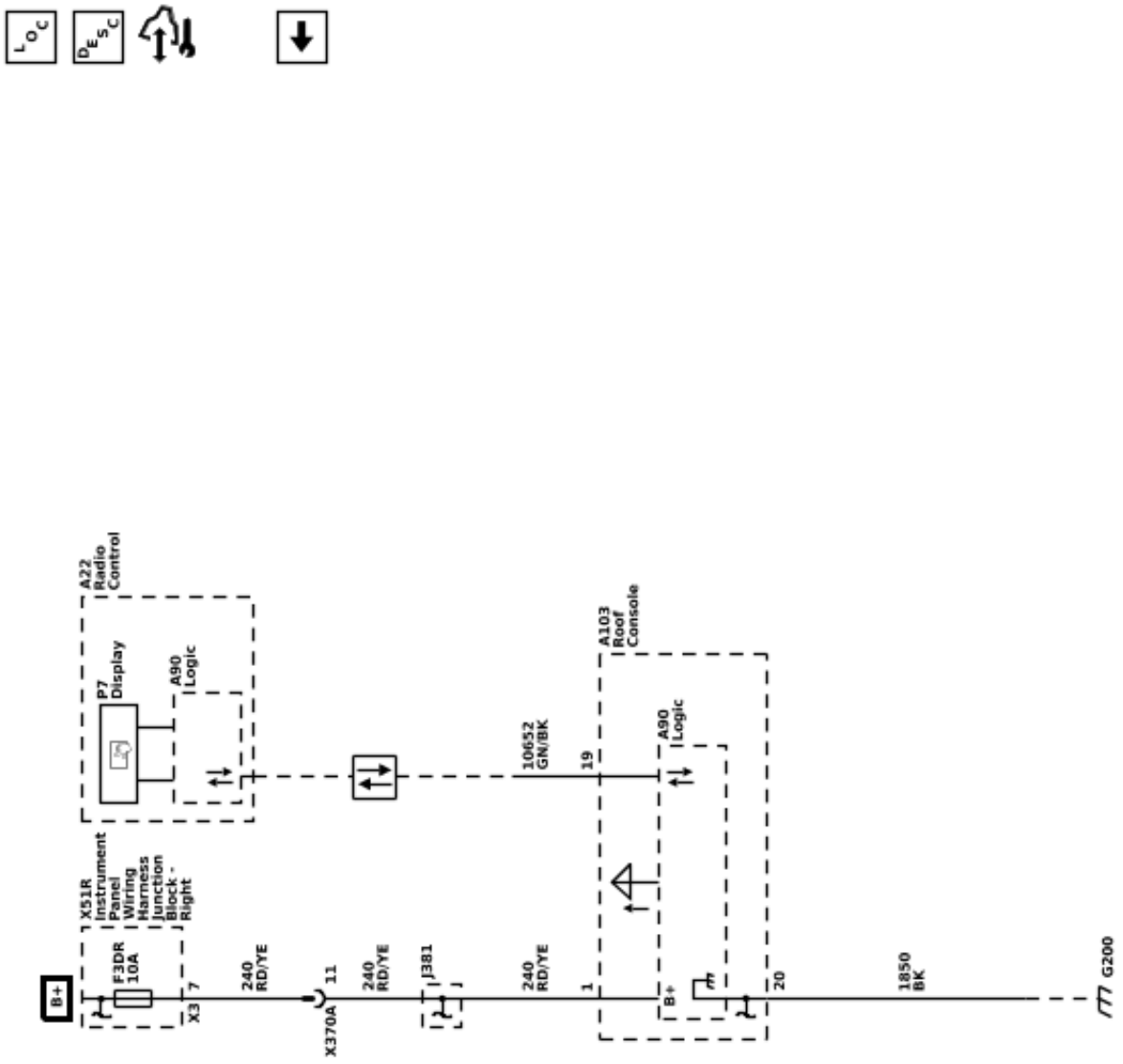

Description and Operation

Garage Door Opener Description and Operation

The garage door opener is fixed and rolling code capable. Rolling code is a system that allows the code that the customers receiver receives from the garage door opener to change every time the garage door opener is used within operating range of the receiver. Rolling code programming requires the customer to push a learn/program button on the garage door opener receiver at their home. This button is usually located on the receiver unit under a cover (light cover) on one end of the unit. The customer must follow the garage door opener manufacturers instructions to program/learn the receiver to accept the Universal Home Remote System as an authorized opener for their unit . When the receiver and the garage door opener are initially programmed together, a code is established and a new code is created for every new transmission. The software in the receiver recognizes the garage door opener and accepts the new code.

The garage door opener is compatible with most, but not all types and brands of transmitters.

The garage door opener is a transmitter operating between 288–434 MHz. The power and range of the transmitter is limited to comply with laws governing the generation of radio frequency interference. The transmitter is programmed by the user to accept the signal generated by the user's transmitters.

The garage door opener has 3 buttons that may be programmed for individual transmitter/receiver combinations to control up to 3 garage door openers, security gates, lighting systems, etc. Each button represents a transmitter code section of the transmitter, which operates separately from any other button, and may be considered a separate transmitter. Operation consists of simply pressing a button to activate the corresponding transmitter.

The garage door opener does not need any programming after it is replaced. However, for the opener function it must be programmed to the customer’s garage door or other devices such as a gate. The programming can only be performed at the device being programmed, it cannot be programmed at a service facility. Instructions for programming are listed in the Garage Door Opener Malfunction document in a Diagnostic Aid.

Note: Do not use the garage door opener (GDO) with any garage door opener that does not have the stop and reverse safety feature. This includes any garage door opener model manufactured before April 1, 1982.

Keyless Entry System Description and Operation

Keyless Entry System Description and Operation – Active

The keyless entry system is a vehicle entry device. The keyless entry system is used in conjunction with the door locks to unlock the vehicle. Keyless entry will lock/unlock a door or open the rear compartment lid when a corresponding button on the keyless entry transmitter is pressed. This is accomplished by the transmitter sending a radio frequency to the remote control door lock receiver that has a direct link to the body control module (BCM). The BCM interprets the signal and activates the requested function or requests the appropriate ECU to activate the function via a serial data message. A low transmitter battery or radio frequency interference from aftermarket devices, such as 2-way radios, power inverters, computers, etc., may cause a system malfunction. High radio frequency traffic areas, such as gas stations that use pay-at-the-pump radio frequency transponders, may also cause interference that could lead to a malfunction. Keyless entry allows you to operate the following features:

- Door lock/unlock
- Rear compartment lid release
- Illuminated entry lamps
- Panic alarm/vehicle locator
- Remote vehicle start
- Passive keyless entry able/disable
- Automatic window express down, if equipped
- Automatic window express up, if equipped
- Automatic power mirror folding/unfolding, if equipped

Keyless Entry System Description and Operation – Passive

Passive keyless entry allows entry to a locked vehicle without pressing any buttons on the keyless entry transmitter. The passive entry system uses low frequency antennas in several different areas on the vehicle to determine the location of the transmitter. When passively opening a locked door or the rear compartment, you must have a programmed transmitter with you in your pocket, purse, or briefcase within a one meter range.

When an exterior door handle button is pressed or the rear compartment touch pad is pressed, the body control module activates the low frequency antenna which sends out a challenge to the keyless entry transmitter. Because of the low frequency, communication range is limited. The antenna will emit the challenge in a one meter range. The transmitter must be within this range to receive the challenge. The transmitter receives this challenge and emits it's response as an RF message, which is received by the remote control door lock receiver. If the response is correct, entry into the vehicle will be allowed.

As a customer convenience feature, the keyless entry system will notify the driver if the transmitter has been left in the vehicle after exiting by chirping the vehicle horn three times and displaying a message on the DIC. This may be turned off using vehicle personalization. Also, if the transmitter is left in the vehicle after the central door lock switch has been used to lock the vehicle, the driver door will remain unlocked after exiting the vehicle. This is intended to prevent locking the transmitter in the vehicle and being unable to access it.

Keyless Entry System Description and Operation – Keyless Start

The keyless start portion of the keyless entry system allows vehicle starting, having only the transmitter as your key. The keyless start system uses low frequency antennas in three different locations on the vehicle to determine the location of the transmitter. Multiple antenna are used to ensure complete coverage of the vehicle interior and rear compartment. When using the keyless start system, a programmed transmitter must be in the vehicle's interior, in the driver's pocket, purse, or briefcase.

When the ignition mode switch is pressed, the low frequency antennas emit a challenge to the keyless entry transmitter. The transmitter receives this challenge and emits it's response as an RF message, which is received by the remote control door lock receiver. If the response is correct, vehicle starting will be allowed. If RF communication is interrupted, a “No Remote Detected” message will be displayed on the DIC. In these cases, the transmitter can be placed in the transmitter pocket located in the center console. The immobilizer antenna coil is located directly beneath the transmitter pocket. Placing the transmitter in the pocket will create a low powered coupling between the transmitter and immobilizer antenna, allowing communications to occur and enabling vehicle starting. If the key has been idle the DIC may display “Key In Sleep Mode, Move Key, Then Start”. In this case move the vehicle key to start the vehicle.

The keyless entry system has the following components:

- Keyless entry integrated key/transmitter
- Driver and passenger side antennas
- Driver and passenger door handle switches (part of the door handle assembly)
- Rear fascia antenna
- Immobilizer antenna coil (front console antenna function)
- Rear console antenna
- Trunk antenna (rear compartment)
- Body control module (BCM)
- Remote control door lock receiver

Keyless Entry Transmitters

By operating any of the exterior door handle buttons or the start/stop switch, a nearby transmitter is challenged by a keyless entry antenna. The transmitter will send an RF response to the remote control door lock receiver, which communicates with the BCM. The BCM will interpret this communication and either allow or deny vehicle entry or starting.

Side Antennas

The keyless entry side antennas are used to transmit low frequency communications to the keyless entry transmitters.

The keyless entry side antennas are located in the driver and passenger body sides. The antennas are controlled by the body control module. When the exterior door handle button is pressed, the respective antenna will send out a challenge to the keyless entry transmitter, which begins the passive entry communications.

Rear Fascia Antenna

The rear fascia antenna is used to transmit low frequency communication to the keyless entry transmitters for entry to rear compartment.

The rear fascia antenna is located behind the rear fascia. The antenna is controlled by the body control module. When the rear compartment touch pad is pressed, the antenna sends out a challenge to the keyless entry transmitter, which begins the passive entry communications.

Immobilizer Coil Antenna

This antenna is located in the front of the center console.

The Immobilizer antenna coil is used for vehicle starting functions and for learning vehicle keys. When the ignition mode switch is pressed, the antenna is energized or "pinged". This emits a low frequency challenge signal that is received by the keyless entry transmitter. The transmitter will then reply to this challenge with a response and, if correct, vehicle starting will occur. If the transmitter battery is dead, weak, or the RF signal is being interrupted, the transmitter may be placed in the pocket to create a low powered coupling between the transmitter and immobilizer coil antenna, allowing communications to occur and enabling vehicle starting.

Rear Console Antenna

This antenna is located in the rear of the center console.

The rear console antenna is used for vehicle starting functions. When the ignition mode switch is pressed, the antenna is energized or "pinged". This emits a low frequency challenge signal that is received by the keyless entry transmitter. The transmitter will then reply to this challenge with a response and, if correct, vehicle starting will occur.

Rear Compartment Antenna

This antenna is located near the center of the rear compartment area.

The rear compartment antenna is used for vehicle starting functions. When the ignition mode switch is pressed, the antenna is energized or "pinged". This emits a low frequency challenge signal that is received by the keyless entry transmitter. The transmitter will then reply to this challenge with a response and, if correct, vehicle starting will occur.

OnStar® Remote Link

A vehicle operator may have the ability to perform some of the keyless entry functions using applications on personal devices such as smart phones. Refer to *OnStar Description and Operation 3-21*.

Body Control Module (BCM)

The BCM is a multi-function module that performs the following functions:

- Receive and authenticate active transmitter and keyless start/entry signals from the remote control door lock receiver
- Determines the function requested by the transmitter signal
- Performs the function requested by the transmitter signal
- Activating vehicle antennas for passive keyless entry functions
- Activating vehicle antennas for keyless start functions
- Backup control for the ECM accessory wakeup and the run/crank relay
- If equipped, controls the electronic steering column lock
- Receiver of the exterior door handle switch inputs and door open switch (not the door ajar switch)
- Ignition mode switch monitoring

Unlock Driver Door Only – Active

Momentarily press the transmitter UNLOCK button in order to perform the following functions:

- Unlock only the driver door or all doors, if enabled through personalization
- Illuminate the interior lamps for a determined length of time, or until the ignition is turned ON
- Flash the exterior lights, if enabled through personalization
- Disarm the Content Theft Deterrent (CTD) system
- Deactivate the CTD system when in the alarm mode

Unlock All Doors – Second Operation – Active

Momentarily press the transmitter UNLOCK button a second time, within 5 seconds of the first press, to perform the following function:

Unlock the remaining doors

Unlock Driver Door Only – Passive

If enabled through personalization, approach the driver door with a valid keyless entry transmitter and press the door handle button to perform the following functions:

- Unlock and open only the driver door
- Disarm the CTD system, if equipped
- Deactivate the CTD system when in the alarm mode

Unlock All Doors – Passive

Approach any non driver door (front or rear) or, if enabled through personalization, the driver door with a valid keyless entry transmitter and press the door handle button to perform the following functions:

- Unlock all vehicle doors
- Disarm the CTD system, if equipped
- Deactivate the CTD system when in the alarm mode

Lock All Doors – Active

Press the transmitter LOCK button to perform the following functions:

- Lock all vehicle doors
- Immediately turn off the interior lamps
- Flash the exterior lights, if enabled through personalization
- Chirp the horn, if enabled through personalization
- Arm the CTD system

Lock All Doors – Passive

Exit the vehicle (with ignition off) with the keyless entry transmitter to automatically perform the following functions, if equipped.

- Lock all vehicle doors after a delay
- Flash the exterior lights, if enabled through personalization
- Chirp horn, if enabled through personalization
- Arm the CTD system

When all doors are closed, they can also be locked from the exterior by operating a front door handle button or touch pad while having a valid transmitter within range. Vehicles equipped with a rear door button can also lock all doors from the rear doors.

Rear Compartment Lid Release – Active

If the vehicle transaxle is in PARK or NEUTRAL, a double press of the transmitter rear compartment release button will open the rear compartment lid.

Rear Compartment Lid Release – Passive

Approach the rear of a locked vehicle with a valid keyless entry transmitter. Press the rear compartment lid release touch pad. The rear compartment lid will open.

Vehicle Locator/Panic Alarm/Active

A single press of the panic button performs the following functions. Some functions may be dependent on personalization settings:

- Pulses the horn three times
- Flashes the exterior lamps three times

A press and hold of the panic button performs the following functions:

- Pulses the horn and flashes the parking lamps for 30 second or until the following conditions occur:
  - The panic button is pressed
  - The ignition switch is turned to the RUN position with a valid key

Remote Vehicle Start/Active

The remote vehicle start function allows engine starting while not in the vehicle. It also allows the vehicle HVAC system and other vehicle systems to enable, providing a comfortable vehicle upon entry. The remote vehicle start sequence begins by pressing and releasing the remote vehicle start button on the keyless entry transmitter twice. The turn signal lamps will illuminate to indicate the vehicle has received the remote start request. Each time a remote vehicle start is performed, the vehicle doors are locked, however they may then be unlocked/locked with the transmitter at any time. Once activated, the engine is allowed to run for 15 minutes. The remote start operation can be repeated as many times as desired up to a total run time of 30 minutes. The remote vehicle start event may be cancelled at any time by pressing only the remote vehicle start button on the transmitter or by entering the vehicle and turning ON the hazard lamps.

Hood Ajar Switch/Active

The hood switch provides status of the hood to the BCM for remote vehicle start purposes. The switch is integrated into the hood latch assembly. The hood ajar switch provides 2 separate inputs to the BCM. These separate inputs allow the BCM to actively monitor for a hood ajar switch fault.

Remote Vehicle Start Circuit Description/ Active

The BCM receives a signal from the keyless entry transmitter indicating a remote vehicle start request. The BCM and ECM use the following inputs to verify the system is ready to enable a remote vehicle start event:

- Vehicle is not in valet mode
- Vehicle is in park
- Keyless entry transmitter is not in the vehicle
- The hood is closed

- The hazard switch is OFF
- Vehicle power mode is OFF
- The malfunction indicator lamp (MIL) is not commanded ON by the ECM
- Remote start timer does not equal 0 (the 30 minute maximum time has not been used)

When the BCM determines all conditions meet those required for a remote vehicle start event, a message is sent via serial data to the ECM. While the ECM is in remote vehicle start mode it will cut fuel to the engine if any of the following monitored conditions occur:

- Vehicle speed is greater than 0
- Transmission is not in P
- Excessive engine coolant temperature
- Low oil pressure
- Engine crank time is greater than 30 seconds
- Excessive engine speed
- Accelerator pedal position too high
- Immobilizer system indicates a theft attempt

If any conditions prevent a remote start or cause a remote start operation to be cancelled there is a record of the cause in the scan tool.

Keyless Entry Personalization

Vehicle lock/unlock functions and remote vehicle start settings may be personalized for the vehicle. This includes the capability of turning the passive entry system completely off. For functional descriptions and programming instructions, refer to the vehicle owners manual.

Seat Belts

Schematic and Routing Diagrams

6613532

Seat Belt Schematics (Front Seat Belt Switches and Indicator)

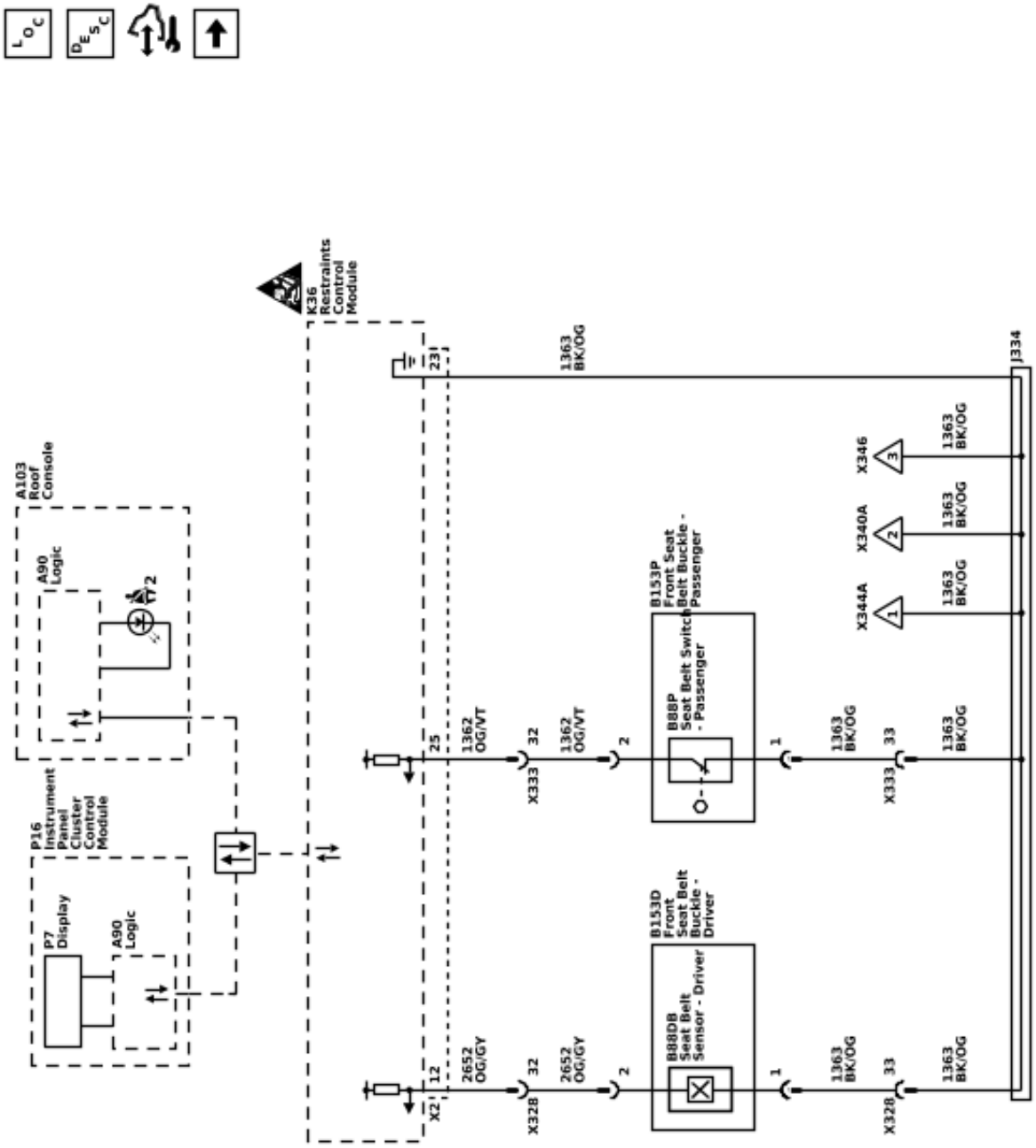

6613533

Seat Belt Schematics (2nd and 3rd Row Seat Belt Switches (UH5 / UH6))

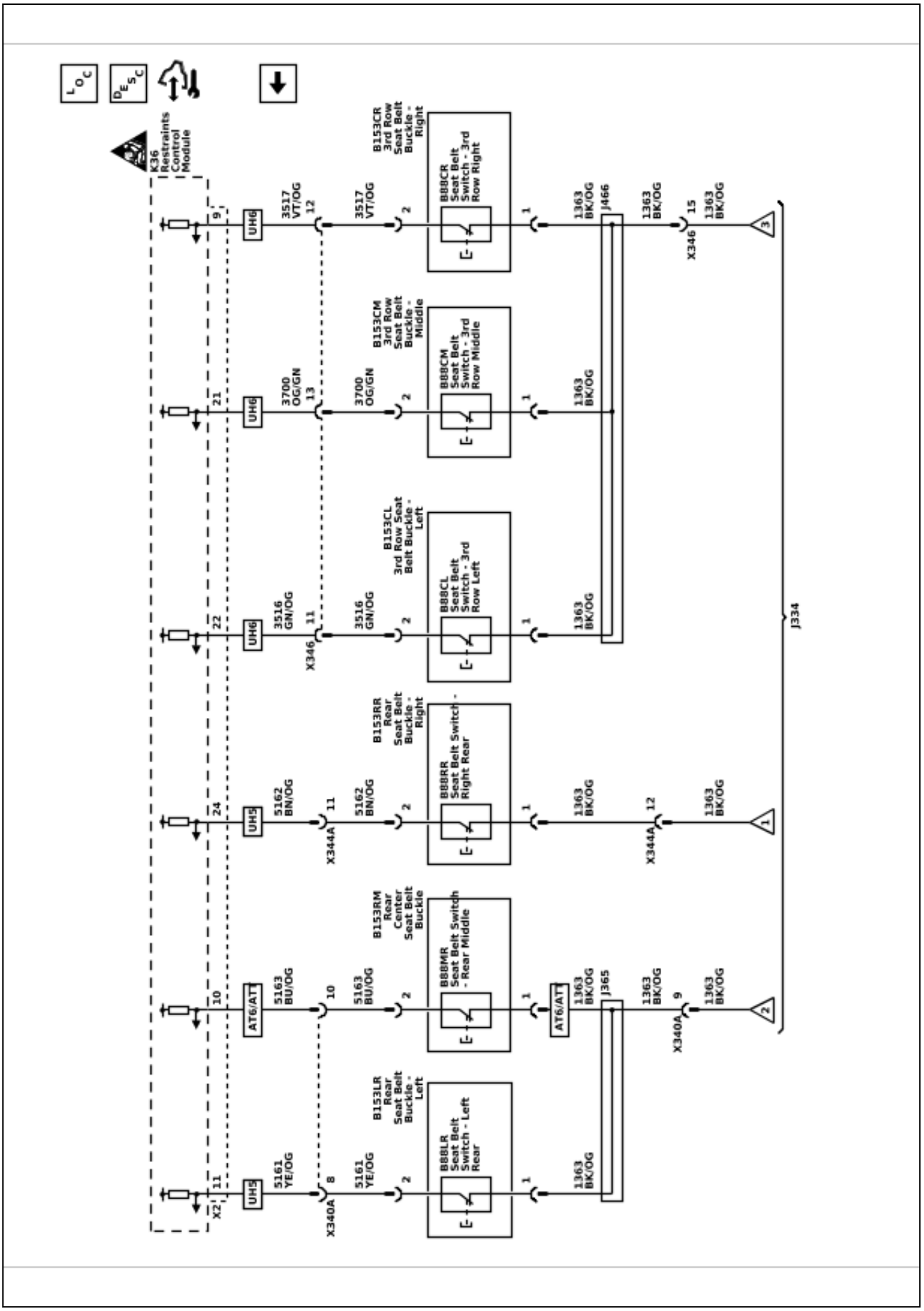

Description and Operation

Seat Belt System Description and Operation

Restraint System

The primary means of occupant restraint are the front and rear seat belts. Seat belts help to keep the occupants inside the passenger compartment and gradually reduce the impact forces during the following events:

- Frontal impact
- Rear impact
- Side impact
- Rollover event

All seat belt retractors have emergency locks. The retractors remain unlocked during normal operation and under normal driving conditions to allow free movement of the upper body of each occupant. The seat belt webbing is locked into position by a pendulum, which causes a locking bar to engage a cog on the spool of the retractor mechanism, when the following conditions occur:

- Rapid extraction of the seat belt webbing from the retractor
- Abrupt change in vehicle velocity
- Operation of the vehicle on a steep slope

The seat belts have an automatic locking (cinch) feature. The cinch feature is activated when the seat belt webbing is completely extended from the retractor. It prevents the webbing from extending beyond the position at which it can retract. Use of the cinch feature is recommended for securing a child seat. The cinch feature may be cancelled by allowing the webbing to wind back completely into the retractor. After the cinch feature is cancelled, the webbing is unlocked. This vehicle is also equipped with a Supplemental Inflatable Restraint (SIR) system. Refer to *Supplemental Inflatable Restraint System Description and Operation 7-79*.

Motorized Seat Belts

A motorized seat belt is a seat belt with a motor coupled to the shoulder belt retractor. The motor performs a reversible, pretightening action (retraction) to reduce the slack in the seat belt. The motorized seat belt provides the driver and passenger a sense of safety and, in the case of severe braking or a crash, more quickly couples the occupant to the vehicle, enhancing the safety to the occupant.

Motorized seat belts monitor vehicle information to determine when to perform each of the following retractions

- Full retraction for such situations but not limited to: panic braking and or skidding
- Dynamic support for lateral and longitudinal dynamics
- Slack removal when the vehicle speed above enable speed

Preconditions for motorized seat belt retractions

- Seat belt buckle is latched
- Vehicle speed greater than or equal to 25 kph (16 mph)
- All messages on serial data are received as valid

Triggers that may cause motorized seat belt retractions

- Emergency Braking
- Sudden Emergency / Panic Braking
- High Vehicle Deceleration Detection
- Ice Braking Detection
- Oversteer and Understeer

Motorized seat belt inputs

- Vehicle Power Mode
- Transmission Gear
- Wheel Speeds
- Vehicle Acceleration
- Accelerator Pedal Position
- Steering Wheel Angle and Gradient
- Yaw Rate and Lat/Long Acceleration
- Brake Pedal Position, Gradient, Pressure, Initial Travel
- Vehicle Stability

Motorized seat belt output signals

- Driver information center message – motorized seat belt Failed “Service Automatic Seatbelt Tightening”
- Driver information center message – motorized seat belt Unavailable “Automatic Seatbelt Tightening Unavailable”

Motorized seat belt retractions are inhibited when seat belt unbuckled.

Driver and passenger motorized seat belts operate independently.

Front Seat Belt System

The front seat belt system includes the driver and passenger seat belts, seat belt reminder indicators, retractors, and anchor pretensioners. They are all part of the SIR system, refer to *Supplemental Inflatable Restraint System Description and Operation 7-79* . The driver seat belt reminder indicator is controlled by a switch in the driver seat belt buckle. The passenger seat belt reminder indicator is controlled by a switch in the passenger seat belt buckle and the Restraint Occupant Classification System Module. For more on the Restraint Occupant Classification System Module, refer to *Supplemental Inflatable Restraint System Description and Operation 7-79*. When the vehicle is on, the seat belt reminder indicator and tone alarm will operate in the following cases:

- The driver seat belt is unbuckled.
- The passenger seat belt is unbuckled while the seat is occupied.

Rear Seat Belt System

The rear seat belt system includes the following components:

- The rear seat belt retractor located at the wheel-house panel and attached to the floor panel.
- The rear seat belt buckles and the center seat belt buckle attached to the seat.

Child Seat Restraint System

Warning: A child in a rear-facing child restraint can be seriously injured if the front passenger air bag inflates, because the back of a rear-facing child restraint would be very close to the inflating air bag. NEVER use a rear-facing child restraint in this vehicle. If a forward-facing child restraint is suitable for your child, ALWAYS move the front passenger seat as far back as it will go and then install the child restraint. Be sure the child restraint position does not conflict with any additional requirements provided by the manufacturer. For more information, refer to the vehicle owner's manual and the instructions that came with the child restraint.

All vehicles are equipped with a dual-mode type retractor with emergency and automatic locking features. The automatic locking feature is for the restraint of a child seat. The child seat can be secured by pulling the seat belt all the way out to lock it, then tightening the seat belt around the child seat. If the child seat has a top strap, the child seat should be anchored. This applies to the seats designed with the top strap provision and for the vehicles sold in Canada. To ensure the correct top strap angle, the child seat is only to be used at the seating position for which the top strap anchor is installed. The child seat should be installed and secured according to the manufacturer's directions.

Seat Belt Reminder Indicators

There is a driver seat belt reminder indicator located on the instrument cluster and a passenger seat belt reminder located on the overhead console. There also may have a rear seat belt reminder located in the instrument cluster. The state of the seat belt reminder indicators is determined by the Restraints Control Module. The seat belt reminder indicator illuminates under the following conditions:

- The Restraints Control Module sends the status of the driver seat belt to the instrument cluster via serial data. The passenger seat belt status is sent to the driver information center via serial data. The rear seat belt status is sent to the driver information center via serial data. If any of the seat belts are unfastened, the instrument cluster will send a message requesting a chime sound to be turned ON after a system check.

Supplemental Restraints

Schematic and Routing Diagrams

SIR Schematics (Module Power, Ground, Serial Data, Controls, Indicators, and Subsystem References)

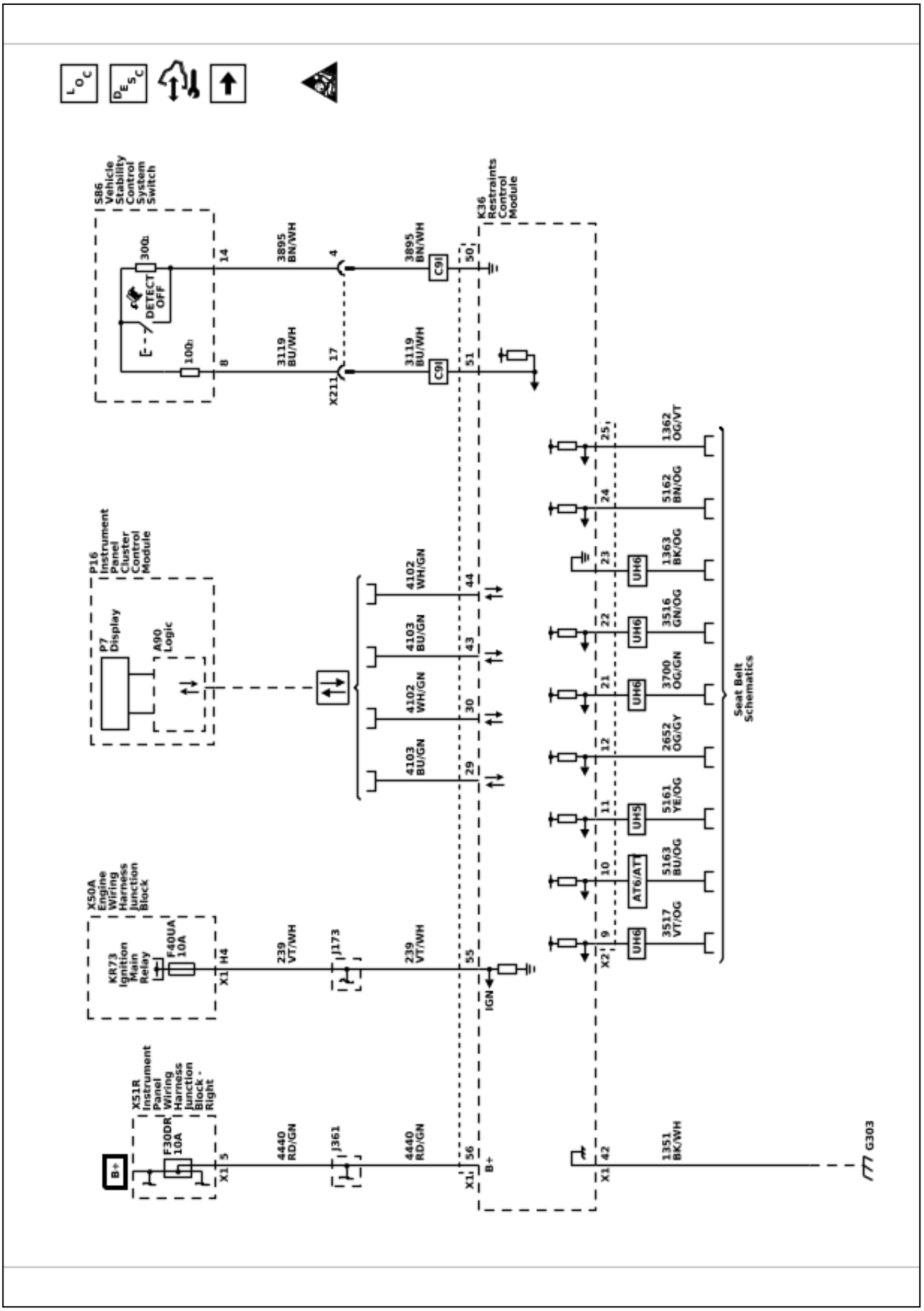

6613534

SIR Schematics (Passenger Presence Module)

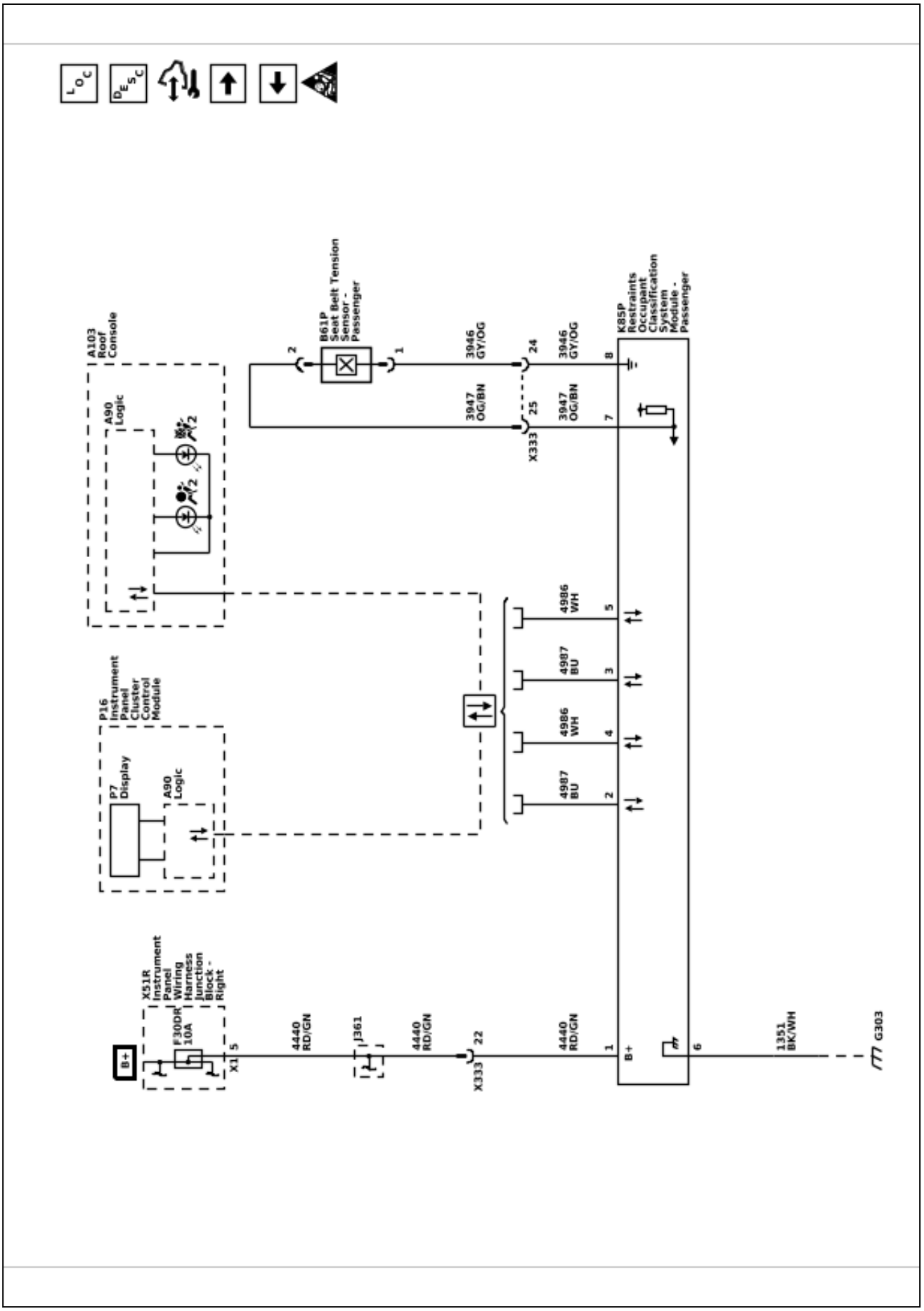

SIR Schematics (Frontal Impact Sensing and Deployment)

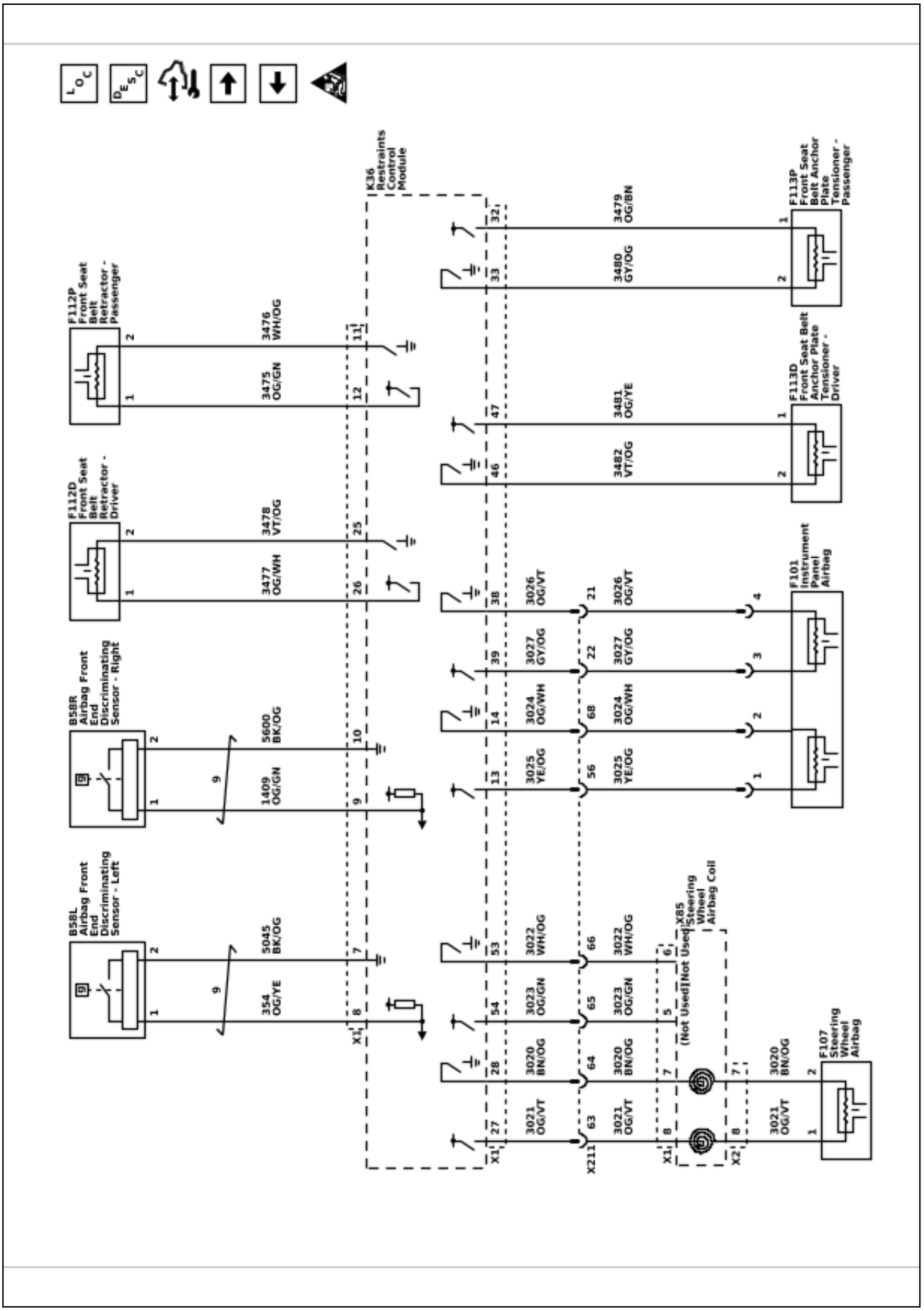

SIR Schematics (Side Impact Sensing and Deployment)

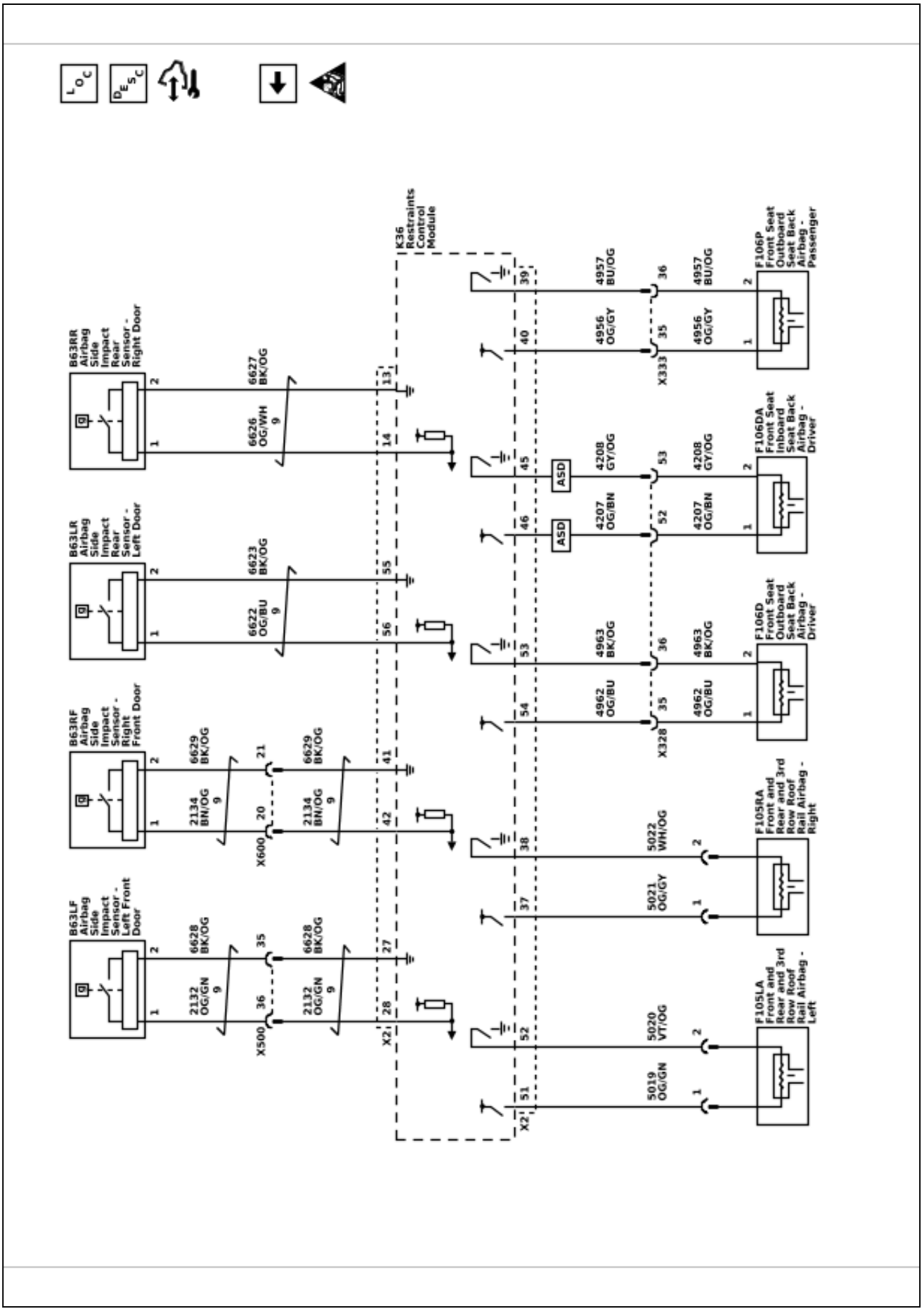

Description and Operation

Supplemental Inflatable Restraint System Description and Operation

The supplemental inflatable restraint (SIR) system, comprised of the Restraints Control module (RCM), impact sensors, Airbags, Restraint Occupant Classification System Module, and seat belt Pretensioners, supplements the protection offered by the seat belts. The RCM determines the severity of a collision using data collected from impact sensors located at strategic points on the vehicle. The RCM processes the information provided by the sensors to provide the safest combination of Airbag and pretensioner deployment. The RCM will deploy the Airbags and Pretensioners if it detects a collision of sufficient force. If the force of the impact is not sufficient to warrant Airbag deployment, the RCM may still deploy the seat belt Pretensioners. The RCM contains a sensing device that translates vehicle acceleration to an electrical signal. The RCM compares these signals to the threshold values stored in memory. If the signals exceed the stored threshold value, the RCM will determine the severity of the event and may deploy restraints. The RCM continuously monitors the deployment loops and electrical components for malfunctions. Upon detection of a circuit malfunction, the RCM will set a DTC and illuminate the SIR system Airbag indicator.

Note: The SIR System may be active up to 30 seconds after the ignition transitions to OFF.

The supplemental inflatable restraint system utilizes the following components:

- Restraints Control Module
- Airbag Indicator
- Airbags
- Seat Belt Pretensioners
- Impact Sensors
- Restraints Occupant Classification System Module (AL0)
- Passenger Airbag Indicator (C99 / AL0)
- Passenger Airbag Disable Switch (C99)
- Seat Belt Tension Sensor
- Seat Belt Indicators
- Event Data Recorder (EDR) Data
- Non-locked event storage overwrite mechanism and over writable event types

Restraints Control Module

The RCM is the control unit for the SIR system. The RCM contains internal sensors in addition to the external impact sensors. The RCM contains sensors which translate vehicle acceleration into an electrical signal, which may be used by other modules. In the event of a collision, the RCM compares the signals from the internal and external impact sensors to a threshold value stored in memory. When the generated signals exceed the stored value, the RCM will cause current to flow through the appropriate deployment loops to deploy the restraints. The RCM records the SIR system status when a deployment occurs and illuminates the SIR system Airbag indicator. The RCM performs continuous diagnostic monitoring of the SIR system electrical components and circuitry when the ignition is ON. If the RCM detects a malfunction, a DTC will set and the RCM will command the instrument cluster to illuminate the SIR system Airbag indicator, notifying the driver that a malfunction exists. If power is lost during a collision, the RCM maintains a limited energy reserve for deployment of the Airbags. It is important when disabling the SIR system for servicing or rescue operations to allow the limited energy reserve to dissipate, which could take up to 2 minutes.

Airbag Indicator

The SIR system Airbag indicator, located in the instrument cluster, is used to notify the driver of SIR system malfunctions and verify that the RCM is communicating with the instrument cluster. When the ignition is turned ON, the RCM is active. The instrument cluster will momentarily turn on the SIR system Airbag indicator. While the indicator is on, the RCM conducts tests on all SIR system components and circuits. If no malfunctions are detected the RCM will communicate with the instrument cluster through the serial data circuit and command the SIR system Airbag indicator to turn OFF. The RCM provides continuous monitoring of the SIR system components and circuits by conducting a sequence of checks. If a malfunction is detected the RCM will set a DTC and command the instrument cluster to illuminate the SIR system Airbag indicator via serial data. The presence of an SIR system malfunction could result in non-deployment of the inflatable restraints or deployment in conditions that normally would not warrant deployment. The SIR system Airbag indicator will remain on for the duration of the malfunction or until the system has been repaired.

Airbags

The vehicle will contain a number of Airbags, depending on vehicle available and optional equipment:

- Steering wheel
- Instrument panel
- Driver seat
- Passenger seat
- Instrument Panel Lower Airbag
- Passenger knee
- Left roof rail
- Right roof rail

To view the locations of the Airbags refer to: [Link target (target-id 62031-) not found] .

Airbags contain a housing, inflatable Airbag, an initiating device, a canister of gas generating material and, in some cases, stored compressed gas. Each Airbag has a discrete deployment loop to supply current and deploy the Airbag. The current passing through the Airbags ignite the material in the canister producing a rapid generation of gas and is some cases, the release of compressed gas. The gas produced from this reaction rapidly inflates the Airbag. Once the Airbag is inflated, it deflates through the Airbag vent holes and/or the bag fabric.

The steering wheel and instrument panel Airbag will either be a dual-stage or a single stage design. A dual-stage Airbag uses two stages of deployment, which varies the amount of restraint to the occupant according to the collision severity. For moderate frontal collisions, the Airbag deploys at less than full deployment which consists of stage 1 of the Airbag. During a more severe frontal collision, a full deployment is initiated which consists of stage 1 and stage 2 of the Airbag.

Seat Belt Pretensioners
The vehicle will contain a number of seat belt Pretensioners, depending on vehicle available and optional equipment:

- Driver – Seat belt anchor
- Driver – Seat belt retractor
- Passenger – Seat belt anchor
- Passenger – Seat belt retractor
- Rear Outboard Left/Right Passenger – Seat belt retractor

To view the locations of the Airbags refer to: [Link target (target-id 62031-) not found] .

The seat belt Pretensioners consist of a housing, seat belt retractor, seat belt anchor, seat belt webbing, initiator, and a canister of gas generating materials. The initiator is part of the seat belt pretensioner deployment loop. When the vehicle is involved in a collision of sufficient force, the RCM causes current to flow through the seat belt deployment loops to the initiator. Current passing through the initiator ignites the material in the canister producing a rapid generation of gas. The gas produced from this reaction deploys the seat belt Pretensioners which removes the slack in the seat belts. Depending on the severity of the collision, the seat belt Pretensioners may deploy without the frontal inflator modules deploying, or they will deploy immediately before the frontal inflator modules deploy.

Impact Sensors
The vehicle will contain a number of impact sensors, depending on vehicle available and optional equipment:

- Front Impact Sensor — Left
- Front Impact Sensor — Right
- Side Impact Sensor — Left Front
- Side Impact Sensor — Right Front
- Side Impact Sensor — Left Middle
- Side Impact Sensor — Right Middle
- Side Impact Sensor — Left Rear
- Side Impact Sensor — Right Rear

To view the locations of the Airbags refer to: [Link target (target-id 62031-) not found] .

The impact sensors contain a sensing device which monitors vehicle acceleration or pressure to detect collisions that are severe enough to warrant Airbag deployment. The impact sensors are not part of the deployment loop, but instead provide input to the RCM.

Restraints Occupant Classification System Module
The Restraints Occupant Classification System Module is used to monitor the type of occupant that is sitting in the front passenger seat and communicate the status to the RCM. The RCM then uses this information to determine whether to enable or suppress the deployment of the passenger instrument panel Airbag. The Restraints Occupant Classification System Module consists of an electronic control module, a sensor mat in the seat, Seat Belt Tension Sensor (if equipped), and a harness.

Passenger Airbag Indicator
The passenger Airbag indicator identifies the status of the instrument panel Airbag. The RCM will momentarily turn on the passenger Airbag indicators after ignition is turned ON. If an occupant is not detected in the passenger seat or the occupant type is not suitable for Airbag deployment, the Restraints Control module will illuminate the passenger Airbag OFF indicator. If an occupant is detected in the passenger seat, the Restraints Control module will illuminate the passenger Airbag ON indicator.

Seat Belt Tension Sensor
The seat belt tension sensor (if equipped) is mounted on the passenger seat belt retractor to measure the seat belt tension. If the shoulder portion of a passenger seat belt is fully extended, the infant car seat restraint locking feature may be engaged, disabling the passenger Airbag.

Passenger Airbag Disable Switch
The passenger Airbag disable switch provides the means to manually disable the ability for the passenger instrument panel Airbag to deploy. The vehicle has a

passenger Airbag status indicator to inform the driver when the passenger Airbag is on or off based on the disable switch position.

Seat Belt Indicators

The seat belt indicators are controlled by the RCM. For further information on seat belt indicators refer to: *Seat Belt System Description and Operation 7-72*.

Event Data Recorder (EDR) Data

The vehicle is equipped with an event data recorder (EDR). When a specific collision or similar condition occurs (such as airbag deployment or hitting a road obstacle), the recorder records the data related to vehicle dynamics and safety systems within a short period of time, such as the status of occupant safety components, status of accelerator/brake pedals, vehicle speed, etc., helping understand the operating conditions of vehicle systems.

The data elements recorded by EDR mainly include the following data:

No.	Data Element	Data Source	Collection Method
A1	Longitudinal delta V	EDR acceleration sensor in EDR controller	None
A2	Maximum recorded longitudinal delta V	EDR acceleration sensor in EDR controller	None
A3	Time to maximum recorded longitudinal delta V	EDR acceleration sensor in EDR controller	None
A4	Clipping flag	Since B1 lateral acceleration has been recorded, it is not necessary to record the clipping flag	None
A5	Vehicle velocity	Wheel speed sensor, transmitted via CAN bus after calculation	CAN bus
A6	Service brake, on or off	Brake pedal position sensor, transmitted via CAN bus after calculation	CAN bus
A7	Driver safety belt status	Driver seat belt buckle	Hard wire
A8	Accelerator pedal position, percentage of fully open position	Accelerator pedal position sensor, transmitted via CAN bus after calculation	CAN bus
A9	Revolution Per Minute (RPM)	Engine crankshaft position sensor, transmitted via CAN bus after calculation *Not required for electric vehicles	CAN bus *Not required for electric vehicles
A10	Power-on cycle at event	EDR controller	None
A11	Power-on cycle at reading	EDR controller	None
A12	Complete status of event data record	EDR controller	None
A13	Time interval from this event to the last event	EDR controller	None
A14	Vehicle Identification Number(VIN)	EDR controller	None
A15	ECU hardware number	EDR controller	None
A16	ECU serial number	EDR controller	None
A17	ECU software number	EDR controller	None
B1	Longitudinal acceleration	EDR acceleration sensor in EDR controller	None

No contents related to intelligent control are available now for Level A elements above.

The recorded vehicle speed data is obtained from the on-board CAN bus. They are obtained by a vehicle speed sensor connected to other modules on the vehicle (such as engine control or transmission control module or new energy control, etc.), and transmitted and released via CAN bus after calculation.

The above data can be extracted by purchased general on-board diagnostic tools that meet the requirements in SAE J1962 and ISO 15765 and their referenced standards. (Such as CDR tools from BOSCH or MDI2 tools used at SAIC General Motors service stations)

Non-locked event storage overwrite mechanism and over writable event types

Locking Conditions:

- Deployment event of irreversible restraints will be permanently locked.

- Non-deployment events will be locked, but become non-locked events after 255 ignition cycles.

Overwrite Mechanism:

- Permanently locked events will not be overwritten. Only the non-locked EDR events can be overwritten, overwriting the earliest event first.
- If the EDR storage space is insufficient, the deployment events of irreversible restraints can overwrite any non-deployment events.
- If the EDR storage space is insuficcient, the non-deployment events can overwrite any non-deployment events that become non-locked after 255 ignition cycles.

Theft Deterrent

Schematic and Routing Diagrams

Theft Deterrent System Schematics (Content Theft Deterrent)

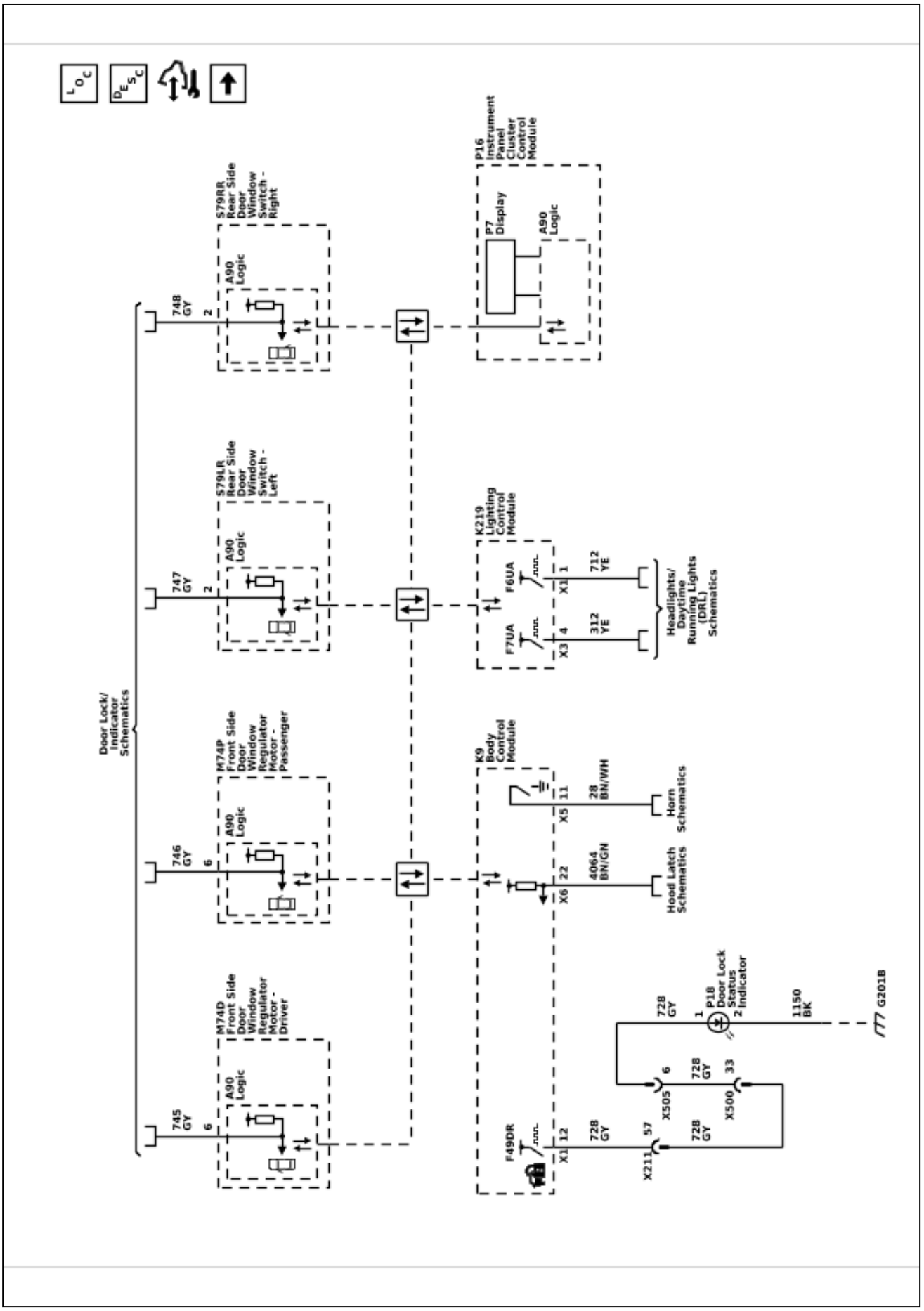

Theft Deterrent System Schematics (Content theft Deterrent Alarm and Glass Breakage Sensors (UTJ))

6613540

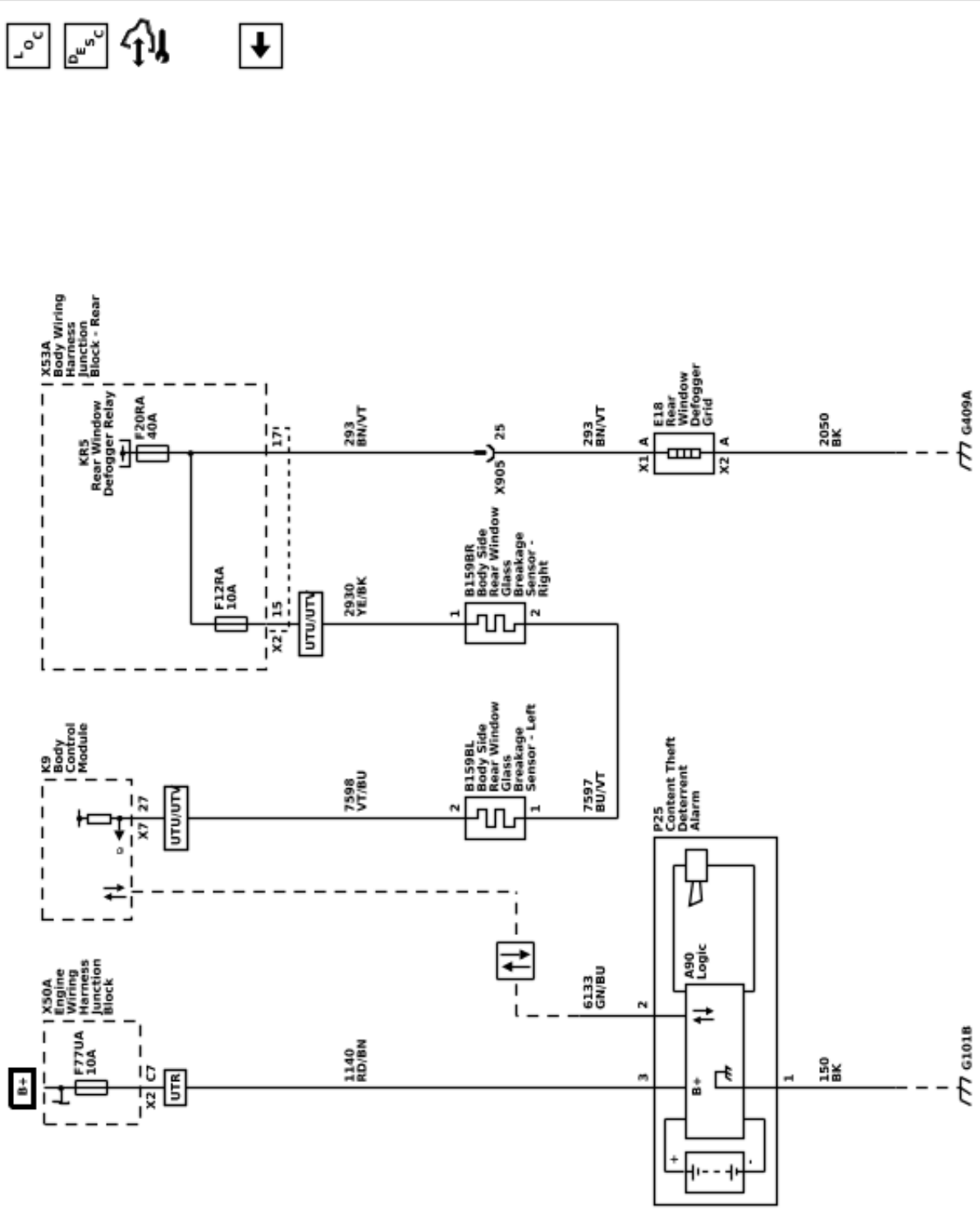

Description and Operation

Theft Systems Description and Operation

When armed, the content theft deterrent system is designed to deter vehicle content theft by pulsing the horns and exterior lamps for approximately 30 seconds when an unauthorized vehicle entry is detected. However, the content theft deterrent system does not affect engine starting.

An unauthorized entry can be any of the following with the content theft deterrent system armed:

- Unauthorized entry into the engine area
- Unauthorized entry into the vehicle compartments
- When any door is opened without using the UNLOCK command from a keyless entry transmitter
- After a battery reconnect, if the battery was disconnected with the content theft deterrent system armed

The components of the content theft deterrent system are:

- Body Control Module (BCM)
- Remote control door lock receiver
- Security indicator
- Door ajar switches
- Hood ajar switch
- Liftgate ajar switch, if equipped
- Intrusion sensor, if equipped
- Intrusion sensor disable switch, if equipped
- Glass breakage sensor, if equipped
- Alarm siren, if equipped

Arming the Content Theft Deterrent System

Use the following procedure in order to arm the system:

1. Place the vehicle in P (park).
2. Ignition OFF/Vehicle OFF.
3. Open any door.

Note: The system is not armed if the doors are locked manually; the power door lock switch or remote keyless entry transmitter must be used to arm the content theft deterrent system.

4. Lock the doors with the power door lock switch or by pressing the LOCK button on the transmitter. The system is in standby mode and will not start the arming timer until all doors are closed.
5. The system will begin the arm sequence immediately after the last door is closed. If the keyless entry transmitter is used to arm the system after the vehicle doors are closed, the arm sequence will begin as soon as the LOCK command is received from the transmitter.
6. Pressing the LOCK button on the keyless entry transmitter a second time will bypass the delayed arming function and force the system to arm.

Locking the Vehicle Without Arming the Content Theft Deterrent System

Locking the vehicle may be accomplished without arming the content theft deterrent system. Use of the manual door locks will lock the vehicle, but will not arm the content theft deterrent system.

Disarming an Armed System/Silencing an Alarm

If system arming has been requested by the power door lock switch or the keyless entry transmitter, it must be disarmed.

Note: Disconnecting the battery or removing fuses does not disable the arm or alarm modes, since the BCM stores the content theft deterrent mode status in memory.

- To disarm the content theft deterrent system in standby mode, perform one of the following:
  - Press the UNLOCK button on the keyless entry transmitter.
  - Approach the vehicle with a valid keyless entry transmitter and pull the vehicle door handle.
  - Turn the ignition ON/Vehicle ON.
- To disarm the content theft deterrent system in the armed mode (non-event) or when activated (during an alarm event):
  - Press the UNLOCK button on the keyless entry transmitter.
  - Turn the ignition ON/Vehicle ON.

Content Theft Deterrent Circuit Description

The following is a description of each component used in the content theft deterrent system:

Body Control Module
The content theft deterrent system is an internal function of the BCM which utilizes serial data and various switch inputs information to perform content theft deterrent functions. When the BCM detects an unauthorized entry, it activates the horns and exterior lamps. The BCM has 4 basic modes (disarmed, standby, armed, and alarm) for operating the content theft deterrent system. The different modes are described below.

1. The BCM has the content theft deterrent system in a disarmed mode until the following conditions are detected:

- Ignition OFF/Vehicle OFF.
- Doors locked by either the power door lock switch or the LOCK button on the transmitter.

2. The BCM enters the standby mode when the above conditions are detected. If a door was already opened when the arm mode was requested, the standby mode does not start the timer until the last door is closed.
3. When the last door is closed, a 15 second timer is activated. Once the timer has expired, the BCM enters the armed mode. After this delay, any unauthorized entry will activate the alarm mode.
4. When the BCM detects an unauthorized entry, the BCM enters the alarm mode. The BCM activates the horns and exterior lamps for 30 seconds. This is followed by a three minute time-out with the horn no longer active. If no new intrusions are detected after the time-out, the horn is not active. The system must be disarmed or the intrusion condition removed after the time-out for the system to exit alarm mode.

Remote Control Door Lock Receiver
The keyless entry system can arm and disarm the content theft deterrent system. When the remote control door lock receiver receives a door lock or unlock signal from the transmitter, the remote control door lock receiver sends a message to the BCM via serial data to perform the appropriate arm/disarm functions.

Security Indicator
The security LED is illuminated on the upper I/P by the BCM. The content theft deterrent system uses the security LED to inform the driver of system status prior to arming.

Door Ajar Switches
The content theft deterrent system uses the door ajar switches as a status indicator to activate the alarm. The door ajar switches are monitored by the body control module via a discrete input from each door ajar switch. If the BCM receives a signal indicating a door is opened when the content theft deterrent system is armed, the BCM activates the alarm.

Hood Ajar Switch
The content theft deterrent system uses the hood ajar switch as a status indicator to activate the alarm. The BCM monitors the hood ajar switch via a discrete input from the switch. If the BCM receives a signal indicating the hood has been opened when the content theft deterrent system is armed, the BCM activates the alarm.

Liftgate Ajar Switch
The content theft deterrent system uses the liftgate ajar switch as a status indicator to activate the alarm. The BCM monitors the liftgate ajar switch via a discrete input from the switch. If the BCM receives a signal indicating the liftgate has been opened when content theft deterrent system is armed, the BCM activates the alarm.

Intrusion Sensor
The intrusion sensor is located in the overhead console and uses two ultrasonic sensors to detect any motion inside the vehicle. If motion is detected inside the vehicle while the content theft deterrent system is armed, the system will transition to the alarm mode. The intrusion sensor also acts as an inclination sensor. The inclination sensor determines the vehicles level when the content theft deterrent system is armed. If the vehicle level is changed while the system is armed, such as being lifted by a tow truck or raised with a jack, the alarm will be activated. The intrusion sensor can be disabled using the intrusion sensor disable switch. The intrusion sensor disable switch also shows the intrusion sensor status using a status LED.

Glass Breakage Sensor
The glass breakage sensors (if equipped) are located on the rear side windows and are supplied battery voltage at all times. The BCM monitors the glass breakage sensor signal circuit. If the rear side glass is broken, the glass breakage sensor signal circuit will open and the BCM will enter the alarm mode.

Alarm Siren
The content theft deterrent system uses the alarm siren as an audible alert device to alert individuals near the vehicle that a vehicle intrusion is occurring. The siren is supplied battery voltage and ground for operation and communicates with the body control module (BCM) via a dedicated LAN circuit.

Inputs
The BCM monitors the following inputs for content theft deterrent:

- Door ajar switches
- Keyless entry transmitter LOCK/UNLOCK buttons; a message from the remote control door lock receiver
- Immobilizer status—The BCM uses the immobilizer status for disarming the system or silencing an alarm when the correct vehicle key is used to start the vehicle
- Liftgate ajar switch
- Hood ajar switch
- Intrusion sensor
- Glass breakage sensor

Outputs

The BCM controls the following for content theft deterrent:

- Horn relay
- Exterior lamps
- Alarm siren

Section 8

Seats

Power Seats **8-2**
Schematic and Routing Diagrams **8-2**
Driver Seat Schematics 8-3
Passenger Seat Schematics 8-7
Rear Seat Schematics 8-9
Description and Operation **8-12**
Lumbar Support/Massage Description and Operation (4-Way) 8-12
Lumbar Support/Massage Description and Operation (2-Way) 8-12
Lumbar Support/Massage Description and Operation (With Seat Bolster Memory Control Module) 8-12
Memory Seats Description and Operation 8-13
Power Seats System Description and Operation (Driver or Passenger without Seat Adjuster Memory Module) 8-16
Power Seats System Description and Operation (Driver w/ Seat Adjuster Memory Module) 8-16
Power Seats System Description and Operation (3rd Row) 8-17
Power Seats System Description and Operation (2nd Row) 8-19
Seat Heating and Cooling **8-20**
Schematic and Routing Diagrams **8-20**
Heated/Cooled Seat Schematics 8-21
Description and Operation **8-27**
Heated/Vented Seat Description and Operation 8-27
Rear Heated Seats Description and Operation 8-28

Seats

Power Seats

Schematic and Routing Diagrams

6613541

Driver Seat Schematics (Power Seat (- (A45 / AUN)))

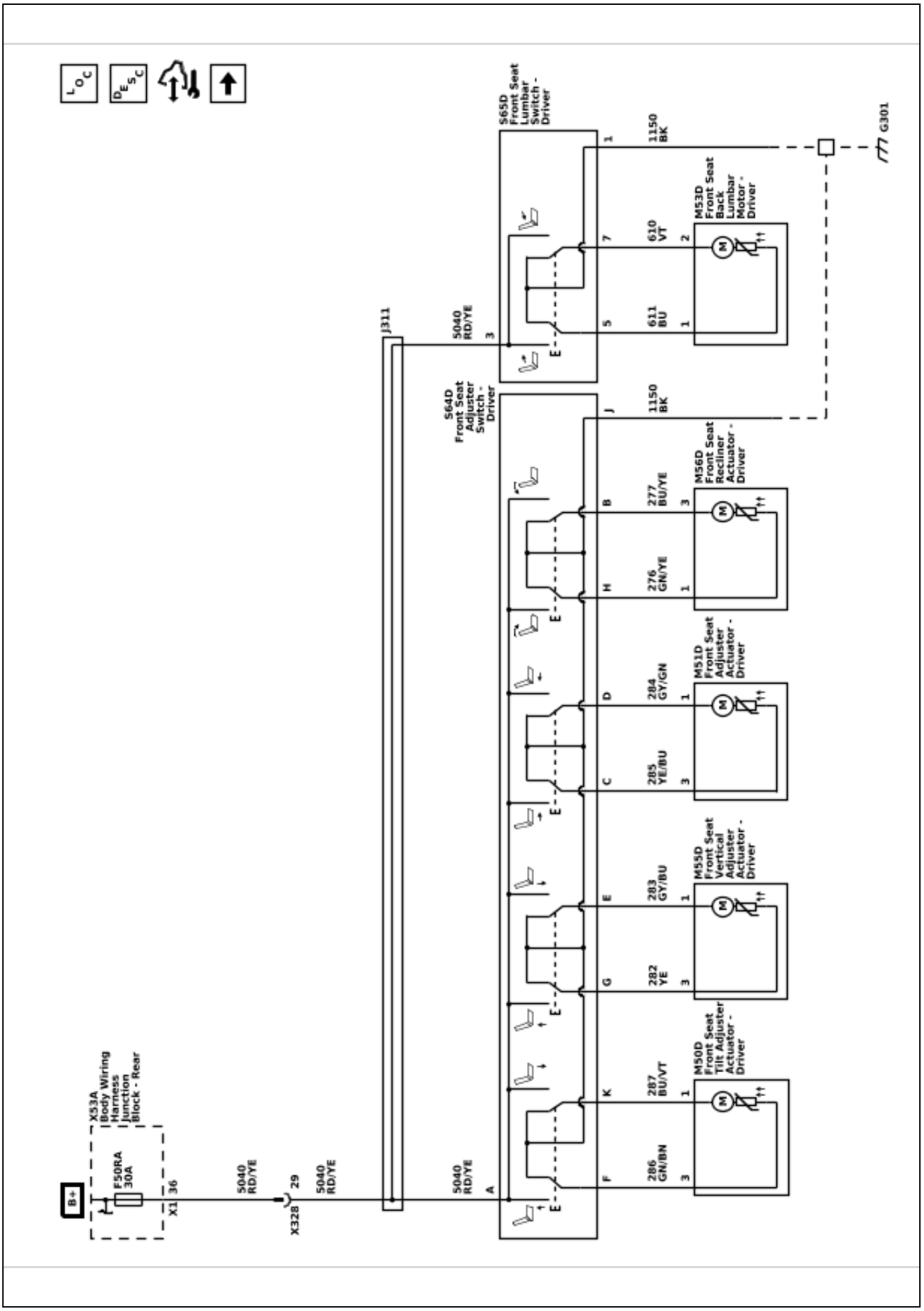

Driver Seat Schematics (Module Power, Ground, Serial Data, Motors, and Memory Controls (A45 / AUN))

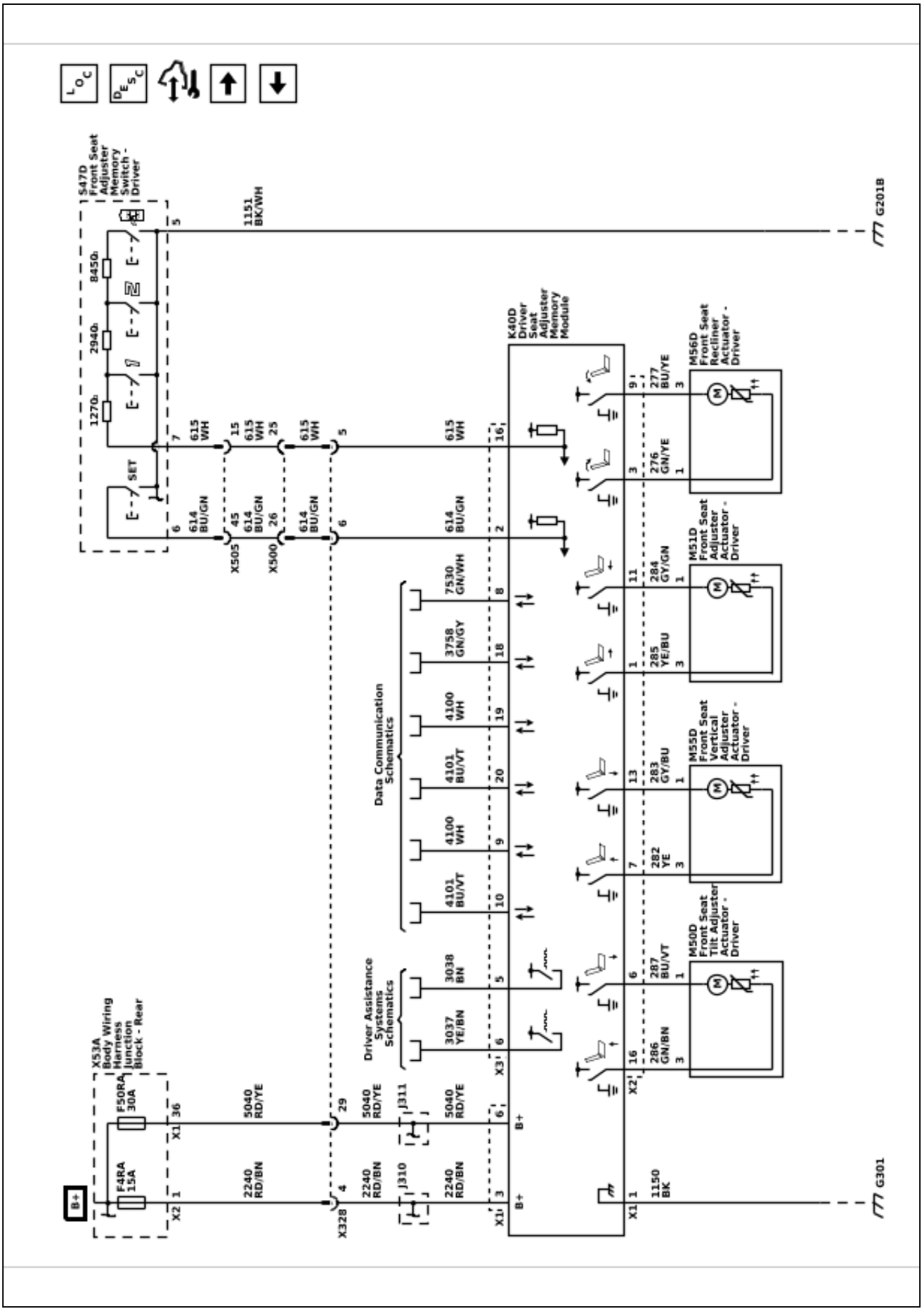

6613543

Driver Seat Schematics (Seat Adjuster Switches (A45 / AUN))

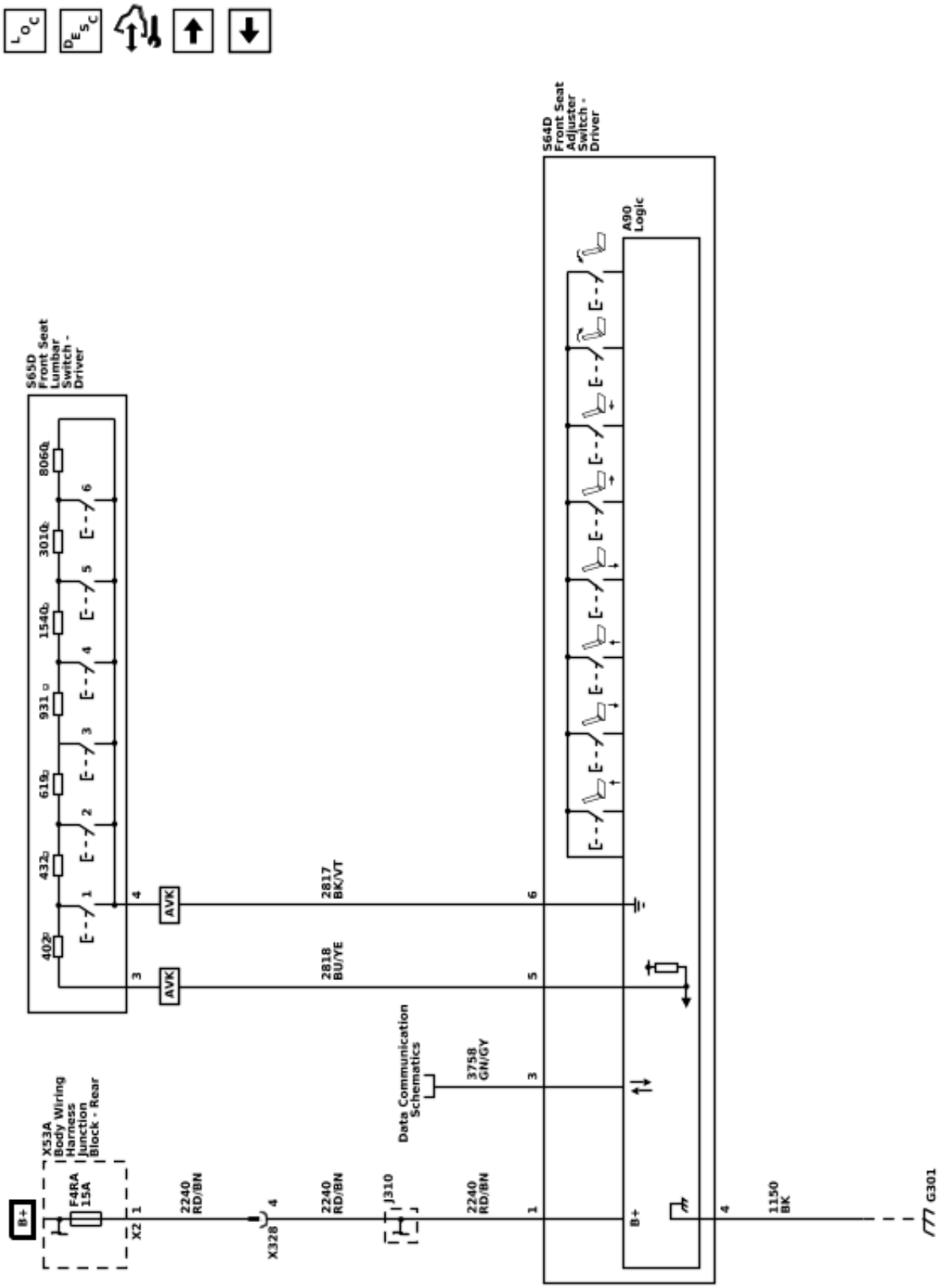

Driver Seat Schematics (Seat Lumbar/Bolster (AVK))

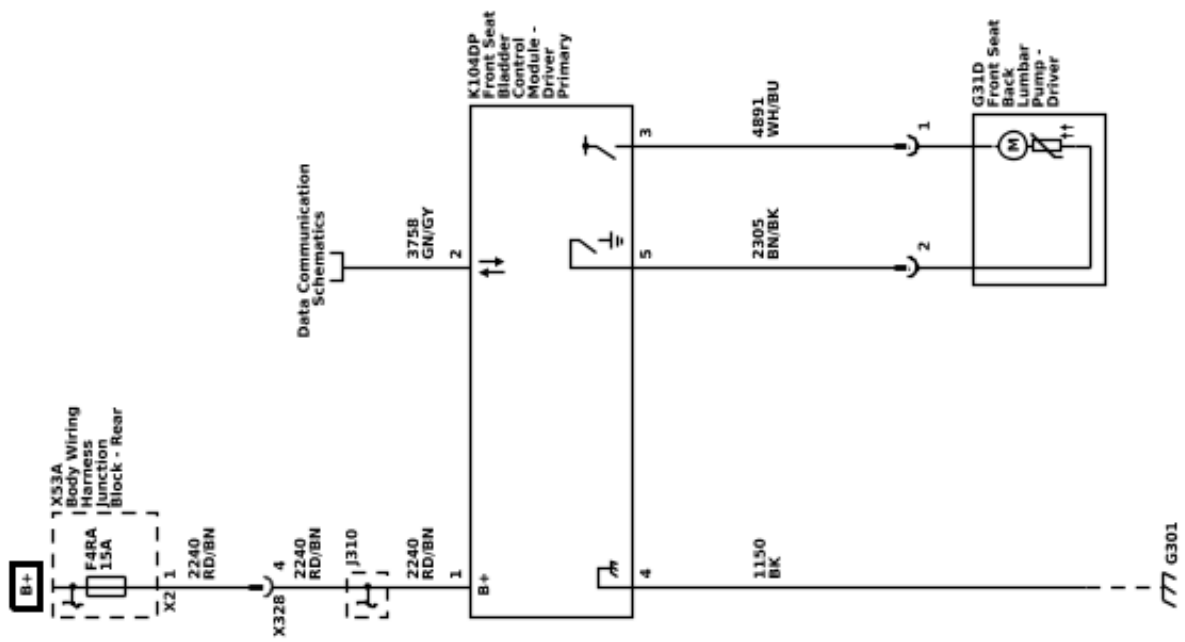

6613544

6613545

Passenger Seat Schematics (Power Seat)

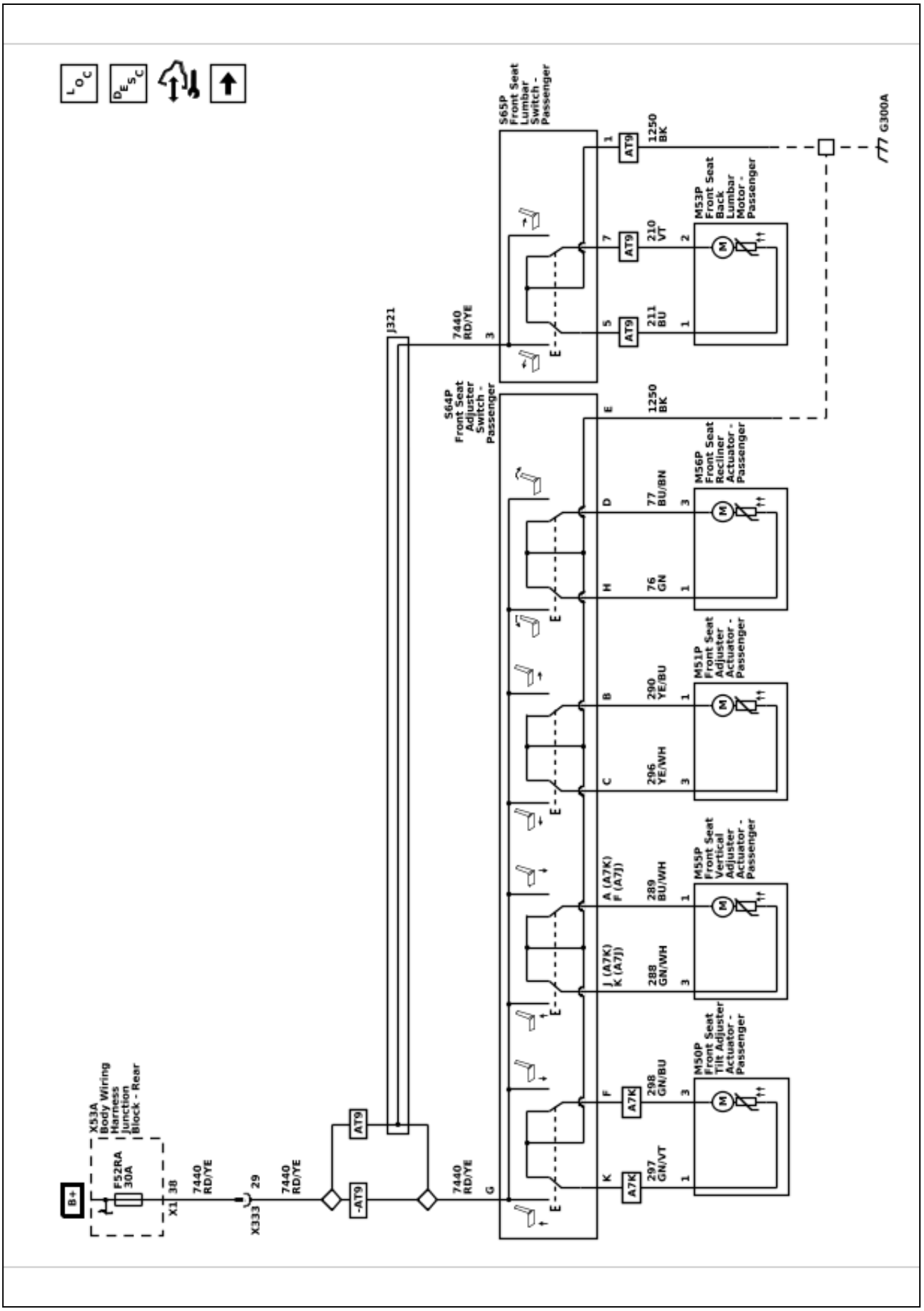

6613547

Passenger Seat Schematics (Seat Lumbar/Bolster (AVU))

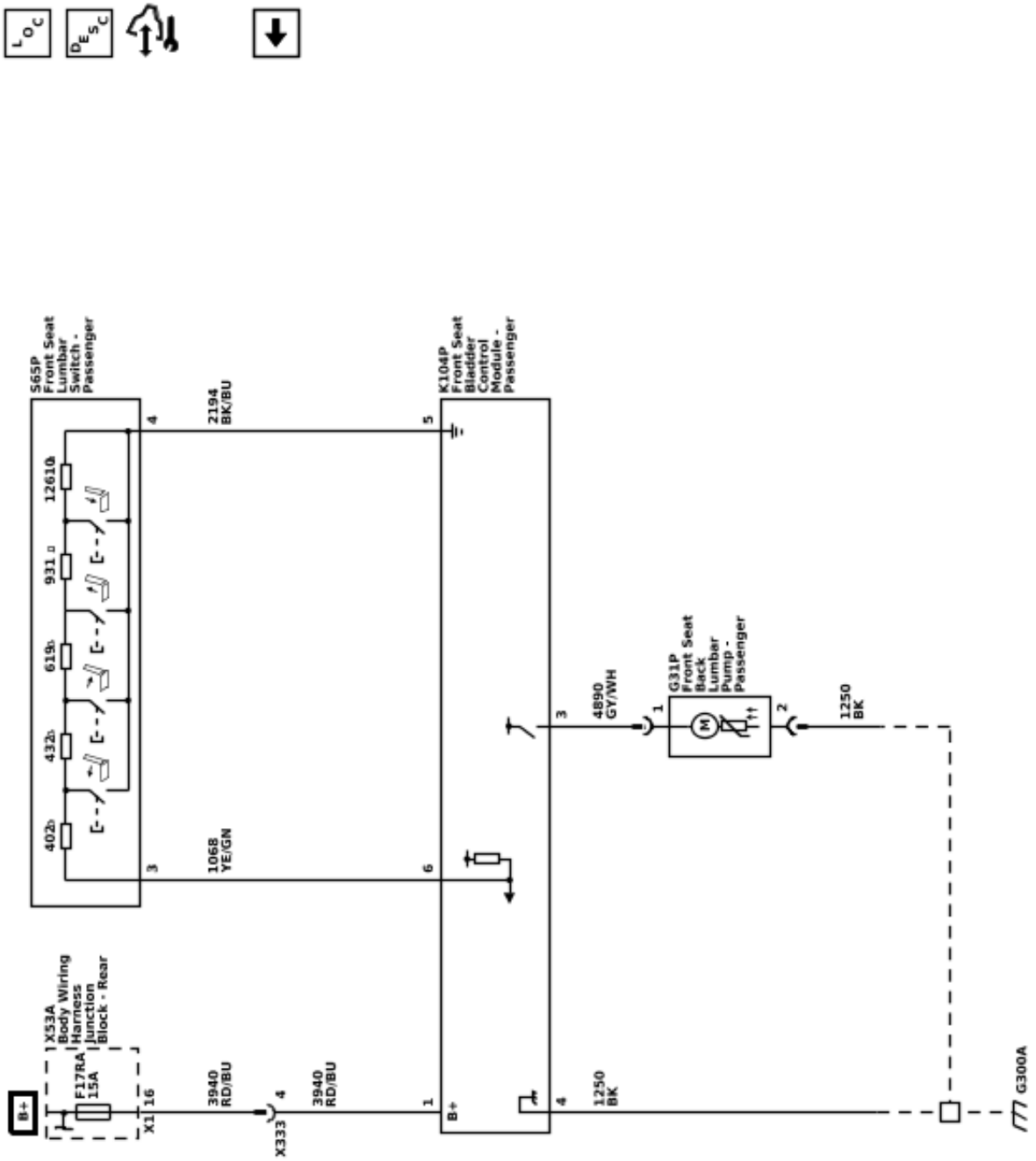

6613548

Rear Seat Schematics (2nd Row Seats (ATN / ATT))

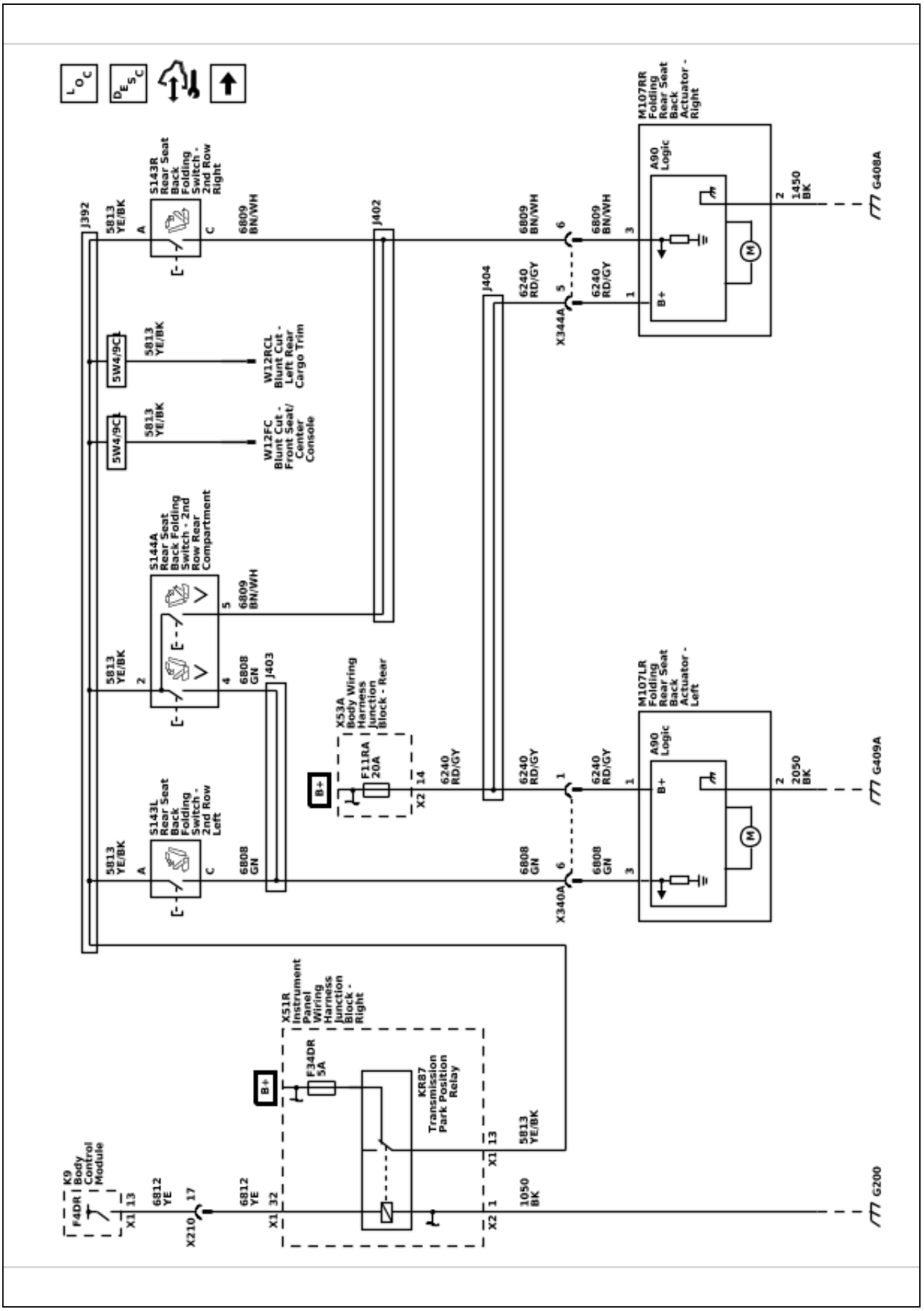

Rear Seat Schematics (3rd Row Folding Seat Control Module Power, Ground, Serial Data, and Controls (AS8))

6613549

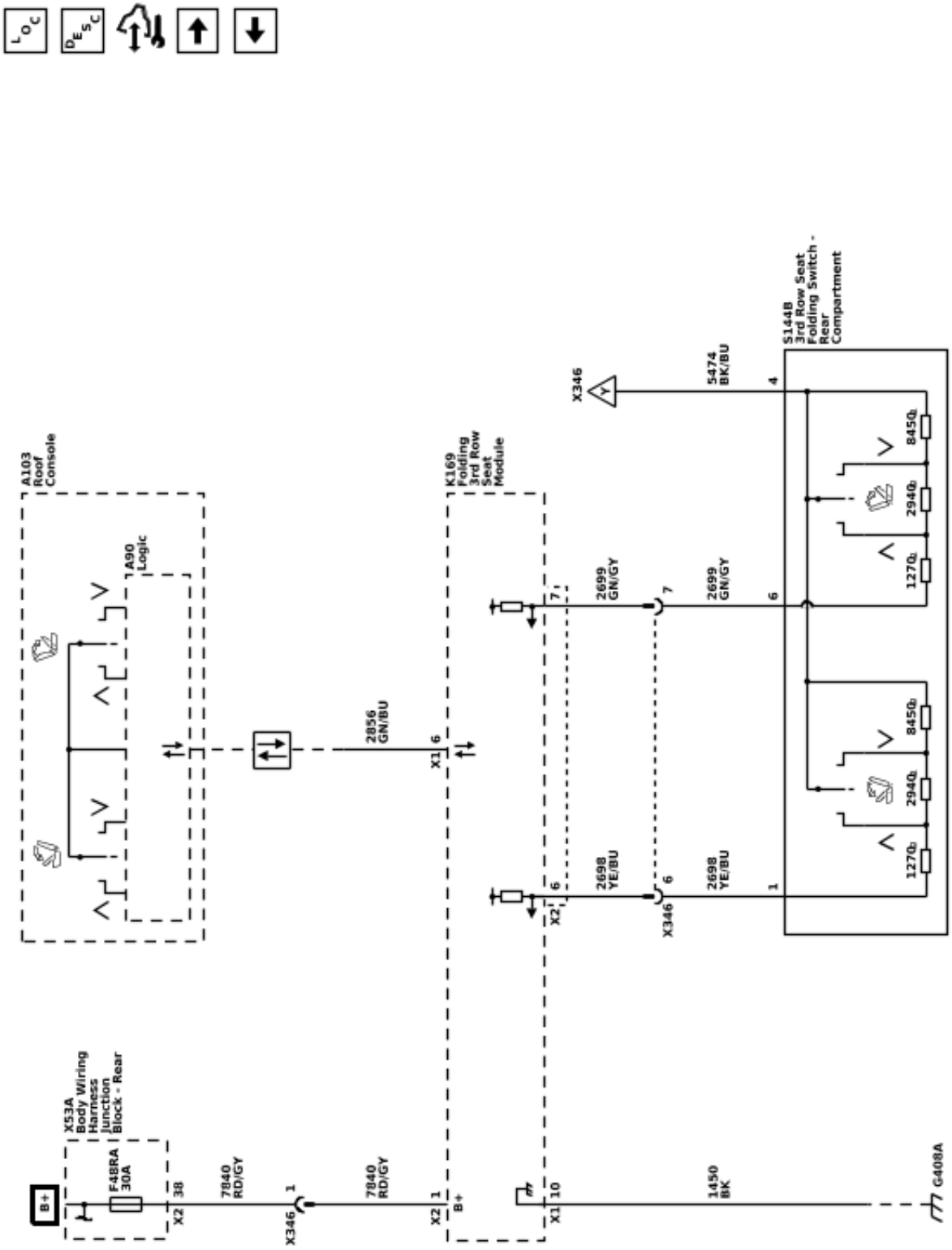

Rear Seat Schematics (3rd Row Folding Seat Motors (AS8))

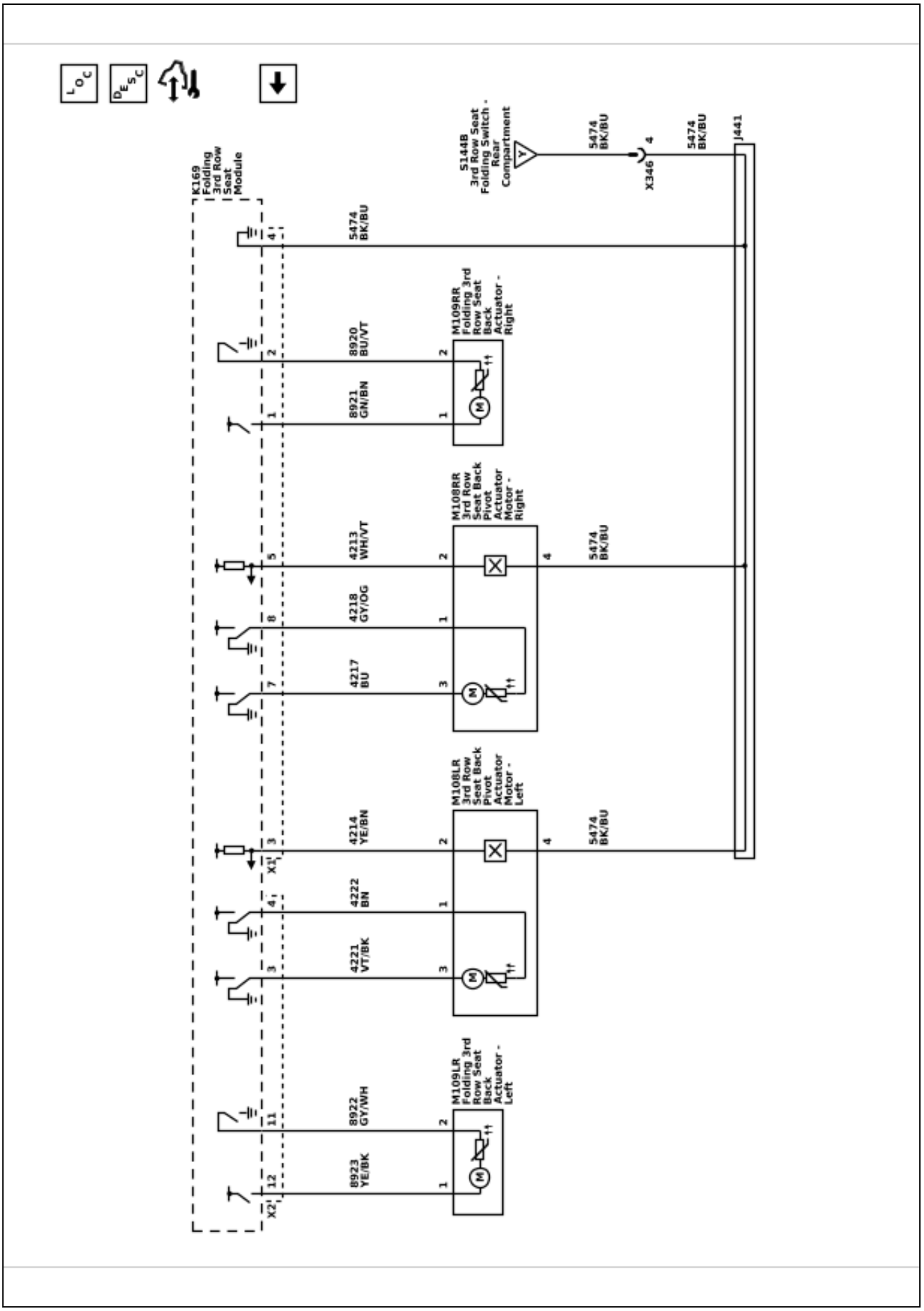

6613551

Description and Operation

Lumbar Support/Massage Description and Operation (4-Way)

Lumbar Support Components

The driver and front passenger pneumatic lumbar support system each consist of the following components:

- Seat lumbar support switch
- Seat lumbar support control module
- Seat lumbar/bolster pump

Circuit Description

Battery voltage is supplied at all times to the seat lumbar support control module through a 10 A fuse located in the fuse block. Ground is also supplied at all times to the seat lumbar support control module and the seat lumbar/bolster pump.

The driver seat lumbar support switch is a resistive ladder switch. The seat lumbar support control module supplies the seat lumbar support switch with a signal and low reference circuits. When a lumbar switch is pressed, the signal circuit from the seat lumbar support control module is pulled low through the switch contacts and series of resistors indicating the lumbar support request. In response to this request, the seat lumbar support control module energizes its internal inflate solenoid and applies battery voltage through the lumbar support pump control circuit to the pump. The pump runs to inflate the appropriate support bladder until the switch is released.

Description of Operation

The following describes the lumbar support operation and how the seat lumbar support control module responds to each of the lumbar support switch inputs:

- When the lumbar support switch pressed in the FORWARD direction, the seat lumbar support control module will command the lumbar support pump ON and the upper and lower lumbar support bladders should inflate until the bladders are 100% inflated or the switch is released.
- When pressing the lumbar support switch in the REARWARD direction, the seat lumbar support control module will slowly deflate the upper and lower lumbar support bladders until the switch is released or both bladders are 100% deflated.
- When the lumbar support switch is pressed in the UP direction, the seat lumbar support control module will slowly inflate the upper lumbar support bladder until the switch is released or the bladder is 100% inflated.
- When the lumbar support switch is pressed in the DOWN direction, the seat lumbar support control module will slowly deflate the upper lumbar bladder while it inflates the lower lumbar bladder. The seat lumbar support control module will continue this operation until the switch is released or the upper lumbar bladder is 100% deflated and the lower lumbar bladder is 100% inflated.

Lumbar Support/Massage Description and Operation (2-Way)

Lumbar Support Components

The power seat lumbar support systems consist of the following components:

- S65 Front Seat Lumbar Switch
- M53 Front Seat Back Lumbar Motor

The seat lumbar switch provides both power and ground to the lumbar support motor. The motor contains an electronic circuit breaker (PTC) that will reset only after voltage has been removed from the motor. The motor moves the lumbar support forward and rearward.

When the lumbar switch is operated to move the lumbar support rearward, battery positive voltage is applied through the lumbar rearward switch contacts and the lumbar motor rearward control circuit to the lumbar support motor. The motor is grounded through the lumbar forward switch contacts and the lumbar motor forward control circuit to the motor. The motor runs to drive the lumbar support rearward away from the occupant's back until the switch is released. Moving the lumbar support forward works similarly to moving the lumbar support rearward, except that battery positive voltage and ground are applied on opposite circuits causing the motor to run in the opposite direction.

Lumbar Support/Massage Description and Operation (With Seat Bolster Memory Control Module)

The memory lumbar/bolster/massage system uses air bladders to adjust various aspects of the seat configuration to meet an occupant’s preference. It also allows these adjustments/types/intensities to be stored to a memory position along with the stored seat position.

Some vehicles may also be equipped with dynamic mode control which gives the chassis subsystem the ability to request an automatic adjustment to the seat's bolster support depending on vehicle driving conditions.

The various seat adjustments and functionality which may be possible include:

- Lumbar support – forward and rearward
- Lumbar support – up and down

- Seat back side bolster – in and out
- Back massage – type(s) and intensity (intensities)
- Cushion side bolster – in and out

The components of the system include:

- LIN based seat switch
- Seat adjuster memory module
- Bolster memory control module
- Seat air pump motor
- Air bladders
- Information display (If applicable)

LIN Seat Switch

The seat switch communicates all customer requests for seat movement or adjustment via the LIN serial data bus to the seat adjuster memory module. The seat switch may consist of the following controls:

- Seat adjuster switch similar to the typical discrete seat switch
- Massage On/Off switch, if massage is equipped
- 4-way lumbar switch which can be activated Up/Down/Forward/Rearward
- 2-way bolster switch which can be activated Up/Down

Lumbar/Bolster Operation

Note: When the Ignition Off, it is normal operation for bladders to deflate.

Once the lumbar/bolster feature has been activated, the seat adjuster memory module will command the seat bolster memory control module to perform the required pneumatic movements via LIN serial data messages.

The seat bolster memory control module contains the electronic circuitry for executing the commanded pneumatic seat adjustments, air direction solenoids, pressure sensors for storing air bladder pressures, and an output which supplies battery power to the external seat air pump motor when any of the air bladders require inflating.

Based on the LIN command from the seat adjuster memory module, the seat bolster memory control module controls the appropriate air solenoids and activates or deactivates the external air pump in order to inflate or deflate the air bladders in the correct combination. When an air bladder needs inflating its solenoid opens and the pump motor is activated pumping air into the bladder. When an air bladder needs deflating its solenoid opens the release valve and air is allowed to bleed out of the bladder into the vehicle cabin.

To support memory recall and massage, the seat bolster memory control module uses internal air pressure sensors to track, store and recall the positions of all the air bladders under its control.

The massage On/Off switch on the LIN seat switch allows the customer to turn the massage feature on and off.

Memory Seats Description and Operation

The memory seat system consists of the following components:

- Driver seat adjuster switch
- Driver seat memory switch
- Seat memory control module
- Driver seat horizontal motor
- Driver seat front vertical motor
- Driver seat rear vertical motor
- Driver seat recline motor

Driver Seat Adjuster Switch

Ground is supplied at all times to the seat adjuster switch. Battery positive voltage is supplied at all times to the seat adjuster switch through a 10 A fuse located in the fuse block. When the seat adjuster switches are pressed, the appropriate signal message is sent to the seat memory control module, via a LIN message. The seat memory control module then commands the appropriate seat motor to move in response to the switch signal message.

Seat Memory Control Module Power and Grounds

Battery positive voltage is supplied at all times to the seat memory control module through a 30 A fuse located in the fuse block. This voltage is used by the module to apply power to the seat motor when commanded ON. Battery positive voltage is also applied at all times to the seat memory control module through a 10 A fuse located in the fuse block.
This voltage is used to power up the module. Ground is provided to the seat memory control module through the module ground circuit and ground connection.

Seat Motors

There are 4 motors that move the position of the seat. These are the seat horizontal motor, seat front vertical motor, seat rear vertical motor, and the seat back recline motor. The horizontal motor moves the entire seat forward and rearward. The seat front vertical motor moves the front of the seat cushion up or down. The seat rear vertical motor moves the rear of the seat cushion up and down. The recline motor moves the angle of the seat back forward or rearward.

The seat memory control module controls all seat motors via half bridges that are connected to a single power rail internal to the module. The module connects each of the seat motor outputs together when a seat motor is not in operation. The seat memory control module continually checks the motor control circuits for shorts to ground or voltage. If a fault is detected with a motor control circuit movement of the related motor is inhibited. All of the motors operate independently of each other. Each motor contains an electronic circuit breaker (PTC), which will reset only after voltage has been removed from the motor.

All seat motors are reversible. For example, when a seat switch is pressed to move the entire seat forward, a signal is sent from the seat adjuster switch to the seat memory control module, via the LIN message. In response to this signal, the module applies battery voltage through the seat horizontal motor forward control circuit and ground through the seat horizontal motor rearward control circuit to the motor. The motor runs to drive the entire seat forward until the switch is released, the motor reaches the end of travel, or an obstruction prevents further seat movement. Moving the entire seat rearward works similarly to moving the entire seat forward, except that battery voltage and ground are applied on the opposite circuits causing the motor to run in the opposite direction. All of the motors are powered this way.

Position Detection

Note: There are no physical position sensors used to detect the seat position and movement.

To monitor the seat position, the seat memory control module counts the electrical pulses of each seat motor. During seat motor operation, the electrical pulses are counted and the direction of the seat movement is monitored to determine the seat position.

The seat memory control module determines seat position by keeping a running counter where movement in the forward/upward direction adds counts and movement in the rearward/down direction subtracts counts.

The value of these counters, which represent seat positions, are stored in memory for future seat memory recall operation. During a memory seat position recall, the seat memory control module moves the seat in such a way to return it the stored counter value.

Memory Functions

Note: The seat memory control module does not store the mirror, column, MBM, or HUD positions. The seat memory control sends a serial data messages to the respective modules to recall their locally stored memory position.

In all power modes except crank, memory recalls can be initiated by pressing and holding one of the memory position buttons until the seat reaches the stored memory position associated with the activated button. This is called a supervised recall.

The driver seat memory switch is supplied ground at all times. The seat memory control module supplies set and memory recall signal circuits to the seat memory switch. When a memory recall switch is pressed, the signal circuit from the seat memory control module is pulled low through the switch contacts and a series of resistors indicating the memory recall request. In response to this signal, the seat memory control module commands the appropriate seat motors to move to the pre-recorded seat positions stored in memory.

Refer to the Owner's Manual for storing memory positions.

Seat Entry Memory Recall and Seat Exit Memory Recall

The seat memory control module will not perform Seat Entry Memory Recall and Seat Exit Memory Recall functions unless these options are enabled in vehicle personalization using the radio/HVAC controls.

Refer to Instruments and Controls/Vehicle Personalization in the Owner's Manual for the following memory personalization options:

- Seat Entry Memory Recall
- Seat Exit Memory Recall

The radio/HVAC controls reports the seat memory recall option settings to the seat memory control module via serial data message. The module will then store the memory recall option setting and examine it before making a memory seat adjustment. The seat memory recall option setting stored within the module will not change until the seat memory recall option setting in vehicle personalization is changed.

Memory Store and Recall Conditions

Note: Memory function requires a position be saved to the activated memory switch that is being recalled.

Memory Store Preconditions:

- RUN power mode
- No Stuck or Active Switches (seat, mirror, column, HUD)
- No SIR Disable
- No Load Shed 3
- No output motor drive faults detected
- No position plausibility faults detected
- No child lockout – rear

- Not limit switch fault
- No memory switch fault
- Memory ID is 1 or 2

Memory Recall Preconditions:

- No Stuck or Active Switches (seat, mirror, column, HUD)
- No SIR Disable
- No Load Shed 3
- No output motor drive faults detected
- No position plausibility faults detected
- No child lockout – rear
- Not limit switch fault
- No memory switch fault
- Memory ID is 1 or 2
- LIN communications Active
- Not currently performing a memory store
- A position has been saved to the recalled memory position

Memory Recall Termination Conditions:

- Precondition no longer met
- Active memory button changed
- Recall completed
- Exceed the max allowed recall time (30 seconds)
- OTA Programming Requested

Auto Memory Recall Preconditions:
Note: Auto Memory Recall is suspended during Start power mode.

- Valid Memory ID and Driver ID
- Valid Power Mode
- No Active or Stuck Switches
- No SIR disable
- Vehicle is Stopped
- No Load Shed 3
- No ASIL – A output fault detected
- No position plausibility faults detected
- No child lockout – rear
- Not limit switch fault
- No memory switch fault
- A position has been saved to the recalled memory position
- Enabled for Current Driver

Auto Memory Recall Termination Conditions:

- Precondition no longer met, except being Parked
- Exceed any recall completion times
- Vehicle On terminates Seat Exit Memory
- Vehicle Off terminates Seat Entry Memory
- OTA Programming Requested

Memory Recall Termination Data Displays:

The termination causes can be viewed through the Seat Memory Recall History data displays. The following are possible memory recall termination causes:

- No Recall Requested
- Seat Entry/Exit Recall Completed
- Memory Button 1 Recall Initiated
- Memory Button 1 Recall Completed
- Memory Button 2 Recall Initiated
- Memory Button 2 Recall Completed
- Memory Button Exit Recall Initiated
- Memory Button Exit Recall Completed
- Terminated by Other then following
- Memory switch stuck or Invalid
- Memory Switch (Not including SET) out of Range
- Memory SET switch Active or 1, 2, Exit switch changed
- Seat Switch Active or Stuck
- Mirror Switch Active or Stuck
- HUD Switch Active or Stuck
- No Position 1 stored
- No Position 2 Stored
- No Position Exit Stored
- Load Shed 3
- Sir Disabled
- Limit Switch Active or Fault
- Seat Entry – Not Parked terminated
- Invalid Power Mode
- Seat Forward Rearward Motor Control Fault
- Seat Front Up/Down Motor Control Fault
- Seat Rear Up/Down Motor Control Fault
- Recline Forward Rearward Motor Control Fault
- Seat Front Up/Down Motor Position Fault
- Seat Rear Up/Down Motor Position Fault
- Recline Forward Rearward Motor Position Fault

Power Seats System Description and Operation (Driver or Passenger without Seat Adjuster Memory Module)

The driver and passenger power seat systems each consist of the following components:

- Seat adjuster switch
- Seat horizontal motor
- Seat front vertical motor (If Equipped)
- Seat rear vertical motor
- Seat recline motor

Seat Motors

The seat switches provide both power and ground to the selected seat motors.

All of the seat motors operate independently of each other. Each motor contains an electronic circuit breaker (PTC) that opens in the event of a circuit overload and will reset only after voltage has been removed from the circuit. There are four seat position motors and two lumbar motors. These are the horizontal motor, front vertical motor, rear vertical motor, and the seat back recline motor. The seat horizontal motor moves the entire seat forward and rearward. The seat vertical motors may operate independently to tilt the front or rear of the seat cushion up or down. Both motors can also run simultaneously to move the entire seat up or down. The recline motor moves the angle of the seat back forward or rearward.

Seat Operation

All seat motors are reversible. For example, when the seat horizontal forward switch is pressed to move the entire seat forward, battery voltage is applied through the switch contacts and the seat horizontal motor forward control circuit to the motor. With the horizontal motor rearward switch contacts closed to the switch ground circuit, the motor runs in order to drive the entire seat forward until the switch is released. Moving the entire seat rearward works similarly to moving the entire seat forward, except that battery voltage and ground are applied on opposite circuits causing the motor to run in the opposite direction. All seat motors are powered this way.

Power Seats System Description and Operation (Driver w/ Seat Adjuster Memory Module)

The passenger power seat actuators controlled by a Seat Adjuster Memory Module consists of the following components:

- Seat adjuster switch
- Seat adjuster memory module
- Seat horizontal motor
- Seat front vertical motor
- Seat rear vertical motor
- Seat recline motor

Front Seat Adjuster Switch

Ground is supplied at all times to the Front Seat Adjuster Switch. Battery positive voltage is supplied at all times to the Front Seat Adjuster Switch through a 10 A fuse located in the fuse block. When the Front Seat Adjuster Switches are pressed, the appropriate signal message is sent to the Seat Adjuster Memory Module, via a LIN message. The Seat Adjuster Memory Module then commands the appropriate seat motor to move in response to the switch signal message.

Seat Adjuster Memory Module Power and Grounds

Battery positive voltage is supplied at all times to the Seat Adjuster Memory Module through a 30 A fuse located in the fuse block. This voltage is used by the module to apply power to the seat motor when commanded ON. Battery positive voltage is also applied at all times to the Seat Adjuster Memory Module through a 10 A fuse located in the fuse block. This voltage is used to power up the module. Ground is provided to the Seat Adjuster Memory Module through the module ground circuit and ground connection.

Seat Actuators

There are 4 actuators that move the position of the seat. These are the seat horizontal motor, seat front vertical motor, seat rear vertical motor, and the seat back recline motor. The horizontal motor moves the entire seat forward and rearward. The seat front vertical motor moves the front of the seat cushion up or down. The seat rear vertical motor moves the rear of the seat cushion up and down. The recline motor moves the angle of the seat back forward or rearward.

The Seat Adjuster Memory Module controls all seat actuators via half bridges that are connected to a single power rail internal to the module. The module connects each of the seat motor outputs together when a seat motor is not in operation. The Seat Adjuster Memory Module continually checks the motor control circuits for shorts to ground or voltage. If a fault is detected with a motor control circuit movement of the related motor is inhibited. All of the actuators operate independently of each other. Each motor contains an electronic circuit breaker (PTC), which will reset only after voltage has been removed from the motor.

All seat actuators are reversible. For example, when a seat switch is pressed to move the entire seat forward, a signal is sent from the Front Seat Adjuster Switch to the Seat Adjuster Memory Module, via the LIN message. In response to this signal, the module applies battery voltage through the seat horizontal motor forward control circuit and ground through the seat horizontal motor rearward control circuit to the motor. The motor runs in order to drive the entire seat forward. Moving the entire seat rearward works similarly to moving the entire seat forward, except that battery voltage and ground are applied on the opposite circuits causing the motor to run in the opposite direction. All of the actuators are powered this way.

Power Seats System Description and Operation (3rd Row)

The left and right 3rd row folding seat system each consist of the following components:

- Folding seat control module – 3rd row
- Folding seat switch – D-pillar 3rd row
- Folding seat switch – Overhead console 3rd row
- Folding seat motor – seat back release 3rd row
- Folding seat motor – 3rd row
- Folding seat sensor

Folding Seat Control Module – 3rd Row

The folding seat control module controls both sides of the 60/40 split 3rd row folding seat.

The folding seat control module will be in a low power sleep state until it detects the activation of one of the folding seat switches. It will remain in its normal operating awake mode and not return to its sleep mode until all its outputs have been off for 30 s and it has been determined that no switches are active.

Battery positive voltage is supplied at all times to the folding seat control module through a 30 A fuse located in the rear body fuse block. The module uses this voltage for both logic power and to power the seat motors and seat back release motors. Each folding seat motor and release motor is controlled by a relays internal to the folding seat control module and through two control circuits to each motor and release motor. The control module checks to see if the control circuits are shorted to ground or voltage before enabling folding seat operation.

D-Pillar Folding Seat Switches

The 3rd row folding seat switches are located on the D-pillar of the rear cargo area. Each side of the 60/40 split seat has a pair of fold and unfold normally open, high assertion, momentary switches designed to keep them from being simultaneously pressed.

When the transmission is in the park position, battery voltage is supplied to the folding seat switches through the normally closed contacts of the Park Enable Relay which is controlled by the BCM. When the transmission is not in the park position, the BCM energizes the relay opening the contacts and removing battery voltage from the switches. Thus folding seat operation is only available with the vehicle transmission in the park position.

Each switch contact is connected to an individual discrete input of the folding seat control module which provides a pull down to ground on these signal circuits. When a folding seat switch is pressed battery voltage is applied through the switch contacts and the signal circuit to the folding seat control module. The module then commands the folding seat to move in response to the switch signal.

Overhead Console Folding Seat Switches

The overhead console has two switches that are used to fold the 3rd row seat. The left switch operates the left portion of the seat and the right switch operates the right portion of the seat. When the left LED is illuminated it means that the 3rd row power folding seat module sees one of the unlatch switches as active and the left seatback in the 3rd row is not fully in the unfolded seated position. When the right LED is illuminated it means that the 3rd row power folding seat module sees one of the latch/unlatch switches is active and the right seatback in the 3rd row is not fully in the unfolded seated position.

When the transmission is in the park position, battery voltage is supplied to the folding seat switches through the normally closed contacts of the Park Enable Relay which is controlled by the BCM. When the transmission is not in the park position, the BCM energizes the relay opening the contacts and removing battery voltage from the switches. Thus folding seat operation is only available with the vehicle transmission in the park position.

Each switch contact is connected to an individual discrete input of the folding seat control module which provides a pull down to ground on these signal circuits. When a folding seat switch is pressed battery voltage is applied through the switch contacts and the signal circuit to the folding seat control module. The module then commands the folding seat to move in response to the switch signal.

Folding Seat Motor – Seat Back Release

The folding seat back release motor is a spring loaded device used to latch the seat back into its desired parked position or to unlatch the seat back for folding or unfolding seat operation. There are three modes of release motor control; retract, hold, and release. When the folding seat switch is pressed to fold the seat, the folding seat control module applies a PWM voltage, approximately 95% duty cycle, through the seat back release motor control circuit to the motor releasing the seat back. The control module holds the release motor at a reduced voltage, approximately 25% duty cycle, until a stall condition is reached. Once a stall condition is reach the module releases the motor latching the seat back in place. One second after the motor is released, the seat will move in the opposite direction of travel to confirm the seat back is locked in a secure position. This action will continue until a stall condition is detected, refer to Folding Seat Sensor below. After the completion of the latch lock conformation, the module will relieve any bound up tension after the latch lock conformation.

Folding Seat Motor

The folding seat motor is used to physically move the seat back to its desired position. It is a bi-directional motor connected to two H-Bridge relay outputs of the folding seat control module. To fold the seat, one control module output provides power to one side of the motor while the other side is grounded through the other relay output. To unfold the seat, the polarities on the motor are reversed.

While the motor outputs are off, the control module internal diagnostic network applies a bias voltage of 2.5 V to the motor control circuits. If there is a short to voltage or a short to ground on either control circuit, this will cause a shift in the bias voltage on the diagnostic network and the module will not activate a motor under this condition.

Folding Seat Sensor

Internal to the folding seat motor is the folding seat sensor. The sensor is a 2-wire hall-effect sensor which is used strictly to determine the stall status of the folding seat motor. It is not used to provide seat position information.

The folding seat control module supplies a 10 V reference voltage through one circuit while the other circuit is the signal circuit. As the motor runs the sensor provides 4 pulses per revolution which it uses to determine when the motor has reached a stalled condition. A stall condition is caused by the seat back being fully folded, by being unfolded in the upright position, or by an object in the seat's path preventing movement. If the module does not detect a pulse from the sensor for 100 ms it will cease the folding seat operation.

Folding Seat Operation

With the vehicle transmission in the park position, the folding seat will operate in either dual mode or single mode. The normal operating mode is the dual seat mode where both sides of the 60/40 seat can move individually or at the same time.

Single seat mode is entered during a requested operation when the system voltage drops below 10.5 V. It allows only one side of the 60/40 seat to be folded at a time until the requested operation is complete. Once the operation is completed, additional switch inputs will be ignored until the voltage level returns to its normal range. In all cases the 60 seat operation will have priority over the 40 seat operation.

When a switch is activated, battery voltage is applied to the associated input signal to the control module. This wakes the module up out of its low power state and begins to execute the requested seat movement.

First, the control module operates the folding seat back release motor in the pull state, refer to Folding Seat Motor – Seat Back Release above, until it considers the seat is unlatched as determined either monitoring motor current for a stall condition or a 1.5 s time-out. Once the seat is considered unlatched the control module maintains the release motor in the hold state to keep the latch pin disengaged from the seat.

Once the release motor is in the hold state, the control module powers the folding seat motor in the appropriate direction to fold or un-fold the seat based on which switch inputs are active. While the seat motor is active the control module monitors the folding seat sensor for a stall condition, switch inputs for a transition from the active to the inactive state, excessive motor current, and the time the motor is active.

The seat will continue to move until the control module determines that either the customer has released the switch, the folding seat sensor indicates that the folding seat motor is in a stall condition, excessive motor current is detected, or the current seat movement is taking an excessive amount of time to execute for the given system voltage and operating temperature. When any of these conditions are detected the control module turns off the seat motor, then releases the motor allowing the motor's spring to drive the latch pin back into the lock position. The control module then executes a seat parking operation.

To execute seat parking, one second after the release motor is released, the seat shall move in the opposite direction of travel to confirm the latch is locked. This seat movement will occur until a stall condition is detected or 400 ms have passed. Then to relieve any tension in the seat structure that may have occurred due to the latch confirmation, the seat will move in the opposite direction for a specified amount of travel or after 100 ms have passed.

The module will power down to its low power state when all the switches appear inactive and all the outputs have been inactive for 30 s.

Power Seats System Description and Operation (2nd Row)

The left and right 2nd row folding seat systems each consist of the following components:

- Folding seat switch
- Folding seat motor

The folding 2nd row seats are operated from the folding seat switches located on the passenger side rear panel and on the trim panel in the rear cargo area. Battery voltage is supplied at all times to the folding seat switches through the park enable relay while in a de-energized state. Battery voltage is also supplied at all times to the folding seat motors through a 20 A fuse located in the rear body fuse block. When a folding seat switch is pressed, battery voltage is applied through the switch contacts and the control circuit to the folding seat motor. The motor runs to move the seat back to the folded position.

Seat Heating and Cooling

Schematic and Routing Diagrams

Heated/Cooled Seat Schematics (Front Seat Heating Control Module Power, Ground, Serial Data, and Controls (KA1 / KQV))

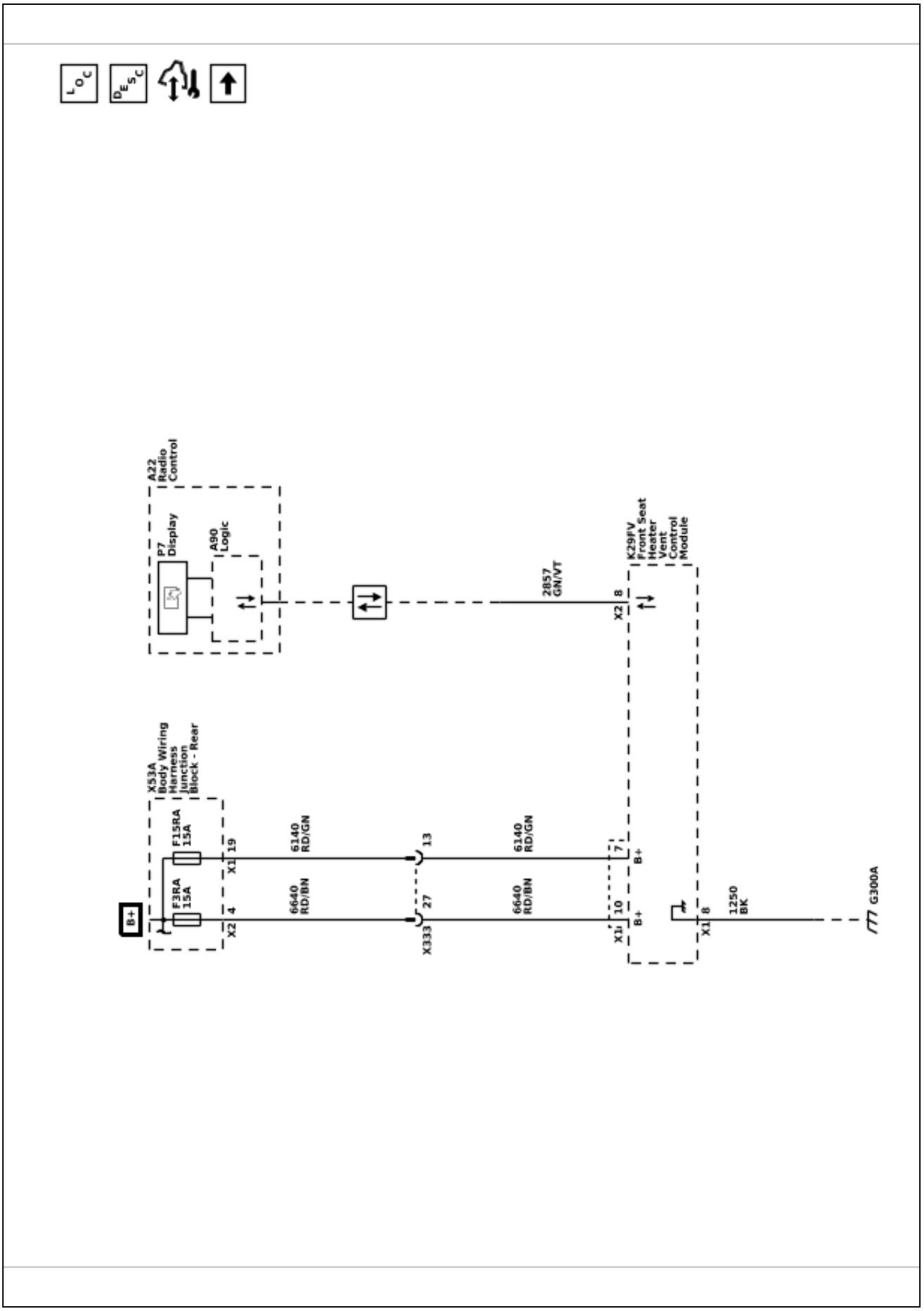

Heated/Cooled Seat Schematics (Heated Seat Elements - Front (KA1 / KQV))

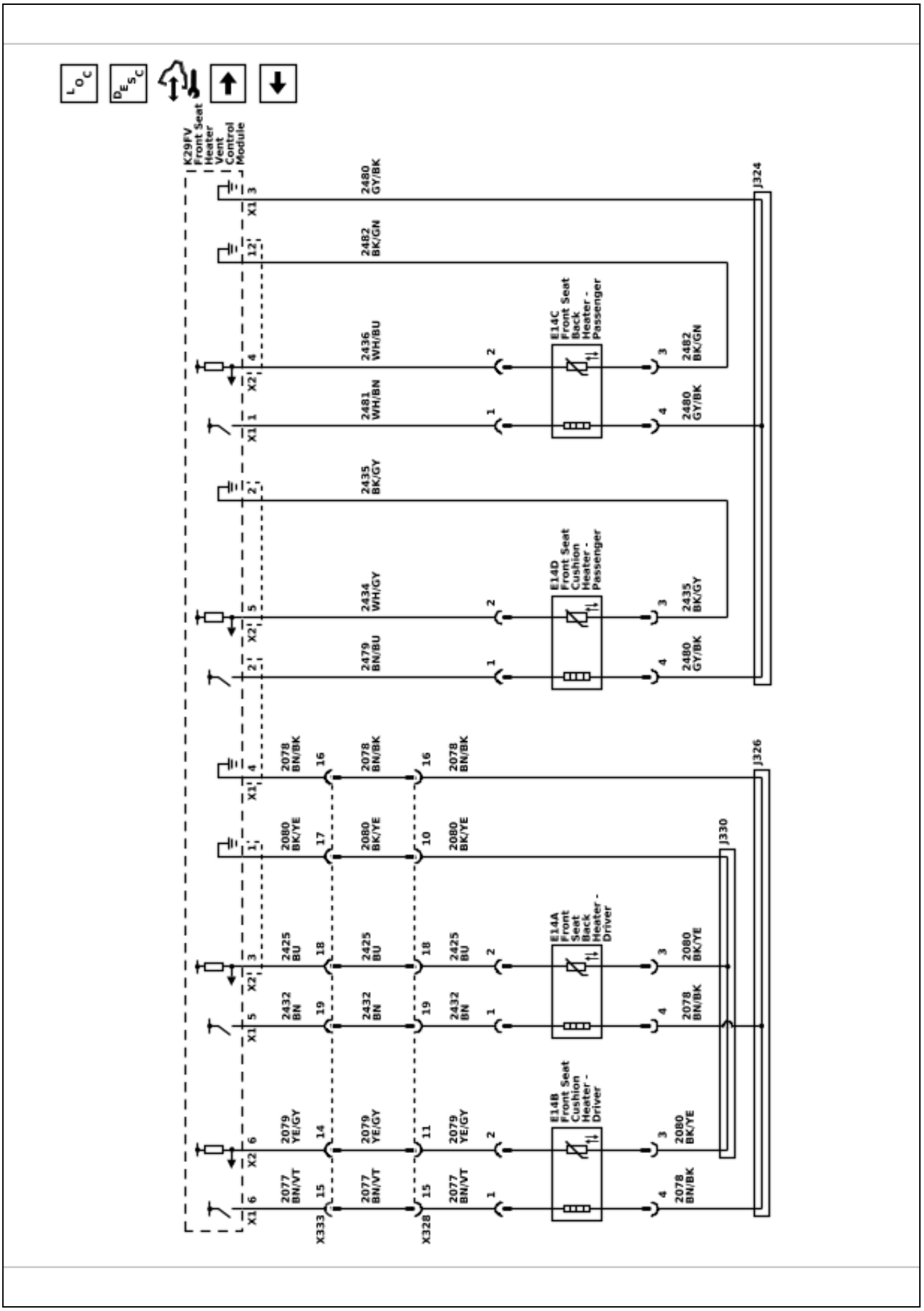

6613554

6613555

Heated/Cooled Seat Schematics (Vented Driver Seat (KQV))

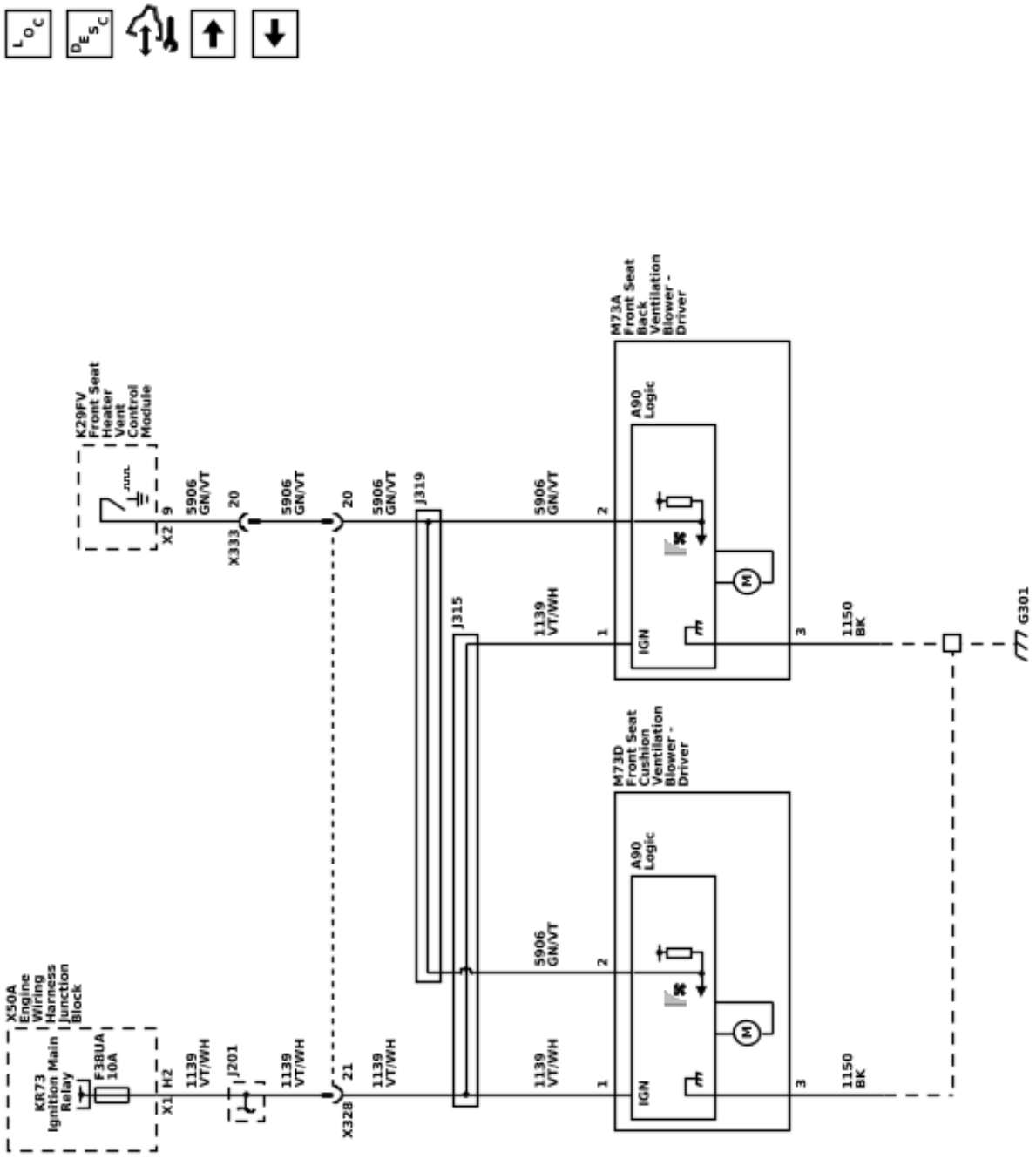

6613556

Heated/Cooled Seat Schematics (Vented Passenger Seat (KQV))

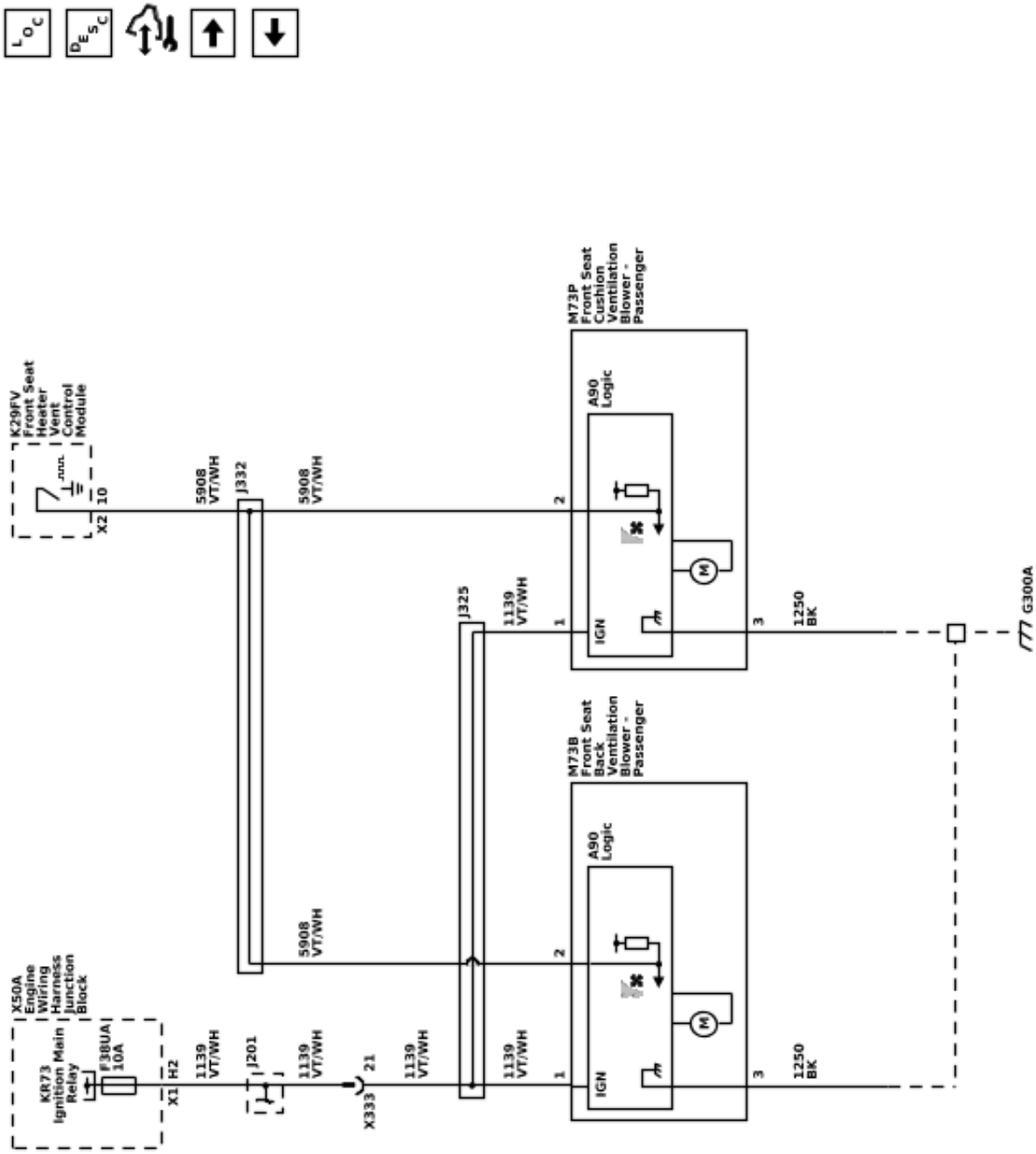

Heated/Cooled Seat Schematics (Rear Seat Heating Control Module Power, Ground, Serial Data, and Controls (KA6))

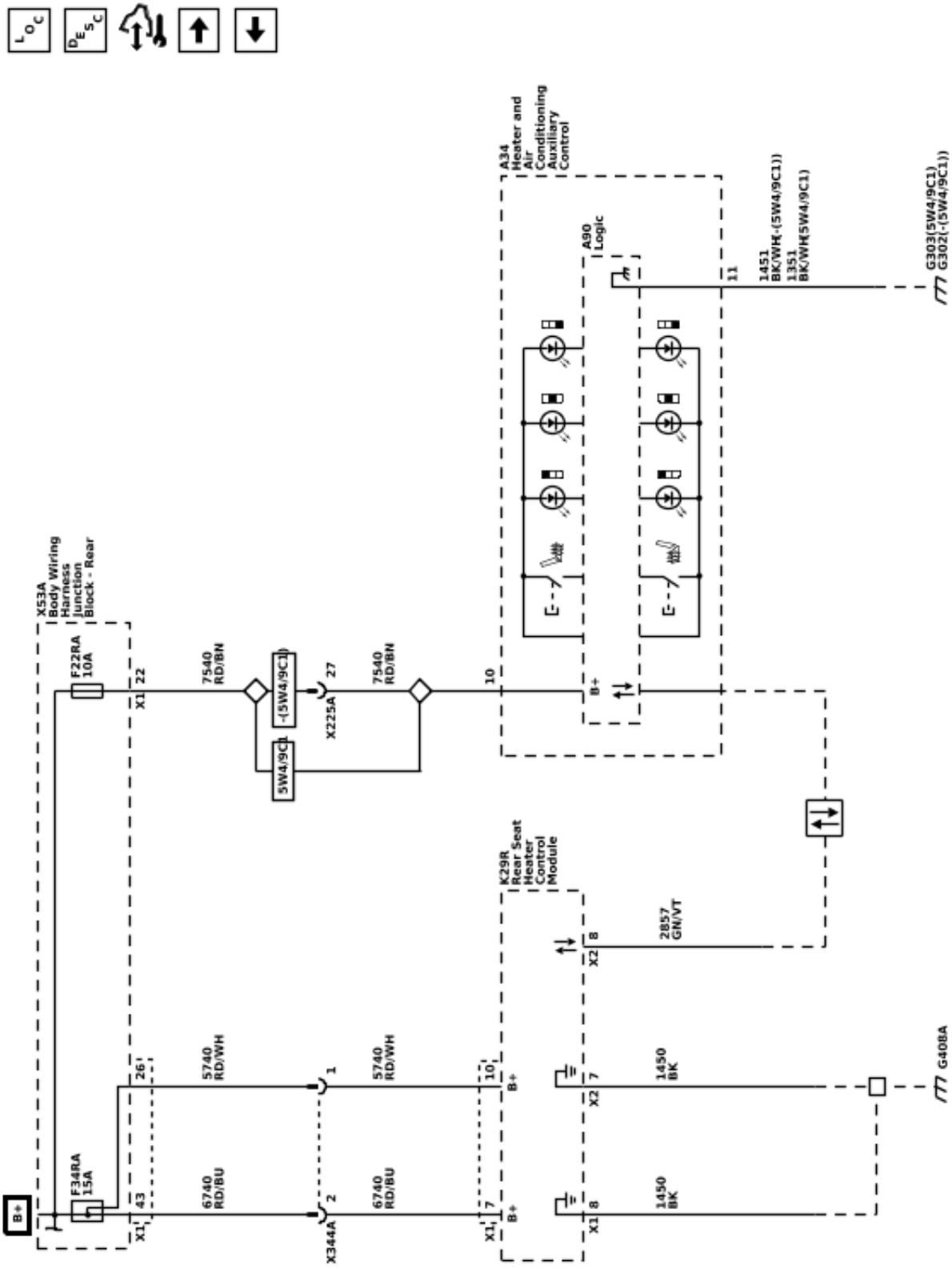

6613557

6613558

Heated/Cooled Seat Schematics (Rear Seat Heating Elements (KA6))

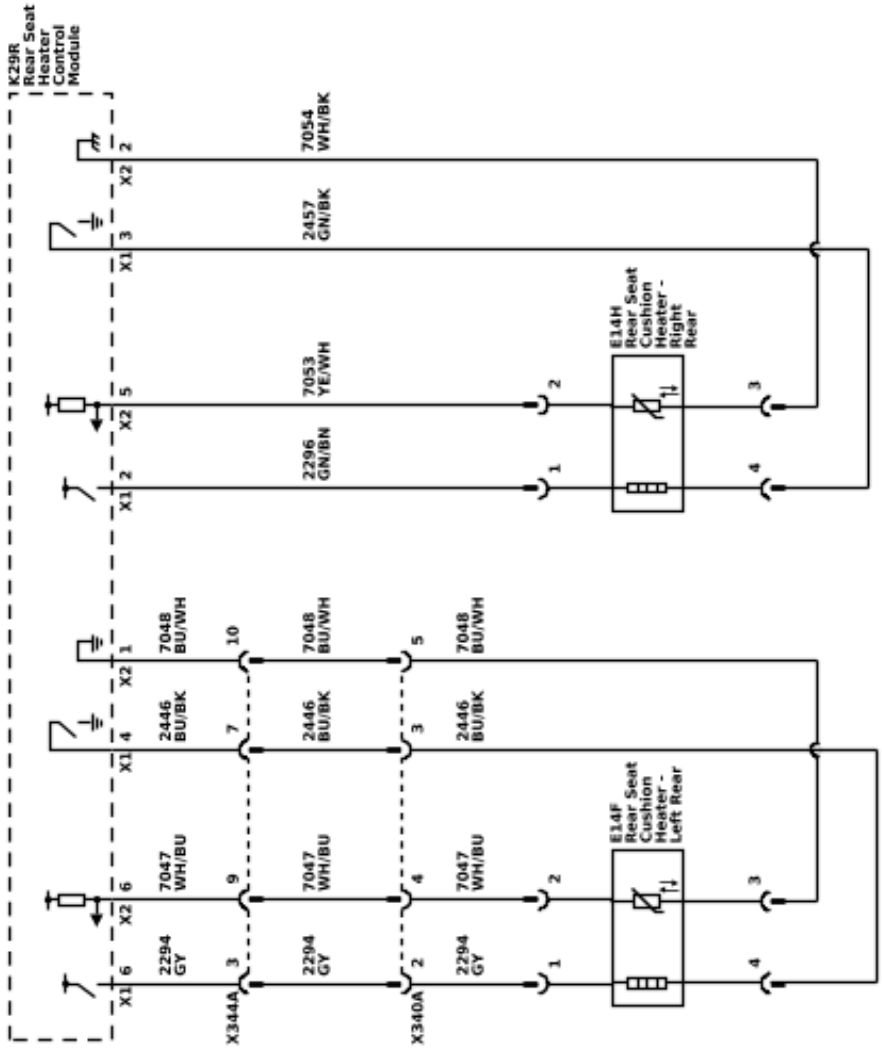

Description and Operation

Heated/Vented Seat Description and Operation

Heated and Vented Seat Components

The heated/vented seat system consists of the following components:

- Heated and vented seat switches
- Body control module
- Seat Heater Vent Control Module
- Driver seat cushion heating element
- Driver seat cushion temperature sensor
- Driver seat back heating element
- Driver seat back temperature sensor
- Driver seat cushion blower motor
- Driver seat back blower motor
- Passenger seat cushion heating element
- Passenger seat cushion temperature sensor
- Passenger seat back heating element
- Passenger seat back temperature sensor
- Passenger seat cushion blower motor
- Passenger seat back blower motor

Heated/Vented Seat Switches

The driver and passenger heated and vented seats are operated through the A22 Radio Control. The BCM is the heated and vented seat system master. It monitors heated/vented seat switch activations to determine user requested operating mode. Based on the requested operating mode, the BCM sends a LIN Bus serial data message to the Seat Heater Vent Control Module how to drive the self-regulated heating pads or ventilation motors. The BCM also controls the indicators used to provide the operator with feedback as to the operating status of the system. With each press of the switch, the system will cycle through High, Medium, Low, and then back to Off again. The BCM also controls the seat temperature and mode indicators, via the serial data line, used to provide the operator with feedback as to the operating status of the system.

Heated Seat Operation

The Seat Heater Vent Control Module controls heated seat operation for the driver and passenger seats. When active, power is applied to the seat cushion and back heater elements through a common pulse width modulated (PWM) voltage supply control circuit. Each individual heater element is switched to ground by the module through a common low side drive control circuit.

When inactive the Seat Heater Vent Control Module connects the heating element low side outputs to a common reference point internal to the module which is biased to approximately 3.5 V. The module uses this biased voltage in order to check the high side and low side control circuits for a short to battery or ground before enabling the driver and passenger seat heating elements. During heated seat operation, the Seat Heater Vent Control Module interrupts control of the heating elements every 10 s for approximately 10 ms to make this biased voltage check.

With both the seat cushion and seat back heater elements disconnected, if the high side output of the module is measured it will display a low current 12 V bleed off voltage. This bleed off voltage does not have a meaningful diagnostic purpose. With one or both of the heater elements connected you would just see the 3.5 V biased voltage from this circuit.

Temperature Regulation

The seat back and cushion temperature sensors (thermistors) are packaged with the seat heating elements located just under the seat covers. The Seat Heater Vent Control Module supplies each temperature sensor with a 5 V reference signal circuit and a low reference circuit. The module monitors the voltage from the signal circuit to determine the temperature of the seat.

The temperature sensor varies in resistance based on the temperature of the heating element causing the signal voltage to change. Once the module senses the seat reached the set temperature, it will then begin regulate the current flow through the heater elements in order to maintain the desired seat temperature based on the feedback voltage from the sensor.

If the heated seats are on high, the temperature level may automatically be lowered after approximately 30 min of operation.

Front Vented Seat Operation

Each vented seat consists of 2 blower motors blower motors; one in the seat back and one in the seat cushion. During vented seat operation, the vented seat blower motors move cabin air through channels in the foam pad and small holes in the seat covers causing a cooling effect to the occupant.

With the Vehicle ON, battery voltage from the ignition main relay is applied through a 10 A fuse located in the rear body fuse block to the seat cushion and seat back blower motors. Ground for each blower motor is provided through separate ground circuits and a common ground connection.

When the Seat Heater Vent Control Module receives a ventilation seat command, it sends a low side drive pulse width modulation (PWM) signal through the blower motor control circuit to the seat back and cushion blower motors indicating the seat ventilation command. The logic in the blower motors sets the blower speed to the switch set point. The blower motors run causing a cooling effect to the occupant.

Auto Heated Seat Operation with Vehicle ON

Refer to Heated and Ventilated Front Seats and Vehicle Personalization in the Owner's Manual for information regarding Auto Heated and Ventilation Seat operation.

Heated and Cooled Seat Operation During Remote Start

Refer to Vehicle Personalization in the Owner's Manual for Remote Start Auto Heated and Ventilation Seats.

During remote start, the heated seats will turn ON when the ambient temperature is below 10° C (50° F).

During remote start, the seat ventilation system will turn ON when the ambient temperature is above 27° C (80° F).

Load Shed Management

The electrical power management function is designed to monitor the vehicle electrical load and determine when the battery is potentially in a high discharge condition. The heated seat system is one of the vehicle loads that is subject to reduction during a battery discharge condition. For more information on load management refer to *Electrical Power Management Description and Operation 4-11*.

Rear Heated Seats Description and Operation

Heated Seat Components

The rear heated seat system consists of the following components:

- Rear heated seat switches
- Body control module
- Rear seat heating control module
- Left rear seat cushion heating element
- Left rear seat cushion temperature sensor
- Right rear seat cushion heating element
- Right rear seat cushion temperature sensor

Heated Seat Switches

When a heated seat switch is pressed, a serial data message is sent to the body control module (BCM) indicating the heated seat command. The BCM serves as the heated seat system master to determine the requested operating mode. The BCM then sends a LIN bus serial data message to the Rear Seat Heater Vent Control Module indicating the heated seat command. In response to this message, the Rear Seat Heater Vent Control Module attempts to drive the appropriate seat heating element per the BCM command.

Rear Heated Seat Operation

The Rear Seat Heater Vent Control Module controls heated seat operation for the left and right rear seats. When active, power is applied to the seat cushion and back heater elements through a pulse width modulated (PWM) voltage supply control circuit. Each individual heater element is switched to ground by the module through a low side drive control circuit.

When inactive the Rear Seat Heater Vent Control Module connects the heating element low side outputs to a common reference point internal to the control module which is biased to approximately 3.5 V. The control module uses this biased voltage in order to check the high side and low side control circuits for a short to battery or ground before enabling either the left or right rear seat heating element. During heated seat operation, the control module interrupts control of the heating elements every 10 s for approximately 10 ms to make this biased voltage check.

Temperature Regulation

The seat cushion temperature sensor (thermistors) is packaged with the seat heating element located just under the seat cover. The Rear Seat Heater Vent Control Module supplies the temperature sensor with a 5 V reference signal circuit and a low reference circuit. The control module monitors the voltage from the signal circuit to determine the temperature of the seat.

The temperature sensor varies in resistance based on the temperature of the heating element causing the signal voltage to change. Once the Rear Seat Heater Vent Control Module senses the seat reached the set temperature, it will then begin regulating the current flow through the heater elements in order to maintain the desired seat temperature based on the feedback voltage from the sensor.

The temperature level may automatically be lowered after approximately 30 min of operation.

Load Shed Management

The electrical power management function is designed to monitor the vehicle electrical load and determine when the battery is potentially in a high discharge condition. The heated seat system is one of the vehicle loads that is subject to reduction during a battery discharge condition. For more information on load management refer to *Electrical Power Management Description and Operation 4-11*.

Section 9

Steering

Power Steering **9-2**
Schematic and Routing Diagrams **9-2**
Power Steering Schematics 9-3
Description and Operation **9-4**
Power Steering System Description and Operation 9-4
Steering Wheel and Column **9-5**
Schematic and Routing Diagrams **9-5**
Steering Wheel Schematics 9-6
Column Lock Schematics 9-8
Tilt/Telescoping Steering Column Schematics 9-9
Description and Operation **9-10**
Steering Wheel and Column Description and Operation 9-10

Steering

Power Steering

Schematic and Routing Diagrams

6613559

Power Steering Schematics (Electric Power Steering)

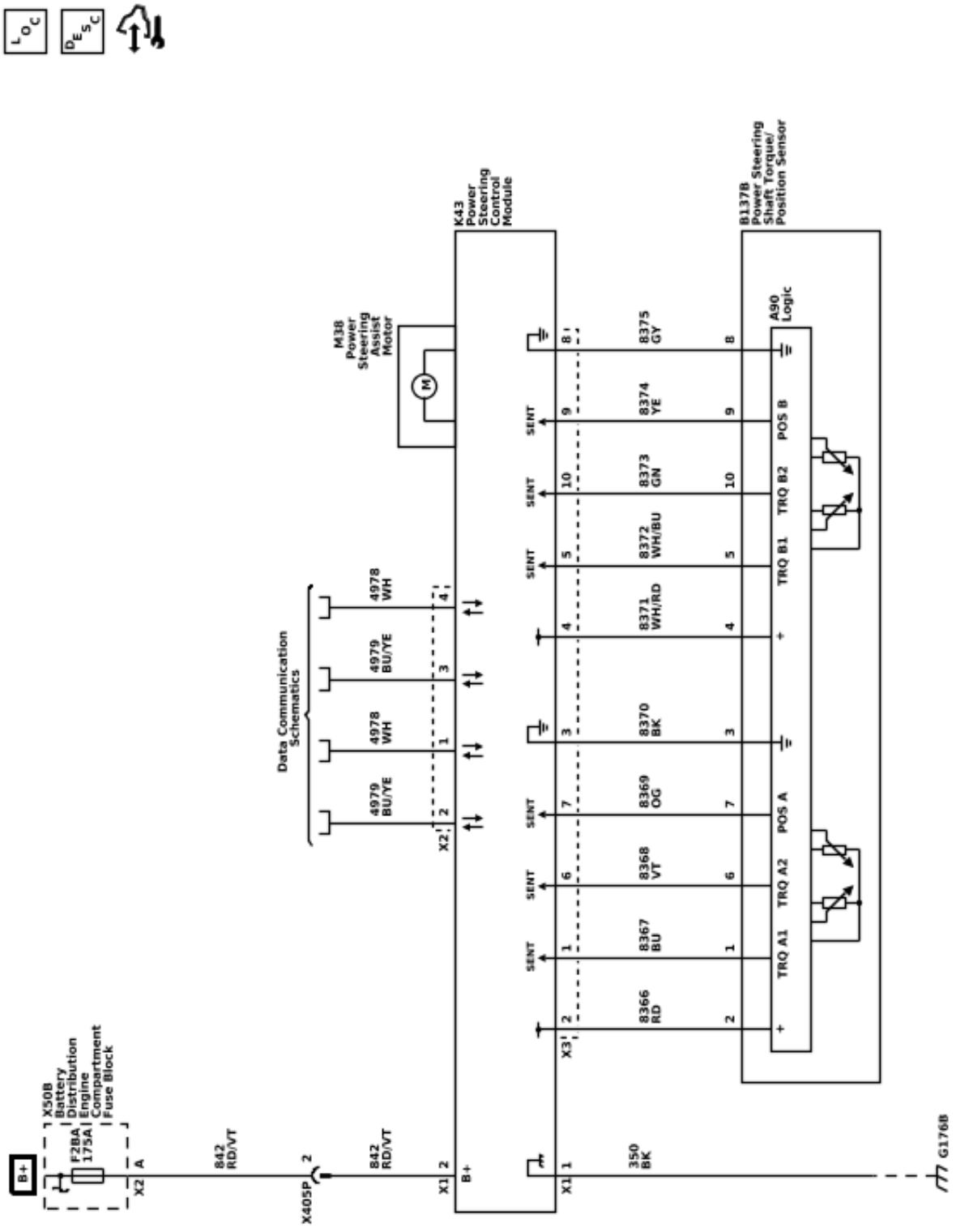

Description and Operation

Power Steering System Description and Operation

The power steering system consists of the following components:

- The power steering control module
- The power steering motor
- The power steering shaft torque/position sensor
- The steering gear (rack and dual pinion)

The rack and dual pinion electric power steering system reduces the amount of effort needed to steer the vehicle utilizing the power steering control module to control the power steering motor to maneuver the steering gear. The power steering control module also uses a combination of the shaft torque, position sensor, battery voltage, vehicle speed and engine speed via CAN serial data circuit to perform the system functions. Refer to *Data Communication Schematics 6-3* for vehicle CAN configuration. At low speeds more assist is provided for easy turning during parking maneuvers. At higher speeds less assist is provided for improved road feel and directional stability.

The power steering control module uses a combination of the shaft torque, position sensor, vehicle speed, and calculated system temperature inputs to determine the amount of assist needed. The power steering control module continuously monitors the digital torque sensor's torque and index current signals. As the steering wheel is turned and torsional twist is applied to the steering shaft, the steering input and output shafts are monitored via the torque signal circuit and then processed by the power steering control module to calculate the steering torque. The voltage signals of the motor position sensor and the digital torque sensor's index current signal are both processed by the power steering control module to detect and calculate the steering wheel angle.

The power steering control module responds to the change in the digital torque sensor signals as well as the motor shaft torque/position sensor's voltage signals by commanding current to the power steering motor. The power steering control module controls the pulse width modulated motor drive circuit to drive the 3-phase motor. The power steering control module and motor assembly is attached to the base of the steering gear housing and assists the steering gear pinion to maneuver the rack from left to right according to turning the steering wheel.

The power steering control module has the ability to calculate an internal system temperature to protect the power steering system from damage caused by high temperature. To reduce a high system temperature, the power steering control module will reduce the amount of current commanded to the power steering motor, which reduces the amount of steering assist. The power steering control module has the ability to detect malfunctions within the electric power steering system. Any malfunction detected that disables steering assist will cause the SERVICE POWER STEERING message to be displayed on the driver information center.

Steering Wheel and Column

Schematic and Routing Diagrams

6613560

Steering Wheel Schematics (Heated Steering Wheel (KI3 - UKL))

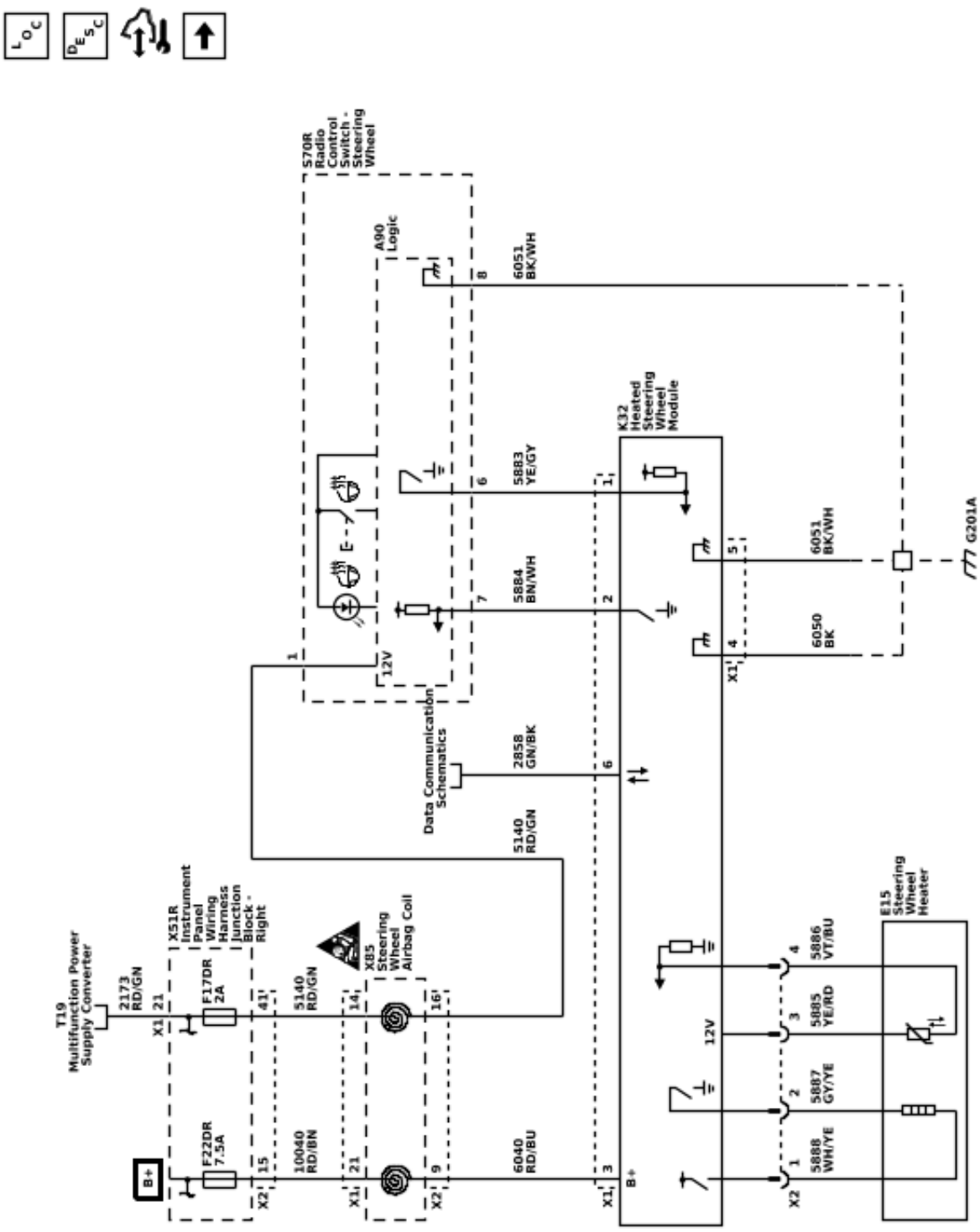

6613561

Steering Wheel Schematics (Heated Steering Wheel (KI3 & UKL))

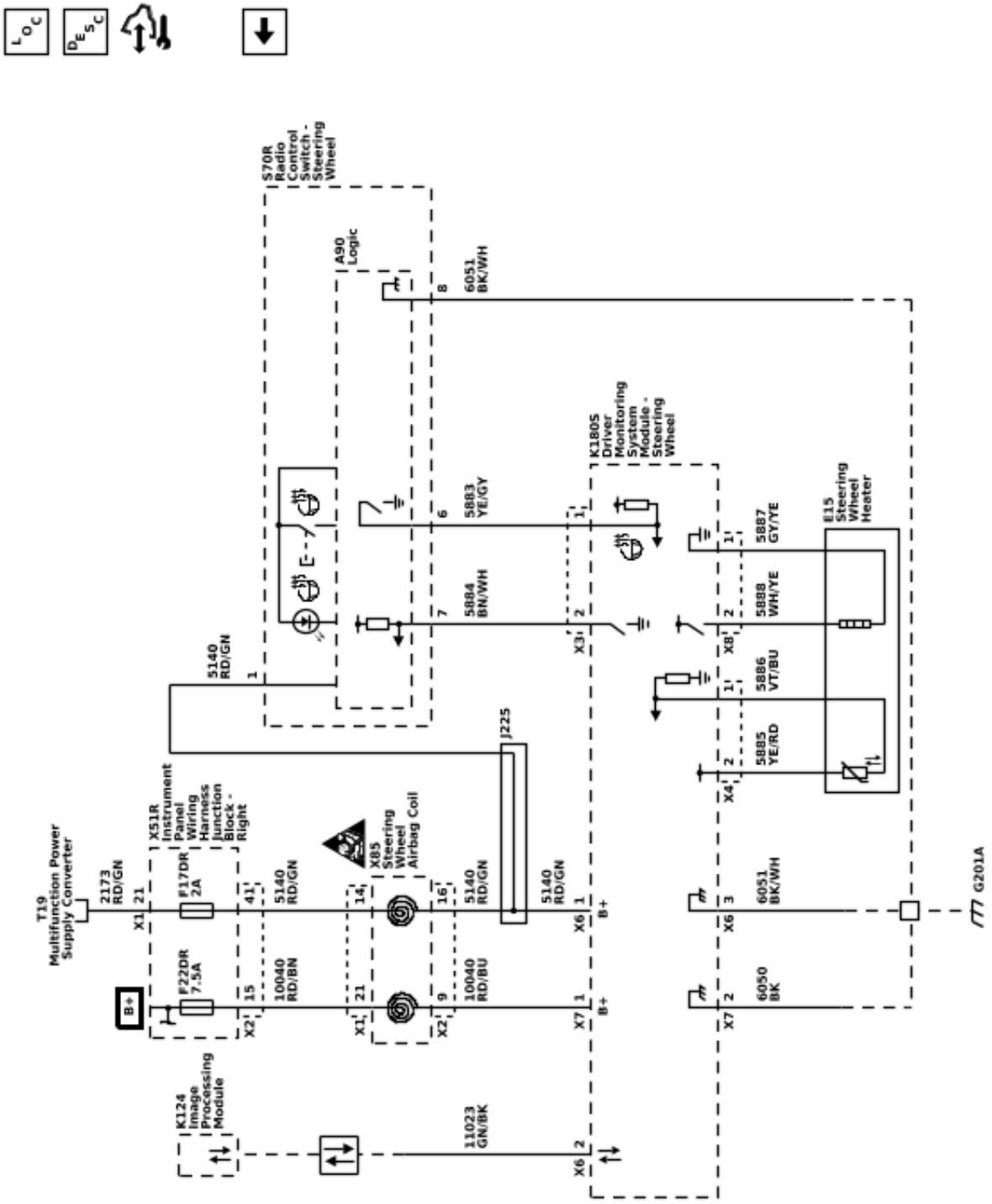

6613562

Column Lock Schematics (Steering Column Lock)

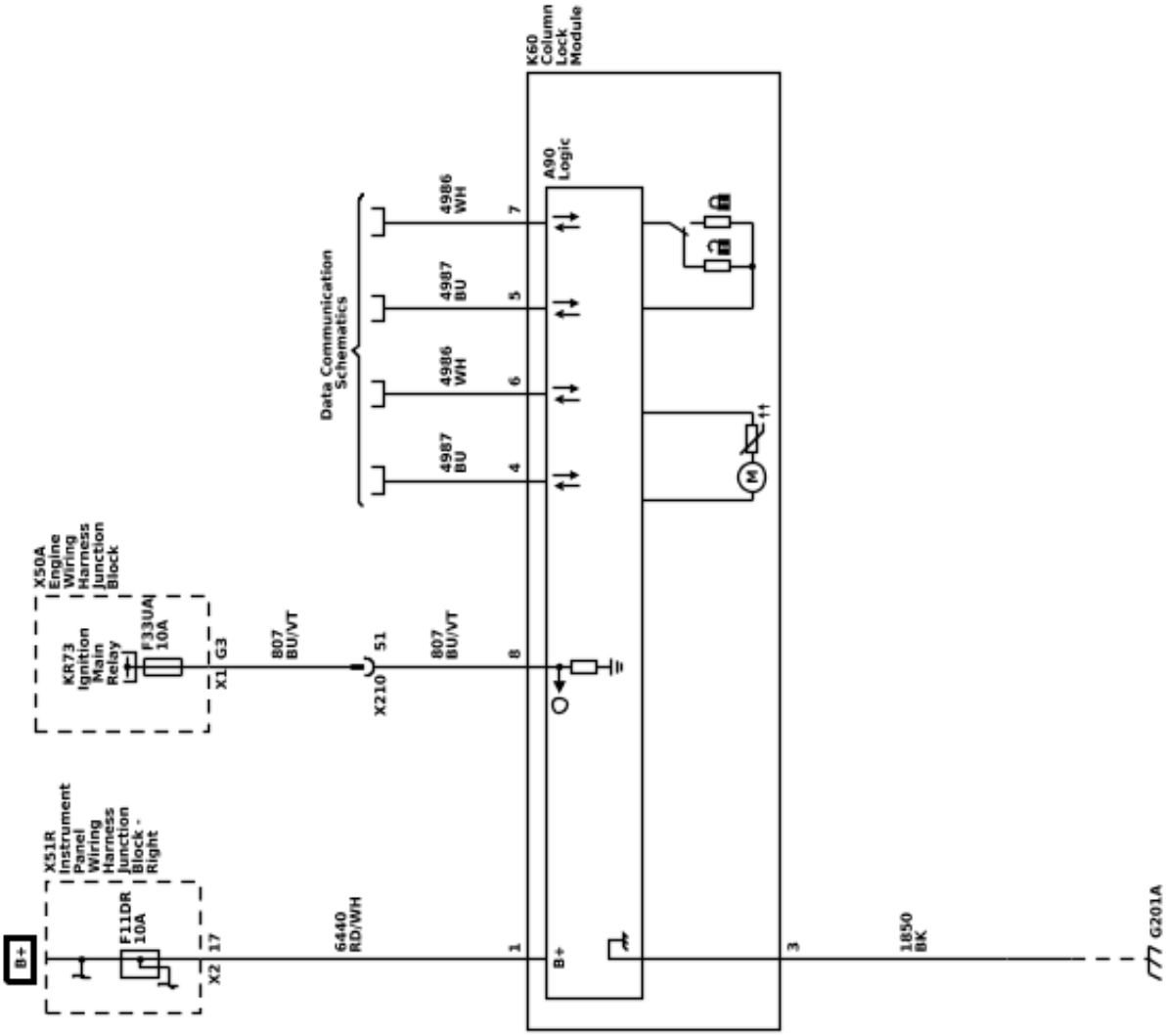

6613563

Tilt/Telescoping Steering Column Schematics (Tilt/Telescoping Steering Column (N38))

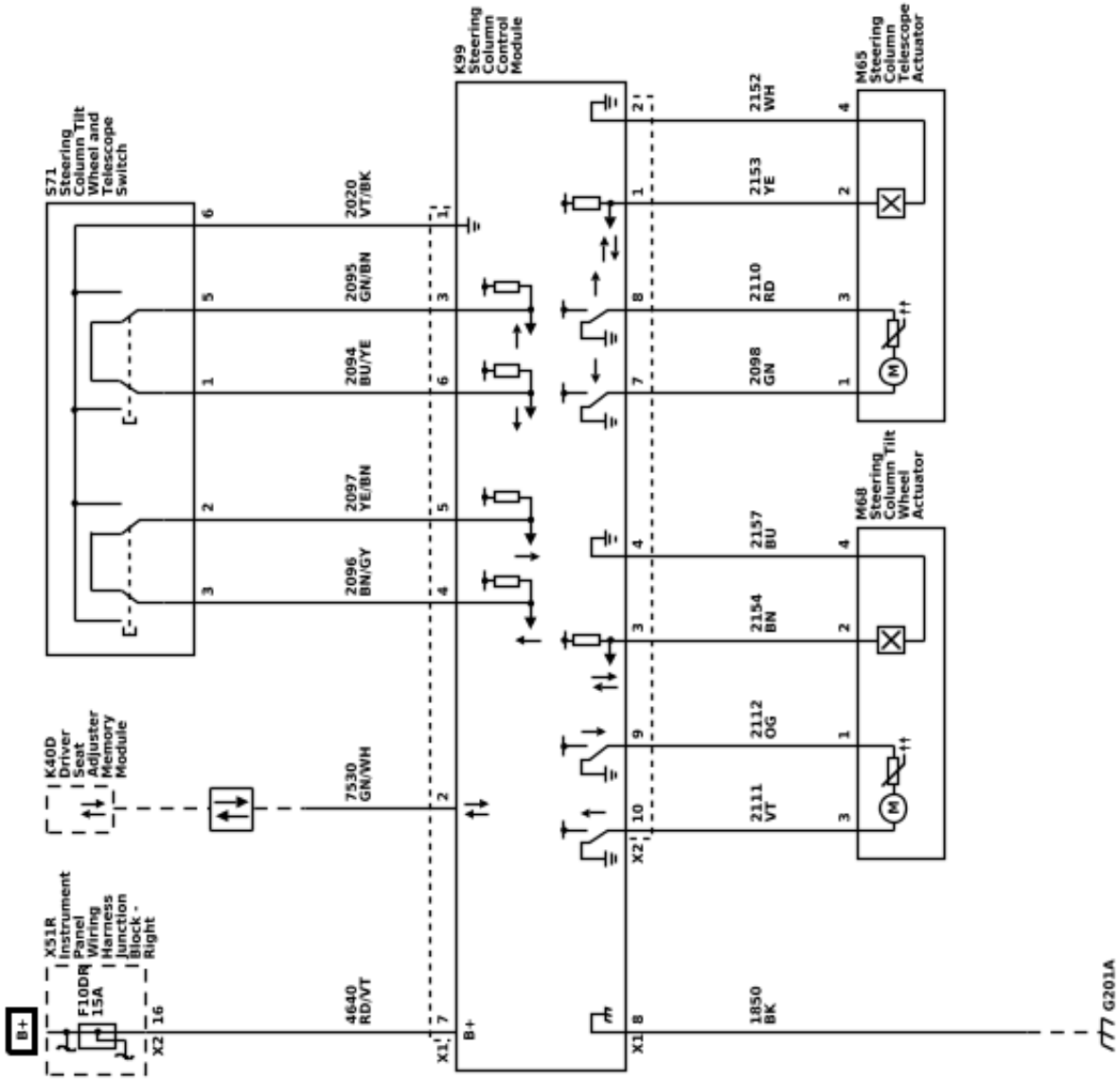

Description and Operation

Steering Wheel and Column Description and Operation

Column Lock (if equipped)

The Column Lock Module (CLM) controls the steering wheel theft deterrent lock function, which allows the column to be electronically locked. When a valid key is used to start the vehicle, the BCM recognizes this and will send the encrypted password to the CLM. The CLM will compare its own stored password to the encrypted password sent by the BCM. If the data matches, the steering column will be unlocked.

In order for the steering column to be locked the CLM has to see 3 inputs.

1. The BCM power mode is OFF.
2. The vehicle is stationary based on zero speed reported from all ABS wheel speed sensors.
3. The driver door is reported open by the BCM.

When the CLM receives these inputs, the steering column will be locked.

The CLM monitors the column lock system and will set DTC codes when the module detects malfunctions within the system. When a malfunction occurs the driver information center (DIC) will display the Service Column Lock Now message indicating DTC codes are set within the CLM. The immobilizer system will prevent vehicle starting if there is a fault or no communication with the CLM.

Tilt/Telescoping Description (if equipped)

The steering column has a tilt/telescoping control system that consists of an electronic control module capable of LIN message communication, a steering column power assembly with positioning actuators and sensors, and a steering column control switch.

Column Position Module has two versions of operation:

1. N38 – Power Steering Column-Tilt/Telescope, and A45 – Memory Seats

   The column position module will wake up either by the LIN bus or by the tilt/telescope steering column switch. The memory seat module is the master and column position module is the slave. All DTCs and the data from column position module are reported through the LIN bus and stored in the memory seat module.

2. N38 – Power Steering Column-Tilt/Telescope Only

   The column position module will wake up with the tilt/telescope steering column switch. No DTCs or data is available. Vehicle symptoms will cause the customer to bring the vehicle in for service.

Tilt/Telescoping Switch Operation

The tilt/telescope steering column has a four-position switch. The switch may be used to adjust the position of the steering wheel in or out which is telescope and up or down which is tilt. The position of the column may be changed as follows:

- Press the switch up to tilt the column up.
- Press the switch down to tilt the column down.
- Press the switch forward and the column moves toward the front of the vehicle.
- Press the switch rearward and the column moves toward the rear of the vehicle.

Actuators

Both the tilt and telescoping actuators are reversible. For example, the tilt actuator moves the column both up and down. When the column position module receives an input to move the column up, the column position module supplies battery positive voltage and ground to the tilt actuator in order to move the column up. When the column position module receives a column down input, the column position module supplies battery positive voltage and ground to the same actuator, but with reverse polarity. When the voltage polarity is reversed, the actuator runs in the opposite direction and moves the column down.

Position Sensors with A45 Memory Seats

Two position sensors are Hall Effect sensors and are used by the column position module. The column position module provides a 5 V reference voltage and a ground to both the tilt and telescoping position sensors. The sensor feedback circuit voltage varies from 0–5 V. Each sensor is part of the actuator assembly. When the actuator rotates, the voltage of the sensor varies on the scan tool. The column position module monitors the feedback voltage to determine the column position.

Without the A45 Memory Seat option, scan tool data is not available.

Tilt/Telescoping Memory with A45 Memory Seats
Memory settings and the personalization of steering wheel positions are available with the tilt/telescoping steering column only with the A45 Memory Seat option. The data stored consists of entry positions and exit positions. The entry position is the position that the steering column moves in when the ignition is turned ON. The exit position is the direction that the steering column moves in when the ignition is turned OFF and the driver's door is opened. The memory seat module stores memory positions and commands column position module to move actuators to specific positions through a LIN message.

An initial memory setting is set in the memory seat module at the assembly plant. This setting may be changed by the customer at any time.

Without the A45 Memory Seat option, memory settings, personalization, and the entry and exit function is not available.

Driver Safety

The steering wheel and column has safety features to protect the driver. The following components may be mounted on or near the steering column:

Energy-Absorbing Steering Column: The energy-absorbing steering column compresses in the event of a front-end collision, which reduces the chance of injury to the driver. The energy-absorbing feature, collapsible steering shaft, and break away mounting features help reduce the injury in the event of an accident.

Heated Steering Wheel (if equipped)

The heated steering wheel system consists of a heated steering wheel, a heated steering wheel switch, and a steering wheel heat module. The heated steering wheel includes non-serviceable heating elements and a temperature sensor. The heating elements and sensor are located in the left and right sides of the rim of the steering wheel. The heated steering wheel switch is located in the left steering wheel control switch assembly. The steering wheel heat control module is located at the bottom of the steering wheel center hub. When the switch is pressed, the switch signal circuit is grounded and the heat module turns the heated steering wheel on. The system then remains on until the customer turns it off. The wheels normal operating temperature is 32°C (89.6°F). The wheel takes approximately 3 to 4 minutes to reach the normal operating temperature. The wheel will take longer to heat up if the vehicle temperature is below -21°C (-5.8°F). The built-in temperature sensor provides input to the controller to limit the temperature to the normal operating temperature. The wheel will not operate if the vehicle temperature is at or above 32°C (89.6°F).

The heated steering wheel control module is on the LIN bus. This allows the heated steering wheel to be activated during remote vehicle start.

For vehicles equipped with UKL, the K180S Driver Monitoring System Module controls the steering wheel heater, the steering wheel LED display and the steering wheel touch sensors. The K180S Driver Monitoring System Module - Steering Wheel is integral to the steering wheel and cannot be replaced by itself. The K180S Driver Monitoring System Module - Steering Wheel is also a LIN device to the K124 Image Processing Module.

Section 10

Transmission

Automatic Transmission - 10L80 ..... **10-2**
Schematic and Routing Diagrams **10-2**
Automatic Transmission Controls Schematics 10-3
Electronic Transmission Range Select **10-8**
Schematic and Routing Diagrams **10-8**
Electronic Transmission Range Selector Schematics 10-9
Transfer Case - MP 3015 ..... **10-11**
Schematic and Routing Diagrams **10-11**
Transfer Case Control Schematics 10-12
Description and Operation **10-15**
Transfer Case Description and Operation 10-15
Transfer Case - MP 3025 ..... **10-25**
Schematic and Routing Diagrams **10-25**
Transfer Case Control Schematics 10-26
Description and Operation **10-29**
Transfer Case Description and Operation 10-29

Transmission

Automatic Transmission - 10L80

Schematic and Routing Diagrams

Automatic Transmission Controls Schematics (Power, Ground, Serial Data, and MIL)

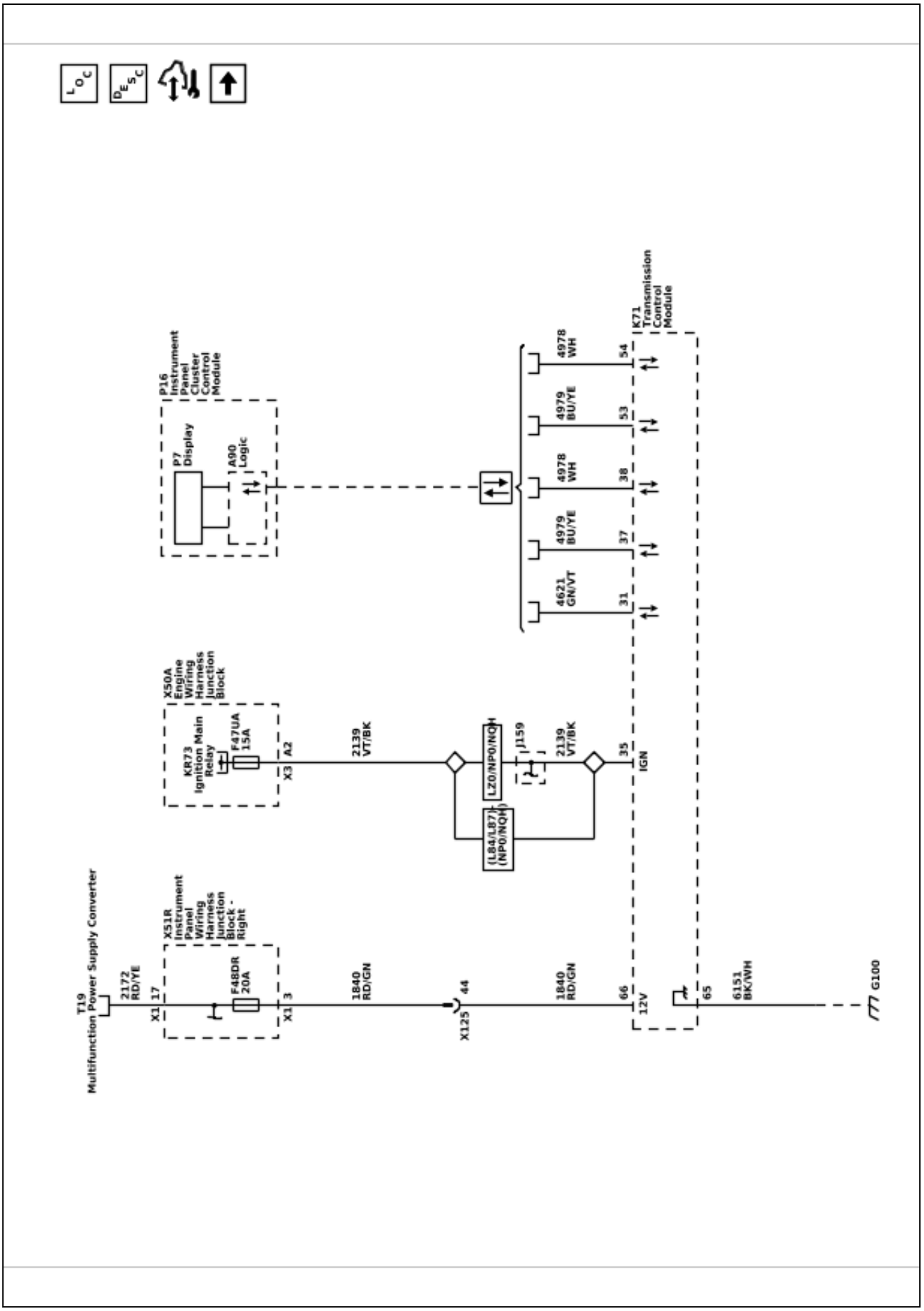

6613568

6613569

Automatic Transmission Controls Schematics (Pressure and Shift Controls 1 of 2)

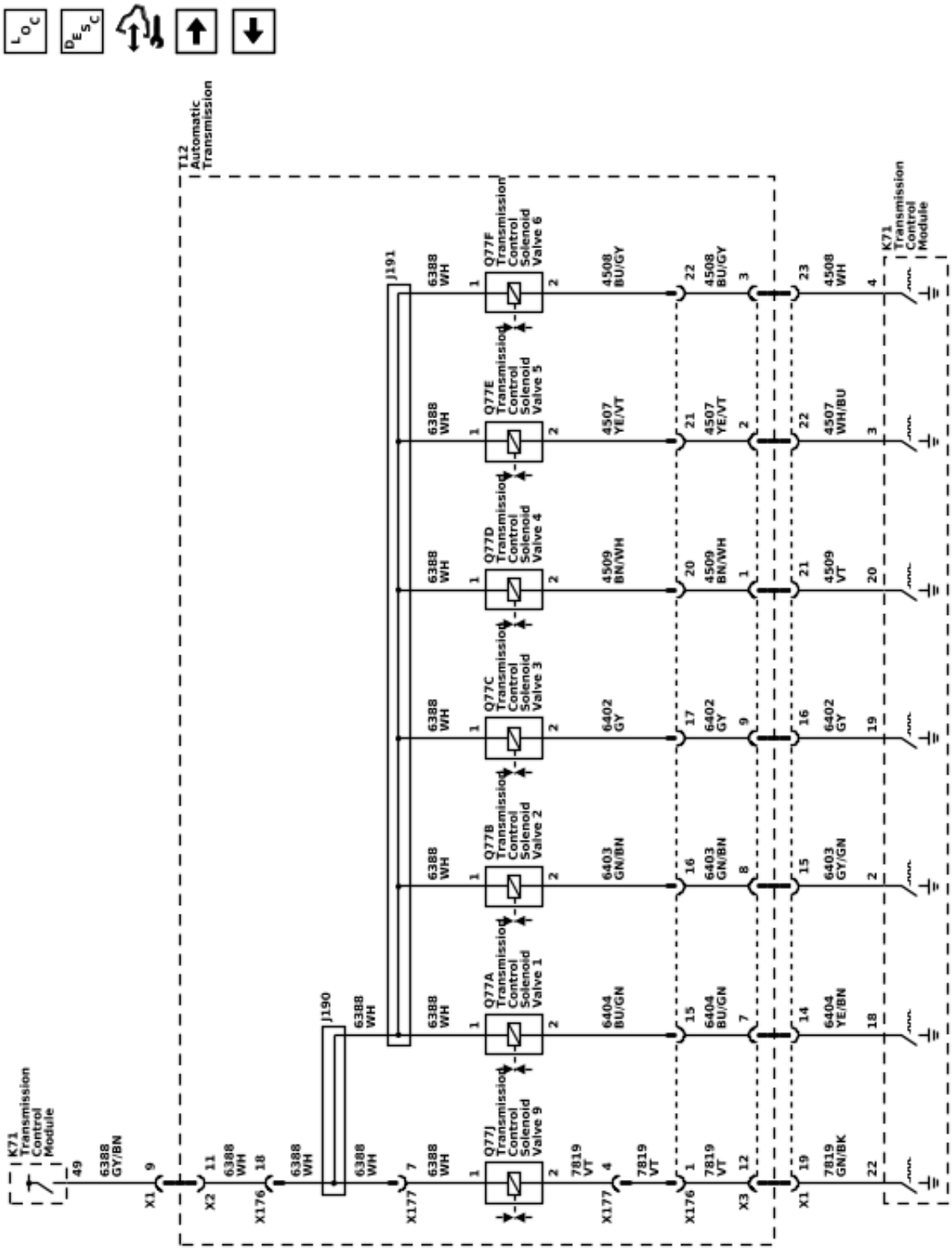

Automatic Transmission Controls Schematics (Pressure and Shift Controls 2 of 2)

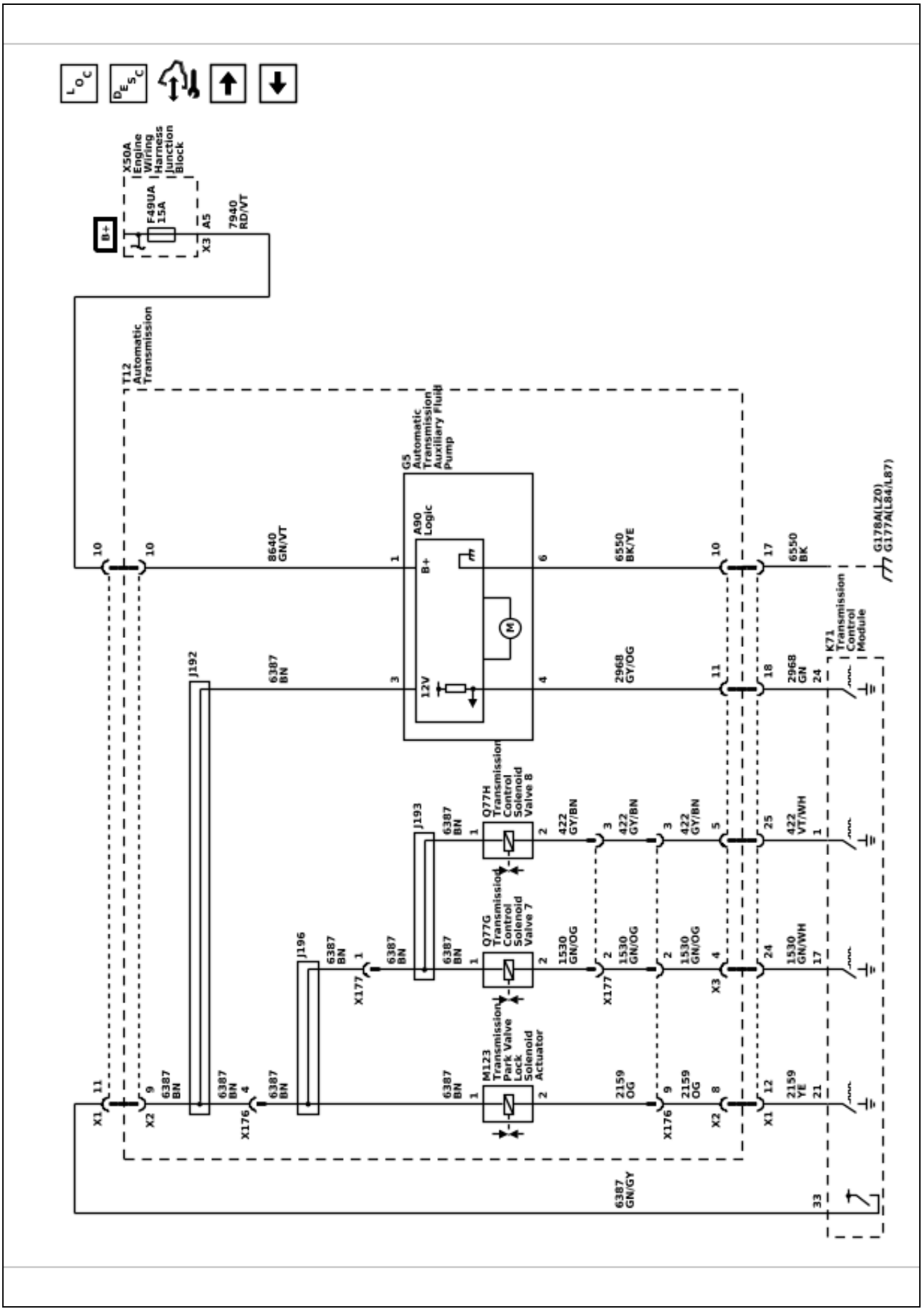

Automatic Transmission Controls Schematics (Speed, Temperature, and Park Valve Inputs)

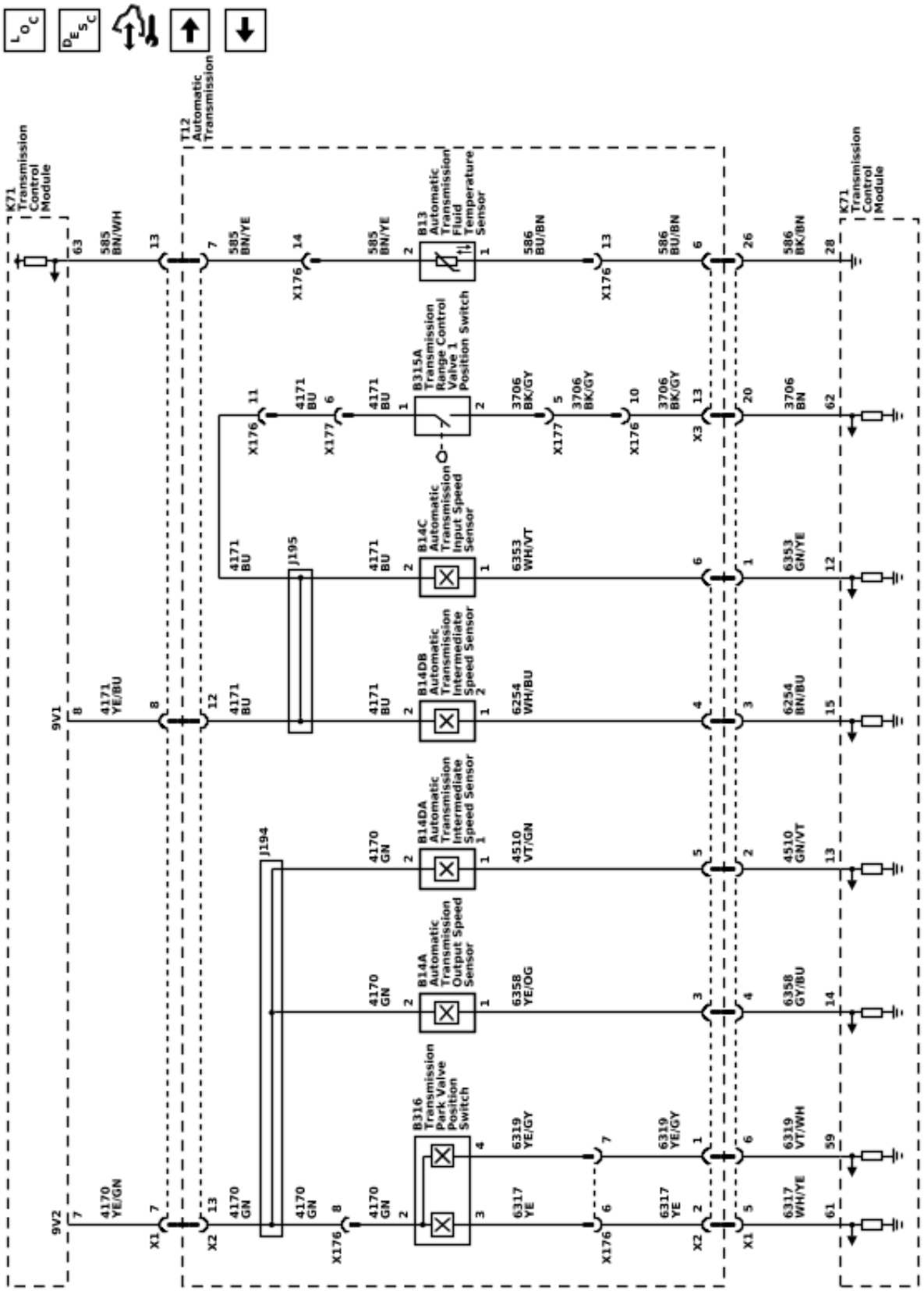

6613571

Automatic Transmission Controls Schematics (Tap Up/Tap Down Switches)

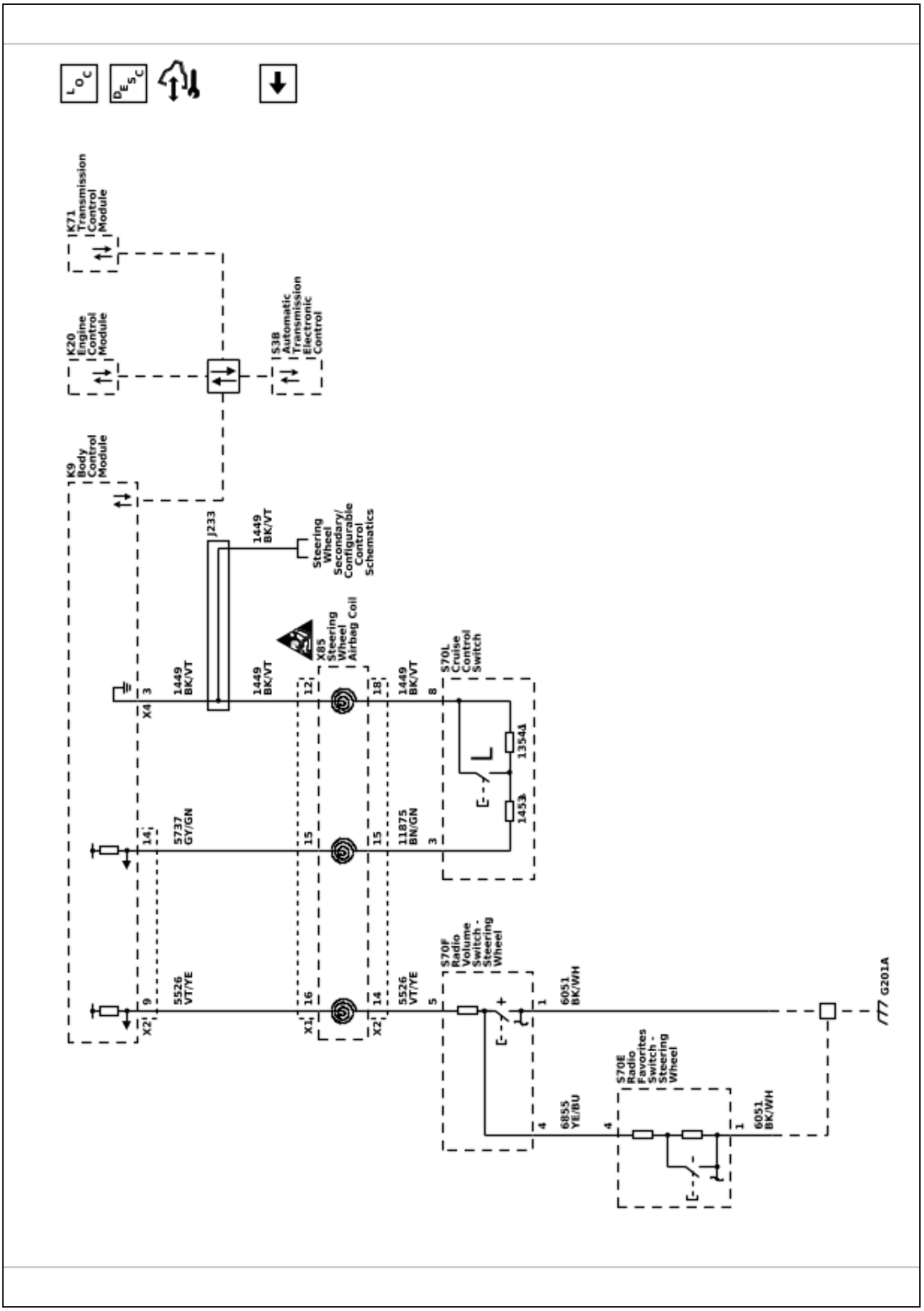

Electronic Transmission Range Select

Schematic and Routing Diagrams

6613573

Electronic Transmission Range Selector Schematics (Electronic Shift Controls (L84 / L87))

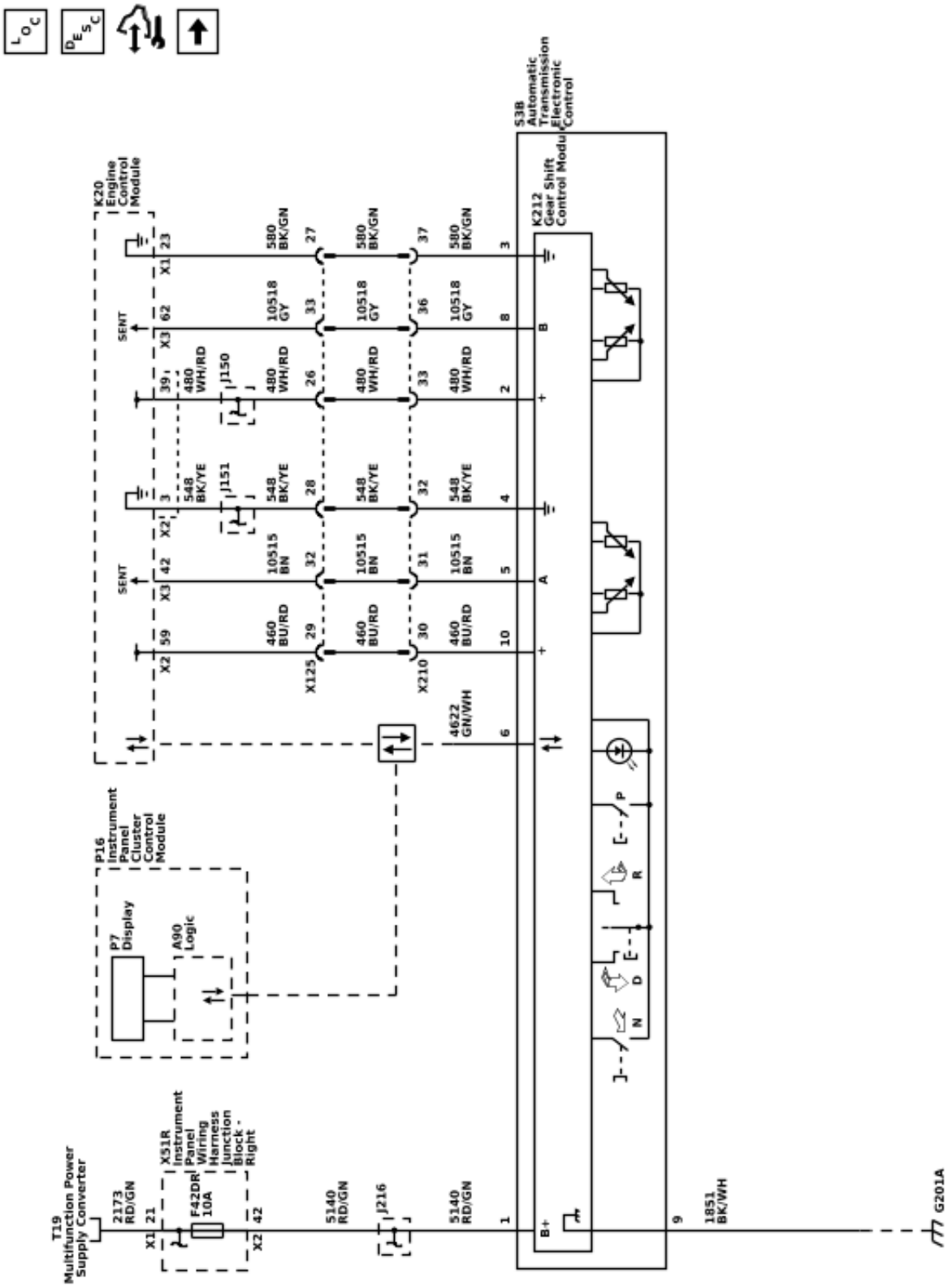

Electronic Transmission Range Selector Schematics (Electronic Shift Controls (LZ0))

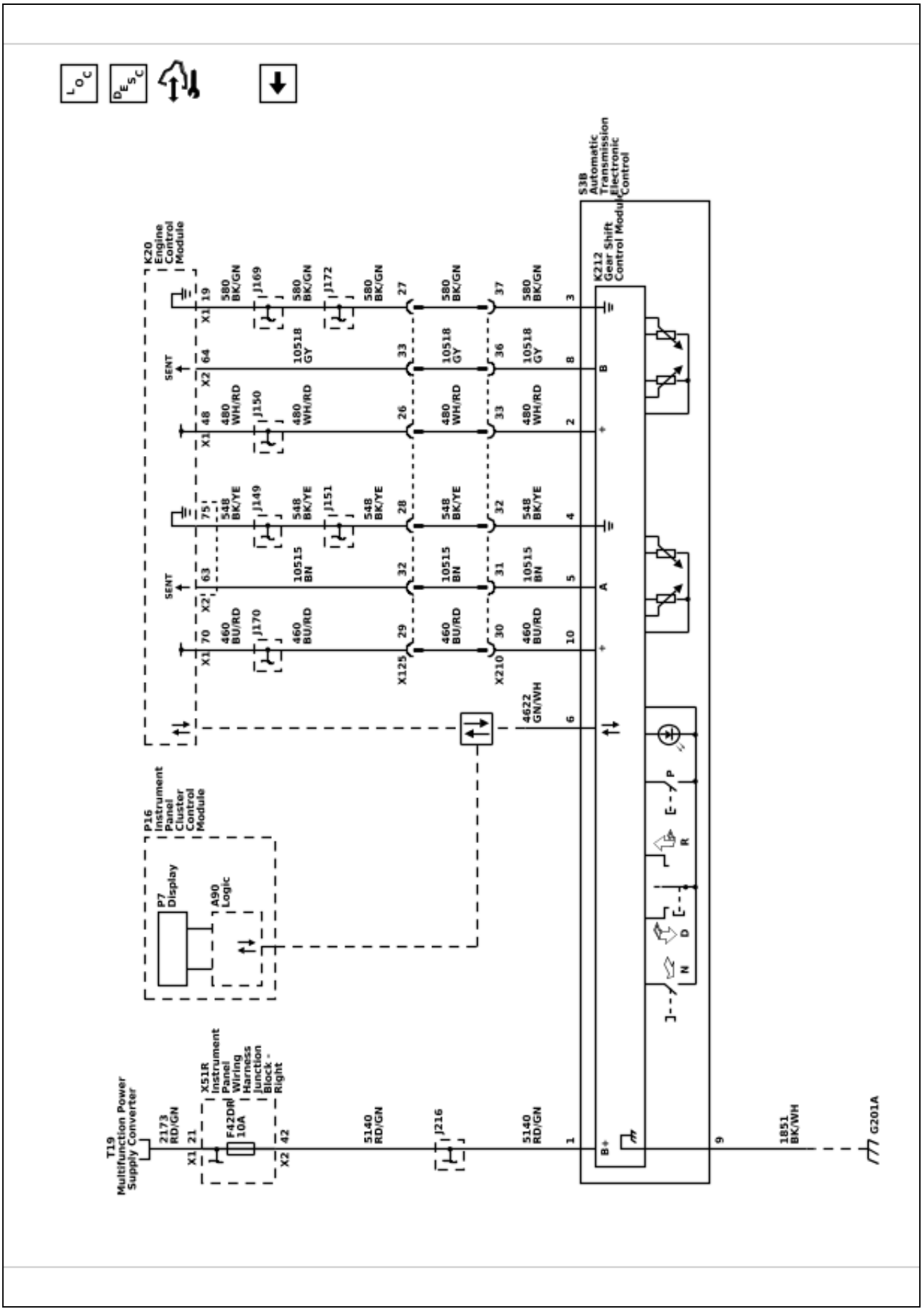

Transfer Case - MP 3015

Schematic and Routing Diagrams

Transfer Case Control Schematics (Power, Ground, Serial Data, and Shift Controls)

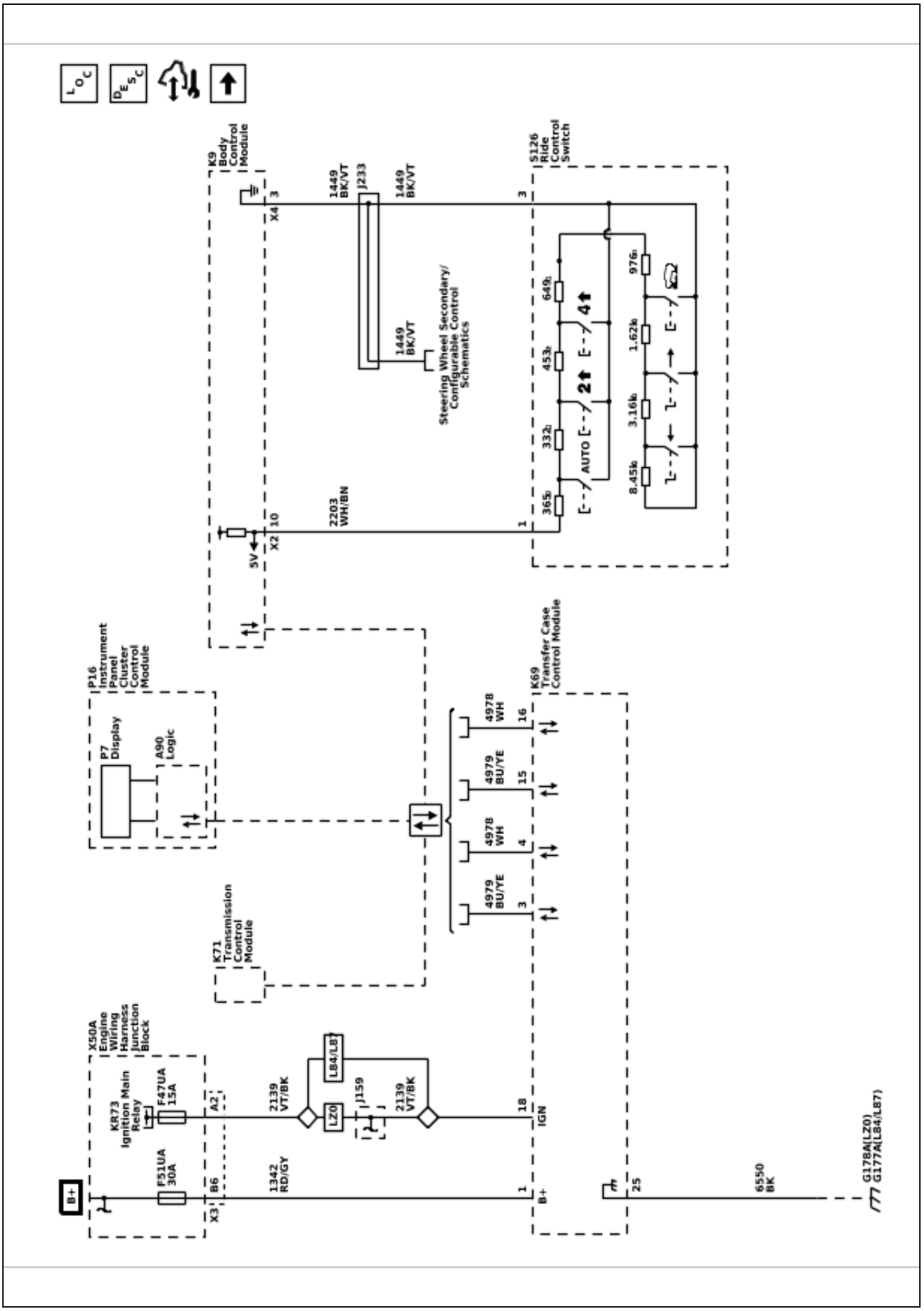

6613574

6613575

Transfer Case Control Schematics (Transfer Case Controls)

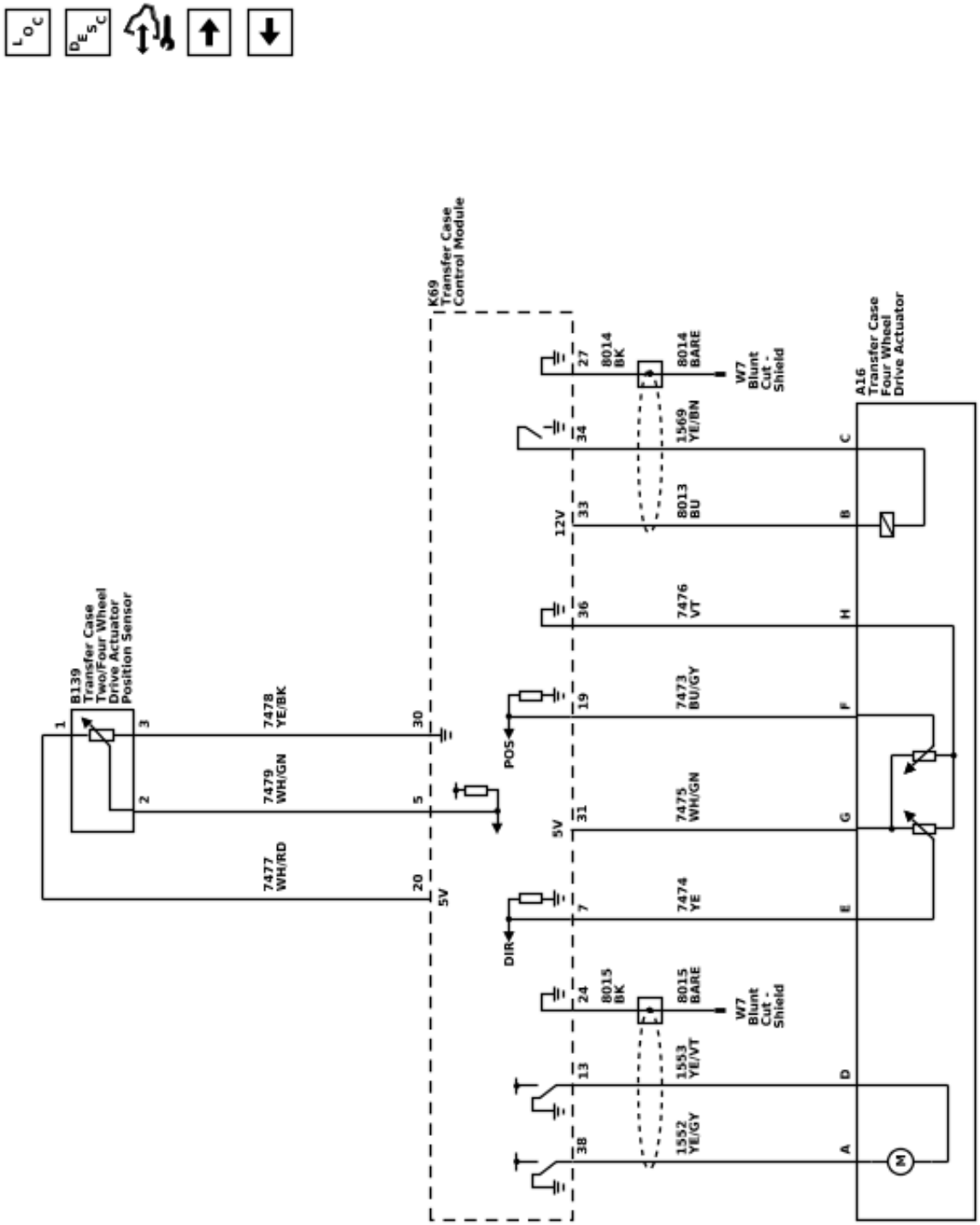

6613576

Transfer Case Control Schematics (Front Axle Controls)

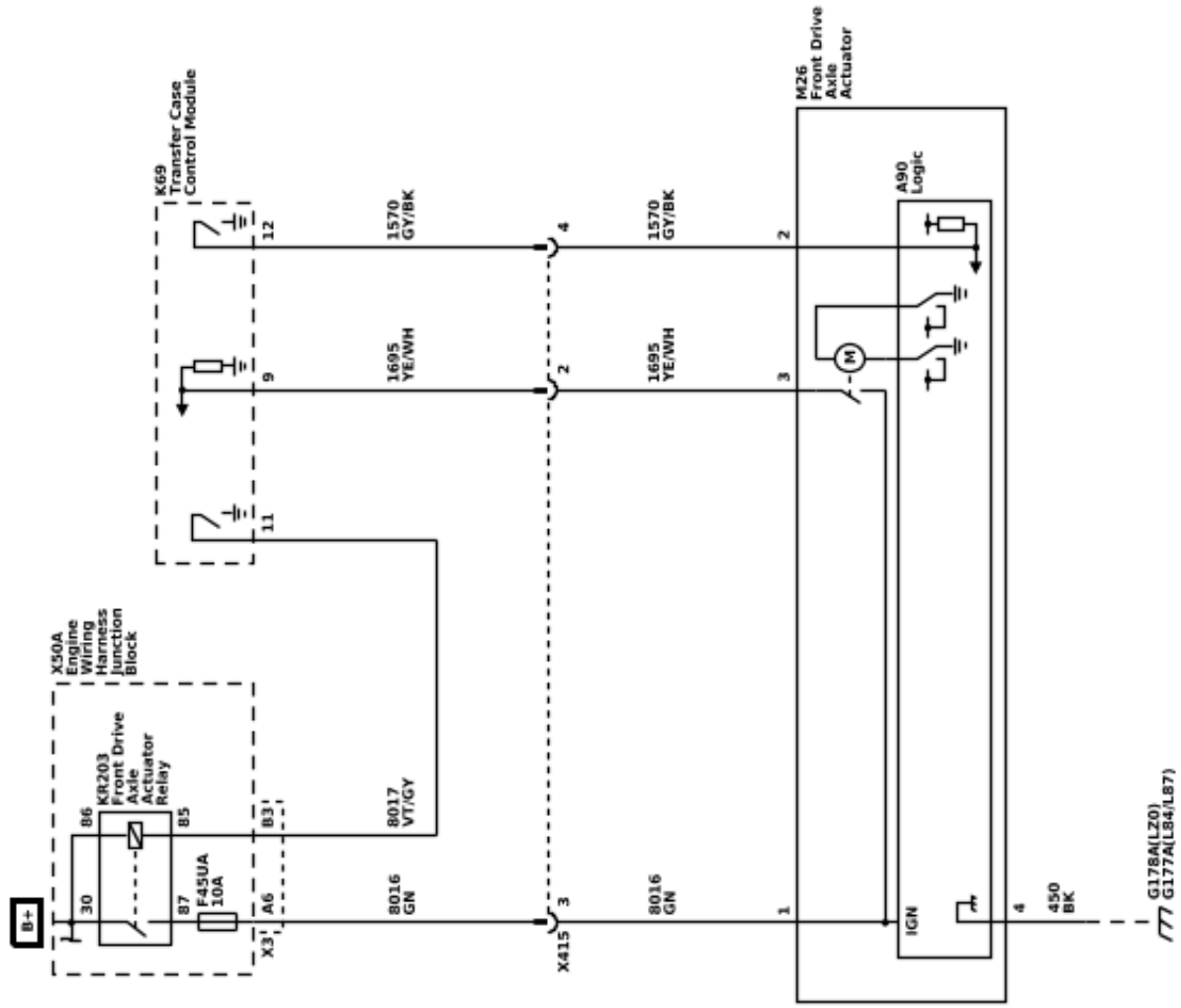

Description and Operation

Transfer Case Description and Operation

The Magna Powertrain (MP) model 3015 RPO NP0 transfer case is a 1 speed automatic, active transfer case (ATC). The MP 3015 ATC provides 3 modes, Auto 4WD, 4HI, and 2HI. The Auto 4WD position allows the capability of an active transfer case, which provides the benefits of on-demand torque biasing wet clutch and easy vehicle tuning through software calibrations. The software calibrations allow more features, such as flexible adapt ready position and clutch preload torque levels. The technology allows for vehicle speed dependent clutch toque levels to enhance the performance of the system. For example, the system is calibrated to provide 0–6.78 N•m (0–5 lb ft) of clutch torque during low speed, low engine torque operation, and predetermined higher torque for 40 km/h (25 mph) and greater. This prevents crow-hop and binding at low speeds and provides higher torque biases at higher vehicle speeds, in order to enhance stability.

Transfer Case Shift Control Switch

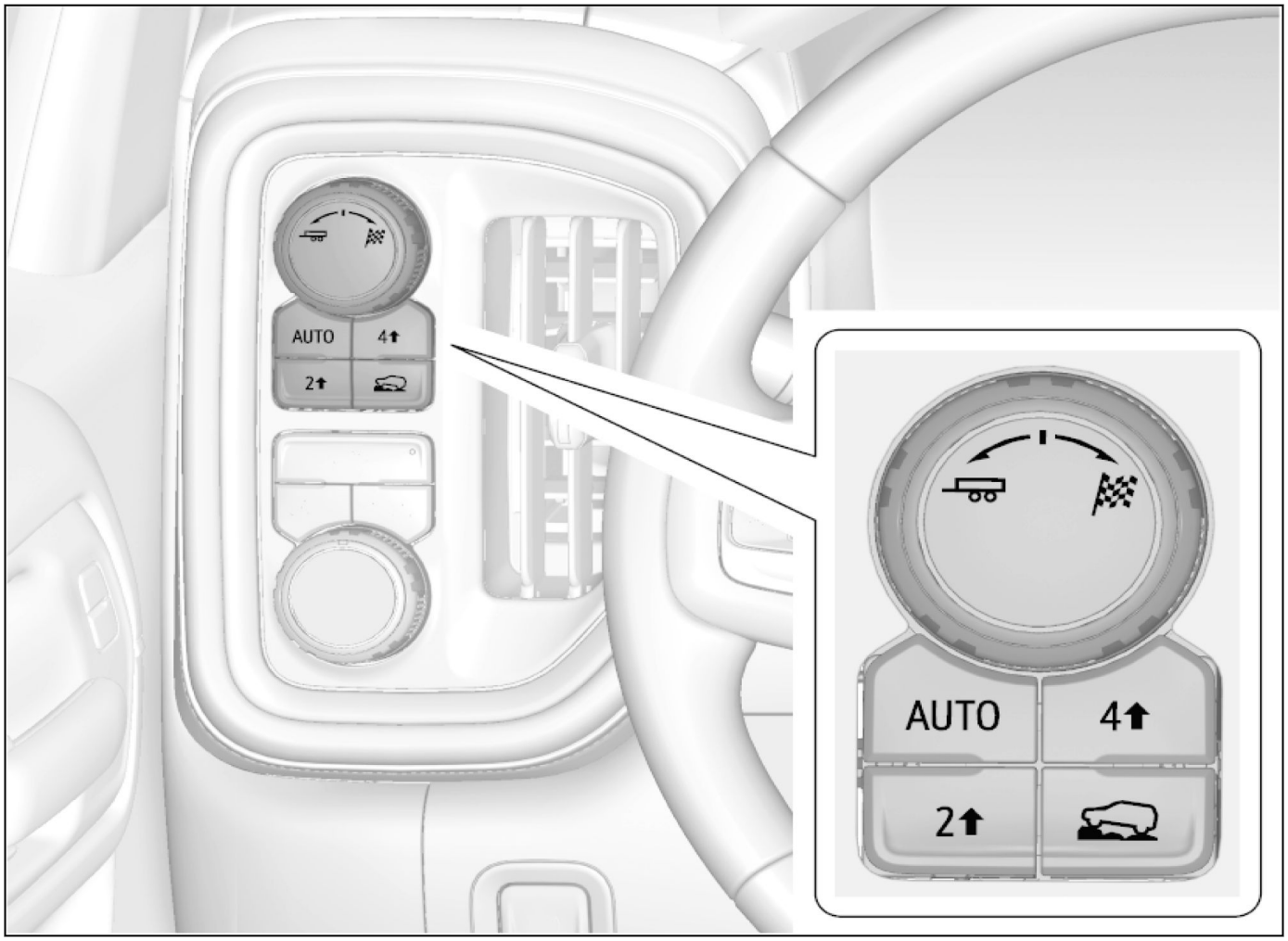

5123743

The MP 3015 ATC transfer case features a 3 mode shift control switch located on the instrument panel. When the ignition key is in the RUN position, the transfer case shift control module monitors the transfer case shift control switch to determine if the driver desires a new mode position. At a turn of the transfer case shift control switch, the lamp of the new desired position begins flashing to inform the driver that the transfer case shift control module has received the request for a new mode position. The lamp continues to flash until all shifting criteria has been met and the new mode position has been reached, or has been engaged. Once the mode position is fully active, the switch indicator lamp for the new position remains ON constantly. During normal driving situations, the transfer case can operate in the Auto 4WD mode. In the Auto 4WD mode, the transfer case shift control module monitors rear wheel slip speed, based on the inputs from the wheel speed sensors and/or vehicle speed sensor. When the vehicle experiences a rear wheel slip condition, the transfer case shift control module sends a pulse width modulated (PWM) signal to an electronic motor, which is the transfer case 2/4 wheel drive actuator assembly. This actuator rotates the transfer case control actuator shaft, applying a clutch. The clutch is designed to deliver a variable amount of torque, normally delivered to the rear wheels, and transfers it to the front wheels. Torque is ramped up to the front wheels until the front wheels speed sensor values equals that of the rear wheel speed sensors and/or vehicle speed sensor. Torque is ramped down to the front wheels. The process would repeat if rear wheel slip is detected again.

The MP 3015 TC transfer case has the added feature of also providing the driver with 2 manual mode positions:

- 4HI –4 Wheel Drive High Mode
- 2HI – 2 Wheel Drive High Mode

2WD Mode Power Flow

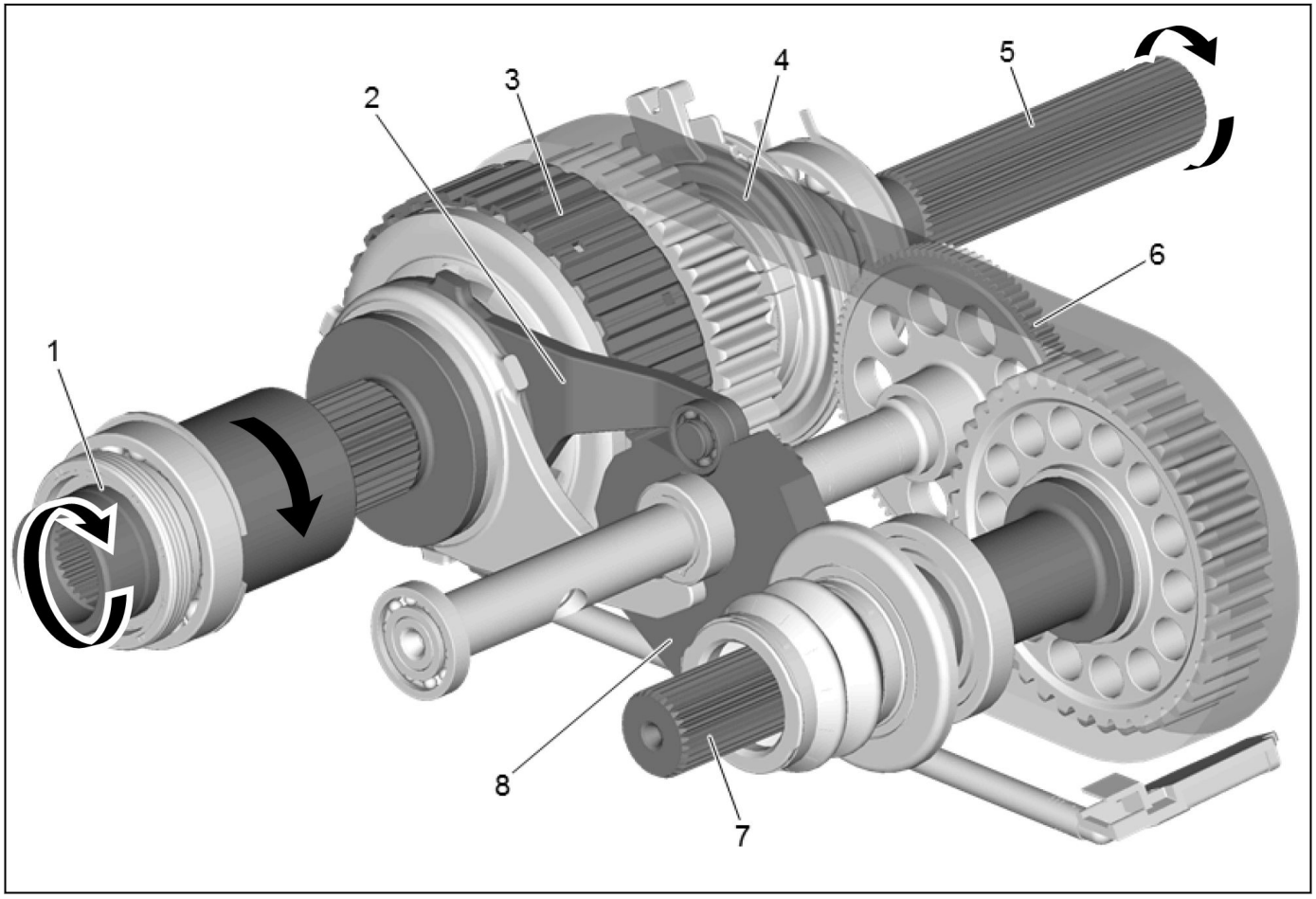

5071108

(1) Transfer Case Input Shaft

(2) Transfer Case Scissor Mechanism Lever

(3) Transfer Case Four Wheel Drive Clutch Pack

(4) Transfer Case Front Output Shaft Drive Chain Assembly

(5) Transfer Case Rear Output Shaft

(6) Transfer Case Two/Four Wheel Drive Actuator Shaft Gear
(7) Transfer Case Front Output Shaft
(8) Transfer Case Two/Four Wheel Drive Actuator Cam

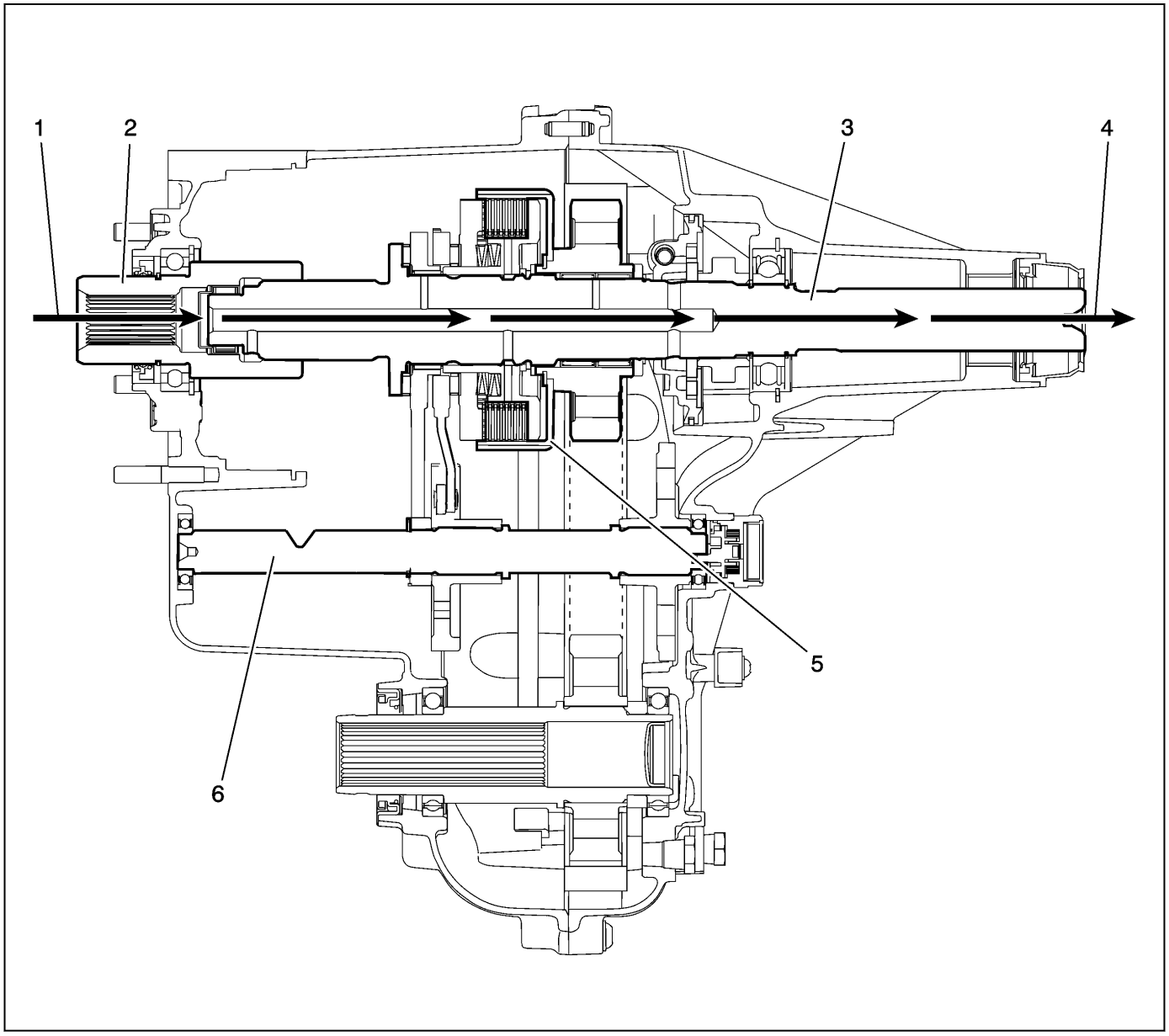

2236742

When the MP 3015 ATC is in the 2WD mode, the power flows from the transmission (1) to the input shaft (2). The input shaft (2) is splined to the rear output shaft (3). The rear output shaft (3) delivers the power flow to the rear propshaft (4). The position of the control actuator shaft (6) allows no clutch (5) engagement.

4HI Mode Power Flow

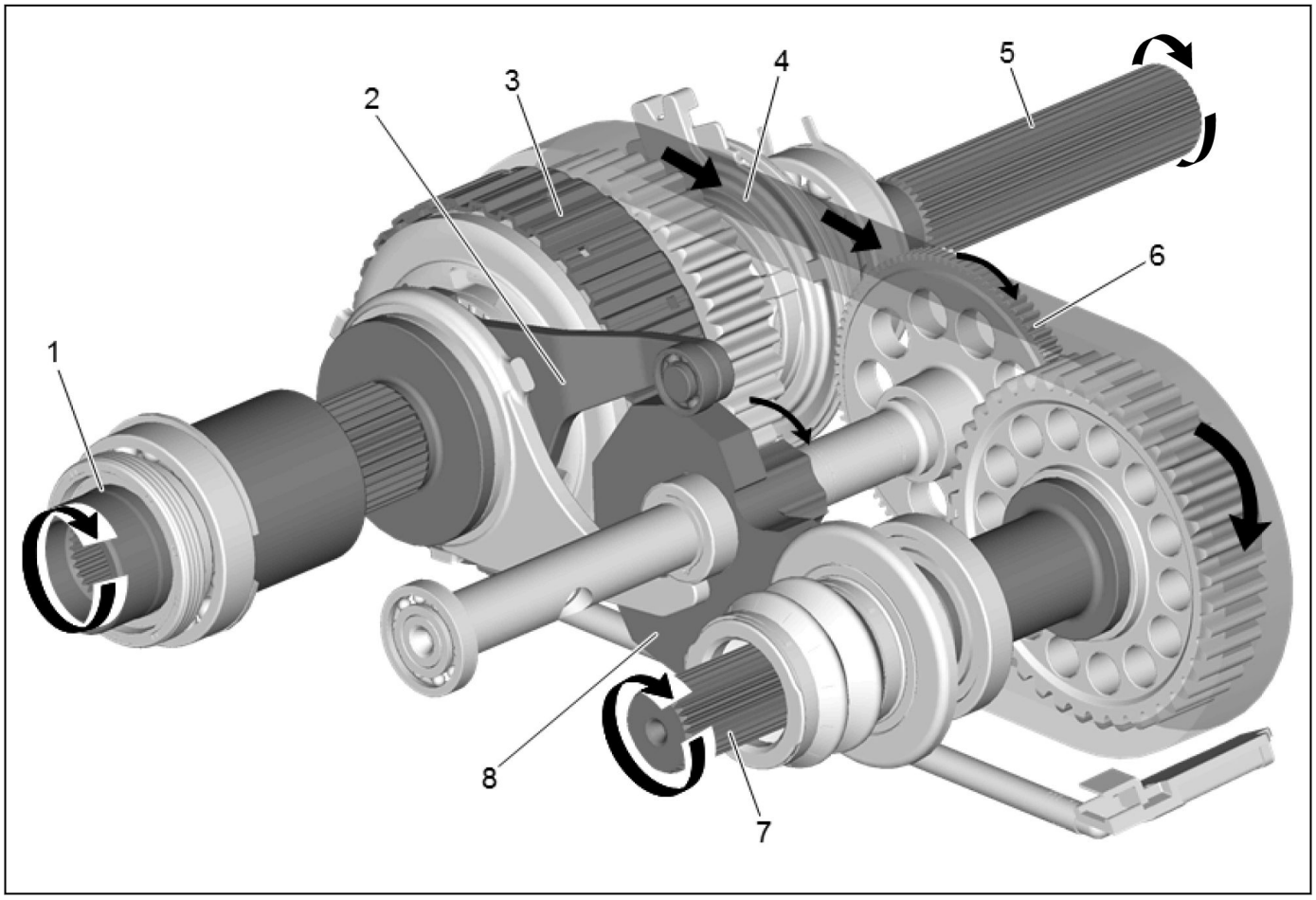

5071136

(1) Transfer Case Input Shaft
(2) Transfer Case Scissor Mechanism Lever
(3) Transfer Case Four Wheel Drive Clutch Pack
(4) Transfer Case Front Output Shaft Drive Chain Assembly
(5) Transfer Case Rear Output Shaft
(6) Transfer Case Two/Four Wheel Drive Actuator Shaft Gear
(7) Transfer Case Front Output Shaft
(8) Transfer Case Two/Four Wheel Drive Actuator Cam

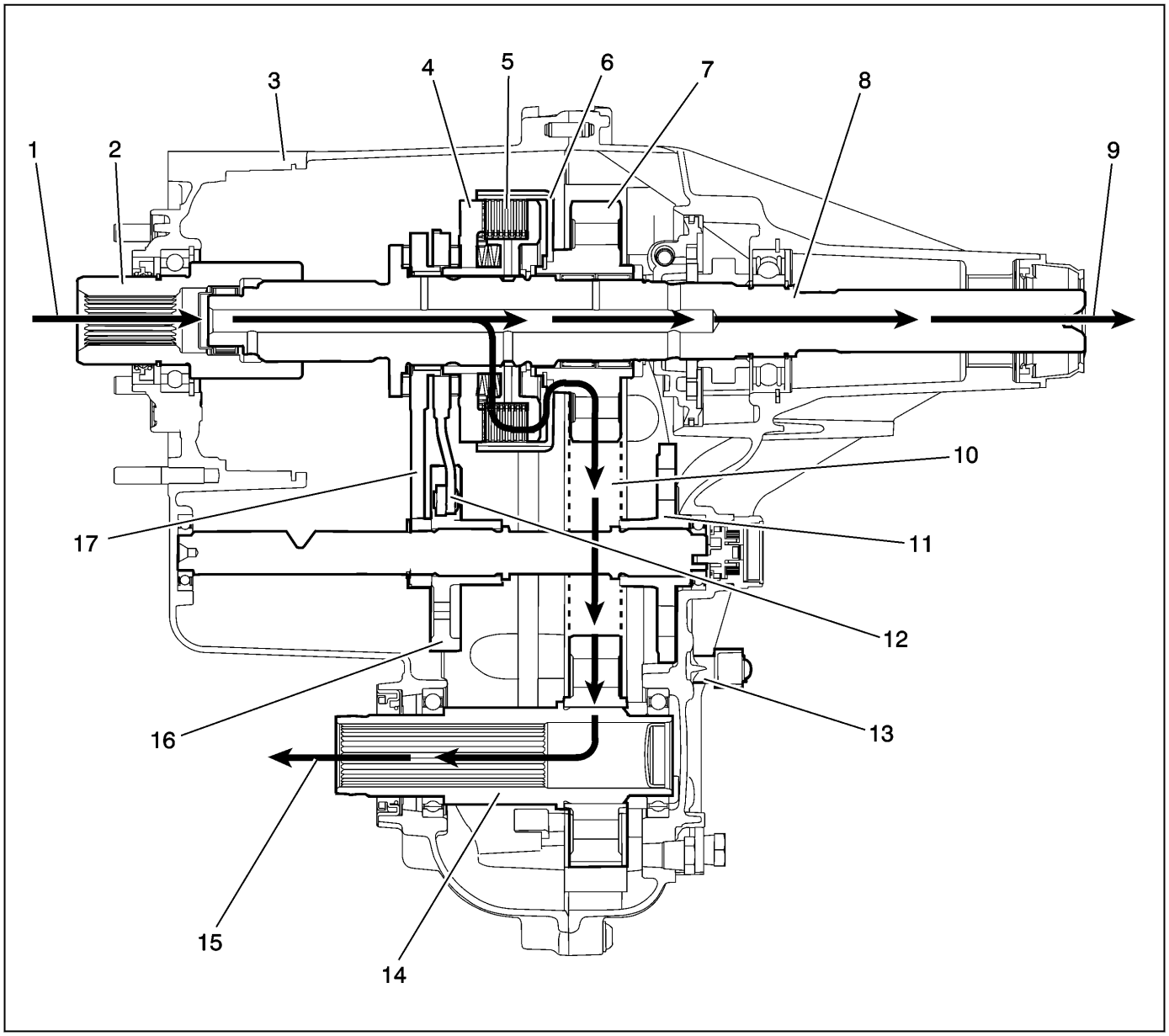

2236744

In the 4HI mode, the power flow to the rear propshaft (9) is the same as it is in the 2WD mode. To deliver power flow to the front propshaft (15) during the 4HI position, the transfer case control module commands the 2/4 wheel drive actuator assembly (13) to apply the clutch to a calibrated torque. The 2/4 wheel drive actuator assembly (13) turns the control actuator shaft. A brake in the 2/4 wheel drive actuator assembly (13) holds the control actuator shaft in the full clutch position. The control actuator shaft is cam designed and the cam action moves the control actuator lever (12). The control actuator lever (12) pivots against the control lever (17) and moves toward the clutch pressure plate (4), to engage the clutch (5). As more pressure is applied to the clutch pressure plate (4), the clutch discs (5) are compressed. Using inner clutch discs, which are engaged with the clutch hub, and the outer clutch discs, which are engaged with the clutch housing (6), the power flow is delivered to the clutch housing (6). The clutch hub is splined to the rear output shaft (8), and the clutch housing (6) rotates on a needle bearing on the rear output shaft (8). The chain drive sprocket (7) is splined to the clutch housing (6). The power flows from the drive sprocket (7), through the chain (10), to the chain driven sprocket. The driven sprocket is splined to the front output shaft (14). The power flow is delivered to the front propshaft (15) through the front output shaft (14).

4HI Auto Mode Power Flow

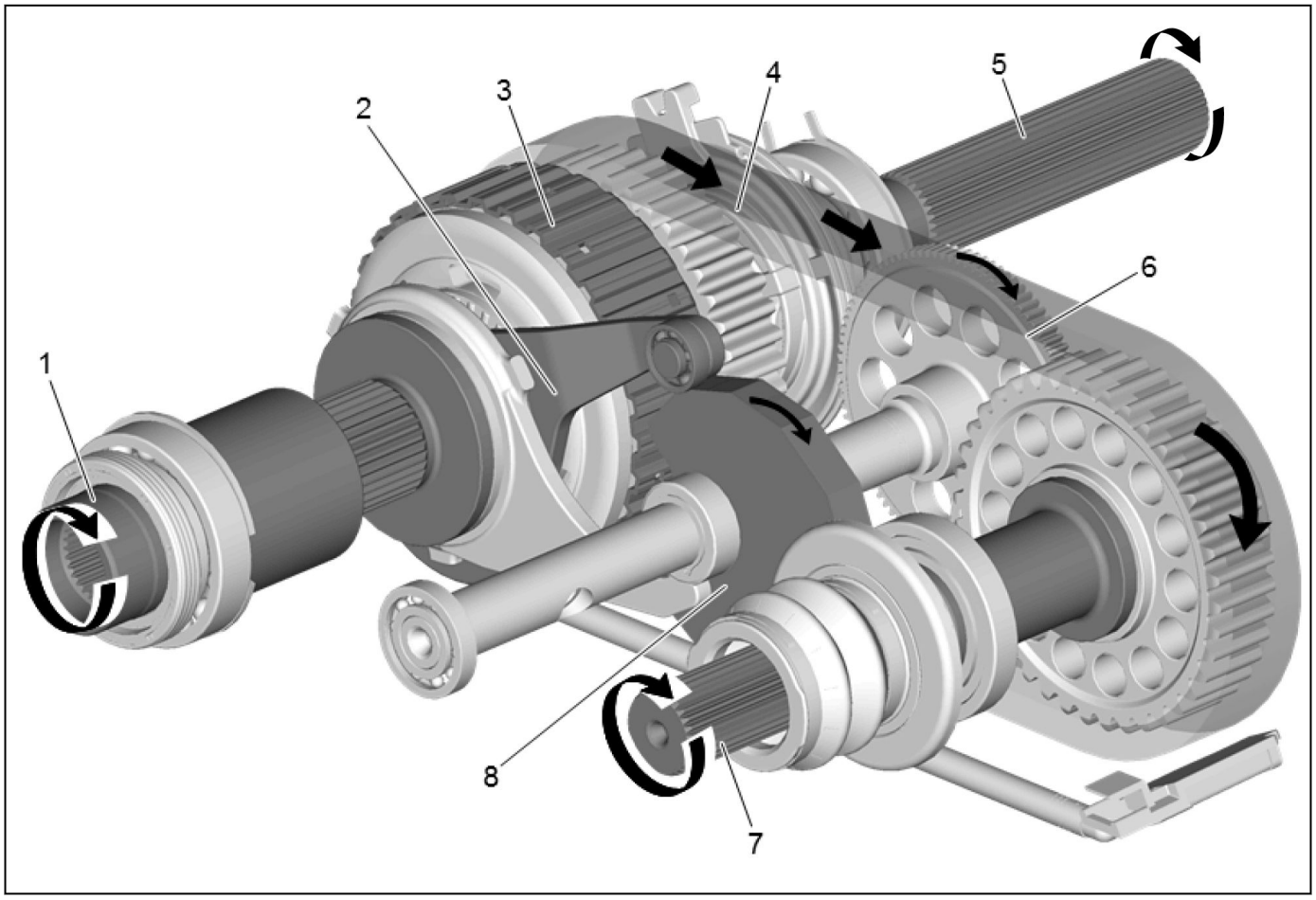

5071147

(1) Transfer Case Input Shaft
(2) Transfer Case Scissor Mechanism Lever
(3) Transfer Case Four Wheel Drive Clutch Pack
(4) Transfer Case Front Output Shaft Drive Chain Assembly
(5) Transfer Case Rear Output Shaft
(6) Transfer Case Two/Four Wheel Drive Actuator Shaft Gear
(7) Transfer Case Front Output Shaft
(8) Transfer Case Two/Four Wheel Drive Actuator Cam

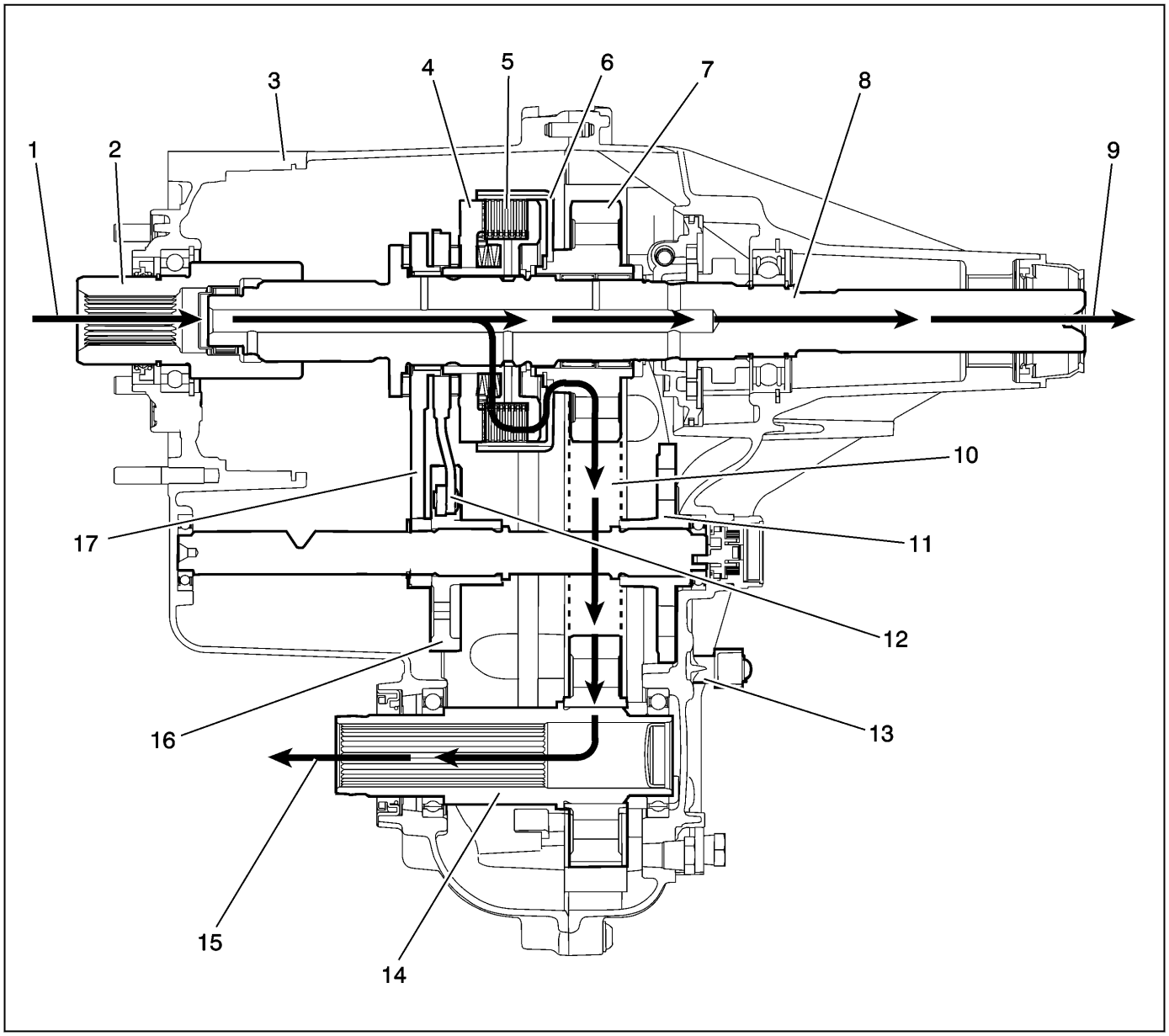

2236744

In the 4HI Auto mode, the power flow to the rear propshaft (9) is the same as it is in the 2WD mode. To deliver power flow to the front propshaft (15) during the 4HI position, the transfer case control module commands the 2/4 wheel drive actuator assembly (13) to apply the clutch to a calibrated torque. The 2/4 wheel drive actuator assembly (13) rotates the control actuator shaft to the correct torque level positions. Rotating the control actuator shaft to the various positions changes the clutch torque level. The control actuator shaft is cam designed and the cam action moves the control actuator lever (12). The control actuator lever (12) pivots against the control lever (17) and moves toward the clutch pressure plate (4), to engage the clutch (5). As more pressure is applied to the clutch pressure plate (4), the clutch discs (5) are compressed. Using inner clutch discs, which are engaged with the clutch hub, and the outer clutch discs, which are engaged with the clutch housing (6), the power flow is delivered to the clutch housing (6). The clutch hub is splined to the rear output shaft (8), and clutch housing (6) rotates on a needle bearing on the rear output shaft (8). The chain drive sprocket (7) is splined to the clutch housing (6). The power flows from the drive sprocket (7), through the chain (10), to the chain driven sprocket. The driven sprocket is splined to the front output shaft (14). The power flow is delivered to the front propshaft (15) through the front output shaft (14). When a difference of front wheel speed to rear wheel speed is recognized, the transfer case control module commands for more or less clutch torque.

Service 4 Wheel Drive Message

The Service 4 Wheel Drive Message is a display within the driver information center (DIC) and cannot be serviced separately. This message is used to inform the driver that a transfer case system condition has occurred. The Service 4 Wheel Drive Message is controlled by the transfer case shift control module via GMLAN.

Transfer Case Two/Four Wheel Drive Incremental Sensor

The incremental sensor is mounted within the transfer case actuator and is replaced as an assembly. The incremental sensor converts the shift detent lever shaft position, representing a mode, into an electrical signal input to the transfer case shift control module. The module detects what position the transfer case is in by monitoring the voltage returned on the incremental encoder impulse signal circuit. This voltage translates into AUTO 4WD, 2HI, and 4HI or in transition between gears.

Transfer Case Two/Four Wheel Drive Actuator Assembly

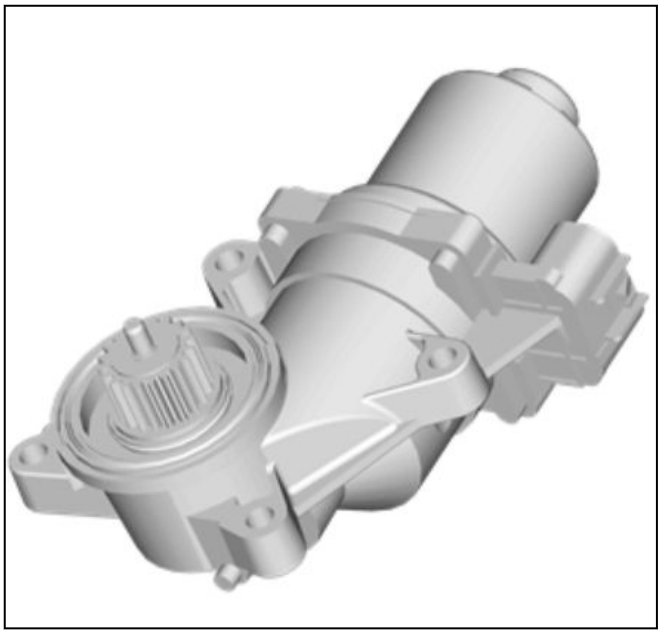

1986212

The transfer case two/four wheel drive actuator assembly consists of a permanent magnet DC motor and gear reduction assembly. It is located on the left hand side, driver's side, of the transfer case. When activated, it turns the shift detent lever shaft of the transfer case, clockwise or counterclockwise, to shift the transfer case. The motor/encoder is controlled with a PWM signal by the transfer case shift control module. This circuit consists of a driver on both the Motor A and Motor B circuits. The encoder motor is bi-directional in order to allow the motor to shift the transfer case from 2HI to 4HI positions.

Transfer Case Actuator Shaft Position Sensor Assembly

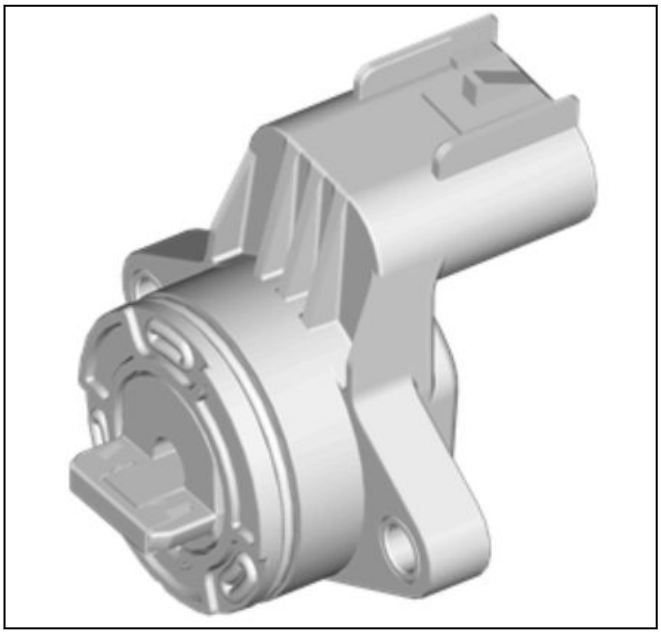

1986213

This sensor works in conjunction with the incremental sensor and shows transfer case position in degrees.

Transfer Case Motor Lock

The transfer case motor lock is used to provide a 2HI and 4HI feature. When the lock circuit is energized, the transfer case encoder motor is allowed to turn. When the transfer case is placed 2HI or 4HI the motor lock circuit is de-energized and the lock is applied. This assures that the transfer case remains in the current gear position until a new gear position is requested. When AUTO 4WD is selected, the motor lock remains applied until an adaptive mode, torque being applied to the front propshaft, is required. During an adaptive mode the motor lock circuit is energized and the motor lock is released, enabling the encoder motor to turn and apply or release torque at the front propshaft.

Transfer Case Shift Control Module

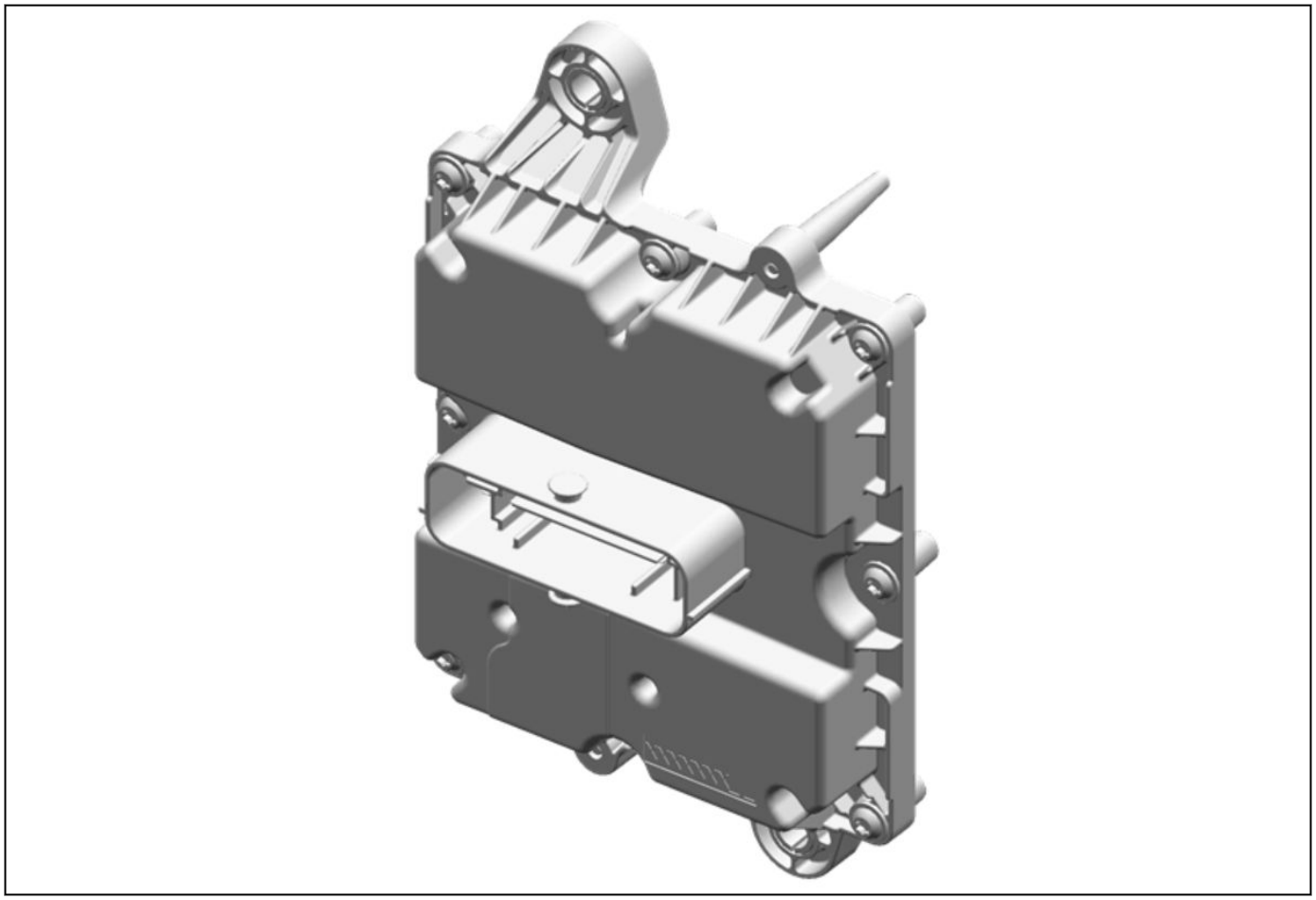

5071149

The transfer case shift control module uses the vehicle identification number (VIN) for calculations based on axle ratio, transmission, tire size, and engine size. For StabiliTrak applications, when the vehicle is in AUTO 4WD mode, the transfer case shift control module monitors the wheel speed via the four wheel speed sensors in order to detect wheel slippage. For non-StabiliTrak applications, when the vehicle is in AUTO 4WD mode, the transfer case shift control module monitors the wheel speed via the two front wheel speed sensors and the vehicle speed sensor in order to detect slippage. When wheel slippage is detected, the module applies a clutch pack contained inside the transfer case. This clutch pack is used to lock-in and apply the front propshaft, transferring torque to the front wheels. The clutch pack is applied by a motor/encoder assembly. When slip is no longer detected by the transfer case shift control module, the clutch is no longer applied.

Transfer Case - MP 3025

Schematic and Routing Diagrams

Transfer Case Control Schematics (Power, Ground, Serial Data, and Shift Controls)

6613577

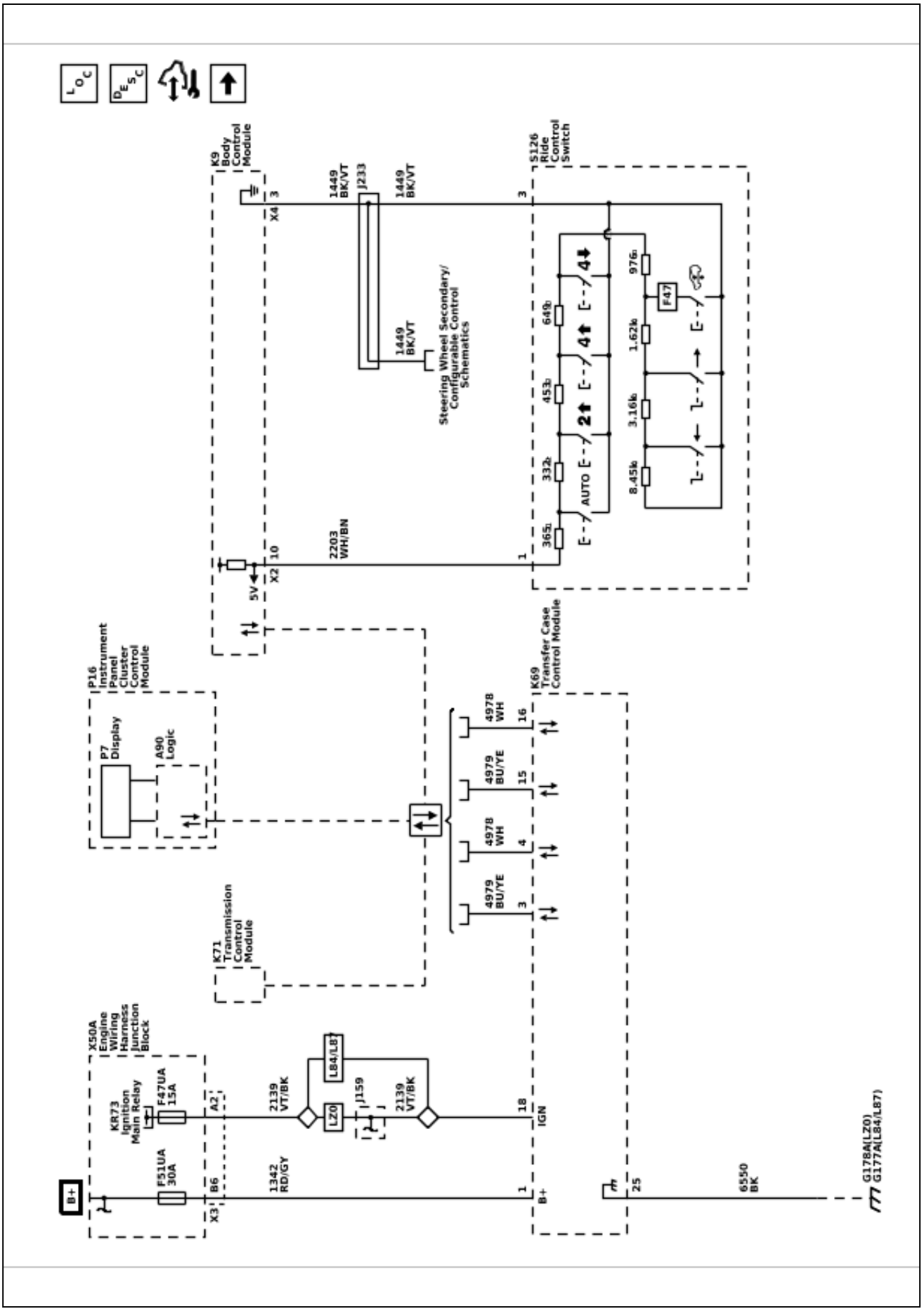

6613578

Transfer Case Control Schematics (Transfer Case Controls)

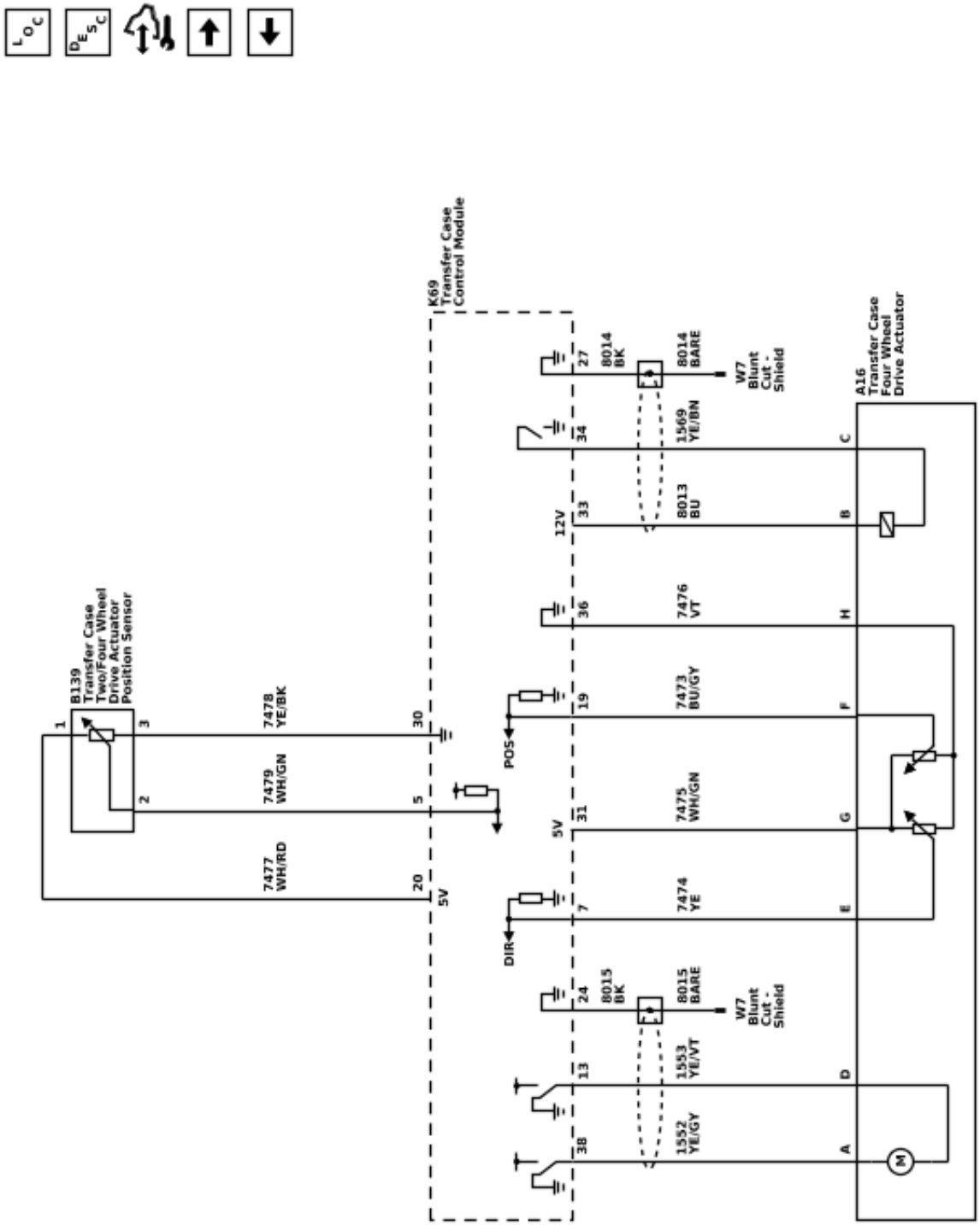

Transfer Case Control Schematics (Front Axle Controls)

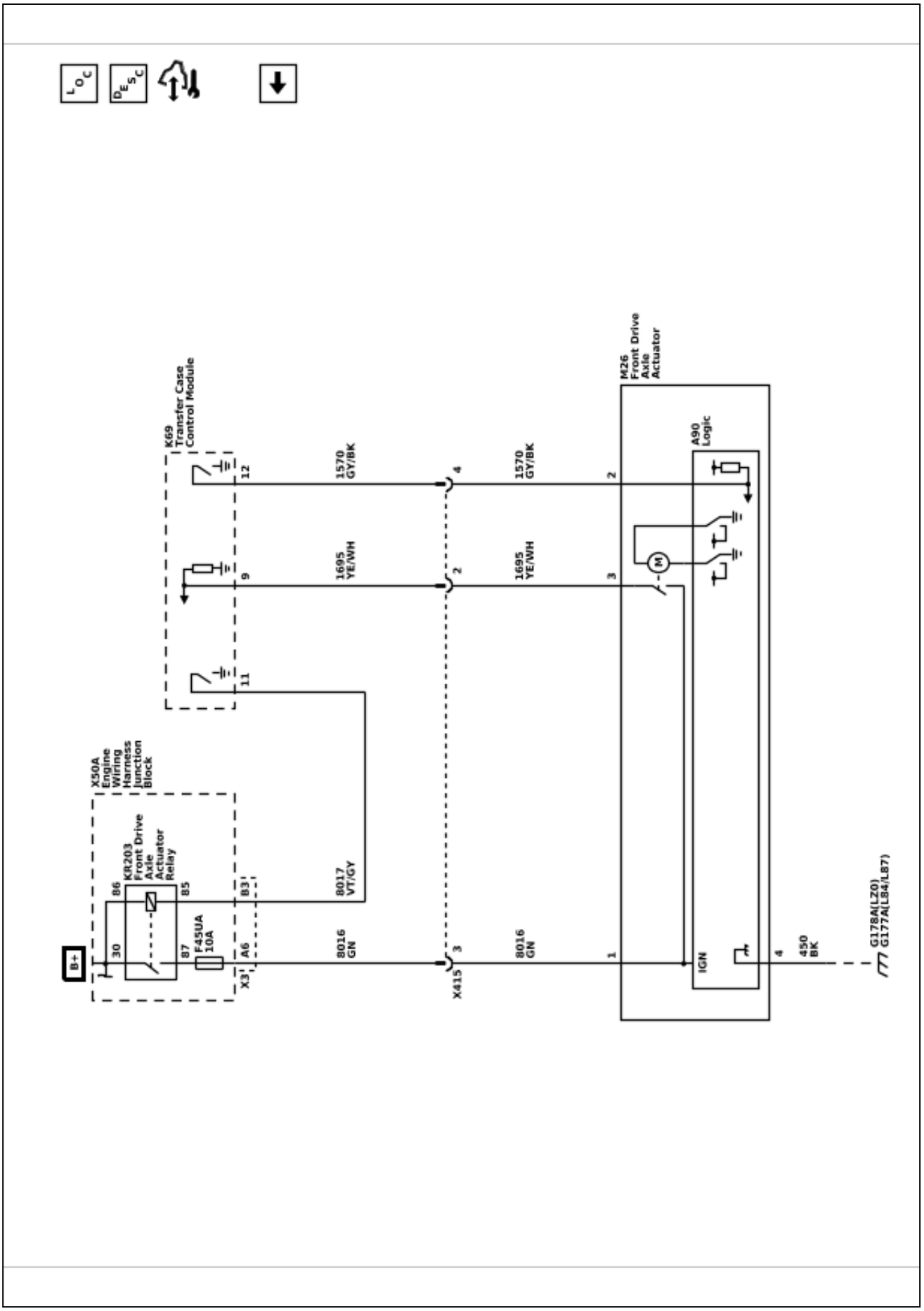

Description and Operation

Transfer Case Description and Operation

The Magna Powertrain (MP) model 3025 RPO NQH transfer case is a 2 speed automatic, active transfer case (ATC). The MP 3025 ATC provides 5 modes, Auto 4WD, 4HI, 4LO, 2HI and NEUTRAL. The Auto 4WD position allows the capability of an active transfer case, which provides the benefits of on-demand torque biasing wet clutch and easy vehicle tuning through software calibrations. The software calibrations allow more features such as flexible adapt ready position and clutch preload torque levels. The technology allows for vehicle speed dependent clutch torque levels to enhance the performance of the system. For example, the system is calibrated to provide 0–6.78 newtonm (0–5 lb ft) of clutch torque during low speed, low engine torque operation, and predetermined higher torque for 40 km/h (25 mph) and greater. This prevents crow-hop and binding at low speeds and provides higher torque biases at higher vehicle speeds, in order to enhance stability.

Transfer Case Shift Control Switch

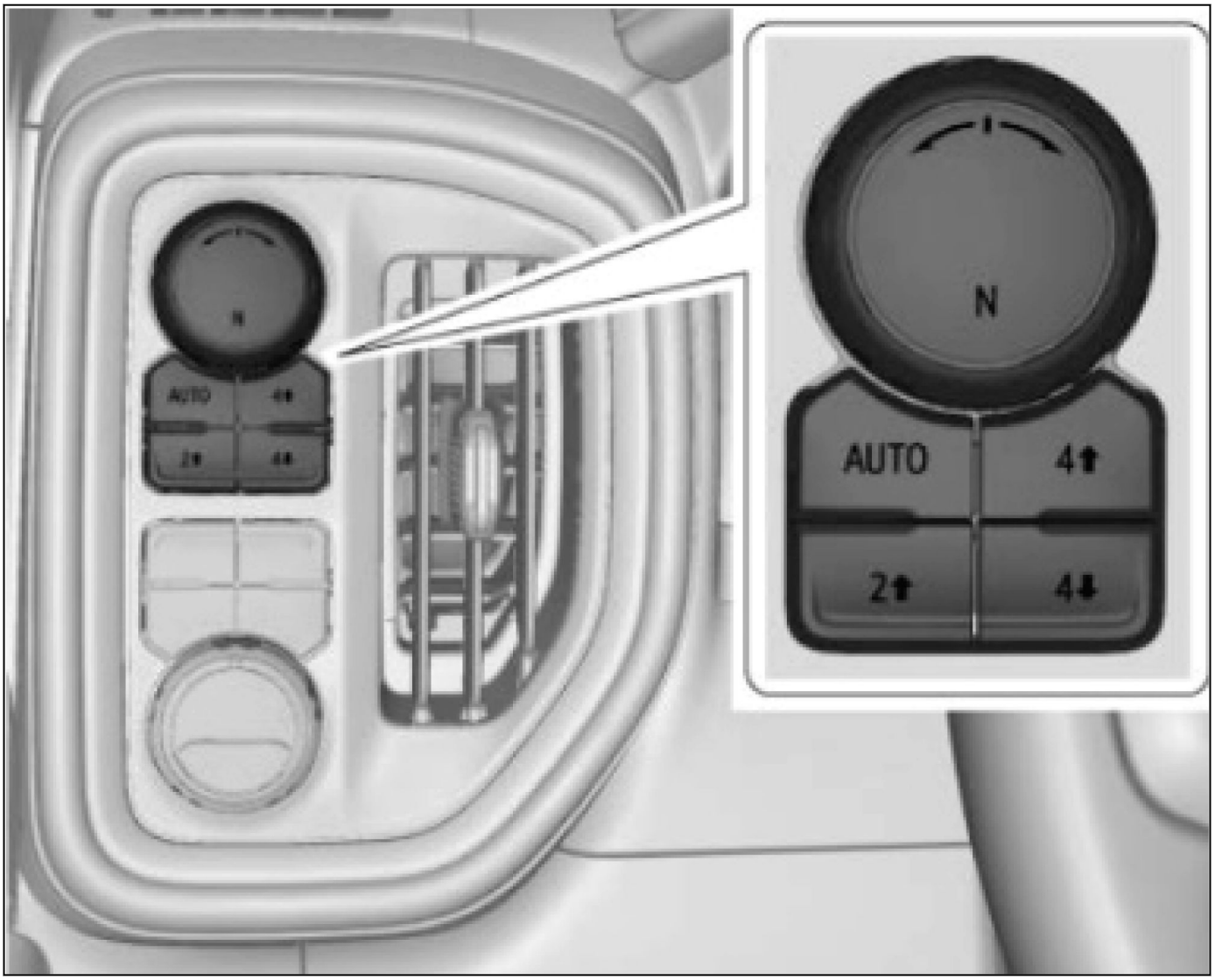

4994734

The MP 3025 ATC transfer case features a 5 mode shift control switch located on the instrument panel. When the ignition key is in the RUN position, the transfer case shift control module monitors the transfer case shift control switch to determine if the driver desires a new mode/range position.

To command a shift, press button of the new desired state. The actual 4x4 shift request is only made after the button is released. Transfer Case state will be displayed in the Cluster at all times. Graphic location could vary depending on trim level. However, graphics will be consistent. The graphic in the cluster will blink while a shift is in progress. The graphic will change to indicate the mode requested. When the shift is complete, the graphic will stop blinking and become

steady. If the transfer case cannot complete a shift, the graphic will return to the previously selected mode. While shift is in progress, cluster will display following DIC message: “4WD Shift in Progress”. The DIC message will turn off once the shift is complete.

During normal driving situations, the transfer case can operate in the Auto 4WD mode. In the Auto 4WD mode, the transfer case shift control module monitors rear wheel slip speed, based on the inputs from the wheel speed sensors and/or vehicle speed sensor. When the vehicle experiences a rear wheel slip condition, the transfer case shift control module sends a pulse width modulated (PWM) signal to an electronic motor, which is the transfer case 2/4 wheel drive actuator assembly. This actuator rotates the transfer case control actuator shaft, applying a clutch. The clutch is designed to deliver a variable amount of torque, normally delivered to the rear wheels, and transfers it to the front wheels. Torque is ramped up to the front wheels until the front wheel speed sensor matches that of the rear wheel speed sensors and/or vehicle speed sensor. Torque is ramped down to the front wheels. The process would repeat if rear wheel slip is detected again.

The MP 3025 ATC transfer case has the added feature of also providing the driver with 4 manual mode/range positions:

- 4HI – 4 Wheel Drive high range
- 2HI – 2 Wheel Drive high range
- 4LO – 4 wheel drive low range, 2.72:1 gear ratio reduction.
- Neutral

The driver may choose to select any of these mode/range positions while driving the vehicle. However, the transfer case will not allow a shift into or out of 4LO unless the following criteria has been met:

- The ignition switch is in RUN.
- The automatic transmission is in NEUTRAL.
- The vehicle speed is below 5 km/h (3 mph).

This transfer case also has a NEUTRAL position. A shift to the NEUTRAL position allows the vehicle to be towed without rotating the transmission output shaft. In the NEUTRAL position, the rear propeller shaft rotates the transfer case rear output shaft, in turn rotating the oil pump, thus providing constant lubrication during towing. NEUTRAL position may be obtained only if the following criteria have been met:

- Start the vehicle or turn the ignition on.
- Shift the transmission to NEUTRAL.
- Shift the transfer case to 2 HI. (Shifts to transfer case neutral are only allowed when transfer case initial state is 2 HI.)
- Apply park brake and/or Service brake. If Park Brake and/or service brake is not applied within 20 seconds, transfer case will remain in original state.

Once these conditions have been met, Press 2 HI 5 sequential times in 10 seconds until the Transfer Case N (Neutral) graphic starts blinking in cluster. When shift to Transfer Case N (Neutral) is complete, graphic in cluster will be steady. When the system completes the shift to NEUTRAL, the red NEUTRAL lamp will illuminate.

2WD Mode Power Flow

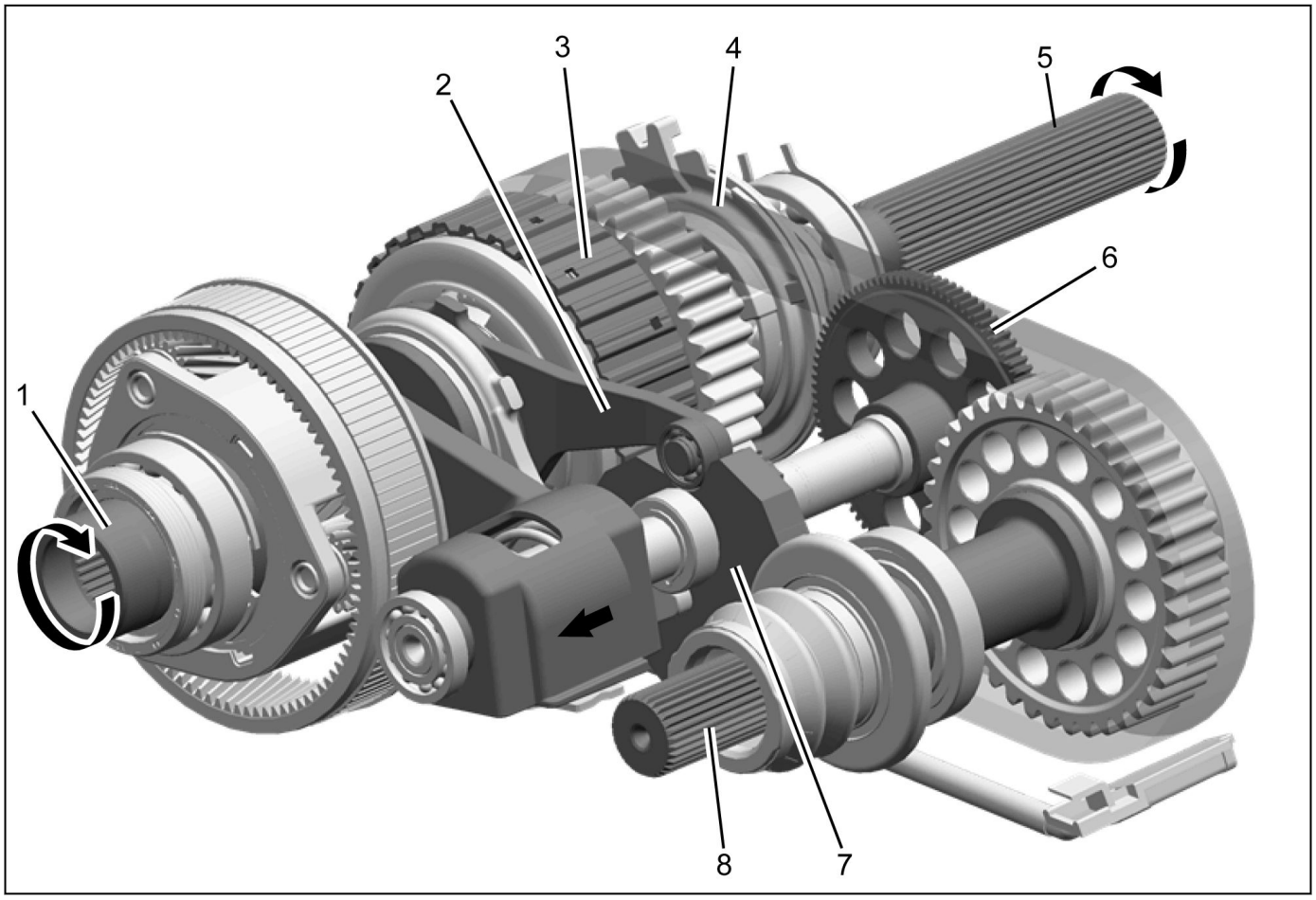

4994663

(1) Transfer Case Input Shaft
(2) Transfer Case Scissor Mechanism Lever
(3) Transfer Case Four Wheel Drive Clutch
(4) Transfer Case Front Output Shaft Drive Chain Assembly
(5) Transfer Case Rear Output Shaft
(6) Transfer Case Two/Four Wheel Drive Actuator Shaft Gear
(7) Transfer Case Two/Four Wheel Drive Actuator Cam
(8) Transfer Case Front Output Shaft

2WD Mode Power Flow

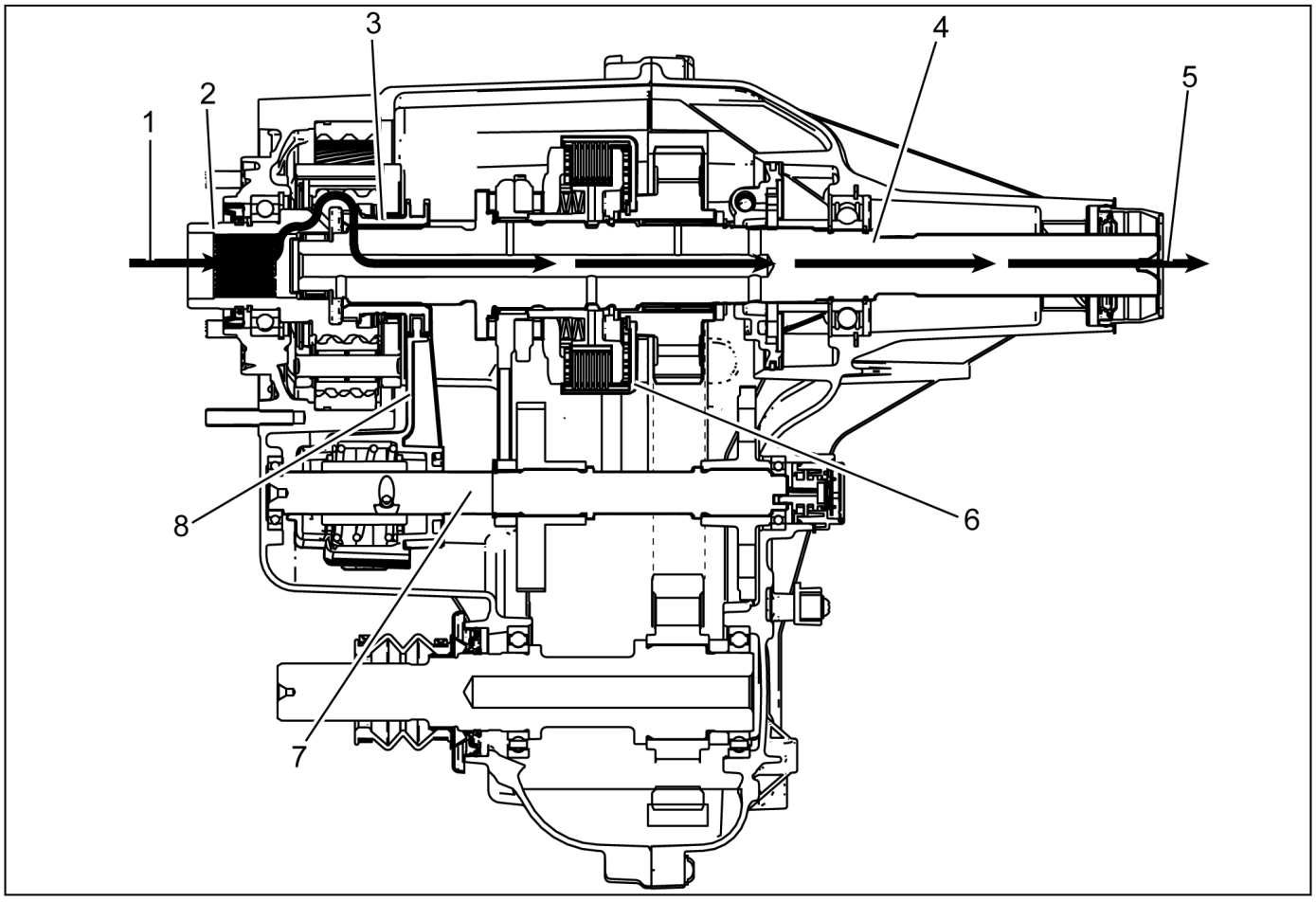

4996992

When the MP 3025 ATC is in the 2WD mode, the power flows from the transmission (1) to the input shaft (2). The input shaft (2) is connected to the rear output shaft (4) by the high/low clutch (3). The high/low clutch (3) outer teeth are engaged with the input shaft (2) inner, high-speed position teeth. At the same time the high/low clutch is slip splined to the rear output shaft (4). The rear output shaft (4) delivers the power flow to the rear propshaft (5). The position of the control actuator shaft (7) allows no clutch (6) engagement. The high/low range shift fork (8), is in the high-speed position on the control actuator shaft (7).

4HI Mode Power Flow

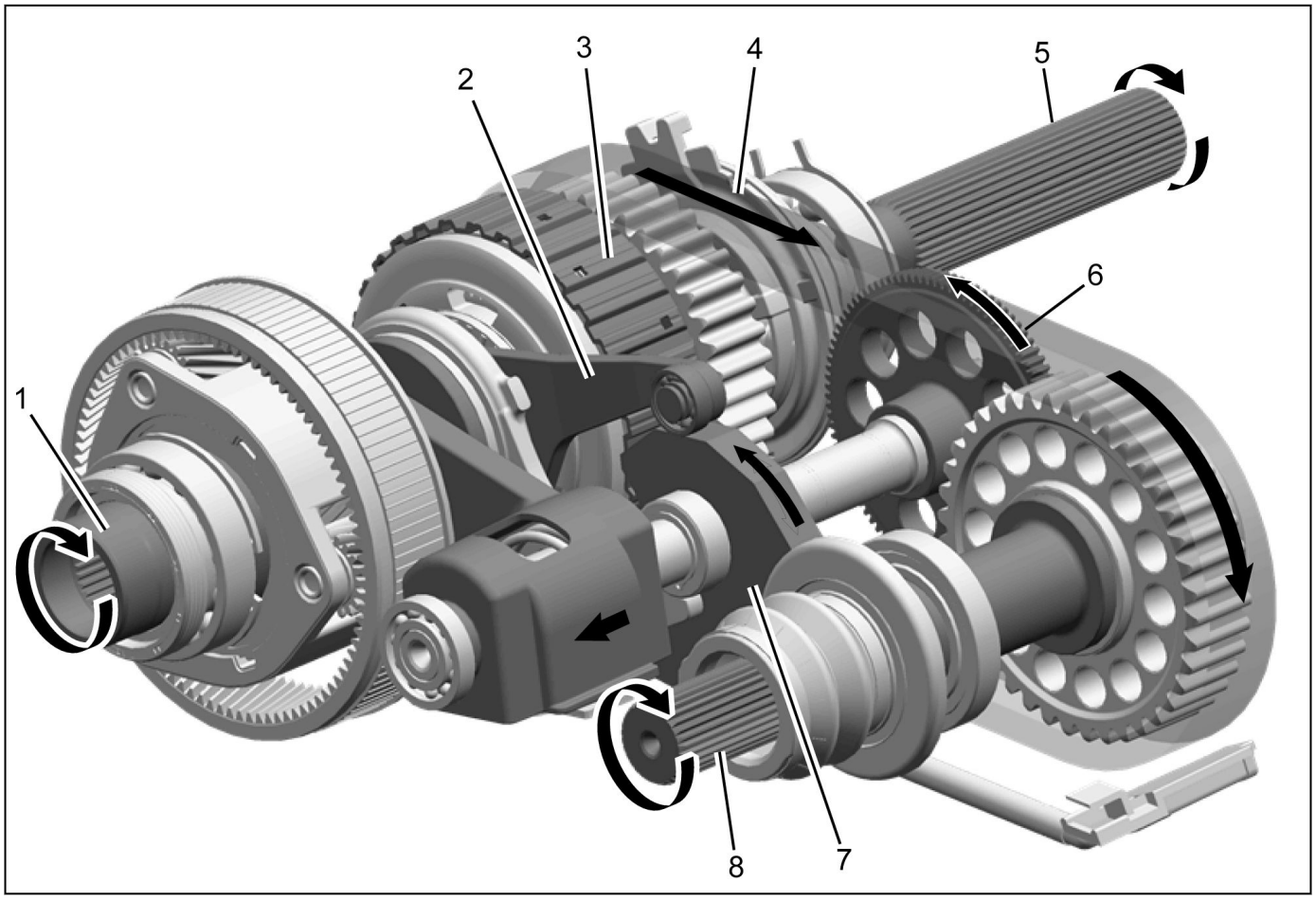

4994666

(1) Transfer Case Input Shaft
(2) Transfer Case Scissor Mechanism Lever
(3) Transfer Case Four Wheel Drive Clutch
(4) Transfer Case Front Output Shaft Drive Chain Assembly
(5) Transfer Case Rear Output Shaft
(6) Transfer Case Two/Four Wheel Drive Actuator Shaft Gear
(7) Transfer Case Two/Four Wheel Drive Actuator Cam
(8) Transfer Case Front Output Shaft

4HI Mode Power Flow

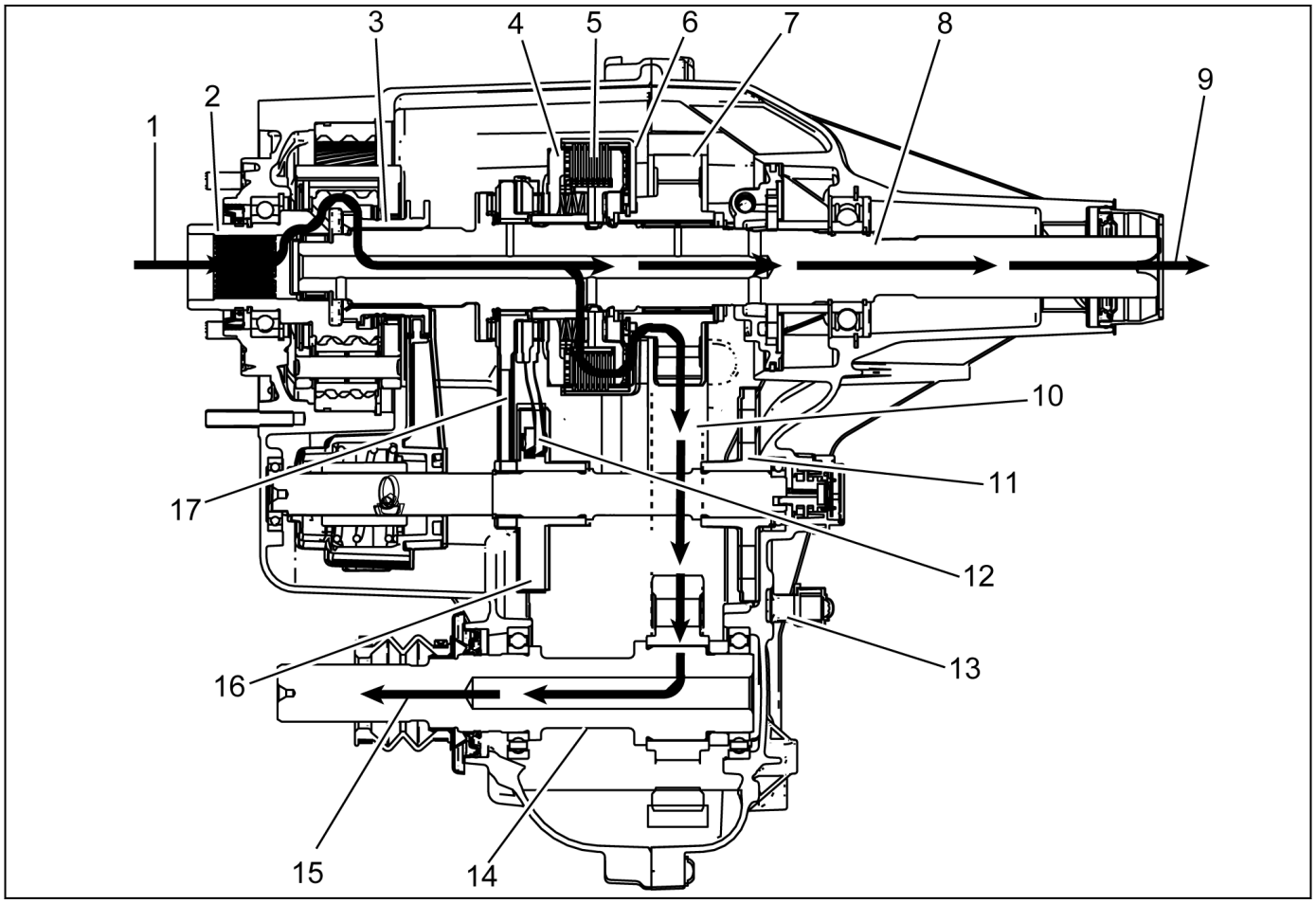

4996995

In the 4HI mode, the power flow to the rear propshaft (9) is the same as it is in the 2WD mode. To deliver power flow to the front propshaft (15) during the 4HI position, the transfer case control module commands the 2/4 wheel drive actuator assembly (13) to apply the clutch to a calibrated torque. The 2/4 wheel drive actuator assembly (13) turns the control actuator shaft. A brake in the 2/4 wheel drive actuator assembly (13) holds the control actuator shaft in the full clutch position. The control actuator shaft is cam designed and the cam action moves the control actuator lever (12). The control actuator lever (12) pivots against the control lever (17) and moves toward the clutch pressure plate (4), to engage the clutch (5). As more pressure is applied to the clutch pressure plate (4), the clutch discs (5) are compressed. Using inner clutch discs, which are engaged with the clutch hub, and the outer clutch discs, which are engaged with the clutch housing (6), the power flow is delivered to the clutch housing (6). The clutch hub is splined to the rear output shaft (8), and the clutch housing (6) rotates on a needle bearing on the rear output shaft (8). The chain drive sprocket (7) is splined to the clutch housing (6). The power flows from the drive sprocket (7), through the chain (10), to the chain driven sprocket. The driven sprocket is splined to the front output shaft (14). The power flow is delivered to the front propshaft (15) through the front output shaft (14).

During the Auto 4WD mode, the power flow is the same as it is in the 4HI mode. Except, during the Auto 4WD mode, the 2/4 wheel drive actuator assembly (13) rotates the control actuator shaft to the correct torque level positions. Rotating the control actuator shaft to the various positions changes the clutch torque level. When a difference of front wheel speed to rear wheel speed is recognized, the transfer case control module commands for more, or less clutch torque.

Auto 4WD Mode Power Flow

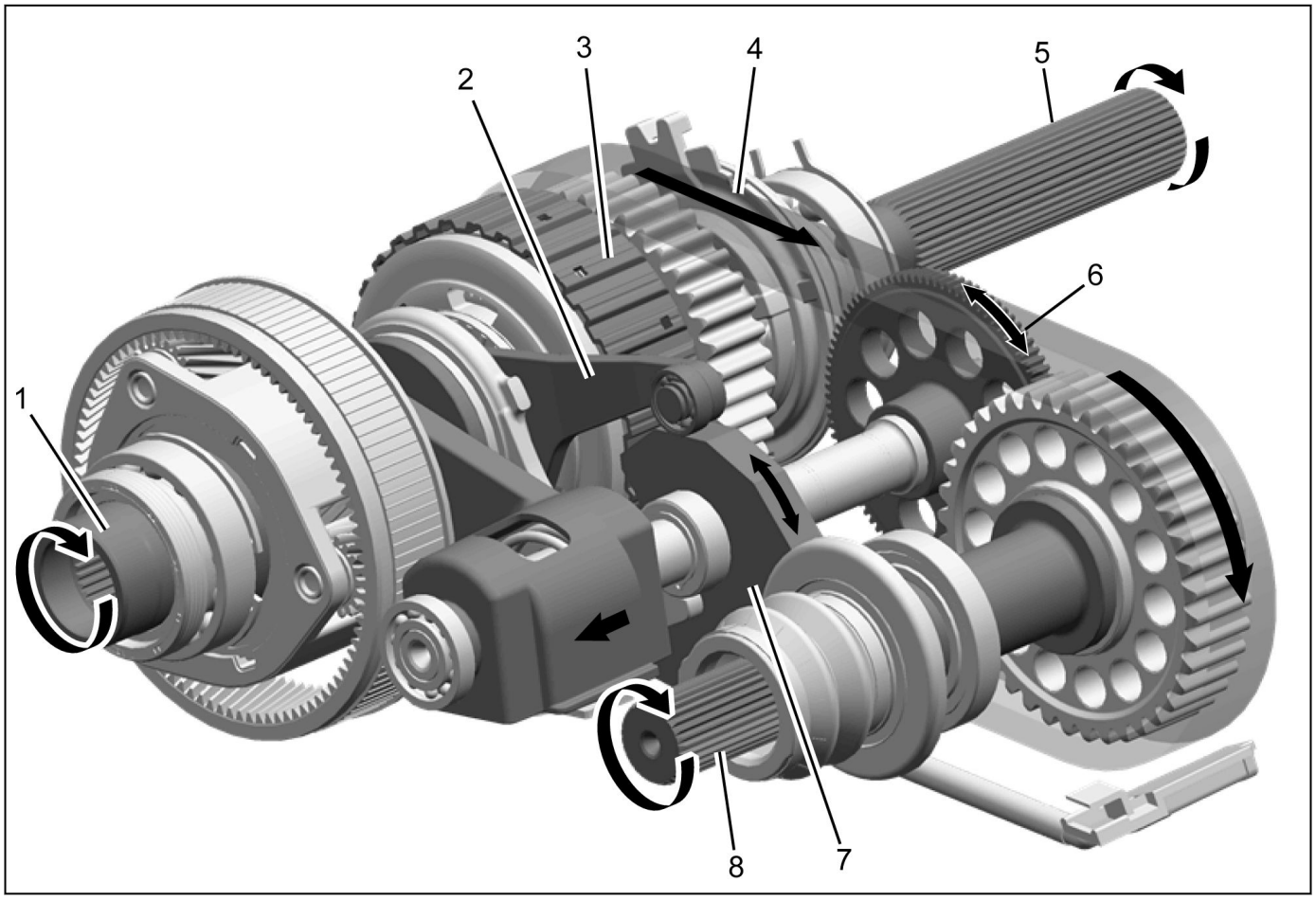

4994668

(1) Transfer Case Input Shaft
(2) Transfer Case Scissor Mechanism Lever
(3) Transfer Case Four Wheel Drive Clutch
(4) Transfer Case Front Output Shaft Drive Chain Assembly
(5) Transfer Case Rear Output Shaft
(6) Transfer Case Two/Four Wheel Drive Actuator Shaft Gear
(7) Transfer Case Two/Four Wheel Drive Actuator Cam
(8) Transfer Case Front Output Shaft

AUTO 4WD Mode Power Flow

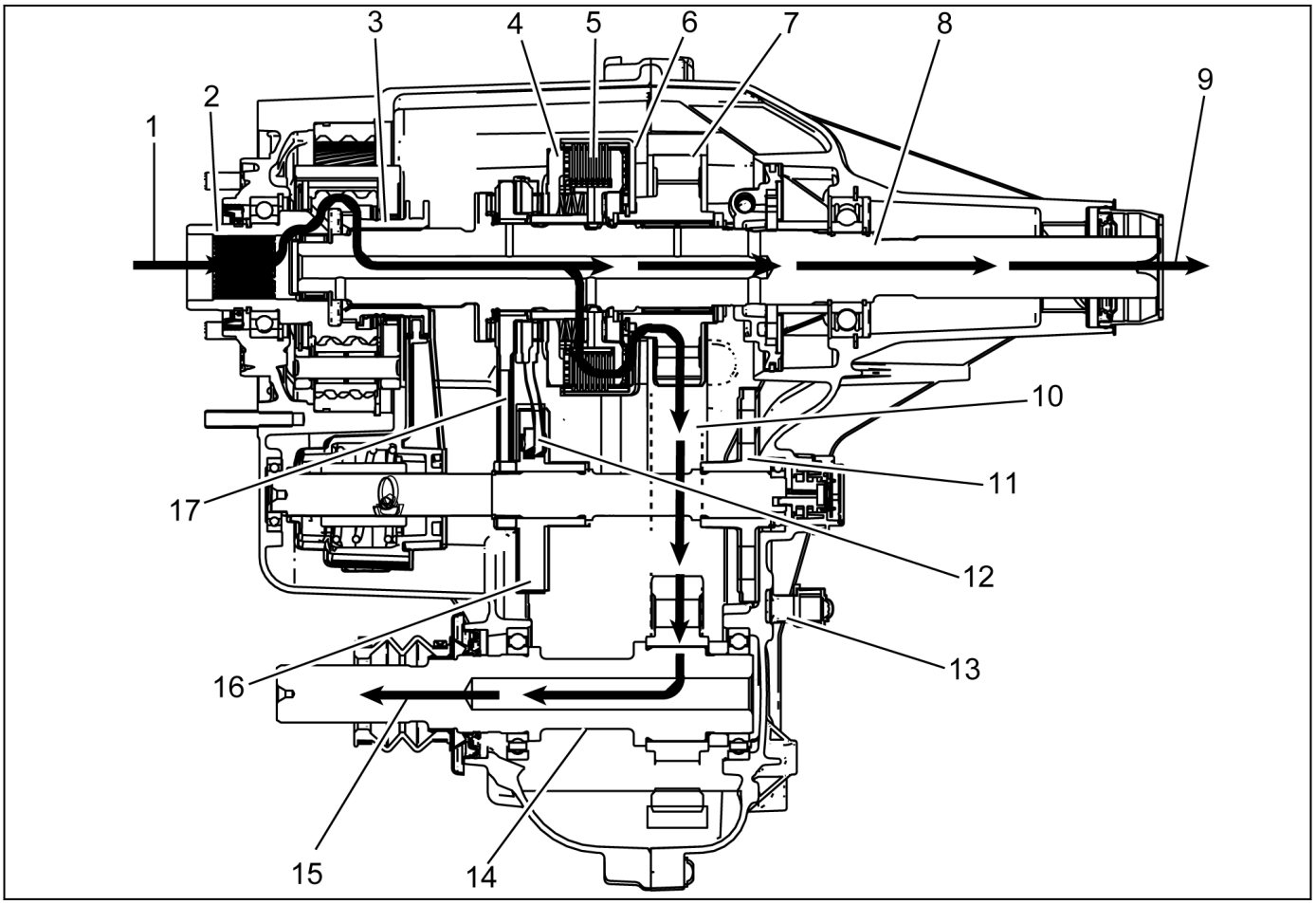

4996995

During the Auto 4WD mode, the power flow is the same as it is in the 4HI mode. Except, during the Auto 4WD mode, the 2/4 wheel drive actuator assembly (13) rotates the control actuator shaft to the correct torque level positions. Rotating the control actuator shaft to the various positions changes the clutch torque level. When a difference of front wheel speed to rear wheel speed is recognized, the transfer case control module commands for more or less clutch torque.

4LO Mode Power Flow

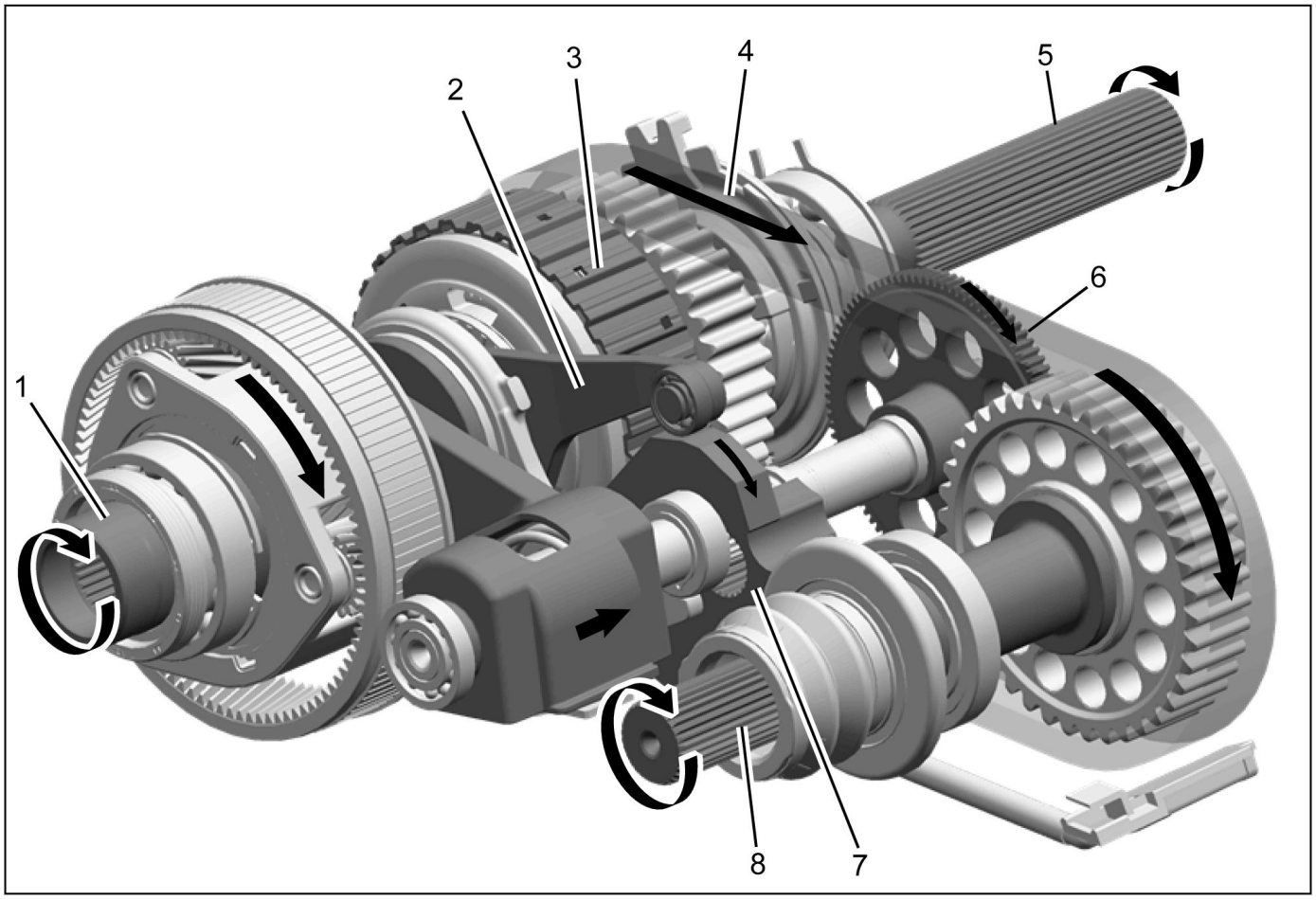

4994671

(1) Transfer Case Input Shaft
(2) Transfer Case Scissor Mechanism Lever
(3) Transfer Case Four Wheel Drive Clutch
(4) Transfer Case Front Output Shaft Drive Chain Assembly
(5) Transfer Case Rear Output Shaft
(6) Transfer Case Two/Four Wheel Drive Actuator Shaft Gear
(7) Transfer Case Two/Four Wheel Drive Actuator Cam
(8) Transfer Case Front Output Shaft

4LO Mode Power Flow

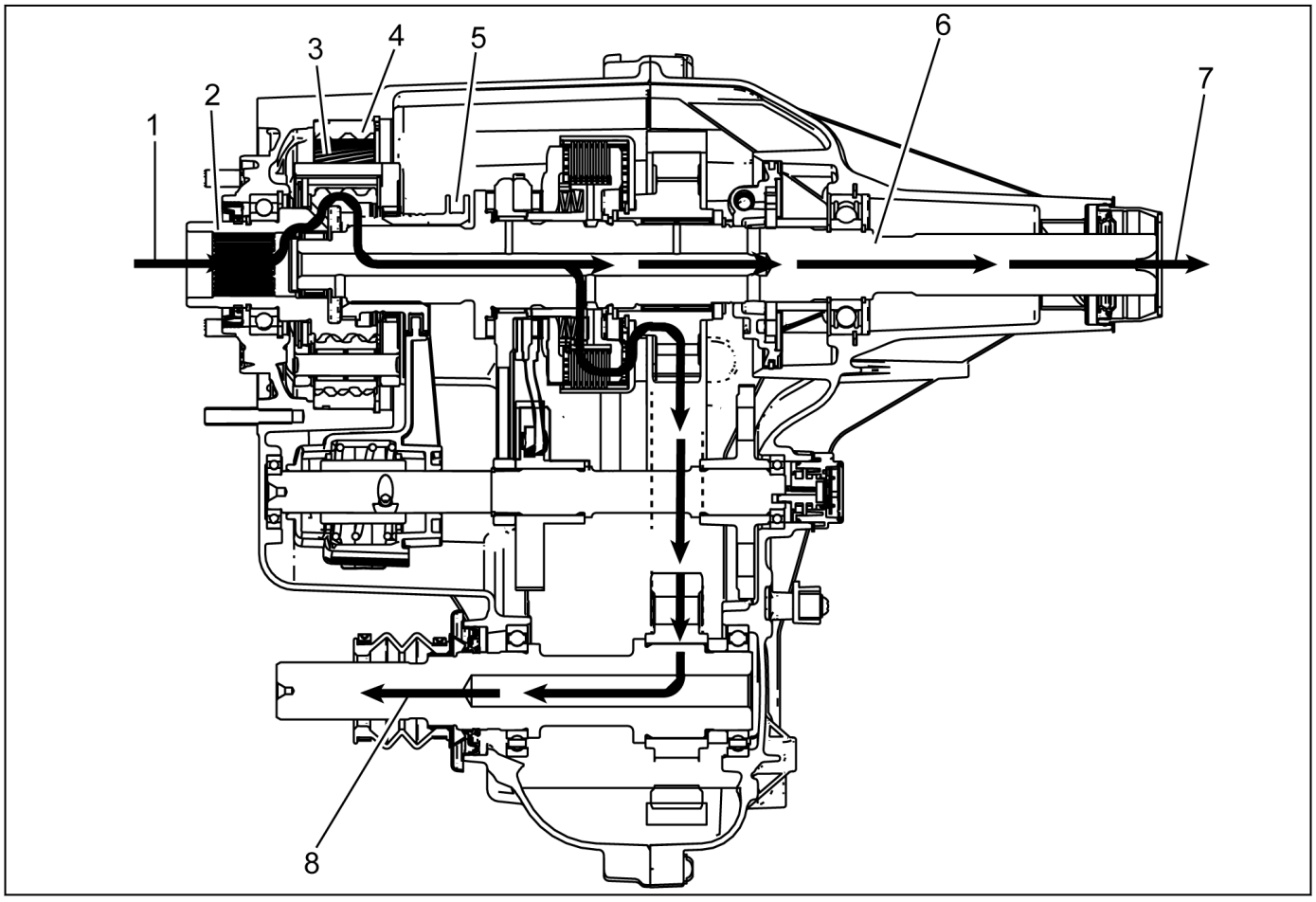

4996997

When shifting the transfer case to the 4LO mode, it commands the 2/4 wheel drive actuator assembly to turn the control actuator shaft, to move the high/low shift fork (9). The shift fork (9) moves the high/low clutch (5), which is slip splined on the rear output shaft (6) toward the rear of the transfer case. The high/low clutch (5) outer teeth disengage from the input shaft (2) inner teeth. The high/low clutch (5) outer teeth then engage in the planetary carrier teeth. The power flow is now from the input shaft (2) planetary teeth to the planetary gears (3) in the carrier. Rotating the planetary gears (3), which are engaged in the high/low internal gear (4), the planetary carrier rotates. The planetary carrier engaged to the high/low clutch (5), drives the rear output shaft (6), providing a 2.72 reduction to the speed of the rear output shaft (6). The power flow to the front propshaft (8) is the same as it is in the 4HI.

NEUTRAL Mode Power Flow

Shifting to the NEUTRAL position, the high/low clutch is centered between the input shaft and the high/low planetary carrier. The high/low clutch is not engaged with either the input shaft or the high/low planetary carrier teeth.

Service 4 Wheel Drive Message

The Service 4 Wheel Drive Message is a display within the Drivers Information Center (DIC) and cannot be serviced separately. This message is used to inform the driver that a transfer case system malfunction has occurred. The Service 4 Wheel Drive Message is controlled by the transfer case shift control module via GMLAN.

Transfer Case Two/Four Wheel Drive Actuator Assembly

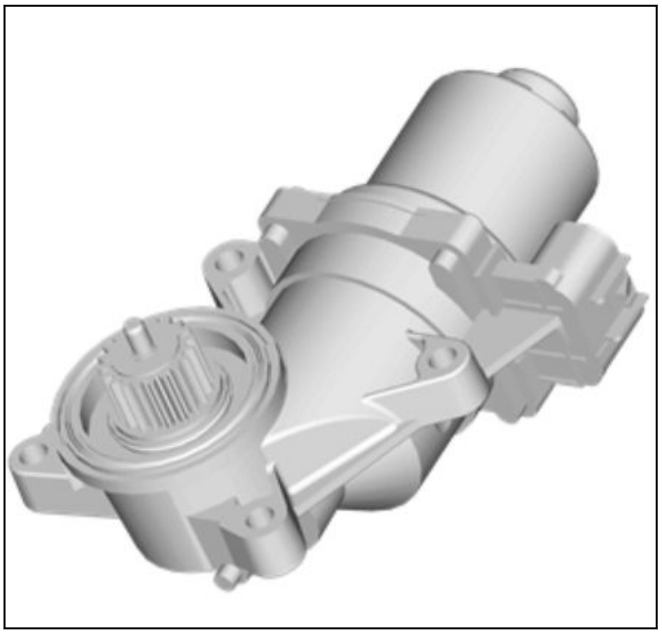

1986212

The transfer case two/four wheel drive actuator assembly consists of a permanent magnet DC motor and gear reduction assembly. It is located on the left hand side, driver's side, of the transfer case. When activated, it rotates the shift detent lever shaft of the transfer case, clockwise or counterclockwise, to shift the transfer case. The motor/encoder is controlled with a PWM signal by the transfer case shift control module. This circuit consists of a driver on both the Motor A and Motor B circuits. The encoder motor is bi-directional in order to allow the motor to shift the transfer case from 2HI or 4HI to NEUTRAL and 4LO positions. The two/four wheel drive incremental sensor and motor lock are internal to the actuator motor assembly.

Transfer Case Motor Lock

The transfer case motor lock is internal to the transfer case actuator motor and is replaced with the actuator motor as an assembly. The motor lock is used to provide a 2HI, 4HI, and 4LO motor locking feature. When the lock circuit is energized, the transfer case actuator motor is allowed to turn. When the transfer case is placed 2HI, 4HI, or 4LO the motor lock circuit is de-energized and the lock is applied. This assures that the transfer case remains in the current gear position until a new gear position is requested. When AUTO 4WD is selected, the motor lock remains applied until an adaptive mode torque being applied to the front propshaft is required. During an adaptive mode condition the motor lock circuit is energized and the motor lock is released, enabling the actuator motor to turn and apply or release torque at the front propshaft.

Transfer Case Two/Four Wheel Drive Incremental Sensor

The incremental sensor is internal to the transfer case actuator motor and is replaced with the motor as an assembly. The incremental sensor converts the shift detent lever shaft position, representing a mode or range, into an electrical signal input to the transfer case shift control module. The module detects what position the transfer case is in by monitoring the voltage returned on the incremental encoder impulse signal circuit. This voltage translates into AUTO 4WD, 2HI, 4HI, NEUTRAL, and 4LO or in transition between gears.

Transfer Case Actuator Shaft Position Sensor Assembly

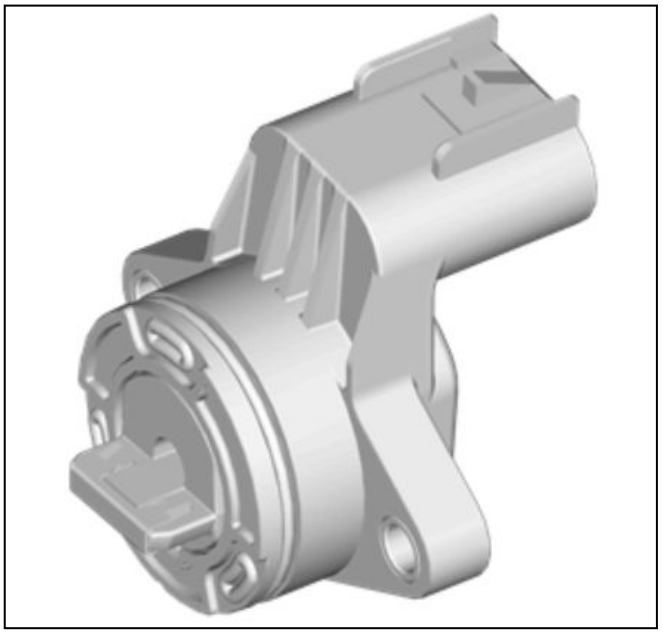

1986213

This sensor works in conjunction with the incremental sensor and shows transfer case position in degrees.

Transfer Case Shift Control Module

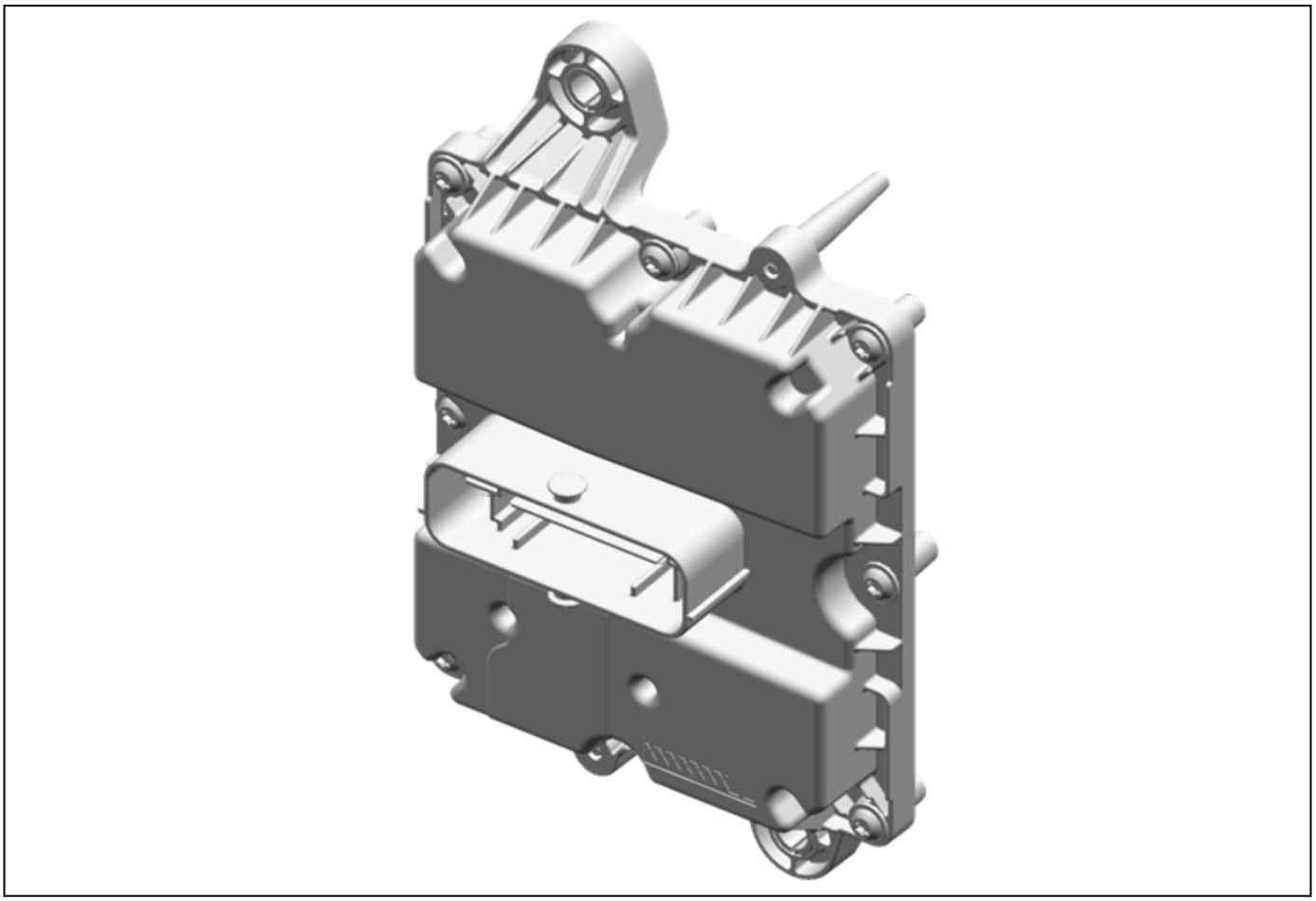

5071149

The transfer case shift control module uses the vehicle identification number (VIN) information for calculations based on axle ratio, transmission, tire size, and engine size. For StabiliTtrak applications, when the vehicle is in the AUTO 4WD mode, the transfer case shift control module monitors the wheel speed via the four wheel speed sensors in order to detect wheel slippage. For non-StabiliTrak applications, when the vehicle is in the AUTO 4WD mode, the transfer case shift control module monitors the wheel speed via the two front wheel speed sensors and the vehicle speed sensor in order to detect wheel slippage. When wheel slippage is detected, the module applies a clutch pack contained inside the transfer case. This clutch pack is used to lock-in and apply the front propshaft, transferring torque to the front wheels. The clutch pack is applied by a motor/encoder assembly. When slip is no longer detected by the transfer case shift control module, the clutch is no longer applied.

A

A11 Radio
Programming and Setup. 2-7
Scan Tool Information. 2-74
ABS
Description and Operation. 1-6
Active Noise Cancellation
Description and Operation. 3-20
Active Safety System
Description and Operation. 7-15, 7-19
Adaptive Cruise Control
Description and Operation. 7-23
Audible Warnings Description and Operation. 3-41
Automatic HVAC Description and Operation. 5-13

B

B174W Front View Camera - Windshield
Programming and Setup. 2-11
Scan Tool Information. 2-77, 2-78
B218L Side Obstacle Detection Control Module - Left
Programming and Setup. 2-12
Scan Tool Information. 2-78
B218L Side Obstacle Detection Control Module - Right
Programming and Setup. 2-13
B218R Side Obstacle Detection Control Module - Right
Scan Tool Information. 2-79
B233B Forward Range Radar Sensor - Long Range
Programming and Setup. 2-14
Scan Tool Information. 2-80
B233LF Short Range Radar Sensor - Left Front
Programming and Setup. 2-15
Scan Tool Information. 2-81
B233LR Short Range Radar Sensor - Left Rear
Programming and Setup. 2-15, 2-17, 2-18, 2-19
Scan Tool Information. 2-81, 2-82, 2-83, 2-84
B233RF Short Range Radar Sensor - Right Front
Programming and Setup. 2-16
Scan Tool Information. 2-82
B233RR Short Range Radar Sensor - Right Rear
Programming and Setup. 2-15, 2-17, 2-18, 2-19
Scan Tool Information. 2-81, 2-82, 2-83, 2-84
B233SL Short Range Radar Rear Side Sensor - Left
Programming and Setup. 2-15, 2-17, 2-18, 2-19
Scan Tool Information. 2-81, 2-82, 2-83, 2-84
B233SR Short Range Radar Rear Side Sensor - Right
Programming and Setup. 2-15, 2-17, 2-18, 2-19
Scan Tool Information. 2-81, 2-82, 2-83, 2-84
Battery
Description and Operation. 4-8
Brake Assist System
Description and Operation. 1-16

C

Charging System
Description and Operation. 4-9
Component Connector End Views. 6-86
Control Module References. 2-4

D

Data Link Communications
Description and Operation. 6-32
Diagnostic Procedure Instructions. 2-288
Diagnostic Repair Verification. 2-375
Diagnostic Starting Point
Vehicle DTC Information. 2-296
Diagnostic System Check
Instructions. 2-290
Vehicle DTC Information. 2-296
Diagnostic Trouble Code (DTC) List
Vehicle DTC Information. 2-301
Disc Brake
System Description and Operation. 1-13
Door Ajar Indicator
Description and Operation. 0-78
Drive Mode
Description and Operation. 3-56
Driver Monitoring
Description and Operation. 7-41
DTC Status Information. 2-299

E

Electrical Center Identification Views. 6-36
Electrical Power Management Description and
Operation. 4-11
Electrical Schematic Symbols. 6-846
Engine Cranks But Does Not Run. 2-375
Engine Does Not Crank. 2-375
Exterior Lighting Systems
Description and Operation. 0-40

F

Forward Collision Alert
Description and Operation. 7-29, 7-31
Fuel Fill Door
Description and Operation. 0-78
Fuel Pump Power Control Module
Programming and Setup. 2-59
Scan Tool Information. 2-286

G

Garage Door Opener
Description and Operation. 7-64

H

Harness Routing Views. 6-744
Head-up Display
Description and Operation. 3-42
Heated/Vented
Description and Operation. 8-27
Hood Ajar Indicator
Description and Operation. 0-78
Horn
System Description and Operation. 0-11
How to Use Electrical Schematics. 6-820
Hydraulic Brake
System Description and Operation. 1-21

I

Immobilizer
Description and Operation. 7-45
Indicator/Warning Message
Description and Operation. 3-43
Inline Harness Connector End Views. 6-609
Inspection/Maintenance (I/M)
System Check. 2-375
Instrument Cluster
Description and Operation. 3-43
Interior Lighting System
Description and Operation. 0-44

K

K124 Image Processing Module
Programming and Setup. 2-44, 2-45
Scan Tool Information. 2-261, 2-265
K160 Brake System Control Module
Programming and Setup. 2-45
Scan Tool Information. 2-268
K164 Differential Control Module
Programming and Setup. 2-47
Scan Tool Information. 2-275
K175 Center Console Compartment Cooler Control Module
Programming and Setup. 2-48
K180 Driver Monitoring System Control Module
Programming and Setup. 2-49
Scan Tool Information. 2-278
K182 Parking Assist Control Module
Programming and Setup. 2-49, 2-51
Scan Tool Information. 2-278
K183 Near Field Communication Module
Scan Tool Information. 2-282
K183 UHF Short Range Low Energy Remote Control Access Transceiver
Programming and Setup. 2-51
K194 Rear Gate Module
Programming and Setup. 2-52
Scan Tool Information. 2-283
K19 Suspension Control Module
Programming and Setup. 2-23
Scan Tool Information. 2-127
K20 Engine Control Module
Programming and Setup. 2-24
Scan Tool Information. 2-127, 2-160
K212 Gear Shift Control Module
Programming and Setup. 2-26
K219 Lighting Control Module
Programming and Setup. 2-26
Scan Tool Information. 2-224
K29FV Front Seat Heater Vent Control Module
Programming and Setup. 2-28
Scan Tool Information. 2-226
K29RV Rear Seat Heater Vent Control Module
Programming and Setup. 2-28
Scan Tool Information. 2-228
K36 Restraints Control Module
Programming and Setup. 2-28
Scan Tool Information. 2-229
K38 Chassis Control Module
Programming and Setup. 2-30
Scan Tool Information. 2-232
K40D Driver Seat Adjuster Memory Module
Programming and Setup. 2-30
Scan Tool Information. 2-239
K40P Passenger Seat Adjuster Memory Module
Programming and Setup. 2-31
Scan Tool Information. 2-242
K43 Power Steering Control Module
Programming and Setup. 2-32
Scan Tool Information. 2-244
K4 Assist Step Control Module
Programming and Setup. 2-19
Scan Tool Information. 2-84
K56 Serial Data Gateway Module
Programming and Setup. 2-33
K56U Special Purpose Vehicle Module
Programming and Setup. 2-35
K5 Automatic Level Control Module
Programming and Setup. 2-20
Scan Tool Information. 2-85
K60 Column Lock Module
Programming and Setup. 2-35
Scan Tool Information. 2-246
K61 Sunroof Control Module
Programming and Setup. 2-37
K67 Trailer Brake Control Module
Programming and Setup. 2-37
K68 Trailer Lighting Control Module
Programming and Setup. 2-37
Scan Tool Information. 2-247
K69 Transfer Case Control Module
Programming and Setup. 2-37
Scan Tool Information. 2-247
K71 Transmission Control Module
Programming and Setup. 2-38
Scan Tool Information. 2-252
K73 Communication Interface Module
Programming and Setup. 2-40
Scan Tool Information. 2-258
K85P Restraints Occupant Classification System Module
Passenger: Programming and Setup. 2-42
Passenger: Scan Tool Information. 2-260
K99 Steering Column Control Module
Programming and Setup. 2-44
K9 Body Control Module
Programming and Setup. 2-21
Scan Tool Information. 2-87
Keyless Entry
System Description and Operation. 7-64

L

Lane Keep Assist
Description and Operation. 7-31

Liftgate
Ajar Indicator Description and Operation. 0-79
Description and Operation. 0-79, 0-80
Lumbar Support/Massage
Description and Operation. 8-12

M

Memory Seats
Description and Operation. 8-13
Mobile Device Wireless Charger
Description and Operation. 6-816

O

OnStar
Description and Operation. 3-21
Outside Mirror
Description and Operation. 0-51
Over The Air Description and Operation
Programming and Setup. 2-70

P

P16 Instrument Panel Cluster Control Module
Programming and Setup. 2-56
Scan Tool Information. 2-284
Parking Assist
Description and Operation. 7-51, 7-52
Power Door Locks
Description and Operation. 0-82
Power Mode Description and Operation. 6-922
Power Outlets
Description and Operation. 6-817
Power Seats
System Description and Operation. ... 8-16, 8-17, 8-19
Power Steering System
Description and Operation. 9-4
Powertrain Diagnostic Trouble Code (DTC) Type
Definitions. 2-300
Power Windows
Description and Operation. 0-7
Proactive Alerts
Description and Operation. 2-376
List. 2-376

Q

Q77 Transmission Control Solenoid Valve
Characterization Programming. 2-61

R

Radio/Audio System
Description and Operation. 3-26
Rear Heated Seats
Description and Operation. 8-28
Rearview Camera
Camera Full Display Mirror Description and
Operation. 3-50
Rear Vision Camera
Description and Operation. 3-50
Rear Window Defogger
Description and Operation. 0-7
Remote Vehicle Speed Limiting
Description and Operation. 7-46
Remote Vehicle Speed Limiting Description and
Operation. 7-46
Retained Accessory Power
Description and Operation. 6-925

S

Safety Alert Seat
Description and Operation. 7-33
Schematics
ABS. 1-3
Audible Warnings. 3-40
Automatic Transmission Controls. 10-3
Auxiliary Battery. 4-7
Body Control Systems. 6-28
Cigar Lighter/Power Outlet. 6-811
Column Lock. 9-8
Data Communications. 6-3
Defogger. 0-6
Disc Brake. 1-12
Door Lock/Indicator. 0-67
Driver Assistance Systems. 7-4
Driver Monitoring. 7-39
Driver Seat. 8-3
Electronic Transmission Range Selector. 10-9
Exterior Lamps. 0-17
Fog Lamps. 0-16
Headlamps/Daytime Running Lamps. 0-13
Head-up Display. 3-39
Heated/Cooled Seat. 8-21
Hood Latch. 0-75
Horns. 0-10
HVAC Systems - Automatic. 5-3
Hydraulic Brake. 1-15
Image Display Cameras. 3-45
Immobilizer. 7-44
Inside Rearview Mirror. 0-47
Instrument Cluster. 3-37
Interior Lamps. 0-28
Interior Lamps Dimming. 0-34
Liftgate. 0-76
Moveable Window. 0-3
OnStar. 3-15
Outside Rearview Mirror. 0-48
Parking Assistance Systems. 7-48
Passenger Seat. 8-7
Power Distribution. 6-863
Power Moding. 6-904
Power Steering System. 9-3
Radio/Navigation. 3-3
Rear Seat. 8-9
Release Systems. 0-72
Remote Function. 7-58
Seat Belts. 7-70
SIR. 7-75
Starting and Charging. 4-3
Steering Wheel. 9-6

Steering Wheel Secondary/Configurable
Control. 3-53
Theft Deterrent. 7-84
Tilt/Telescoping Steering Column. 9-9
Trailering Systems. 0-53
Transfer Case Control. 10-12, 10-26
Upfitter Provision. 6-906
Video System. 3-17
Wiper and Washer Systems. 0-85
Seat Belt
System Description and Operation. 7-72
Serial Data Authentication Configuration. 2-59
Service Programming System (SPS). 2-60
Side Blind Zone Alert
Description and Operation. 7-34
Special Purpose Vehicle Module
Description and Operation. 6-926
Special Tools
Programming and Setup. 2-72
Starting System
Description and Operation. 4-14
Steering Wheel and Column
Description and Operation. 9-10
Steering Wheel Controls
Description and Operation. 3-56
Stop/Start System
Description and Operation. 4-15
Strategy Based Diagnosis. 2-286
Super Cruise
Description and Operation. 7-36
Supplemental Inflatable Restraint
System Description and Operation. 7-79
Surround Vision Camera
Description and Operation. 3-50
Symptom Byte List. 2-364
Symptoms
Vehicle DTC Information. 2-374

T

T1 Accessory AC and DC Power Control Module
Programming and Setup. 2-58
T22 Wireless Accessory Charging Module
Programming and Setup. 2-59
Scan Tool Information. 2-286
T3 Audio Amplifier
Programming and Setup. 2-58
Scan Tool Information. 2-285
Theft Systems
Description and Operation. 7-86
Trailering Description and Operation. 0-58
Trailering Systems Schematics. 0-53
Transfer Case
Description and Operation. 10-15, 10-29

W

Wiper/Washer
System Description and Operation. 0-89