POLICE
GENERAL MOTORS

2027

TAHOE 9C1 PPV



Shown with equipment from independent suppliers not covered by the GM New Vehicle Limited Warranty GM is not responsible for the safety or quality of independent supplier alterations.

gm Fleet

About This Publication

This catalog is not updated during the model year and should not be used for ordering purposes. It is intended as a source of basic information. All illustrations and specifications in this literature are based on the latest product information available at the time of publication. General Motors reserves the right to make changes at any time without notice. For further details, consult your local dealer.

Care must be taken during customer installation of equipment and wiring to ensure that all holes drilled in the body are corrosion protected, properly sealed and that vehicle wiring harnesses, piping or other components have not been displaced or damaged. Aftermarket equipment installers must be mindful of applicable Federal Motor Vehicle Safety Standards. This information can be obtained directly from the National Highway Traffic Safety Administration. Adding non-dealer accessories or making modifications to the vehicle can affect vehicle performance, aerodynamics, and overall top speed. Please return all police vehicles to factory condition and settings upon decommissioning to prevent civilians from using these new 2027 calibrations, lighting and other features intended only for police and emergency customers. Wiring connection or splice changes are to be removed before the vehicle is returned to civilian use.

These vehicles are equipped with an airbag system. The airbag system in your police vehicle includes frontal driver and front outboard passenger airbags, front seat back side impact airbags and Head-curtain airbags for all rows in outboard seating positions. Customer installed equipment such as security barriers behind the front seats should not be mounted so that the barrier ends are within the side airbag deployment zones. The sensors and other components for the airbag system must not be relocated to accommodate the installation of customer furnished equipment; please refer to the service manual for sensor and other component locations. For information concerning instrument panel top pad mounted equipment and airbag system deployment zones, see the airbag information section in this catalog and the vehicle owner's manual.

A note about vehicle alterations by independent suppliers: This catalog shows pictures of vehicles that have been altered or upfitted with equipment or components supplied to Chevrolet or its dealers by independent suppliers. GM is not responsible for the safety or quality of design features, materials or workmanship of any alterations by third parties.

Copyright 2026 General Motors. All rights reserved. Chevrolet and the Chevrolet Emblem are registered trademarks of General Motors LLC.

INDEX

2027 TAHOE 9C1
POLICE PERFORMANCE PACKAGE

- STANDARD FEATURES 5-8
- OPTIONAL FEATURES 9-11
- POWERTRAIN, EMISSIONS & TIRES 12
- ENGINE AND STANDARD WHEEL 13
- SPECIFICATIONS 14-15
- APPROACH AND DEPARTURE ANGLE 16
- DIMENSIONS FOR BODY WRAP/GRAPHICS 17
- SPEEDOMETER/CLUSTER DISPLAY 18
- VEHICLE PERSONALIZATION MENU 19
- LOCK / UNLOCK FUNCTION 20
- OPTIONAL SAFETY & DRIVER ASSISTANCE FEATURE HIGHLIGHTS 21
- STANDARD FEATURE HIGHLIGHTS 22-31
- COLORS, EXTERIOR AND INTERIOR 32
- SEATS & INTERIOR TRIM 33-34
- OPTIONAL FEATURE HIGHLIGHTS 35-41
- UPFITTER WIRING INFORMATION 42-60
- VEHICLE LOAD LIMITS & ZONES 61-62
- AIRBAG DIMENSIONS & FAQ 63-65
- OnStar® OPTIONS 66
- MAINTENANCE AND LIMITED WARRANTY 67
- UPFITTER INTEGRATION LINKS 68

NEW FEATURES

- Exterior color (G42) White Sands 32



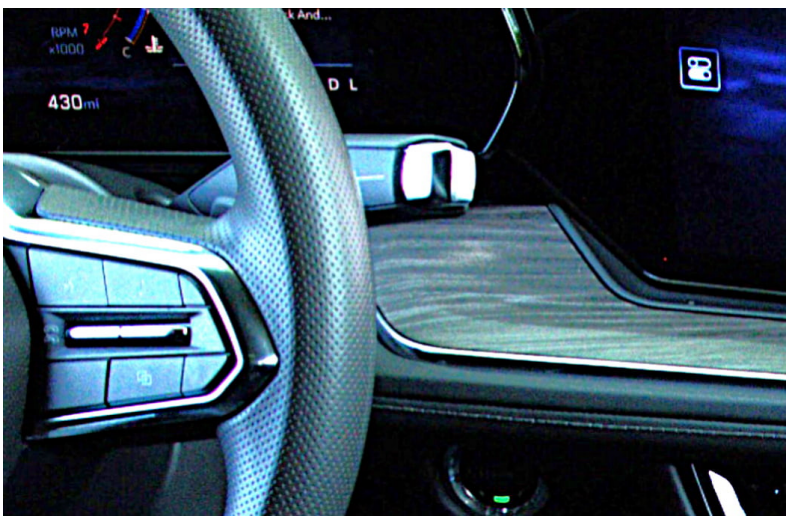



This document shows vehicles that have been altered or upfitted with equipment, bodies or components. GM is not responsible for the safety or quality of design features, materials or workmanship of any alterations by third parties.

The two-wheel drive and four-wheel drive Tahoe (9C1) Police Package has been designed for police work up to, and including high-speed emergency vehicle operations.

GM restricts the sale of police vehicles and they are not to be sold to retail customers.

Model CC10706 (two-wheel drive) or CK10706 (four-wheel drive). Content, Options and Specifications shown are for the police version only which differ from retail civilian model.

9C1 PPV Package includes: Heavy-duty police-rated suspension with unique StabiliTrak performance calibration. Full independent suspension with mono-tube dampers, linear coil springs that set the trim height 20mm lower than civilian model, 35mm solid front stabilizer bar, 32mm hollow rear stabilizer bar. Police specific Brembo front brakes utilize 6-piston fixed calipers on 410mm rotors (32mm thick), 1-piston sliding rear calipers on 345mm rotors (20mm thick). 275/55R20SL all-season V-Rated Firestone Firehawk Pursuit tires are mounted on 20" heavy-duty black steel wheels with bolt-on center caps and includes a matching full-size spare. High-capacity air filter, dual battery isolator with 760 cold-cranking amp auxiliary battery, 250 amp high output alternator, auxiliary battery circuit for customer connection located in rear cargo area, electrical power & vehicle signals for customer located on center front floor and cargo area with surveillance mode circuit. Certified speedometer, work truck steering wheel with two re-purposed switches to operate after-market emergency equipment. Surveillance Mode interior lighting calibration, blunt cut cargo area and blunt cut console area ground wires, delete luggage rack side rails, third row seat delete are standard. Police specific front seat backs and bolsters are skived to better accommodate officers wearing duty belts. Available 4WD with active single-speed transfer case. TAHOE nameplate badging is deleted from side doors and lift-gate.

STANDARD 9C1 INTERIOR FEATURES

AIRBAGS[1]	Frontal airbags for driver and front outboard passenger with automatic front passenger sensing for airbag cut-off, Seat-mounted side-impact airbags for driver and front outboard passenger; Head-curtain airbags for all rows in outboard seating positions.
AIR FILTER	Located behind the passenger side glove box. Reduces dust, pollen, and other airborne irritants pulled into the vehicle.
AIR CONDITIONING	Tri-zone automatic climate control, with individual climate settings for driver, right front passenger and rear seat occupants. Includes rear air conditioning.
AIR FILTER	This filter is located behind the passenger side glove box.
ASSIST HANDLES	Overhead, driver and front passenger, located in headliner. Front passenger A-pillar and second row outboard B-pillar. Not available with (7X2) or (7X3) spotlights.
AUDIO SYSTEM[2]	6-speaker system with 17.7" diagonal advanced color LCD display with Google built-in compatibility (select service plan required, terms and limitations apply), including navigation capability, connected apps, personalized profiles for each driver's settings, Natural Voice Recognition and Phone Integration.
BLUETOOTH®[3]	Personal cell phone connectivity to vehicle audio system.
BUCKLE TO DRIVE	Helps remind the driver to buckle up their seat belt before driving by preventing the vehicle from being shifted out of PARK temporarily when the driver's seat belt is not buckled. On some vehicles the feature also reminds the front passenger to buckle up. Times out after 20 seconds and encourages seat belt use, can be turned on and off in Settings or Teen Driver menu This feature is defaulted off for 9C1, but can be turned on in the infotainment menu.
COMPASS	Displayed in digital gauge cluster (see Picture on Speedometer/Cluster page).
CONSOLE, OVERHEAD	Includes map lights, OnStar buttons and Passenger air bag indicator.
CRUISE CONTROL	Electronic with set and resume speed.
DOOR LOCKS	Rear Child Security, manual; Front power programmable with lockout protection. Auto Lockout is disabled on driver door.
DRIVER INFORMATION CENTER	11" diagonal multi-color digital display, includes driver personalization.
FLOOR COVERING	Black rubberized vinyl. Deleted when (B30) floor covering is ordered.
KEYLESS OPEN	Keyless Open allows you to lock and unlock the vehicle using the driver door or front passenger door handle without taking the remote key out your pocket. Keyless open, with the remote key in your possession, locks and unlocks your vehicle's doors without having to use the remote key, increasing convenience. If the remote key battery is depleted or due to wireless interference, vehicle may be unlocked using the mechanical key. See Owner's Manual for details.
KEYLESS START	Keyless Start allows you to start the vehicle when the remote key is inside the vehicle at the front seats and without taking the remote key out of your pocket. Keyless start uses an integrated remote key sensor instead of a traditional key. If the remote key battery is depleted or due to wireless interference, vehicle may also be started by resting the remote key on top of the start button. See Owners Manual for details.
GLASS	Deep-tinted, all windows (except for windshield, and front doors side glass which are light-tinted). Windshield: >70% visible light transmittance; Front Doors: >70% visible light transmittance (UV is reduced to 35% or less); Rear Doors and Cargo Area: 12% +/-3% visible light transmittance. (AKP) Non-tinted, solar absorbing glass available.
GLOVE BOX	Locking door, includes courtesy light.
HD REAR VISION CAMERA[4]	Shows you a high-resolution digital image of the area directly behind your vehicle when in Reverse to help you park and avoid vehicles and objects. You can also display an overlay of where your vehicle is heading.
HD SURROUND VISION[4]	Provides selectable digital camera views of the area around your vehicle to help you park and avoid vehicles and objects. Enables and includes Surround Vision Recorder. You can also display a guideline to show where your vehicle is heading. Includes instant ON hard button, left of steering wheel.
INSTRUMENTATION	Certified 140 mph speedometer, odometer with trip odometer, engine hour meter, engine idle meter, fuel level, voltmeter, engine temperature, oil pressure and tachometer.
LIGHTING	Interior with dome light, cargo lights, door handle or Remote Keyless Entry-activated illuminated entry and map lights in front and second seat positions with control switch in the roof console
MIRROR, INSIDE	Rear-view, manual day/night.
MICROPHONE, WIRING	Provision located above headliner over driver position for customer supplied microphone and department radio.

1. Always use seat belts and child restraints. Children are safer when properly secured in a rear seat in the appropriate child restraint. See the Owner's Manual for more information.
2. Vehicle user interface is a product of Apple and its terms and privacy statements apply. Requires compatible iPhone and data plan rates apply. Apple CarPlay is a trademark of Apple Inc. Siri, iPhone and iTunes are trademarks of Apple Inc., registered in the U.S. and other countries. Vehicle user interface is a product of Google and its terms and privacy statements apply. Requires the Android Auto app on Google Play and an Android compatible smartphone running Android 5.0 Lollipop or higher.
3. Go to my.chevrolet.com/learn to find out which Bluetooth phones are compatible with the vehicle.
4. Safety or driver assistance features are no substitute for the driver's responsibility to operate the vehicle in a safe manner. The driver should remain attentive to traffic surroundings and road conditions at all times. Visibility, weather, and road conditions may affect feature performance. Read the vehicle's owner's manual for more important feature limitations and information.

STANDARD 9C1 INTERIOR FEATURES (CONTINUED)

OnStar® BASICS (OnStar® Fleet Basics for Fleet)	Drive confidently with core OnStar services including remote commands, built-in voice assistance, real-time traffic and navigation and Automatic Crash Response to help if you're in need. Requires (UE1) OnStar services capable. OnStar Basics is standard for 8 years; working electrical system, cell reception and GPS signal required. OnStar links to emergency services. Service coverage varies with conditions and location. Service availability, features and functionality vary by model year, vehicle, device and software version. Includes available audio apps only. Third-party services may require separate subscription. Subject to user terms. See onstar.com for details and limitations.
OnStar® SERVICES CAPABLE	On 4WD model, deleted when (UDA) OnStar deactivated is ordered. See onstar.com for details and limitations. Services vary by model. Service plan required.
OUTSIDE TEMPERATURE	Displays in top left corner of Driver Information Center and lower right corner of Infotainment screen.
POWER OUTLETS	Two, 120-volt, 3.33-amp, 400-watts outlets, located on the rear of the center seat and rear cargo area.
PROTECTED IDLE	Allows vehicle engine to remain idling and vehicle immobilized while REMOTE KEY is outside vehicle.
REAR PEDESTRIAN ALERT[2]	When in REVERSE, can alert you to detected pedestrians directly behind your vehicle. It has limited night time and low visibility performance. RPO (UKK)
REMOTE KEY	Two programmed remote keys with mechanical key for ignition. See Optional Features page for fleet key ordering codes (6E2)/(6E8).
REMOTE START	Includes remote keyless entry.
REMOTE KEYLESS ENTRY PACKAGE	Includes 4 additional transmitters. Programming remotes is at Customer's expense. Programming remotes is not a warranty expense. See programming remote key instructions shown on STANDARD EQUIPMENT page.
RESTRAINT SYSTEM[1]	Seat belts at all designated seating positions with driver and front outboard passenger pretensioners. Frontal airbags for driver and front outboard passenger includes front outboard Passenger Sensing System. Seat mounted side-impact airbags for driver and front outboard passenger. Head Curtain airbags for all rows at all outboard seating positions. Note: Nine inch seat belt extenders are available (part number 19259268) through dealer at no charge.
SEAT	(5T5) Front cloth with vinyl rear seat (see front seats and interior trim illustration page for description).
SEATS, FRONT	Cloth 40/20/20 individual seats. 3 passengers with 8-way power driver seat and 6-way power passenger seat. Includes 2-way lumbar.
SEATS, REAR	Vinyl split-folding 60/40 bench seats includes folding center armrest with cup holders, outboard seating position headrests and reclining rear back. 3rd row seats not available.
SIRIUS XM	Deleted.
STEERING COLUMN	Manual tilt and telescopic. Electrical lock.
STEERING WHEEL CONTROLS	The steering wheel includes control buttons for Cruise Control and Forward Collision Alert following gap button (if equipped), Driver Information Center and the Vehicle Radio. The two-position Radio Favorites up/down buttons on the left backside of the steering wheel have been re-purposed for operating customer furnished equipment, i.e., push-to-talk microphone, emergency warning devices, etc. The re-purposed Radio Favorites button no longer permits the selection of the radio broadcast stations.
SURROUND VISION RECORDER	Surround Vision Recorder lets you record, view and save videos that your vehicle captures using the Surround Vision cameras[2] when your vehicle is on. When enabled through the Infotainment screen, this feature will record footage from the Surround Vision cameras and save it to the USB drive. The system is designed to record 2-hour loops at a time. Check your vehicle Owner's Manual for the location of this feature's USB port and any requirements for the USB drive. When in PARK, you can scroll through and watch captured footage. The system will automatically save each trip you take as a separate video. You can also export footage from each camera if you want to see videos from a specific view.
TEEN DRIVER[2]	When a Teen Driver-designated key fob is used, it helps encourage better driving habits for teens by providing an in vehicle report card. It also activates certain safety systems when a Teen Driver-designated key fob is used and mutes the radio until the front seat occupants fasten their seat belts. This feature can be turned off and on in the infotainment menu.
THEFT DETERRENT SYSTEM	PASS-Key III content, electrical, unauthorized entry.
USB CHARGING PORTS	Charge and data, located inside center console. 2 type-A and C, charge and data, located on front console. 2 type-C, charge-only, located in third row.
VISORS	Driver and front passenger illuminated vanity mirrors, sliding.
WARNING TONES	Headlamp on, key-in-ignition, driver and right-front passenger seat belt unfastened, backup sensor with warning tone and turn signal on.
Wi-Fi	5G Wi-Fi Hotspot capable. Requires (UE1) OnStar. Terms and limitations apply. See onstar.com or dealer for details.
WI-FI HOTSPOT	Available Wi-Fi hotspot can connect up to 7 devices; includes data trial for 1 month or 3GB (whichever comes first). requires properly equipped vehicle. Service varies with conditions and location. Requires active service plan. Data plans provided by AT&T, subject to change. Visit www.gmfleet.com/technology/connected-vehicle.html for details and limitations.
WINDOWS, POWER	Power driver and passenger with Express-Up/Down. Power with rear Express-Down.
WIRELESS APPLE CARPLAY/ ANDROID AUTO[3]	Apple CarPlay is a trademark of Apple Inc. Vehicle user interface is a product of Apple and its terms and privacy. Requires compatible iPhone and data plan (rates apply). Android Auto vehicle user interface is a product of Google and its terms and privacy statements apply. Requires the Android Auto app on Google Play and an Android compatible smartphone running Android 5.0 Lollipop or higher.

1. Always use seat belts and child restraints. Children are safer when properly secured in a rear seat in the appropriate child restraint. See the Owner's Manual for more information.
2. Safety or driver assistance features are no substitute for the driver's responsibility to operate the vehicle in a safe manner. The driver should remain attentive to traffic surroundings and road conditions at all times. Visibility, weather, and road conditions may affect feature performance. Read the vehicle's owner's manual for more important feature limitations and information.
3. Vehicle user interface is a product of Apple and its terms and privacy statements apply. Requires compatible iPhone and data plan rates apply. Apple CarPlay is a trademark of Apple Inc. Siri, iPhone and iTunes are trade marks of Apple Inc., registered in the U.S. and other countries. Vehicle user interface is a product of Google and its terms and privacy statements apply. Requires the Android Auto app on Google Play and an Android compatible smartphone running Android 5.0 Lollipop or higher. Data plan rates apply. Android Auto is a trademark of Google LLC.

STANDARD 9C1 EXTERIOR FEATURES

ASSIST STEPS	Black, mounted between front and rear wheels.
BODY SIDE MOLDINGS	Not available.
CAPLESS FUEL FILL	The vehicle has a capless refueling system and does not have a fuel cap. The filling nozzle must be fully inserted and latched prior to starting fuel flow. NOTE: Overfilling the fuel tank by more than three clicks of a standard fill nozzle may cause vehicle performance issues, including engine stalling and damage to the fuel system, fuel spills, potential fuel fires.
DEFOGGER	Electric, rear window.
DOOR HANDLES	Body color
DOOR LOCKS	Door locks can be programmed via radio settings menu. Lock cylinder is only available on driver door. Other side doors and lift gate are controlled by driver door-mounted switches. Includes 2 remote transmitters. See also LOCKOUT PROTECTION.
FASCIA, FRONT	Front high-approach angle with recovery hook openings, but does not include hooks. See Option (V76) for recovery hooks.
FLASHER SYSTEM	Headlamp and taillamp, DRL compatible with individual control wires. Includes SEO (5J9) taillamp flasher calibration, Red/White and SEO (5LO) taillamp flasher calibration, Red/Red. See headlamp circuit 8863 and taillamp circuits 8864 & 8865 in wiring schematic.
FOG LAMPS	Not available.
HEADLAMPS	LED Reflector high and low beam with flash-to-pass feature, automatic exterior lamp control and daytime running lamps. Daytime running lamps use reduced low-beam intensity. Altering headlamp assembly is not recommended, General Motors is not responsible for the effects of any modifications.
HORNS	Dual note.
LUGGAGE RACK	Deleted as Standard.
MIRRORS, OUTSIDE	Outside heated power-adjustable, manual-folding, body-color.
RADIO ANTENNA	Located inside liftgate spoiler.
REAR LIFTGATE	Manual gate and hinged glass hatch. Unlock buttons located on exterior and remote REMOTE KEY. Unique police programming only allows unlocking with the REMOTE KEY or interior courtesy switch.
REAR PARK ASSIST[1]	When you're in REVERSE, provides alerts of nearby detected vehicles and objects behind your vehicle to help you park and avoid collisions. Ref. RPO (UD7)
RECOVERY HOOKS[2]	(2) Front, Frame Mounted, Black. All Tahoe 9C1 Police Vehicles will include front fascia recovery hook openings.
TIRES	Firestone Firehawk Pursuit 275/55R20SL all-season, V-rated, blackwall, (see standard equipment illustrations section)
TIRE PRESSURE MONITOR	Includes Tire Fill Alert feature in addition to the DIC warning when a tire has low pressure. This feature provides audible and visual indication when air is being added to the low tire to aid in achieving optimal tire pressure.
TIRE, SPARE	Full-size matching spare with unprogrammed TPM, lockable with outside winch-type carrier mounted under frame at rear.
UNDER HOOD LAMP	Not available.
WHEELS	20" x 9" black steel (includes matching full-size spare).
WHEEL CENTER CAP	Bolt-on aluminum with black finish.
WINDSHIELD	Solar absorbing shaded upper with acoustic laminated glass.
WIPERS, WINDSHIELD	Intermittent, with rain sensing.
WIPER, REAR	Intermittent with washer.

STANDARD 9C1 ELECTRICAL FEATURES

AUXILIARY POWER, FRONT	Wiring connection from circuits in upfitter branch harness between front seats. Two relays, rated at 20 amp load, and one 50 amp auxiliary battery circuit for connection and control by customer. The relay coil fusing can be configured to operate the pair of relays via battery power or ignition controlled power. See the Upfit Circuits List and Wiring diagrams for 50E FUSE BLOCK AUXILIARY BATTERY and X51 JUNCTION BLOCK INSTRUMENT PANEL AUXILIARY.
AUXILIARY POWER, REAR	Wiring connection from circuits in upfitter branch harness at left side of cargo area. Two relays, rated at 20 amp load, and one 100 amp auxiliary battery circuit for connection and control by customer. The relay coil fusing can be configured to operate the pair of relays via battery power or ignition controlled power. See the Upfit Circuits List and Wiring diagrams for 50E FUSE BLOCK AUXILIARY BATTERY and X51 JUNCTION BLOCK INSTRUMENT PANEL AUXILIARY.
LOCK-OUT PROTECTION	When a key is in the vehicle and the driver door is open with the ignition ON or ACC, an audible alarm will sound. If the doors are locked and closed, the driver door will not unlock. The engine will remain running if ON. When the ignition is OFF and the last door is closed and there is a key in the front seat area of the vehicle, the driver door will unlock. See also the PROTECTED IDLE procedure in the Standard Equipment section of this document.
SURVEILLANCE FEATURE	Body Control Module (BCM) calibration to disable all automatic lighting. See UPFIT WIRING CIRCUITS LIST.
UNIVERSAL VEHICLE MODULE	Provides CAN Readability of selected messages utilizing SAE J1939 formatting. This gateway module offers 10-switchable inputs and outputs, and includes a GUI (Graphical User Interface) available to customize the UVM to specific needs.
UPFITTER WIRING PROVISIONS	Upfitter wiring circuits are provided in two branch harnesses to centralize upfitter connections to vehicle systems. One branch is coiled between the front seats, the second is coiled on the left side cargo area floor to the rear of the auxiliary battery. Each upfitter branch harness contains blunt-cut wires which are tagged with circuit numbers. The numbered tags are listed in the UPFIT WIRING HARNESS CIRCUIT IDENTIFICATION list provided in this Specification Guide.
WIRING DIAGRAMS	See Wiring Section for description.
WIRING PROVISION FOR EMERGENCY LIGHTING	Blunt-cut wire harnesses in front doors and above rear headliner near lift gate for connection to customer outside mirror and rear window emergency lamps.

1. Safety or driver assistance features are no substitute for the driver's responsibility to operate the vehicle in a safe manner. The driver should remain attentive to traffic surroundings and road conditions at all times. Visibility, weather, and road conditions may affect feature performance. Read the vehicle's owner's manual for more important feature limitations and information.
2. Front recovery hooks are for vehicle recovery only. To avoid the risk of injury, never use recovery hooks to tow a vehicle. Never pull on recovery hooks from the side. The hooks could break and you and others could be injured. When using recovery hooks, always pull the vehicle from the front. Required on all models going to Alaska, Guam, Hawaii, Puerto Rico and Virgin Islands.

STANDARD 9C1 MECHANICAL FEATURES

ACTIVE HILL HOLD ASSIST	This feature is designed to prevent the vehicle from rolling, either forward or rearward, during vehicle drive off.
AIR FILTER	High-capacity.
ALTERNATOR	250 amps.
AXLE	3.23 Ratio.
BATTERIES	Primary 900 cca, 95 amp-hour rating with battery rundown protection (may be configured to protect customer installed equip ment packaged behind left rear cargo area panel). Isolated, Auxiliary 760 cca, 70 amp-hour battery without battery run-down protection for customer installed equipment. (see SPECIFICATIONS PAGE for details).
BRAKES	Police specific brakes with anti-lock calibration and electro-hydraulic brake system utilizing 6-piston fixed front Brembo calipers on 410mm rotors (32mm thick), 1-piston sliding rear calipers on 345mm rotors (20mm thick).
COOLING SYSTEM EXTRA CAPACITY	Heavy-duty high -capacity radiator, electric fans and extended life coolant; coolant hoses are EPDM (ethylenepropylenediene-monomer) rubber; silicone hoses are not required (coolant is DEX-COOL good for 5 years/150,000 miles, protects from -34°F to +265° F and against rust and corrosion).
ENGINE	5.3L V8 VVT (variable valve timing), Direct high-pressure fuel injection with Dynamic Fuel Management (DFM) that allows engine to operate in 17 different cylinder patterns (as few as two cylinders) to optimize power delivery and efficiency. The DFM controller calculates 80 times per second to determine how many cylinders are required to meet the driver's requested torque. (see power-train page for description and emissions, see also specifications page).
ENGINE OIL COOLER	Engine Oil is cooled by passing the fluid through a cooler located in the engine radiator assembly end tank. Engine oil is pumped by the engine oil pump from the driver side of the engine block through piping to an oil-to-coolant heat exchanger located within the passenger side end-tank of the coolant radiator and returned to engine.
EXHAUST	Single system, single-outlet.
FRAME	All new fully boxed steel frame with high strength steel roll formed, hydro-formed and stamped rails, design optimized for safety and crash worthiness, durability and stiffness.
FILTRATION MONITOR	Engine air filtration monitor.
FUEL TANK CAPACITY	24 gallons (90.8 liters).
JACK	Mechanical jack with tools.
PROP SHAFT	4 inch diameter aluminum.
RADIO SUPPRESSION	The Tahoe vehicle systems are designed to prevent unwanted emissions and to minimize susceptibility and maximize immunity to external emissions (Electromagnetic (EMI) or Radio Frequency (RFI) Interference). Most emergency vehicle communications equipment operating at frequencies in the VHF Band (30-300 MHz) and up to frequencies in the UHF Band (300 MHz-3GHz) will function as intended without enhanced noise suppression. If additional noise suppression grounding is desired, see the Optional Equipment listing for UN9, Radio Suppression Ground Straps.
REAR DIFFERENTIAL	Performance-optimized heavy-duty clutch-type limited slip.
SKID PLATES, FRONT	Two-piece, heavy-duty aluminum front underbody shield that starts behind the front bumper and attaches to the front fascia. It protects front underbody components and oil pan.
SPARK PLUGS	Extended life - iridium tip.
STABILITRAK	Stability control system with brake assist, includes traction control. See STABILITRAK section (page 23).
STEERING	The Electric Power Steering System consists of a Rack-and-Pinion steering gear assisted by an electronically controlled power steering motor and drive assembly. The steering gear is mechanically connected to the steering wheel system.
SUSPENSION	Heavy-duty police-rated suspension. Full independent suspension with mono-tube dampers, linear coil springs, 35mm solid front stabilizer bar and 32mm hollow rear stabilizer bar. PPV trim height is 20mm lower than civilian model.
TRAILERING EQUIPMENT[2]	SAE Class IV hitch with 2" (51 mm) square receiver. Trailer may weigh up to 7,700 pounds with proper hitch selection. 7-wire harness with independent fused trailer circuits mated to a 7-way connector. See Owners Manual for additional information.
TRANSFER CASE	4WD Only. Active, single-speed, electronic Autotrac, does not include neutral. Cannot be dinghy towed.
TRANSMISSION	The 10-speed automatic provides gear ratios that work to improve both fuel economy and acceleration, while also enabling quicker-smoother shifts. Intelligent electronics provide protection against over-revving the engine and can recognize driver intent, whereby holding gears longer when being driven aggressively. This enhances vehicle control while driving through corners and when throttling up at corner exit. Keeping the transmission in one gear instead of up-shifting and downshifting avoids "hunting" for a gear state.
TRANSMISSION OIL COOLER	Transmission oil is pumped from the transmission through piping to an oil-to-air heat exchanger and then returns to the transmission. The transmission oil cooler is located in front of the air conditioning condenser as part of the Condenser, Radiator, and Fan Module (CRFM) assembly.

1. See PURSUIT MODE description in STANDARD MECHANICAL FEATURES Section.. Read the vehicle's owner's manual for more important feature limitations and information on STABILITRAK.
2. Before you buy a vehicle or use it for trailering, carefully review the Trailering section of the Owner's Manual. The weight of passengers, cargo and options or accessories may reduce the amount you can tow.

OPTIONAL INTERIOR FEATURES

B30	**CARPET FLOOR COVERING -** Color-keyed carpeting. Horizontal surface of cargo area will be covered in vinyl. Center Seat Delete (5Y1) is not available with (B30) carpeting.
S1O	**CONSOLE MOUNTED SAFE -** Dealer Installed. Requires (A50) Front Bucket Seats.
6N6	**DOOR LOCKS AND HANDLES -** Inside rear doors inoperative (doors can only be opened from outside).
AU7	**FLEET COMMON KEY -** Included and only available with SE0 (6E2) Fleet Calibration or SE0 (6E8) Fleet Calibration.
B58	**FLOOR MATS -** Color-keyed carpeted first and second row, removable. Requires and only available with (B30) color-keyed carpeting floor covering.
5Y1	**FRONT CENTER SEAT (20% SEAT) DELETE -** Power driver and passenger bucket seats in base cloth trim. Derived from RPO (AZ3) 40/20/40 split bench seat with the 20% section removed, which also removes the auxiliary power outlet. Does not include a floor console. Two, type-A and C, USB charge and data ports (UBD) and 2, 120-volt, 3.33-amp, 400-watts, power outlets (KI4) are bundled and shipped loose when ordered for upfitter installation. All exposed floor area will remain untrimmed. Requires (BG9) Black rubberized vinyl floor covering. Not available with or (B30) color-keyed carpeting floor covering.
6E2	**KEYS/REMOTE KEYS -** Fleet Calibration, provides a single key with a specific code that is common to the door locks of all the vehicles in the vehicle fleet. key code is an alternate to SEO (6E8) Fleet Calibration. Includes (AU7) fleet common key. NOTE: NOT COMPATIBLE with 2020 model year or older vehicles equipped with this feature. Not available with SEO (6E8) complete vehicle fleet common key.
6E8	**KEYS/REMOTE KEYS -** Fleet Calibration, provides a single key with a specific code that is common to the door locks of all the vehicles in the vehicle fleet. Key code is an alternate to SEO (6E2) Fleet Calibration. Includes (AU7) fleet common key. NOTE: NOT COMPATIBLE with 2020 model year or older vehicles equipped with this feature. Not available with SEO (6E2) complete vehicle fleet common key.
T53	**LAMPS -** Alternate flashing Red and Blue rear compartment lift-gate warning lamps (visible when lift-gate is open) and controlled by lift-gate mounted switch or ground wire in upfitter harness connected to customer switching.
6C7	**LIGHTING -** Red and white LED front auxiliary dome is located on headliner between front row seats. The auxiliary lamp is wired independently from standard dome lamp.
UDA	**ONSTAR DEACTIVATED -** 4WD only. Deletes OnStar and Wi-Fi Hotspot capability. Requires (PQA) Safety and Driver Assistance Package and (A50) front bucket seats. Deletes (UE1) OnStar, (U5G) 5G Wi-Fi Hotspot capable and (VV4) Wi-Fi Hotspot capable. Does not delete Bluetooth. Will delete OnStar standard equipment and services (OnStar Basics / Connected Access / EV Access / R9M Services).
R9L	**REMOVES ONSTAR BASICS -** (OnStar Fleet Basics for Fleet). Only available on vehicles being shipped to Puerto Rico, the Virgin Islands, or Guam. Will delete OnStar standard equipment and services (OnStar Basics / Connected Access / EV Access / R9M Services).
6N6	**REAR DOOR LOCKS AND HANDLES INOPERATIVE -** Rear power locks are inoperable at rear door but operate from drivers position, rear doors can be opened only from outside the vehicle. Includes (VPV) Kerr Industries Ship-thru to mechanically remove hardware linkage.
6N5	**REAR DOOR WINDOW SWITCHES INOPERATIVE -** Calibration for rear windows to operate from drivers position only. Window lockout switch remains illuminated in all positions when equipped with this feature.
PQA	**SAFETY AND DRIVER ASSISTANCE PACKAGE [1] -** Includes (UEU) Forward Collision Alert, (UKM) Enhanced Lane Keep Assist with Lane Departure Warning, (UKI) Blind Zone Steering Assist, (UHY) Automatic Emergency Braking, (UFB) Rear Cross Traffic Braking, (UKT) Front Pedestrian and Bicyclist Braking, (CTB) Intersection Automatic Emergency Braking, (UOW) Side Bicyclist Alert, (DRZ) Rear Camera Mirror and (TQ5) IntelliBeam headlamps.
A50	**SEATS -** 4WD only. Requires (PQA) 1FL Safety Package and (UDA) OnStar deactivated. Includes (D07) front bucket seats (see front seats and interior trim illustration page for description).
5T5	**SEATS -** Front cloth with vinyl rear seat. On 4WD model, not available with (A50) front bucket seats. (see front seats illustration page for description).
UTQ	**THEFT DETERRENT SYSTEM -** Content, disable, the alarm and horn become nonfunctional in an attempted theft of the vehicle.

OPTIONAL EXTERIOR FEATURES

5T4	**EXTERIOR BODY COLORED PARTS[1] -** Special paint WA 9260 , Victory Red painted parts will be front fascia, rear fascia, tailgate applique, liftgate handle and door handles. Black parts will be D-pillar applique, rear spoiler, mirrors, ultrasonic park assist sensors and OnStar antenna.
9V2	**EXTERIOR BODY COLORED PARTS[1] -** Special paint WA 5665 , MSP blue painted parts will be high approach front fascia, rear fascia and tailgate applique Black parts will be liftgate handle, door handles, D-pillar applique, rear spoiler, mirrors, ultrasonic park assist sensors and OnStar antenna.
9W3	**EXTERIOR BODY COLORED PARTS[1] -** Special paint WA 253A, Wheatland Yellow. Black parts will be front fascia, rear fascia, tailgate applique, liftgate handle, door handles, D-pillar applique, rear spoiler mirrors, ultrasonic park assist sensors and OnStar antenna.
9W5	**EXTERIOR BODY COLORED PARTS[1] -** Special paint WA 636R, Silver Ice Metallic painted parts will be high approach front fascia, rear fascia, and tailgate applique. Black parts will be D-pillar applique, rear spoiler, mirrors, ultrasonic park assist sensors and OnStar antenna.
9V7	**EXTERIOR BODY COLORED PARTS[1] -** Special paint WA 722J , Dark Blue Metallic painted parts will be high approach front fascia, rear fascia and tailgate applique. Black parts will be liftgate handle, door handles, D-pillar applique, rear spoiler, mirrors, ultrasonic park assist sensors and OnStar antenna.
9V5	**EXTERIOR BODY COLORED PARTS[1] -** Special paint WA 9015, Woodland Green. Black parts will be front fascia, rear fascia, tailgate applique, liftgate handle, door handles, D-pillar applique, rear spoiler mirrors, ultrasonic park assist sensors and OnStar antenna.

1. Safety or driver assistance features are no substitute for the driver's responsibility to operate the vehicle in a safe manner. The driver should remain attentive to traffic, surroundings and road conditions at all times. Visibility, weather and road conditions may affect feature performance. Read the vehicle's owner's manual for more important feature limitations and information.
2. All Special Paint orders require SEO (TGK) special paint solid.

OPTIONAL EXTERIOR FEATURES (CONTINUED)

AKP	**GLASS -** Solar absorbing, non tinted.
9G8	**HEADLAMPS, DELETE DAYTIME RUNNING LIGHTS AND AUTOMATIC HEADLAMPS -** Deletes standard Daytime Running Lamps and automatic headlamp control features.
VK3	**LICENSE PLATE -** Front mounting package (included on orders with ship-to states that require front license plate).
6JG	**LAMP PACKAGE, RED/BLUE -** Red Left/Blue Right Whelen LED Lamp Package, four ION™ light heads mounted in front grille and integrated Outer Edge Rear Pillar with six ION™ light heads. Original exterior D-pillar trim shipped loose for vehicle decommissioning. Not available with (6J8), (6J9) or (6JE).
6J9	**LAMP PACKAGE, RED -** Red Left/Red Right Whelen LED Lamp Package, four ION™ light heads mounted in front grille and integrated Outer Edge Rear Pillar with six ION™ light heads. Original exterior D-pillar trim shipped loose for vehicle decommissioning. Not available with (6J8), (6JE) or (6JG).
6JE	**LAMP PACKAGE, BLUE -** Blue Left/Blue Right Whelen LED Lamp Package, four ION™ light heads mounted in front grille and integrated Outer Edge Rear Pillar with six ION™ light heads. Original exterior D-pillar trim shipped loose for vehicle decommissioning. Not available with (6J8), (6J9) or (6JG).
6J8	**LAMP PACKAGE, WHITE -** White Left/White Right Whelen LED Lamp Package, four ION™ light heads mounted in front grille and integrated Outer Edge Rear Pillar with six ION™ light heads. Original exterior D-pillar trim shipped loose for vehicle decommissioning. Not available with (6J9), (6JE) or 6JG).
TGK	**SPECIAL PAINT SOLID -** One color. Required with any special paint selection. Refer to individual special paint SEO codes for details on body colored non-sheet metal parts. May require extended lead time.
VQK	**SPLASH GUARDS -** Molded. Dealer-installed.
7X3	**SPOTLAMP[1] -** Left hand, pillar-mounted unity, 6-inch with LED lamps; independently fused.
7X2	**SPOTLAMPS[1] -** Left and right hand, pillar-mounted unity, 6-inch with LED lamps; independently fused.
NZV	**WHEELS -** 20" x 9" (50.8 cm x 22.9 cm) machined aluminum with charcoal pockets. Includes (XCS) 275/55R20SL all-season, blackwall, Firestone Firehawk Pursuit tires.

OPTIONAL ELECTRICAL FEATURES

5J1	**CALIBRATION -** Keyless remote panic button and exterior lights/horn disable.
BCN	**RETAIL LOCKING CALIBRATION -** Allows functionality of lock/unlock of front passenger side door and liftgate (disabled in standard PPV/SSV). Also allows the second row interior power lock/unlock door switches to function normally. 4WD model requires (WX7) auxiliary speaker wiring and is not available with (A50) bucket seats.
WX7	**WIRING -** Auxiliary speaker. For upfitter connection to front door and windshield pillar speakers.
6J3	**WIRING -** For grille lamps and siren speaker.
6J4	**WIRING -** Horn Transfer Loop wire permits customer connection of a switch to operate the vehicle horn or a customer-provided siren system via the steering wheel horn button.

OPTIONAL MECHANICAL FEATURES

K05	**HEATER -** Engine block (dealer installed) late availability.
UN9	**RADIO SUPPRESSION -** Additional ground straps to be installed by the customer or upfitter.

OPTIONAL SHIP THRU

VPV	**SHIP THRU TO KERR INDUSTRIES[1] -** Included with SEO (6J8) White Left/White Right Whelen LED Lamp Package, SEO (6J9) Red Left/Red Right Whelen LED Lamp Package, SEO (6JE) Blue Left/Blue Right Whelen LED Lamp Package, SEO (6J9) Red Left/Blue Right Whelen LED Lamp Package, SEO (6C7) red and white front auxiliary dome lighting, SEO (6N6) door locks and handles, SEO (7X2) left- and right-hand spot lamps, SEO (7X3) left-hand spotlamp, (T53) alternate flashing Red & Blue rear compartment lid warning lamps, SEO (UN9) Radio Suppression Package, SEO (6J3) grille lamps and siren speakers wiring, SEO (6J4) horn and siren circuit wiring and SEO (WX7) auxiliary speaker wiring.
TDD	**SHIP THRU, PRODUCED IN ARLINGTON ASSEMBLY AND SHIPPED TO CAP FLEET UPFITTERS, TEMPLE, TX FOR SHIPPING TO FINAL DESTINATION[1] -** Not available with SEO (6C7) red and white front auxiliary dome lighting, SEO (6N6) door locks and handles, SEO (7X2) left- and right-hand spot lamps, SEO (7X3) left-hand spotlamp, SEO (T53) alternate flashing Red & Blue rear compartment lid warning lamps, SEO (UN9) Radio Suppression Package, SEO (6J3) grille lamps and siren speakers wiring, SEO (6J4) horn and siren circuit wiring and SEO (WX7) auxiliary speaker wiring.
TSB	**SHIP THRU, PRODUCED IN ARLINGTON ASSEMBLY AND SHIPPED DEFENDER SUPPLY CO., ARGYLE, TX FOR SHIPPING TO FINAL DESTINATION[1] -** Not available with SEO (6C7) red and white front auxiliary dome lighting, SEO (6N6) door locks and handles, SEO (7X2) left- and right-hand spot lamps, SEO (7X3) left-hand spotlamp, SEO (T53) alternate flashing Red & Blue rear compartment lid warning lamps, SEO (UN9) Radio Suppression Package, SEO (6J3) grille lamps and siren speakers wiring, SEO (6J4) horn and siren circuit wiring and SEO (WX7) auxiliary speaker wiring.
VDH	**SHIP THRU, PRODUCED IN ARLINGTON ASSEMBLY AND SHIPPED AUTO TRUCK, FT. WORTH, TX FOR UPFIT AND SHIPPING TO FINAL DESTINATION[1] -** Not available with SEO (6C7) red and white front auxiliary dome lighting, SEO (6N6) door locks and handles, SEO (7X2) left- and right-hand spot lamps, SEO (7X3) left-hand spotlamp, SEO (T53) alternate flashing Red & Blue rear compartment lid warning lamps, SEO (UN9) Radio Suppression Package, SEO (6J3) grille lamps and siren speakers wiring, SEO (6J4) horn and siren circuit wiring and SEO (WX7) auxiliary speaker wiring.

1. Factory installation of spot lamps are recommended. Special tooling is used to locate and drill the spotlamp shaft hole in the pillars. (Interior trim covers provided with factory installed lamps are not available as service parts). Field installation of spot lamps must not interfere with proper deployment of the roof rail mounted head-curtain airbags in the event of a crash.

OPTIONAL SAFETY AND DRIVER ASSISTANCE FEATURES

AUTOMATIC EMERGENCY BRAKING	At speeds between 5 and 50 mph, Automatic Emergency Braking can help you avoid or reduce the severity of a collision with a de--tected vehicle you're following. Camera technology is used to automatically provide hard emergency braking or enhance the driver's hard braking. Ref. RPO (UHY)
BLIND ZONE STEERING ASSIST	Can alert you and provide a brief, firm turn of the steering wheel when a potential crash is detected with a moving vehicle in the lane you're entering. Ref. RPO (UKI)
FORWARD COLLISION ALERT	Can warn you if it detects a potential collision with a detected vehicle you're following so you can take action. It can also provide a tailgating alert if you're following a vehicle much too closely. Ref. RPO (UEU).
FRONT PEDESTRIAN AND BICYCLIST BRAKING	At speeds between 5 and 50 mph, Front Pedestrian and Bicyclist Braking can help you avoid or reduce the severity of a collision with a pedestrian or bicyclist it detects directly in front of you. It provides alerts and can automatically provide hard emergency braking or enhance the driver's hard braking. It has limited nighttime and low visibility performance. Ref. RPO (UKT).
INTELLIBEAM	At speeds above 25 mph, IntelliBeam can automatically turn the vehicle's high beams on and off according to surrounding traffic conditions. Ref. RPO (TQ5)
INTERSECTION AUTOMATIC EMERGENCY BRAKING	Can help you avoid or reduce the severity of an intersection collision with a detected cross-traffic vehicle. It provides alerts and can even automatically provide hard emergency braking or enhance the driver's hard braking. Ref. RPO (CTB)
LANE KEEP ASSIST WITH LANE DEPARTURE WARNING	Uses a brief steering wheel turn to prevent a potential lane departure when it detects you are unintentionally drifting out of your lane lines. If needed, you may receive additional Lane Departure Warning Alerts. System alerts do not occur if you're using your turn signal, or it detects you may be intentionally leaving your lane. Ref. RPO (UKM)
REAR CAMERA MIRROR	Uses a camera to provide you the option of using a wide and less obstructed view behind your vehicle while driving instead of a traditional rear-view mirror. The feature also allows brightness, vertical tilt and zoom adjustments. Ref. RPO (DRZ)
REAR CROSS TRAFFIC BRAKING	When you're in REVERSE, alerts you and automatically provides hard emergency braking to help prevent a collision with detected vehicles crossing behind you. Ref. RPO (UFB)
SIDE BICYCLIST ALERT	Alerts you to a detected bicyclist that is approaching a side blind zone. Also, during a brief time after parking, the feature can alert you when a detected bicyclist is approaching so you don't open your door. Ref. RPO (UOW)

Safety or driver assistance features are no substitute for the driver's responsibility to operate the vehicle in a safe manner. The driver should remain attentive to traffic, surroundings and road conditions at all times. Visibility, weather, and road conditions may affect feature performance. Read the vehicle's owner's manual for more important feature limitations and information.

POWERTRAIN

ENGINE				TRANSMISSION		AXLE	
OPTION CODE	TYPE	DISPLACEMENT SYSTEM	FUEL CODE	OPTION CODE	TYPE	OPTION	RATIO
L84	V8	5.3/325	VVT, DI, Dynamic Fuel Management	MHU	10L80 10-Speed auto. with OD	GU5	3.23

EMISSIONS - MUST BE SPECIFIED

FE9	**Emissions -** Federal requirements.
YF5	**Emissions -** California state requirements.
NE1	**Emissions -** State-Specific requirements. Required for vehicles registered in Colorado, Connecticut, Delaware, Maine, Maryland, Massachusetts, Minnesota, Nevada, New Jersey, New Mexico, New York, Oregon, Pennsylvania, Rhode Island, Vermont and Washington State.
NB8	**Emissions override -** California. Required when (FE9) emissions are ordered for delivery to a dealer located in California, Colorado, Connecticut, Delaware, Maine, Maryland, Massachusetts, Minnesota, Nevada, New Jersey, New Mexico, New York, Oregon, Pennsylvania, Rhode Island Vermont and Washington State - to order Federal emissions for a vehicle that will be registered in a state that has Federal emission requirements) and the purchaser will register the vehicle outside those states. Do not use for vehicles that will be registered in any of the states listed above. Requires (FE9) Federal emissions requirements.
NB9	**Emissions override -** State-Specific. Required when (YF5) emissions are ordered for delivery to a dealer located in Colorado, Connecticut, Delaware, Maine, Maryland, Massachusetts, Minnesota, Nevada, New Jersey, New Mexico, New York, Oregon, Pennsylvania, Rhode Island, Vermont or Washington State. Also required when (NE1) emissions are ordered for delivery to a dealer located in California. Requires (YF5) California state emissions requirements or (NE1) state-specific emissions requirements.
NC7	**Emissions override -** Federal. Required when (YF5) or (NE1) emissions are ordered for delivery to a dealer located outside California, Colorado, Connecticut, Delaware, Maine, Maryland, Massachusetts, Minnesota, Nevada, New Jersey, New Mexico, New York, Oregon, Pennsylvania, Rhode Island, Vermont or Washington State and the purchaser will register the vehicle in one of those states. Requires (YF5) California emissions requirements or (NE1-specific emissions requirements.

NOTE: The 2027 Chevrolet Tahoe Police Patrol Vehicle and Special Service Vehicle with the 5.3L Engine (L84) with Emission Option Codes:
FE9 NAME CERTIFICATION EMISSION, FEDERAL
NE1 NAME CERTIFICATION EMISSION, GEOGRAPHICALLY RESTRICTED
YF5 NAME CERTIFICATION EMISSION, CALIFORNIA is certified to EPA Tier 3 BIN 70 standards and qualifies as ULEV 70 (Ultra Low Emission Vehicle) under California Air Resources Board (CARB) requirements, meaning it is 50-state certified.
EPA engine family or test group: MGMXT05.3388

TIRES

MANUFACTURER	QUANTITY	SIZE	SPEED RATING	TYPE
Firestone	5	275/55R20SL	V	All season BW

NOTE:

Due to specific requirements for performance durability and safety, GM recommends only the original equipment tires for replacement.

Tire Plies = Tread 6 ply; 2 Polyester, 2 Steel, 2 Nylon, Sidewall, 2 Polyester

Tire Chains - Proper size Low Profile chains that add no more than 12 mm thickness to the tire tread and inner sidewall are approved for 2027 Tahoe Police Vehicles if the vehicle has 275/55R20 size tires. If traction devices are used, install them on the rear tires only and tighten them as tightly as possible with the ends securely fastened. Drive slowly and follow the chain manufacturer's instructions. If the chains contact the vehicle, stop and retighten them. If contact continues, slow down until it stops. Tire chains used on a vehicle without the proper amount of clearance can cause damage to the brakes, suspension, or other vehicle parts. The area damaged by the tire chains could cause loss of control and a crash. Driving too fast or spinning the wheels with chains on will damage the vehicle. If traction devices are used, install them on the rear tires only. Use tire chains only where legal and only when necessary.

5.3 LITER V8 ENGINE
WITH DYNAMIC FUEL MANAGEMENT



Dynamic Fuel Management allows engine to operate in 17 different cylinder patterns (as few as two cylinders) to optimize power delivery and efficiency. The DFM controller calculates 80 times per second to determine how many cylinders are required to meet the driver's requested torque.

STANDARD HEAVY-DUTY STEEL WHEEL WITH FIRESTONE FIREHAWK PURSUIT TIRE



Firestone Firehawk Pursuit 275/55 R20 all-season, V-rated, blackwall. Includes matching spare tire

SPECIFICATIONS

2-WHEEL DRIVE	
Model	CC10706
Projected top speed[1] (without equipment)	130 mph
Projected top speed in reverse (without equipment)	23 mph
FUEL CAPACITY	
5.3L engine U.S. gallon/liters	24/91
EPA-ESTIMATED MPG FUEL ECONOMY RATING (MPG)	TBD

Note: EPA- ESTIMATED ratings are official, not estimate based on GM testing

VEHICLE WEIGHT (LBS/KG)		
Front Seat Type	40/20/40	40/40
GVWR[3] (Gross Vehicle Weight Rating)	7400/3357	7400/3357
FGAWR (Front Gross Axle Weight Rating)	3700/1678	3700/1678
RGAWR (Rear Gross Axle Weight Rating)	4300/1950	4300/1950
Payload[4]	1780/807	1700/771
Base curb weight	5542/2519	5529/2508
Maximum Trailering Capacity[5]	6000/2722	6000/2722

4-WHEEL DRIVE	
Model	CK10706
Projected top speed[1] (without equipment)	124 mph
Projected top speed in reverse (without equipment)	23 mph
FUEL CAPACITY	
5.3L engine U.S. gallon/liters	24/91
EPA-ESTIMATED MPG FUEL ECONOMY RATING (MPG)	TBD

Note: EPA- ESTIMATED ratings are official, not estimate based on GM testing

VEHICLE WEIGHT (LBS/KG)		
Front Seat Type	40/20/40	40/40
GVWR[3] (Gross Vehicle Weight Rating)	7600/3447	7600/3447
FGAWR (Front Gross Axle Weight Rating)	3700/1678	3700/1678
RGAWR (Rear Gross Axle Weight Rating)	4300/1950	4300/1950
Payload[4]	1610/730	1610/730
Base curb weight	5659/2567	5717/2593
Maximum Trailering Capacity[5]	6000/2722	6000/2722

PASSENGER COMPARTMENT VOLUME INDEX (cu.ft./liters)	
Passenger Volume Front Row	64.1/1814
Passenger Volume Second Row	59.2/1676
Total Passenger Volume	123.2/3489.4

FRONT COMPARTMENT (in./mm)	
Head room (Maximum)	42.3/1074
Shoulder room	65.6/1666
Hip room	61.5/1562
Leg room	44.5/1130

REAR COMPARTMENT (in./mm)	
Head room	38.9/988
Shoulder room	64.6/1641
Hip room	61.3/1557
Leg room	42.0/1067

CARGO	
Load floor length to center of front seat at floor (in./mm)	80.1/2034
Load floor length to center of 2nd seat at floor at seat (in./mm)	58.1/1475
Inside width between wheelhouse (in./mm)	49.5/1257
Cargo area height (in./mm)	36.5/927
Cargo volume[2] maximum behind front seat (cu. ft./liters)	125.9/3565.5
Cargo volume[2] maximum behind second seat (cu. ft./liters)	70.3/1990.9

EXTERIOR (in./mm)	
Wheelbase	120.9/3071
Overall length	211.3/5367
Body width (without Mirrors)	81.0/2057
Overall height[6] 2- Wheel Drive (Maximum)	75.8/1925
Overall height[6] 4- Wheel Drive (Maximum)	75.9/1927
Lift in height[6] (Top of load floor to ground)	34.8/886
Step-in height	22.9/584
Front track width	68.5/1740
Rear track width	68.3/1735
Turning diameter curb to curb (ft./m)	39.5/12.0
Approach angle	31.6 deg
Departure angle	18.1 deg
Breakover angle	16.9 deg
Ground Clearance	7.5/191
Fording depth	20.0/508

1. Adding non?dealer accessories or making modifications to the vehicle can affect vehicle performance, aerodynamics, and overall top speed.
2. Cargo and load capacity limited by weight and distribution.
3. Gross Vehicle Weight Rating (GVWR). When properly equipped, includes vehicle, passengers, cargo and equipment.
4. These maximum payload ratings are intended for comparison purposes only. Before you buy a vehicle or use it to haul people or cargo, carefully review the vehicle loading section of the Owner's Manual and check the carrying capacity of your specific vehicle on the label on the inside of the driver's door jamb.
5. Before you buy a vehicle or use it for trailering, carefully review the Trailering section of the Owner's Manual. The weight of passengers, cargo and options or accessories may reduce the amount you can tow
6. Published dimension indicated is from ground and without optional equipment or accessories. Additional accessories or equipment ordered at the customer's request can result in a minor change in this dimension.

SPECIFICATIONS

ENGINE

Type	V8
Displacement: liters/cu. in.	5.3/325
Horsepower/rpm	355 @ 5600
Torque lb.-ft./rpm	383 @ 4100
Induction system	Direct high-pressure fuel injection with Fuel Management
Compression ratio	11.0:1
Exhaust	Single
Minimum recommended fuel octane	87
Approximate fuel tank capacity (gallons/liters)	24/90.8
Oil with filter (quarts/liters)	8.0/7.6
Cooling capacity (quarts/liters)	15.6/14.78

TRANSMISSION

Automatic electronic with overdrive 10-speed

AXLE

Ratio	3.23

BRAKES

Type	Electro-hydraulic, ABS, Front and Rear Disc
Front-swept area (sq. in./sq. cm)	288.5/1861.2
Rear-swept area (sq. in./sq. cm)	263.7/1701.6
Front rotor diameter (in./mm)	16.1/410
Rear rotor diameter (in./mm)	13.58/345
Front rotor thickness (in./mm)	1.26/32
Rear rotor thickness (in./mm)	0.79/20

TIRES

Type	Firestone Firehawk Pursuit, V-rated, All-season
Size	275/55R20

WHEELS

Type	Black Steel with bolt on aluminum center cap
Size	20"x 9"

CHASSIS

Frame	Full perimeter steel
Suspension	Heavy-duty police-rated suspension with unique StabiliTrak performance calibration. Full independent suspension with mono tube dampers, linear coil springs, 35mm solid front stabilizer bar and 32mm hollow rear stabilizer bar. PPV trim height is 20mm lower than civilian model.
Steering type	Electric power-assisted rack and pinion
Steering ratio	16.0:1

BATTERIES	PRIMARY	AUXILIARY
Type	Maintenance free	Maintenance free
BCI group size	LN5	LN3
Volts	12	12
Amp hour rating	95	70
Reserve capacity	160	120
Cold cranking-amps	900	760

ALTERNATOR

Type		Melco GX9-L25
Amps	77°F (25°C)	250

TAHOE POLICE ALTERNATOR OUTPUT

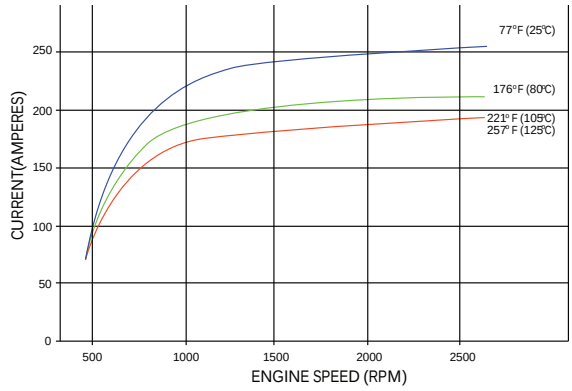

BOOST LEVEL	PARK/NEUTRAL	DRIVE
Normal Idle	550	500
1	800	650
2	800	725
3	1000	800

APPROACH & DEPARTURE DIMENSIONS

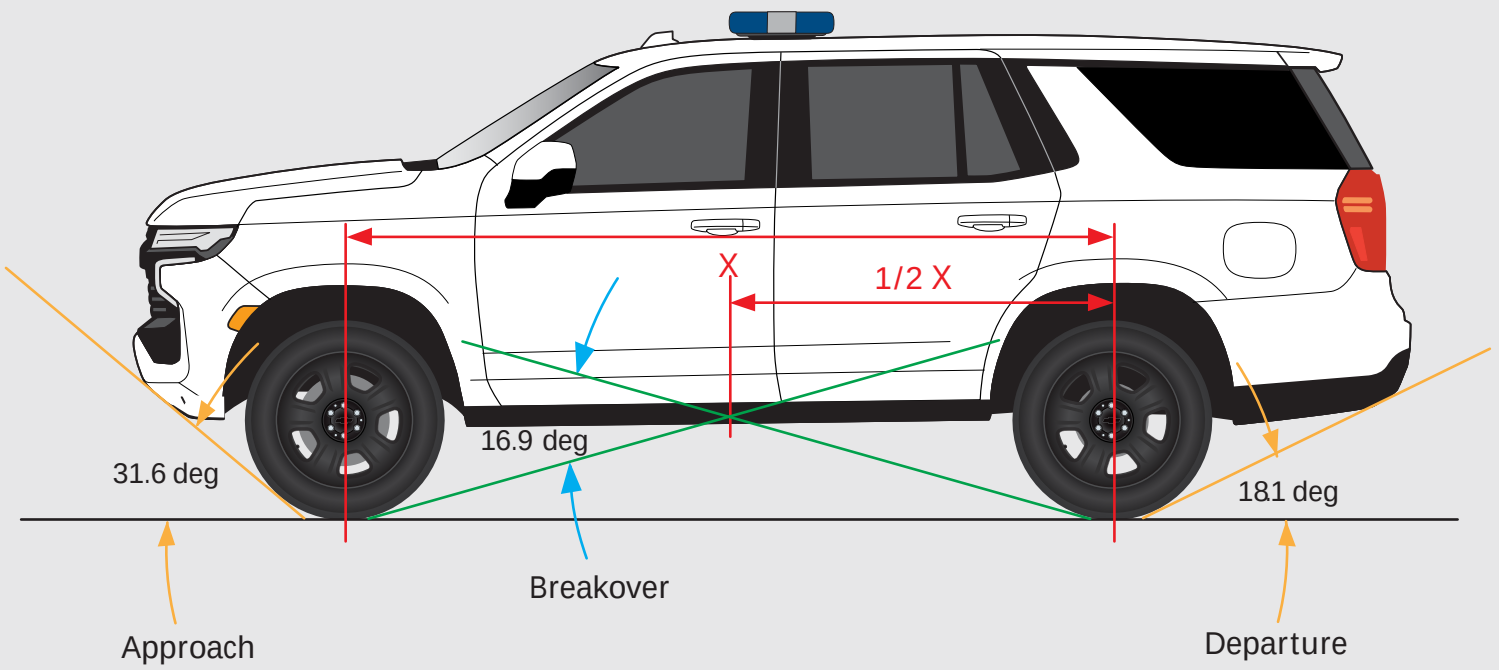

	PPV Tahoe	
	4WD	2WD
Approach Angle	31.6 deg	31.7 deg
Departure Angle	18.1 deg	18.1 deg
Breakover Angle	16.9 deg	16.9 deg
Ground Clearance	191 mm	191 mm
Fording Depth	20.0 in	20.0 in

MATERIAL DIMENSIONS FOR BODY WRAP AND GRAPHICS ESTIMATIONS

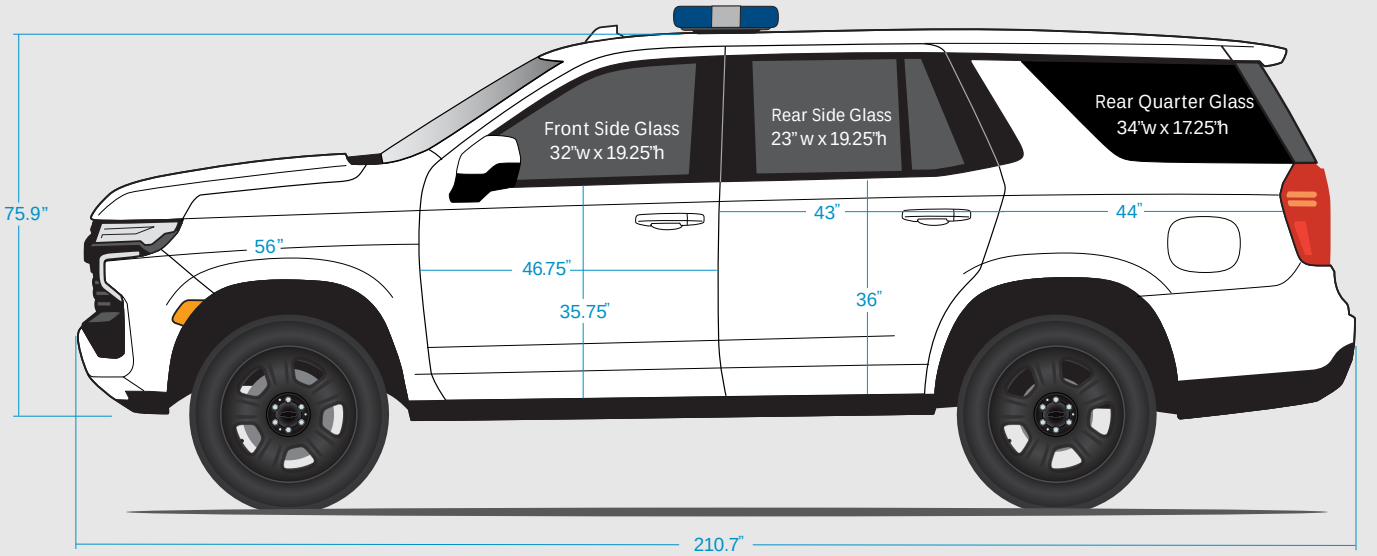

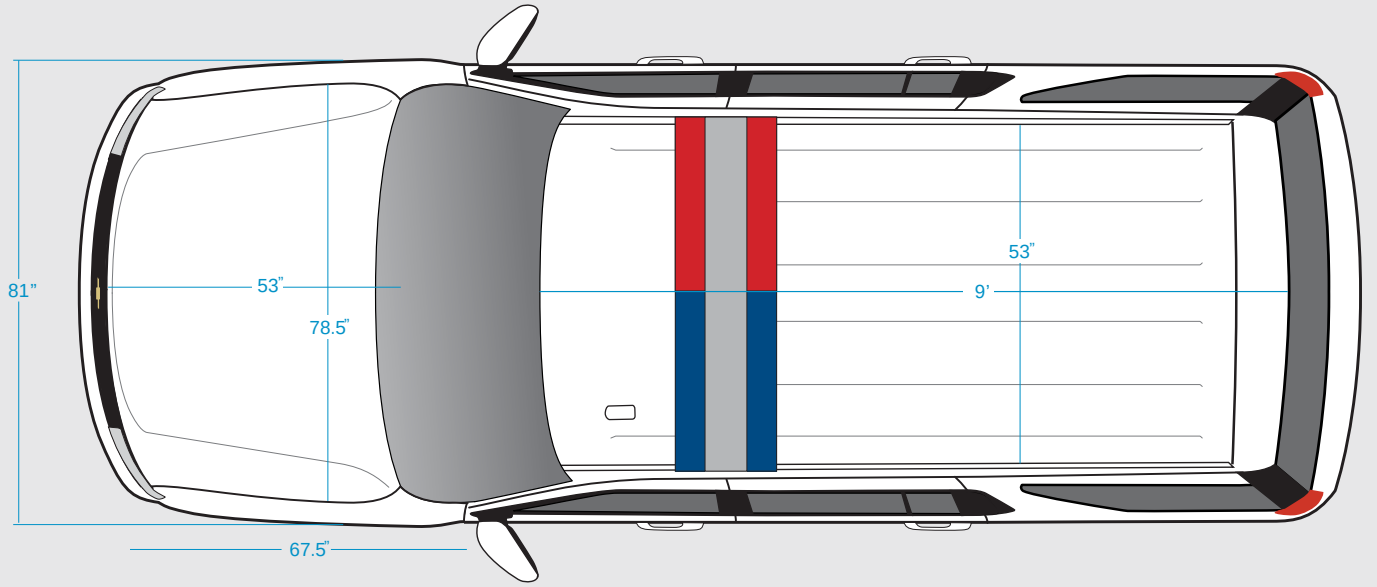

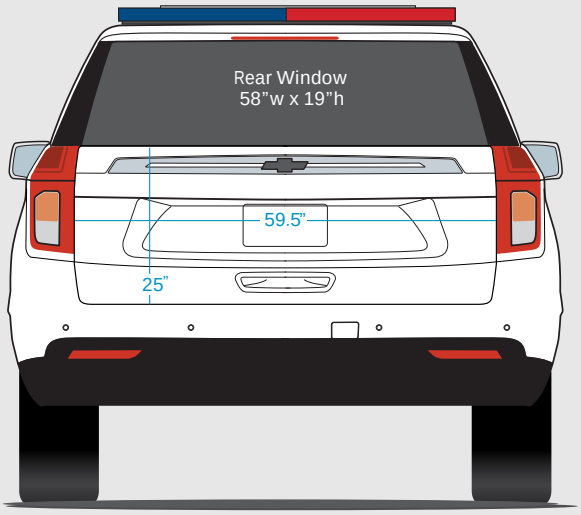

Estimated material sizes to wrap:

- Hood - 79" x 54"
- Front Doors - 48" x 37"
- Rear Doors - 45" x 38"
- Roof - 110" x 55"
- Rear hatch - 63" x 27"

SPEEDOMETER/CLUSTER

(CANADIAN SIMILAR)



DIC MAIN MENU

- INFO
- AUDIO
- PHONE
- NAVIGATION
- OPTIONS

ACTIVE INFO PAGES as listed in DIC main menu item OPTIONS above

- ☑ Speed
- ☑ Engine Idle Hours
- ☑ Fuel Range
- ☑ Oil Life
- ☑ Tire Pressure
- ☑ Air Filter Life
- ☑ Fuel Economy
- ☑ Engine Hour Idle Meter



STEERING WHEEL MENU CONTROLS

2027 TAHOE 9C1 SPEEDOMETER CERTIFICATION CALIBRATION

To Whom It May Concern:
The speedometer system in the 2027 model year Police Tahoe Vehicle is accurate to +/- 2 mph in the temperature range of -23 to 49 °Celsius (-10 to 120 ° Fahrenheit) over the useful life of the vehicle. The speedometer system includes the vehicle integrated speed measurement system and indication of the vehicle speed on the speedometer.
GM specified vehicle maintenance is required to maintain the stated accuracy of the speedometer system. The accuracy of the speedometer system is dependent on and affected by the required vehicle maintenance including; following placard tire inflation pressure of 35 psi, monitoring tire wear as directed by the owner's manual. Tire replacement with 275/55R20 tire size, maintaining original OEM drive-line ratios, maintaining original OEM electronic module calibration files and following vehicle loading limitations.
Regards,

Brad Lutz
Performance Engineering Manager

VEHICLE TOUCH SCREEN SETTINGS



VEHICLE PERSONALIZATION MENU

The Personalization Menu is accessed by:

- Touching the radio screen to display the HOME PAGE
- Touching the SETTINGS icon and then
- Touching VEHICLE to display the features

Select from the available features listed to change the item setting.

Important features in the Menu that can be changed are:

AUDIO SETTINGS

OCCUPANT LEFT BEHIND REMINDER

CLIMATE AND AIR QUALITY

COLLISION/DETECTION SYSTEMS

COMFORT AND CONVENIENCE

LIGHTING

POWER DOOR LOCKS

REMOTE LOCK, UNLOCK AND START > REMOTE KEY PAIRING

See the Owner's Manual for a complete Vehicle Personalization Menu listing of items that may be available for your vehicle.

UNIQUE CLOSURE LOCK/UNLOCK FUNCTION

OUTSIDE OF VEHICLE LOCK/UNLOCK FUNCTION

2nd Row Doors and Liftgate only lock/unlock with remote or interior front door courtesy switches:

- Designed to prevent unwanted entry into 2nd row or rear cargo areas in hostile crowds
- Side doors and liftgate unlocking handles operate separately

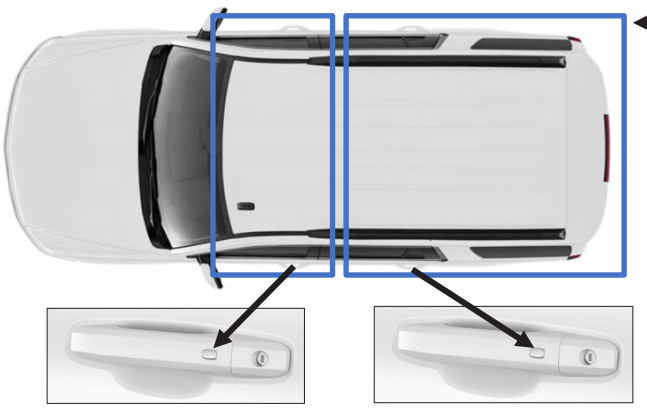

The 2nd row doors and liftgate/glass can only be locked/unlocked with:

1. Remote Lock/Unlock button.



2. Front row interior courtesy switch Lock/Unlock buttons



1st Row Passive Entry button will only unlock the front row doors

2nd Row Passive entry button WILL unlock 2nd Row door if Remote is present.
A double press of either the remote fob Unlock button, or interior courtesy switch Lock/Unlock buttons will unlock all doors, including the liftgate.

INSIDE OF VEHICLE LOCK/UNLOCK FUNCTION

The ETRS (shifter) door locking/unlocking function:

- Shift out of Park locks all doors and liftgate/glass
- Shift into Park unlocks front row doors and rear doors

Customizable in infotainment center however, it will not unlock 2nd row doors or liftgate

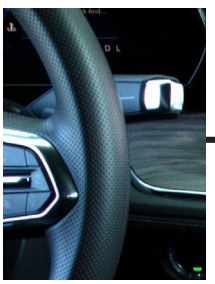

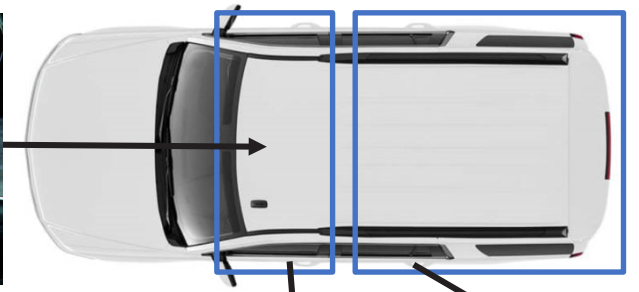



1st Row Doors interior courtesy switch locks/unlocks all the doors and liftgate/glass



2nd Row Door courtesy switches have no function

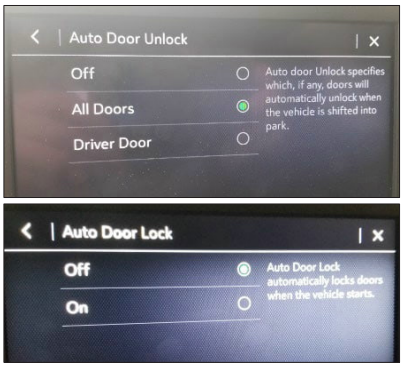

Note: default auto door locking is turned on.

OTHER UNLOCKING COMMANDS

- OnStar unlocking commands unlocks all doors and liftgate/glass
- Collision detection unlocks all doors and liftgate/glass

Note: Option BCN will provide retail Tahoe Lock/Unlock function of exterior and interior closures for customers who don't prefer the above functions. This includes deactivating Option 6N5 (2nd row power window lockout). If 6N6 is present it is recommended that that the interior door handles are reconnected. The lock out protection only detects the Remote Key in the interior front row and not in the 2nd row or cargo areas.

STANDARD SAFETY AND DRIVER ASSISTANCE FEATURES

HD SURROUND VISION [1]



With Bird's Eye View. Includes instant ON hard button, left of steering wheel. Safety or driver assistance features are no substitute for the driver's responsibility to operate the vehicle in a safe manner. Read the vehicle Owner's Manual for important feature limitations and information

REAR PARK ASSIST [1]

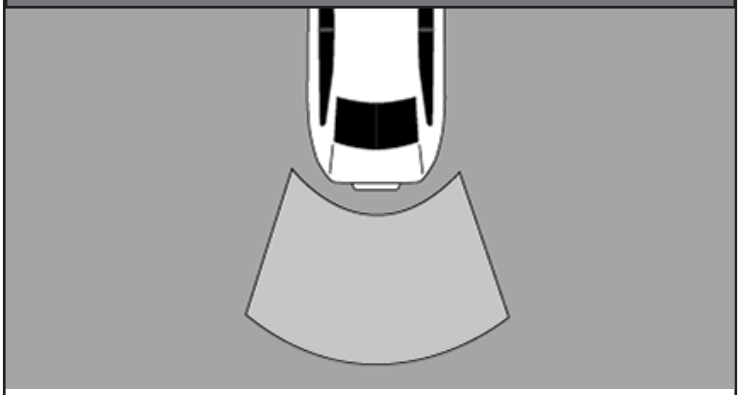

The cluster may display a Park Assist amphitheater-like display with bars that represent the estimated location of a detected object and the vehicle's distance from the object. As a detected object becomes closer, more bars light up and change color from yellow to amber to red. When an object is first detected in the rear, one beep will be heard from the rear, or the SAFETY SEAT will pulse two times, When an object is very close, five beeps will sound from the rear or the SAFETY SEAT will pulse five times.

The Park Assist System is no substitute for careful and attentive driving. The Park Assist system does not detect children, pedestrians, bicyclists, animals, or objects located below the bumper or that are too close or too far from the vehicle. It is not available at speeds greater than 9 km/h (6 mph). To prevent injury, death, or vehicle damage, even with Park Assist, always check the area around the vehicle and check all mirrors before moving forward or backing.

The REAR Park Assist System can be turned on or off using the infotainment system. To view available settings from the infotainment home screen, touch Settings > Vehicle > Collision/Detection Systems.

REAR PEDESTRIAN ALERT [1]

When you're in Reverse, Rear Pedestrian Alert can alert you to detected pedestrians directly behind your vehicle. It has limited night-time and low visibility performance.

HD REAR VISION CAMERA [1]

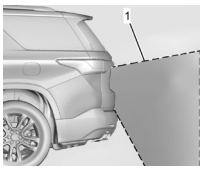

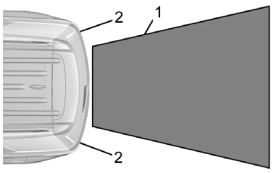

1. View Displayed by the Camera in Radio Screen
2. Corners of the Rear Bumper

Displayed images may be farther or closer than they appear. The area displayed is limited and objects that are close to either corner of the bumper or under the bumper do not display.

The camera(s) do not display children, pedestrians, bicyclists, crossing traffic, animals, or any other object outside of the cameras' field of view, below the bumper, or under the vehicle. Shown distances may be different from actual distances.

Do not drive or park the vehicle using only these camera(s). Always check behind and around the vehicle before driving. Failure to use proper care may result in injury, death, or vehicle damage.

1. Safety or driver assistance features are no substitute for the driver's responsibility to operate the vehicle in a safe manner. The driver should remain attentive to traffic, surroundings and road conditions at all times. Visibility, weather, and road conditions may affect feature performance. Read the vehicle's owner's manual for more important feature limitations and information.

STANDARD FEATURES

SURROUND VISION RECORDER

HOW TO USE THE RECORDINGS APP:
When your vehicle is on and in PARK, press the Recordings icon on the center display. The app will take you to the video player.

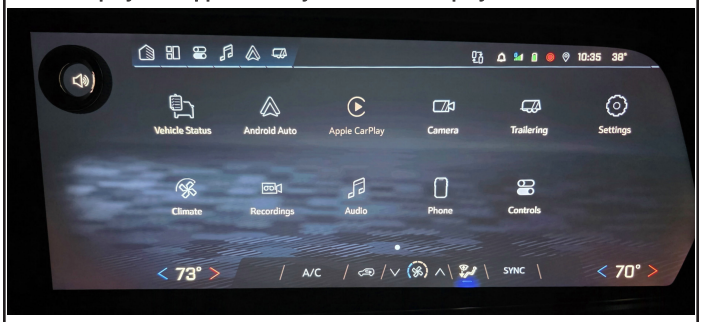

- A list of recent videos
- A list of different camera views (see icons on the right of screen)
- The recordings options menu
- An option to safely eject the USB drive
- Video player lets you play, pause, or scroll to other videos.





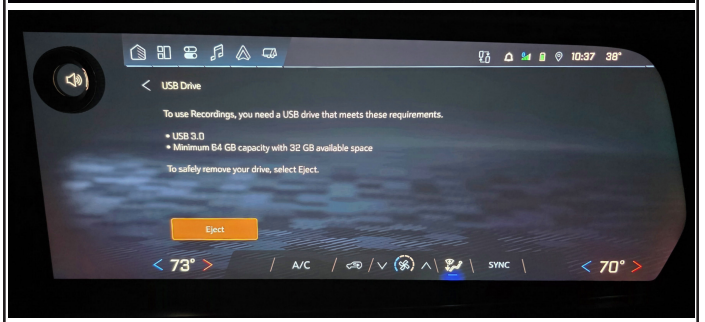

NOTE: THE SYSTEM DOES NOT RECORD AUDIO. This feature requires a customer-provided 64 GB USB 3.0 drive (minimum) with 32 GB of space to operate. Check your Owner 's Manual for the location of this feature 's USB port and any requirements for the USB drive.

OnStar®



Voice Command Button

Blue OnStar® Button

Emergency Button

This vehicle is equipped with a comprehensive, in-vehicle system that can connect to a live OnStar® Advisor for Emergency, Security, Navigation, Connection, and Diagnostic Services. OnStar® services may require a paid subscription. OnStar® requires the vehicle battery and electrical system, cellular service, and GPS satellite signals to be available and operating. OnStar® acts as a link to existing public emergency service providers. OnStar® may collect information about you and your vehicle, including location information. See OnStar's® Terms and Conditions and Privacy Statement for more details including system limitations at www.OnStar.com (U.S.) or www.OnStar.ca (Canada). The OnStar® system status light is next to the OnStar® buttons. If the status light is:

- Solid Green: System is on.
- Flashing Green: On a call.
- Red: Indicates a problem.
- Off: System is off. Press the blue OnStar® button twice to speak with an OnStar® Advisor.

Press or call 1-888-4-ONSTAR (1-888-466-7827) to speak to an Advisor.
Press to:

- Make a call, end a call, or answer an incoming call.
- Give OnStar® Hands-Free Calling voice commands.

NOTE: Do not activate OnStar if you have no plans on using this feature

RECOVERY HOOKS



Two front frame-mounted. Black.
Never pull on recovery hooks from the side. The hooks could break and you and others could be injured. When using recovery hooks, always pull the vehicle from the front. Front recovery hooks are for vehicle recovery only. To avoid the risk of injury, never use recovery hooks to tow a vehicle.
Required on all models going to Alaska, Guam, Hawaii, Puerto Rico and Virgin Islands. All Tahoe 9C1 vehicles include front fascia with recovery hook OPENINGS.

STANDARD MECHANICAL FEATURES

SERVICE PARTS IDENTIFICATION LABEL

SPID Label Content Now Included with Certification Label. The Service Parts Identification (SPID) label, often located in the trunk or glovebox of a vehicle, lists a vehicle's VIN, RPO codes and other information that identify the content of the vehicle. Beginning with the 2018 model year, much of this information will be available through a QR code on the Certification label.

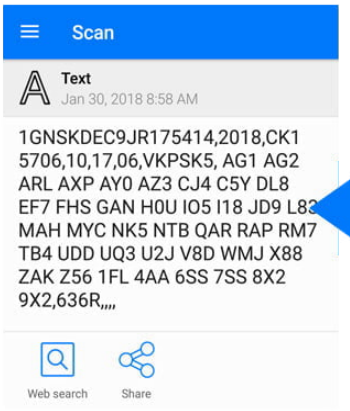



Software to read the QR code is commonly available for any Android, iPhone or Windows smartphone. Many basic applications can be downloaded for free. Tested QR code readers that are easy to use include NeoReader by NM LLC, inigma by 3GVision, QR Scanner by Honestly App, QR Droid by DroidLa and Bar-Code by PW2. GM does not recommend any particular software. Once the QR code is scanned, the vehicle information will appear in the following order: VIN, Model Year, Model, Build Month, Year, Engineering Book, Vehicle Order Number, 3 Digit RPO Codes sorted alphanumerically, and the Paint Code (same code appears in the lower left of the QR code)

STABILITRAK CONTROL

The vehicle has a Traction Control System (TCS) and StabiliTrak/Electronic Stability Control (ESC) system.
These systems help limit wheel slip and assist the driver in maintaining control, especially on slippery road conditions.
TCS activates if it senses that any of the drive wheels are spinning or beginning to lose traction. When this happens, TCS applies the brakes to the spinning wheels and reduces propulsion system power to limit wheel spin.
StabiliTrak/ESC activates when the vehicle senses a difference between the intended path and the direction the vehicle is actually traveling. StabiliTrak/ESC selectively applies braking pressure to any one of the vehicle brakes to assist the driver in keeping the vehicle on the intended path.
If TCS is limiting wheel spin when the accelerator pedal is pressed, the system will not turn off until the wheels stop spinning.
If cruise control is being used and TCS or StabiliTrak/ESC begins to limit wheel spin, cruise control will disengage. Cruise control may be turned back on when road conditions allow.
Both systems come on automatically when the vehicle is started and begins to move. The systems may be heard or felt while they are operating or while performing diagnostic checks. This is normal and does not mean there is a problem with the vehicle.
It is recommended to leave both systems on for normal driving conditions, but it may be necessary to turn TCS off if the vehicle gets stuck in sand, mud, ice, or snow. See "Turning the Systems Off and On" later in the Owners Manual.



PURSUIT MODE

The Pursuit Mode may activate when the vehicle detects continuous high-performance driving. This mode supports extended high demand driving such as law enforcement pursuits. Pursuit Mode modifies steering effort, accelerator and brake pedal tuning, and propulsion control.
Either the Traction Control System (TCS)/Electronic Stability Control (ESC) Light, the Electronic Stability Control (ESC) OFF Light , or both will display in the instrument cluster until Pursuit mode deactivates. The Traction Control System and Stabilitrak/Electronic Stability Control are still functional but operating at a modified level to support high-performance driving. See the "Warning Lights, Gages, and Indicators" section in the Owner's Manual for additional information on these lights.

STANDARD MECHANICAL FEATURES

HEAVY DUTY BRAKES

Police specific brakes with electro-hydraulic brake system including anti-lock calibration and utilizing 6-piston fixed front Brembo calipers on 410mm rotors (32mm thick),
1-piston sliding rear calipers on 345mm rotors (20mm thick).



INDEPENDENT REAR SUSPENSION

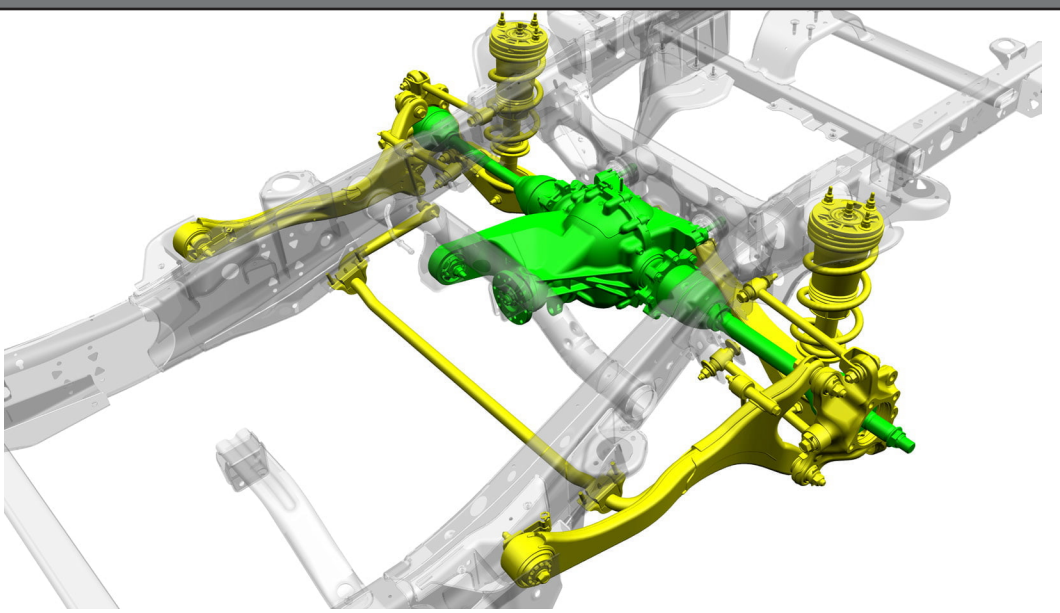

Heavy duty Clutch-type limited-slip differential (green), Fully independent multi-link suspension (yellow) utilizing mono tube dampers, linear coil springs and 32mm hollow stabilizer bar

STANDARD MECHANICAL FEATURES

SERVICE PARTS IDENTIFICATION LABEL

SPID Label Content Now Included with Certification Label. The Service Parts Identification (SPID) label, often located in the trunk or glovebox of a vehicle, lists a vehicle's VIN, RPO codes and other information that identify the content of the vehicle. Beginning with the 2018 model year, much of this information will be available through a QR code on the Certification label.

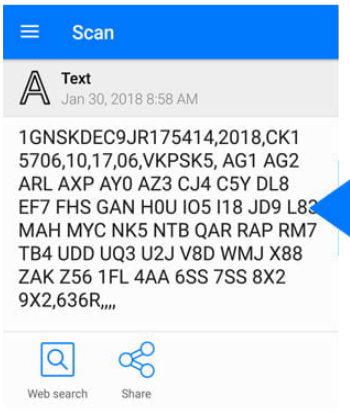



Software to read the QR code is commonly available for any Android, iPhone or Windows smartphone. Many basic applications can be downloaded for free. Tested QR code readers that are easy to use include NeoReader by NM LLC, inigma by 3GVision, QR Scanner by Honestly App, QR Droid by DroidLa and Bar-Code by PW2. GM does not recommend any particular software. Once the QR code is scanned, the vehicle information will appear in the following order: VIN, Model Year, Model, Build Month, Year, Engineering Book, Vehicle Order Number, 3 Digit RPO Codes sorted alphanumerically, and the Paint Code (same code appears in the lower left of the QR code).

ENGINE OIL COOLER



Engine Oil is cooled by passing the fluid through a cooler located in the engine radiator assembly end tank.

Engine oil is pumped by the engine oil pump from the driver side of the engine block through piping to an oil-to-coolant heat exchanger located within the passenger side end-tank of the coolant radiator and returned to engine.

TIRE PRESSURE MONITOR WITH TIRE

The Tahoe Police Package is equipped with Tire Pressure Monitoring System (TPMS) which warns of low tire pressure. Refer to your owner's manual for additional information the Tire Pressure Monitor System Programming. The full size spare includes an unprogrammed sensor. The spare tire pressure will not be monitored until it is programmed with the dealer service tool.

Tire Fill Alert feature is included in addition to the DIC warning when a tire has low pressure. This feature provides audible and visual indication when air is being added to the low tire to aid in achieving optimal tire pressure.

TRANSMISSION OIL COOLER

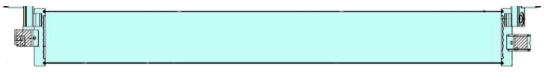

Transmission oil is pumped from the transmission through piping to an oil-to-air heat exchanger and then returns to the transmission. The transmission oil cooler is located in front of the air conditioning condenser as part of the Condenser, Radiator, and Fan Module (CRFM) assembly.

STANDARD MECHANICAL FEATURES

ELECTRIC POWER STEERING SYSTEM

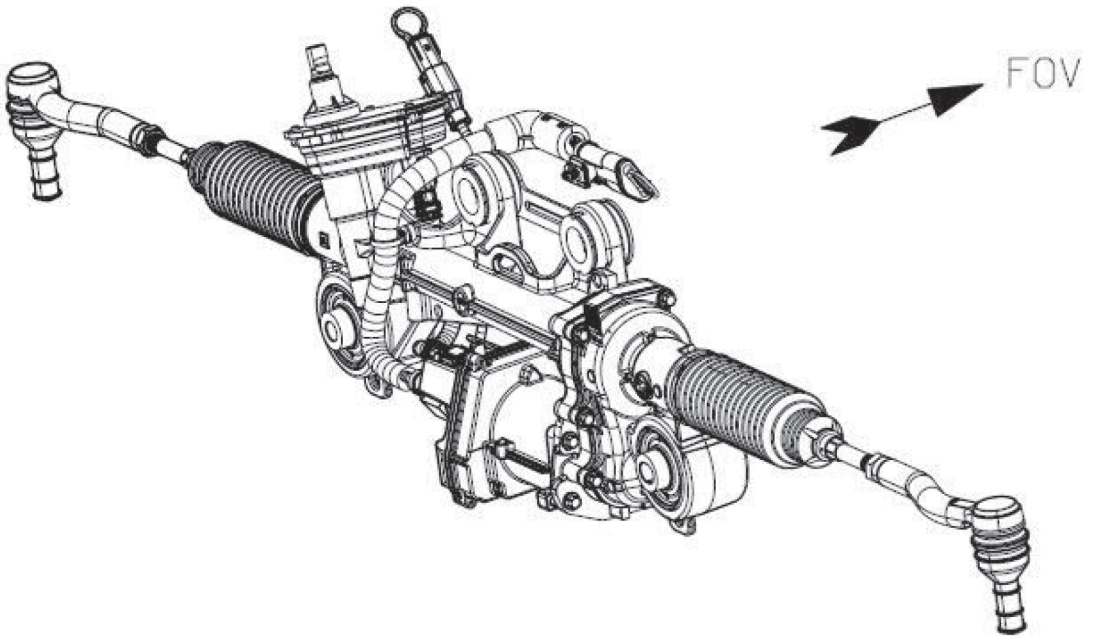

The Electric Power Steering System consists of a Rack-and-Pinion steering gear assisted by an electronically controlled power steering motor and drive assembly. The steering gear is mechanically connected to the steering wheel system.

SKID PLATES

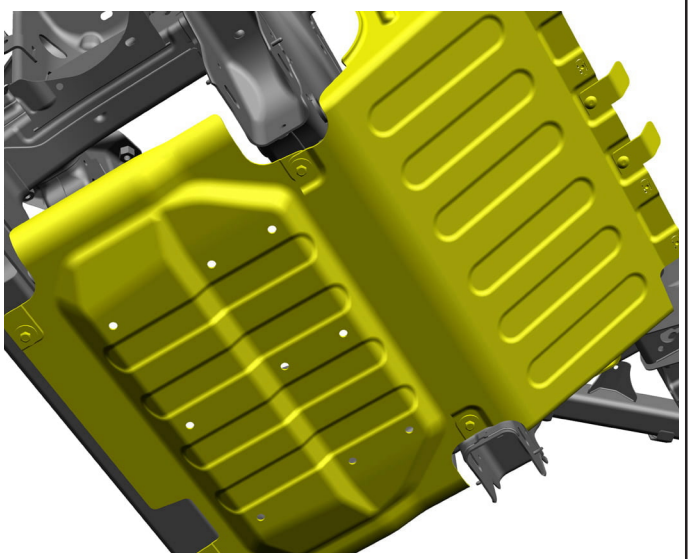

Two-piece, heavy-duty aluminum front underbody shield that starts behind the front bumper and attaches to the front fascia, protects front underbody components and oil pan.

HUB CAP REMOVAL



The hub cap can be removed for installation of the removed road wheel on the tire hoist using the provided socket removal tool PN 84797942 as shown. Install the socket on the three hub cap fasteners and use the jack tools lug wrench to loosen the hub cap attachment fasteners. The hub cap fasteners can be reinstalled on the road wheel and torqued to 30 Nm

STANDARD ENTRY AND IGNITION

KEYLESS ACCESS



The remote key must be within 3 ft (1 m) of the liftgate or door being opened or locked. Press the button on the door handle to open.
2nd Row Doors and Liftgate/glass only lock/unlock with FOB or ft row interior courtesy switch. It's designed to prevent unwanted entry into 2nd row or rear cargo areas in hostile crowds. The side door liftgate/glass locking and unlocking SW handles the opening of these closures separately. The 2nd row exterior door handles PEPS buttons are purposely deactivated. The 2nd row interior power lock/ unlock button is also purposely deactivated.
SEO BCN can be ordered to give the retail PEPS function of the locking/unlocking.

REMOTE KEYLESS ENTRY



The Keyless Access system allows for the vehicle entry when the remote is within 3 ft (1 m)

The mechanical key inside the remote key is used for the driver door, glove box and spare tire access.



To remove the mechanical key press the button on the side of the remote key near the bottom and pull the mechanical key out. Never pull the mechanical key out without pressing the button.

PUSH TO START IGNITION



If REMOTE KEY not detected, from low REMOTE KEY battery, or radio interference, hold key to start button to start

REMOTE KEYLESS ENTRY PACKAGE

AMF allows for up to 8 remote keys to be paired for remote key button functions. The first eight remote keys are given the positions #1-#8 in the RKE. Additional remote keys, starting with #9, will override previously programmed remote keys, starting at #1. For passive functions such as unlocking the vehicle through the door handle or starting the vehicle, unlimited remote keys may be programmed. Verify that the proper remote keys are learned to the vehicle.
With optional 6E2 and/or 6E8 an unlimited number of FOBS can be paired.

NOTE: If previously learned remote keys are not available, the programming of the new remote keys must be performed by a dealer using the Service Programming System (SPS). Remote key programming is not a warranty item and programming is conducted by the customer at a dealer at customer expense.



PROGRAMMING PROCEDURE:

1. With one previously learned remote key in the vehicle, place the remote key to pair above the ignition start button. Start vehicle and keep in PARK.
2. On the infotainment home screen, select;
   Vehicle>Settings>Remote Lock, Unlock, Start>Remote Key Pairing.
3. Follow on-screen instructions.

STANDARD ELECTRICAL FEATURES

PROTECTED IDLE

The Protected Idle Feature allows the vehicle to remain idling but will not allow the transmission to be shifted from Park without a valid key fob.

ACTIVATING PROTECTED IDLE:

Preconditions (All preconditions must be met.)

- Vehicle is in PROPULSION (engine running) state
- Vehicle is in Parked State
- Vehicle speed is less than 4 kilometers per hour
- Valid key fob is present.

Low Fuel light/Charge vehicle soon battery light not present.

ACTIVATION:

Press and Hold the Cruise Cancel Switch for 2 seconds.

NOTE: From SORP for 2026 and available from Aug. 13th 2025 AUTO PROTECTED IDLE can be activated by Pressing Park and removing foot from the brake.

VEHICLE FEEDBACK:

Upon activation of Protected Idle, the Digital Information Center (DIC) will display the following:

"Protected Idle ON"
"Park in Open Area"
"Take Your Key"

If any of the above preconditions are not met while activating Protected Idle, DIC will display the message: "Protected Idle Unavailable"

DEACTIVATING PROTECTED IDLE:

Valid key fob is present

- Press brake pedal and shift out of Park OR
- Press and hold the Cruise Cancel Switch for 2 seconds OR
- Press the Ignition Switch with the Brake Pedal pressed.

DIC messages will turn off, indicating Protected Idle is no longer activated.

CONDITIONS UNDER WHICH THE PROTECTED IDLE WILL TURN OFF AND VEHICLE WILL TRANSITION TO OFF POWER MODE:

- Brake pedal pressed without a valid key fob present OR
- Cruise Cancel Switch depressed without a valid key fob present OR
- Ignition Switch pressed without a valid key fob present OR
- With a valid key fob present, ignition switch is pressed and brake pedal is not pressed (the system treats this action as a customer request to turn OFF the vehicle.) OR
- Engine stalls. Horn chirps occur. OR
- Low fuel/energy condition. Horn chirps occur.

CONDITIONS UNDER WHICH THE PROTECTED IDLE WILL TURN OFF AND VEHICLE WILL TRANSITION TO RUN POWER MODE.

If the Shift Lock mechanism is defeated and shifted Out of Park while the Protected Idle is active, the vehicle will transition to the RUN power mode (the engine will be turned off) and Protected Idle will be deactivated and Horn chirps occur. DIC messages will turn off indicating Protected Idle is inactive.

ALWAYS PROPERLY SUPERVISE A VEHICLE WHEN PEOPLE OR ANIMALS ARE INSIDE WHEN THE ENGINE IS IDLING.

SURVEILLANCE MODE INTERIOR & EXTERIOR LIGHTING

Surveillance Feature (5J3): The Body Control Module (BCM) is calibrated to disable the exterior and interior automatic lighting.

When ground is applied to upfit circuit wire 6821 (see Upfit Wiring Harness Circuit List) in the front upfitter branch harness via a customer-provided switch, automatically controlled lighting is disabled or dimmed to a Federally regulated level.

Interior courtesy lamps, including dome lamps, can be turned OFF with a three-position switch located in the front overhead console.

NOTE: Wiring connection or splice changes are to be removed before the vehicle is returned to civilian use.

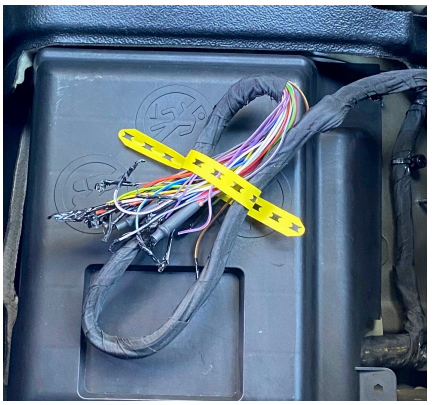

INTERIOR DOME LAMP CONTROL

Interior courtesy lamps, including dome lamps, can be turned OFF with a three-position switch located in the front overhead console.

The interior lamp control positions are: OFF - DOOR - ON

When the switch is in the OFF position, all interior lighting remains off whenever the doors are opened.

WIRING PROVISION FOR OUTSIDE MIRRORS AND CARGO SIDE WINDOWS

Wiring provisions are provided for connection to customer-provided LED emergency lighting to be installed on the outside rear view mirrors and on the rear of the cargo area side windows. Blunt-cut wires are located in the front doors and above the cargo area headliner, forward of the lift gate. The wire circuits are included in the CONSOLE and CARGO Upfitter branch harnesses for connection to customer - installed strobe lights, strobe power and flash controls (circuits 8870-8889).

STANDARD ELECTRICAL FEATURES

OVERHEAD DOME LAMPS



There are dome lamps in the overhead console and the headliner. To change the dome lamp settings, press the following:

- Press and hold any of the overhead console lens to turn all dome lamps on.
- Press and hold any of the overhead consoles lens again to turn all dome lamps off.
- Press OFF to turn off the dome lamps when a door is open. An indicator light on the button will turn on when the dome lamp override is activated.

STEERING WHEEL BUTTONS



The steering wheel has two button switches on the left backside which have been re-purposed for the operation of aftermarket emergency equipment such as lighting or radios[1]. The switches operate emergency equipment via the Body Control Module (BCM). The top button provides a latching ground signal for lights and siren; the bottom button provides a momentary ground signal for a push to talk two-way radio. The following customer device electrical specifications must be met to avoid damage to the BCM input circuitry: BCM can operate a single relay only with a maximum inductive energy of 2 millijoules. Current in Active State: 350 milliamps @ 16 volts. Voltage in Active State: 0.76 volts

ROUTING GROMMETS



Provides pass through for a small number of wires and are located at the left and right sides of the front of dash. Carefully remove or puncture only the nipple portion for the passage of upfitter wires and silicone seal around the wire after installation. Note that a vehicle harness is passing through the grommets and care must be taken to avoid damaging these harnesses especially in the instrument panel interior.

1. GM is not responsible for the safety or quality of design features, materials or workmanship of any alterations by third parties.

STANDARD ELECTRICAL FEATURES

AUXILIARY BATTERY POWER REAR ELECTRICAL



The auxiliary battery negative battery cable is disconnected during shipment. It must be connected by the customer for proper operation of blunt cut battery feed circuits and auxiliary battery charging system

CARGO UPFIT BRANCH

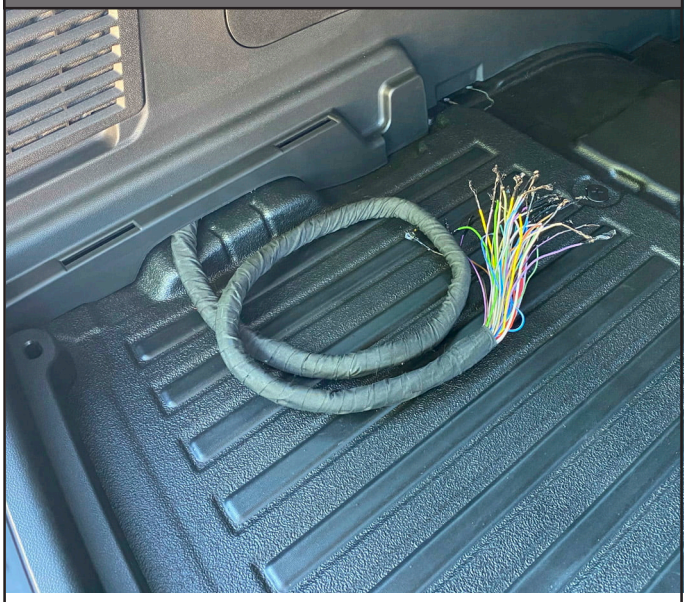

Cargo area branch with circuits for customer connection.

Tagged circuits listed in UPFIT WIRING HARNESS CIRCUIT LIST

FRONT CENTER UPFIT

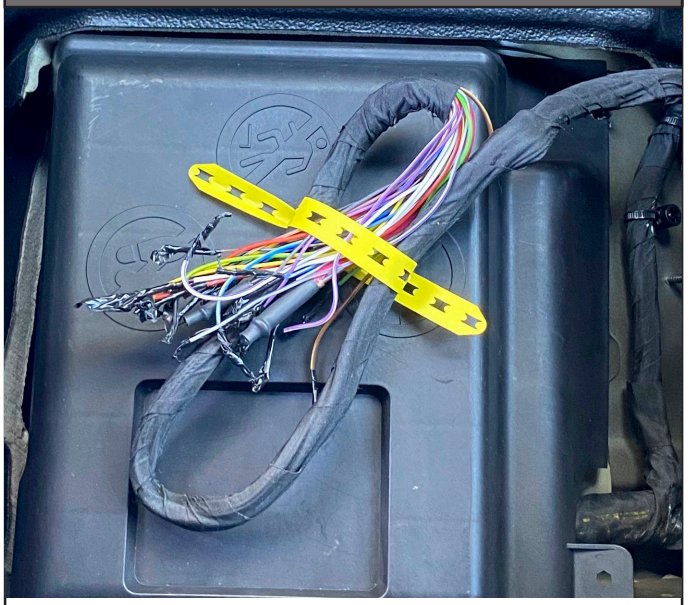

2 type-A and C, charge and data USB ports and 2, 120-volt power outlets are bundled and shipped loose when ordered for upfitter installation.

INTEGRATED AUXILIARY MICROPHONE WIRING

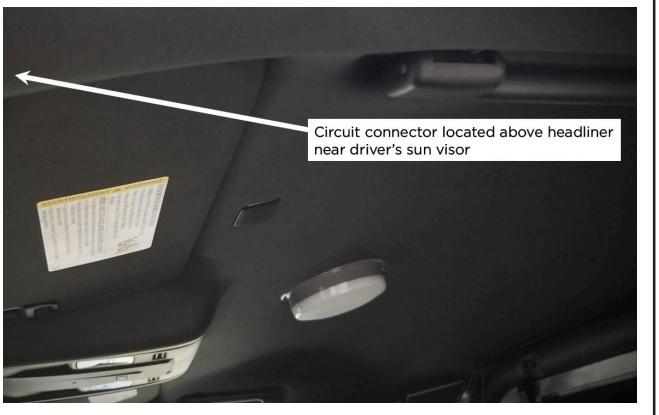

Hands free auxiliary microphone wiring has been provided for usage with after-market 2 way police radios. It's designed to be used with the re-purposed LH steering wheel lower button and associated momentary grounding output circuit number 8021 BN/GY wire. It's further enhanced with the OEM AM/FM radio mute feature using circuit number 10137 GY/WH wire connected to the aftermarket 2 way radio unit. Note: Vehicles produced before February 25, 2026 may require a software update for this feature to function properly.

- Connector PN 13533335 and terminal PN 82400628 are needed to mate with the OEM provided headliner connector
- See adjacent photo for the location of the OEM provided circuit branch/connector in the headliner.

GM is not responsible for the safety or quality of design features, materials or workmanship of any alterations by third parties.

STANDARD ELECTRICAL FEATURES

WIRING PROVISIONS FOR 12-VOLT BATTERY POWER SUPPLY

The vehicle is equipped with wiring provisions for connecting the Auxiliary Battery to customer installed equipment. Upfitter wiring harnesses are located between the front seats and at the left side of the cargo area, rearward of the auxiliary battery. Wire circuits in the front (CONSOL) and rear (CARGO) upfitter harnesses are identified by numbered tags on the wires. The upfitter circuits are identified in the Upfit Wiring Harness Circuit Identification chart. A wiring
diagram for the control relays is provided in this specification document.
The Primary Battery provides 12 volt power to four relays which are controlled by customer grounding to the upfit relays via circuits 8895, 8896, 8897 and 8898. Customer equipment load is connected to the control relay contacts via circuits 8911, 8912, 8913 or 8914 listed in the Upfit Wiring chart. Ground circuit wires are also found in the Wiring Chart.
Refer also the Wiring Chart for Vehicle Systems Signals for Vehicle Speed, Interruptible Retained Accessory Power*, Run/Crank Ignition Power, Driver Door Ajar, Surveillance On/Off, Brakes Applied, Park Enable and IP Dimming.
* See Page 46 of this guide for detail

AUXILIARY BATTERY FUSE BLOCK X50EA

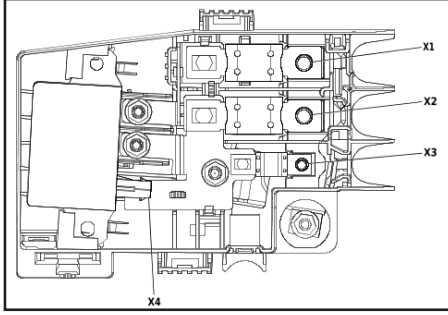

X4 = Auxiliary Battery Relay KR81

Fuse and Upfit Circuit Designations
X1 = F1BB 642 100A
X2 = F2BB 842 100A
X3 = F3BB 742 50A

RADIO MUTE FEATURE

A Radio Mute circuit (#10137) is provided to permit muting of the vehicle radio when an emergency vehicle radio is transmitting. It is the Gray/White blunt cut wire located between the front seats near the upfitter branch harness.

The following customer device electrical specifications must be met to avoid damage to the vehicle Exterior Lighting Module (ELM) input circuitry:
- No inductance allowed
- Maximum Load Capacitance: 600 nano-farads.
- Maximum Closed switch contact resistance: 20 ohms
- Minimum Open switch contact resistance: 100,000 ohms

EXTERIOR LAMPS EMERGENCY FLASHING SYSTEM

Flasher System provides headlamp high beam flashing and rear lamps flashing via the Exterior Lighting Module (ELM). The exterior lamps flashing is activated by customer switching of ground circuits in the upfitter harness located between the front seats (CONSOL) in the rear cargo area (CARGO). Headlamp high beam flashing is activated via connection of upfitter circuit 8863 to ground via customer switching. The headlamps and high beam indicator will flash alternately at 3 flashes per second. Rear lamps flashing is chosen by the customer to flash either Red-White alternately (Brake lamps and Reverse Lamps, grounding upfitter circuit 8865) or Red-Red alternately (Left and Right Brake Lamps, grounding upfitter circuit 8864). The rear lamps flash rate is 3 per second. Depressing the Brake pedal will override the brake lamp flashing and placing the transmission in Reverse will override the reverse lamps flashing.
During daylight conditions, the Daytime Running Lamps (DRL) are automatically turned off whenever the Lamp Flashing System is activated. During night time conditions the low beam headlamps and tail lamps automatically turn on while the high beams flash. Turning on the high beam headlamps will override high beam flashing. The Center Mounted Stop Lamp will operated only when the service brakes are applied.
NOTES:
- Wiring connection or splice changes are to be removed before the vehicle is returned to civilian use.
- For wiring diagram see Wiring Section

INSTRUMENT PANEL AUXILIARY JUNCTION BLOCK

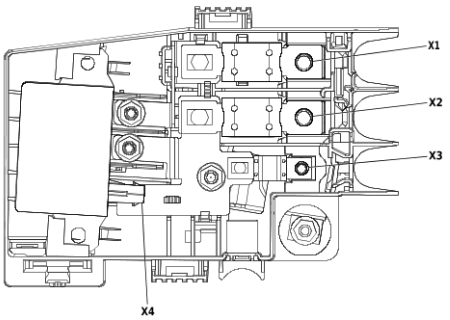

Auxiliary Fuse Block is located above brake pedal

Junction Block	Upfit Wiring Diagram
K124	R161A
K125	KR161B
K126	KR161C
K127	KR161D
K128	Not Used

Fuse and Upfit Circuit Designations

F160	5A	239	F164	5A	239
F161	5A	2742	F165	5A	2742
F162	25A	8911	F166	20A	8913
F163	20A	8912	F167	25A	8914

AVAILABLE EXTERIOR COLORS

(ACTUAL COLORS MAY VARY)



Black



Summit White



Sterling Gray Metallic



Lakeshore Blue Metallic



Dark Ash Metallic



White Sands WA-234L



Radiant Red Tintcoat
Extra Charge

SEO PAINT AVAILABLE[1]

(ACTUAL COLORS MAY VARY)



Silver Ice Metallic
WA-636R



Dark Blue Metallic
WA-722J



Victory Red
WA-9260

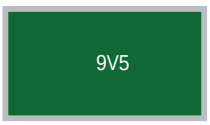

Woodland Green
WA-9015

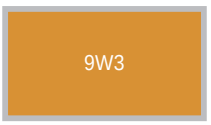

Wheatland Yellow
WA-253A



MSP Blue Goose
WA-5665
(Pantone® 661C)

Note: Will require 5 orders before sending to plant
1 – Requires SEO (5T4) special paint solid.

AVAILABLE INTERIOR COLOR

(ACTUAL COLORS MAY VARY)



Jet Black Cloth

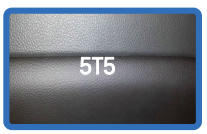

Jet Black Vinyl



FRONT SEATS AND INTERIOR TRIM

STANDARD FRONT ROW SEATING

AZ3 40/20/40 INDIVIDUAL SEATS FOR 3 FRONT OCCUPANT - CLOTH 10-way power driver seat and 6-way power passenger seat, both with 2-way power lumbar. Center seat folds-down for armrest and cup holders or can be unbolted for removal. Bottom center seat cushion lifts for storage. Two, 120-volt, 3.33-amp, 400-watts outlets mounted on backside of center seat.

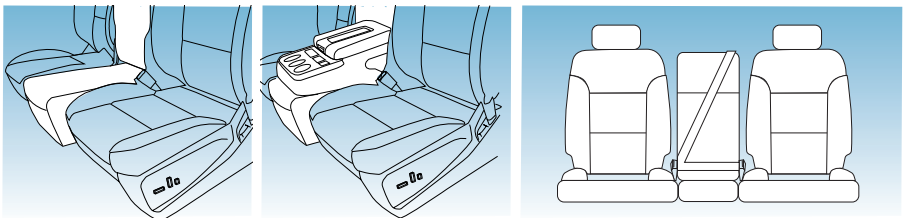

Seat Code	Seat Trim	Color	Color Code
AZ3	Cloth	Jet Black	H1T

- Front cloth and vinyl rear seat combination is available by ordering option 5T5 and requires Jet Black (HOU)
- Center seat can be unbolted for removal

5Y1 OPTIONAL FRONT ROW SEATING

AZ3 & OPTION 5Y1 FRONT CENTER SEAT DELETE WITH CLOTH 40/40 INDIVIDUAL SEAT - Power driver and passenger bucket seats in base cloth trim. Derived from RPO (AZ3) 40/20/40 split-bench seat with the 20% section removed, which also removes the auxiliary power outlet, USB port and input jack for audio system. Does not include a floor console.
All exposed floor area will remain untrimmed. On 2WD model, not available with (B30) color-keyed carpeting floor covering. On 4WD model, not available with (A50) front bucket seats or (B30) color-keyed carpeting floor covering. (UBD) 2 type-A and C, charge and data USB ports and (KI4) Two, 120-volt, 3.33-amp, 400-watts outlets are bundled and shipped loose when ordered for upfitter installation.

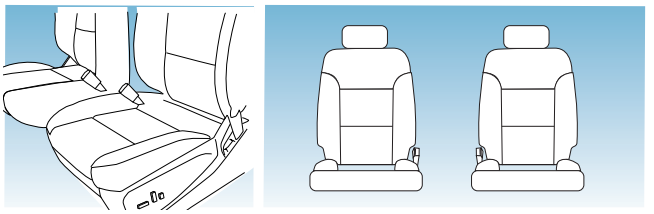

Seat Code	Seat Trim	Color	Color Code
AZ3 & 5Y1	Cloth	Jet Black	H1T

- Front cloth and vinyl rear seat combination is available by ordering option 5T5 and requires Jet Black (H1T)
- Requires (BG9) Black rubberized vinyl floor covering

A50 OPTIONAL FRONT ROW SEATING

A50 SEATS, FRONT BUCKET - 4WD only. Requires (PQA) 1FL Safety Package and (UDA) OnStar deactivation. Includes (D07) floor console. Not available with SE0 (5Y1) front center seat delete or SE0 (5T5) front cloth and second row vinyl seats. Deletes OnStar, (U5G) 5G Wi-Fi Hotspot capable, (VV4) Wi-Fi Hotspot capable and (T8Z) Buckle to Drive.

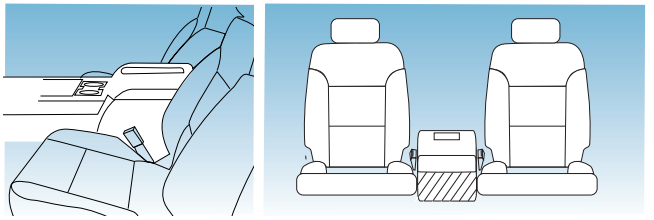

Seat Code	Seat Trim	Color	Color Code
A50	Cloth	Jet Black	H1T

- Option 5T5 vinyl second row seat not available when Option A50 is ordered.
- Console cannot be deleted
- Requires PQA Safety Package
- Requires UDA OnStar deactivated.

REAR SEATS AND INTERIOR TRIM

STANDARD CLOTH SECOND ROW SEATING

AT6 CLOTH SECOND ROW SPLIT-FOLDING BENCH, MANUAL SEATS - Includes folding center armrest with cup holder

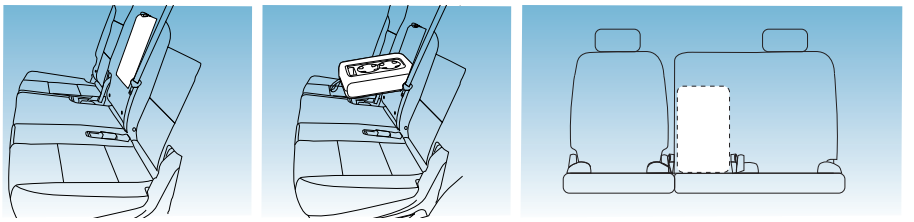

Seat Code	Seat Trim	Color	Color Code
AT6	Cloth	Jet Black	H1T

- Color is based on front seat choice

5T5 OPTIONAL VINYL SECOND ROW SEATING

5T5 VINYL REAR SEAT - Vinyl Second Row 60/40 Split-folding Bench Seat (Option 5T5). On 4WD model, not available with A50 Front Bucket Seats.

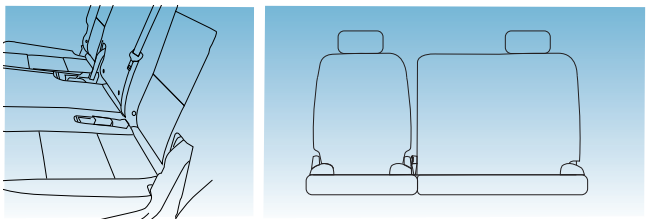

Seat Code	Seat Trim	Color	Color Code
5T5	Vinyl	Jet Black	H1T

- Front cloth and vinyl rear seat combination is available by ordering option 5T5 and requires Jet Black (H1T)
- Does not include rear passenger armrest or cup holders

OPTIONAL SAFETY AND DRIVER ASSISTANCE PACKAGE

PQA INCLUDES THE FOLLOWING FEATURES

UEU FORWARD COLLISION ALERT [1]



The Forward Collision Alert (FCA) system may help to avoid or reduce the harm caused by front-end crashes with vehicle being followed. When approaching a vehicle ahead too quickly, FCA provides a red flashing alert on the windshield and rapidly beeps. FCA also lights an amber visual alert if following another vehicle much too closely. FCA detects vehicles within a distance of approximately 60m (197 ft) and operates at speeds above 8 km/h (5 mph).

Warning FCA is a warning system and does not apply the brakes. When approaching a slower-moving or stopped vehicle ahead too rapidly, or when following a vehicle too closely, FCA may not provide a warning with enough time to help avoid a crash. It also may not provide any warning at all. FCA does not warn of pedestrians, animals, signs, guardrails, bridges, construction barrels, or other objects. Be ready to take action and apply the brakes. FCA can be disabled with either the FCA steering wheel control or, if equipped, through vehicle personalization. Detecting the Vehicle Ahead FCA warnings will not occur unless the FCA system detects a vehicle ahead. When a vehicle is detected, the vehicle ahead indicator will display green. Vehicles may not be detected on curves, highway exit ramps, or hills, due to poor visibility; or if a vehicle ahead is partially blocked by pedestrians or other objects. FCA will not detect another vehicle ahead until it is completely in the driving lane.

FCA does not provide a warning to help avoid a crash, unless it detects a vehicle. FCA may not detect a vehicle ahead if the FCA sensor is blocked by dirt, snow, or ice, or if the windshield is damaged. It may also not detect a vehicle on winding or hilly roads, or in conditions that can limit visibility such as fog, rain, or snow, or if the headlamps or windshield are not cleaned or in proper condition. Keep the windshield, headlamps and FCA sensors clean and in good repair.

UHY AUTOMATIC EMERGENCY BRAKING [1]

The brakes may be applied automatically in potential collision situations to help reduce damage or help avoid collisions with vehicles directly ahead.

When the system detects a vehicle ahead in your path that is traveling in the same direction that you may be about to crash into, it can provide a boost to braking or automatically brake the vehicle. This can help avoid or lessen the severity of crashes when driving in a forward gear. Depending on the situation, the vehicle may automatically brake moderately or hard. This forward automatic braking can only occur if a vehicle is detected. This is shown by the Forward Collision Alert.

To set the Automatic Emergency Braking and Forward Collision Alert systems to Alert and Brake, Alert, or Off, go to; Settings> Vehicle> Collision/Detection Systems> Forward Collision System.

UKM LANE KEEP ASSIST WITH LANE DEPARTURE WARNING [1]

Lane Keep Assist (LKA) may help avoid crashes due to unintentional lane departures. It may also provide a Lane Departure Warning (LDW) system alert as the lane marking is crossed. The LKA system will not assist or provide an LDW alert if it detects that you are actively leaving your lane. Override LKA by turning the steering wheel. LKA uses a camera to detect lane markings between 60 km/h (37 mph) and 180 km/h (112 mph).

How the System Works:

The LKA camera sensor is on the Windshield. To turn LKA on and off, press to the left of the steering wheel.

When on, is green if LKA is available to assist and provide LDW alerts. It may assist by gently turning the steering wheel and display as amber if the vehicle approaches a detected lane marking without using a turn signal in that direction. It may also provide an LDW alert by flashing amber as the lane marking is crossed. The LKA system does not continuously steer the vehicle. If LKA does not detect active driver steering, an alert, chime, or DIC message may be provided. Steer the vehicle to dismiss. LKA has limited nighttime and low visibility performance.

1.Safety or driver assistance features are no substitute for the driver's responsibility to operate the vehicle in a safe manner. The driver should remain attentive to traffic, surroundings and road conditions at all times. Visibility, weather, and road conditions may affect feature performance. Read the vehicle's owner's manual for more important feature limitations and information.

OPTIONAL SAFETY AND DRIVER ASSISTANCE PACKAGE

(CONTINUED)

CTB INTERSECTION AUTOMATIC EMERGENCY BRAKING[1]

Can Help Avoid Collisions With Detected Vehicles in Cross Traffic Ahead of You Intersection Automatic Emergency Braking can help you avoid or reduce the severity of an intersection collision with a detected cross-traffic vehicle. It provides alerts and can even automatically provide hard emergency braking or enhance the driver's hard braking.

UOW SIDE BICYCLIST ALERT[1]

Warns You When Bicyclists May Be Approaching Your Blind Zone, Even Right After Parking. Side Bicyclist Alert alerts you to a detected bicyclist that is approaching a side blind zone. Also, during a brief time after parking, the feature can alert you when a detected bicyclist is approaching so you don't open your door.

TQ5 INTELLIBEAM

Automatically Turns High Beams On or Off in Response to Traffic Conditions At speeds above 25 mph, IntelliBeam can automatically turn the vehicle's high beams on and off according to surrounding traffic conditions.

UFB REAR CROSS TRAFFIC BRAKING[1]

Can Help Avoid Collisions With Cross Traffic Behind Your Vehicle When you're in Reverse, Rear Cross Traffic Braking alerts you and automatically provides hard emergency braking to help prevent a collision with detected vehicles crossing behind you.

UKT FRONT PEDESTRIAN AND BICYCLIST BRAKING[1]

Alerts You To Avoid Collisions With Pedestrians and Bicyclists Ahead And Can Even Use Automatic Emergency Braking.
At speeds between 5 and 50 mph, Front Pedestrian and Bicyclist Braking can help you avoid or reduce the severity of a collision with a pedestrian or bicyclist it detects directly in front of you. It provides alerts and can automatically provide hard emergency braking or enhance the driver's hard braking.

UKI BLIND ZONE STEERING ASSIST[1]

Can Help Alert You Of Potential Crashes When Entering Lanes. Blind Zone Steering Assist can alert you and provide a brief, firm turn of the steering wheel when a potential crash is detected with a moving vehicle in the lane you're entering.

DRZ REAR CAMERA MIRROR[1]



Inside rear-view auto-dimming with full camera display.
Provides a wide angle camera view of the area behind the vehicle.
Includes (CWA) Rear Camera Mirror Washer.
Pull the tab to turn on the display.
Push the tab to turn it off. When off, the mirror is automatic dimming.
Adjust the mirror for a clear view of the area behind the vehicle while the display is off.
On 2WD, included and only available with (PQA) 1FL Safety Package. On 4WD model, included with (PQA) 1FL Safety Package.
When (PQA) 1FL Safety Package is not ordered, requires (UE1) OnStar and (AZ3) 40/20/20 split-bench seat.
The Rear Camera Mirror may not work properly or display a clear image if there is glare from the sun or headlamps or Dirt, snow, or other debris blocks the camera lens or The camera's mounting on the vehicle has been damaged, and/or the position or the mounting angle of the camera has changed. Clean the lens with Rear Camera Washer or a soft damp cloth. This may obstruct objects from view. If needed, push the tab to turn off the display.
WARNING: The Rear Camera Mirror (RCM) has a limited view. Portions of the road, Vehicles, and other objects may not be seen. Do not drive or park the vehicle using only this camera. Objects may appear closer than they are. Check the outside mirrors or glance over your shoulder when making lane changes or merging. Failure to use proper care may result in injury, death, or vehicle damage.

1. Safety or driver assistance features are no substitute for the driver's responsibility to operate the vehicle in a safe manner. The driver should remain attentive to traffic, surroundings and road conditions at all times. Visibility, weather, and road conditions may affect feature performance. Read the vehicle's owner's manual for more important feature limitations and information.

OPTIONAL EQUIPMENT

9G8 DELETE DAYTIME RUNNING LAMPS AND AUTOMATIC HEADLAMP

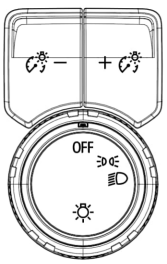

The headlamp control on the driver's side of the instrument panel operates the exterior lamps.
This option disables the Daytime Running amps and Automatic Headlamps control feature.
Exterior lamps are only manual controlled (Option 9G8 is not available in Canada).
When the headlamp switch is in OFF position with 9G8 installed, the instrument cluster, radio display and air conditioning illumination will adjust with the main light sensor (Located in the center of the IP by the windshield).
If it is light enough out, the displays will be at daytime intensity (MAX).
If dark enough, the displays will be in the nighttime intensity and are dimmable.

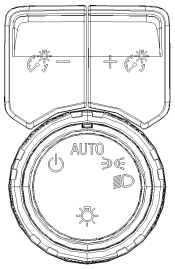

If your vehicle is in standard configuration (automatic light control) without 9G8, DELETE DAYTIME RUNNING LAMPS AND AUTOMATIC HEADLAMPS, the Daytime Running Lamps and Automatic Headlamps can be turned OFF for one ignition cycle by rotating the headlamp control knob momentarily counter-clockwise.
See lighting section of Owner's Manual.
The displays are dimmable with the Headlamp switch in the AUTO position (with or without auto lamp control on), and it is dark enough the light sensor is in night mode.
The instrument cluster, radio and AC displays will also dim to the minimum setting if the Surveillance Feature (5J3) is activated.

6E2 FLEET REMOTE KEY 6E8

The fleet REMOTE KEY feature allows the user to program a REMOTE KEY to be recognized by a particular vehicle for full remote functionality (Lock/Unlock and Remote Start if equipped). Use of this remote on other fleet keyed-a-like vehicles will be limited to unlocking the driver's door by pressing the exterior door handle button and starting the vehicle once inside. The remote lock/unlock and remote start (if equipped) buttons will not function unless the operator uses the Infotainment Screen to program the newly introduced REMOTE KEY. Note that a vehicle is only capable of recognizing the last 8 REMOTE KEYs programmed for full remote capability.
Adding a 9th remote REMOTE KEY will bump REMOTE KEY #1 remote functionality until it is reprogrammed through the Infotainment Screen, adding remote #1 back into the Infotainment Screen will bump REMOTE KEY #2 remote button functionality, etc.
There are no limitations to the amount of fleet keys that will be recognized to access and start the vehicle. Programming a newly introduced fleet REMOTE KEY through the Infotainment Screen is required to use the Protected Idle feature. Requires AMF.

Not compatible with 2020 model year or older vehicles equipped with this feature.

S1O CONSOLE MOUNTED SAFE



Dealer Installed.

Requires (A50) Front Bucket Seats.



OPTIONAL EQUIPMENT

7X2 SPOT LAMPS 7X3



7X3 Spot lamp left hand, pillar-mounted unity, 6-inch with LED lamps; independently fused.

7X2 Spot lamps left and right hand, pillar- mounted unity, 6-inch with LED lamps: independently fused.

NOTE:

- For fuse location see Wiring Section.
- Factory installation of spot lamps is recommended. Special tooling is used to locate and drill the spotlamp shaft hole in the windshield pillars.
- A customer furnished spotlamp assembly must be installed to avoid interference with proper deployment of roof rail mounted head-curtain and instrument panel passenger side airbags.

T53 LIFTGATE WARNING LAMPS



Red and Blue flashing LED warning lamps are mounted in the bottom of the liftgate and alternately flash when the liftgate is opened. A switch mounted near the left warning lamp turns the lamps on and off. The switch is shipped separately and must be customer-installed in the liftgate.
The switch is attached to the left side cargo area upfitter harness stowed to the rear of the auxiliary battery. (see photo) Install the switch by removing the cover from the mounting hole in the trim near the left warning lamp. Extract the switch connector through the trim hole and connect to the switch. Install the switch and connector assembly by snapping the switch into the trim hole. Operate the switch to turn the warning lamps ON and to turn the lamps OFF, and verify operation of the lamps.
The warning lamps can also be operated by connecting a circuit wire (8868) in the UPFIT WIRING HARNESS LIST to a customer emergency lighting controller. When circuit 8868 is grounded by the customer controller the lamps will flash. The liftgate switch can turn off the lamps when being flashed by the customer controller.

6C7 AUXILIARY DOME LAMP



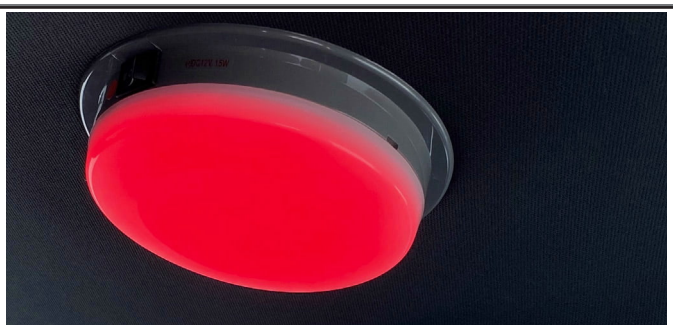

Auxiliary dome lamp is located on the headliner to the rear of the overhead console and is switched at the rear lamp base. Lamp is wired separately standard dome lamps with red and white LED bulbs.

OPTIONAL EQUIPMENT

6JG FRONT AND REAR EMERGENCY WARNING LAMPS

Red Left/Blue Right Whelen LED Lamp Package, four ION™ light heads mounted in front grille and integrated Outer Edge Rear Pillar with six ION™ light heads.

Blue Left/Blue Right (6JE), Red Left/Red Right (6J9) and White Left/White Right (6J8) also available.





OPTIONAL EQUIPMENT

6N5 SWITCHES – REAR WINDOW INOPERATIVE

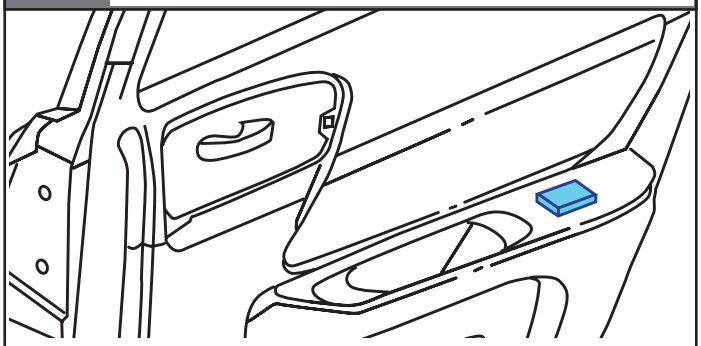

Rear door window switches are inoperable. Rear door power regulators are operable only from driver position switches.

6N6 REAR DOOR LOCKS AND HANDLES INOPERATIVE

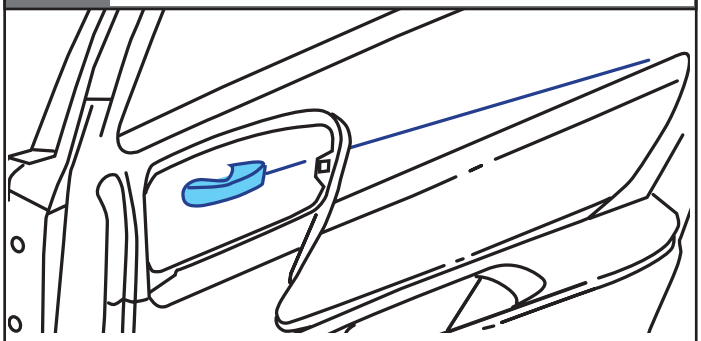

Rear door locking rods are disabled. Rear door locks are inoperable at rear doors, but operate from driver position. Inside rear door handles are disconnected. Rear doors can only be opened from the outside.

UN9 GROUND STRAPS AND HARDWARE KIT



To be installed by the customer or upfitter. The UN9 ground straps and hardware kit shown is wire tied to the rear cargo blunt cut harness and accessible when the driver side rear cargo area fuse panel access door is removed. This kit should be installed per the GM Upfitter Integration Technical Bulletin which can be found at the GM Upfitter site at the following link:https://www.gmupfitter.com Navigate to Technical Bulletins/ 173b Installing Ground Straps (UN9) Tahoe PPV.

UN9 RADIO SUPPRESSION GROUND STRAPS

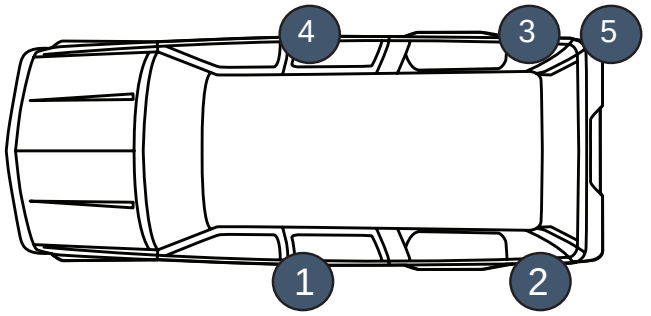

Provides additional grounding in the following locations:

1. Left hand front frame body mount bracket to underbody
2. Left hand rear frame body mount bracket to rear underbody
3. Right hand rear frame body mount bracket to rear underbody
4. Right hand front frame body mount bracket to underbody
5. Exhaust pipe hanger rod to rear frame hanger

NZV OPTIONAL ALUMINUM WHEEL & TIRE



20" x 9" (50.8cm x 22.9cm machined aluminum with charcoal pockets.

Includes (XCS) 275/55R20SL all-season, blackwall Firestone Pursuit tires.



OPTIONAL EQUIPMENT

6J3 WIRING PROVISIONS FOR VEHICLE GRILLE LAMPS AND SPEAKER/SIREN

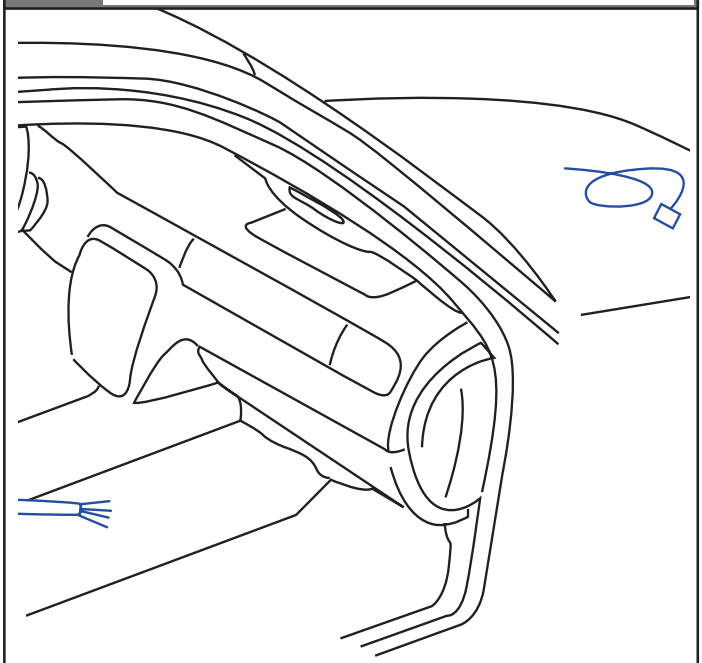

Blunt cut circuit wires are in the Upfit Branch Harness between front seats (CONSOL) and in cargo area (CARGO) as listed in Upfit Wiring Harness List.
The blunt cut circuit wires for customer-furnished grille lamps and siren speaker are coiled at the radiator.
Circuits 8855 and 8856 are for powering LED grille lamps.
Circuit 8857 is ground.
Circuit 8858 is for lamp sync.
Circuit 8859 is for lamp steady burn. 8860 circuit is spare
Circuit 8861 is speaker high and 8862 is speaker low.
NOTES: Wiring connection or splices are to be removed before the vehicle is returned to civilian use.

VQK SPLASH GUARDS, MOLDED

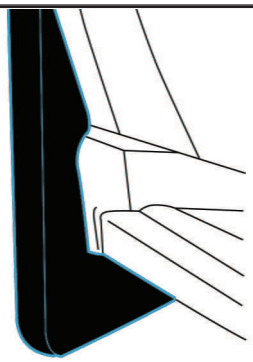

Black finish

WX7 WIRING PROVISION FOR FRONT SPEAKERS

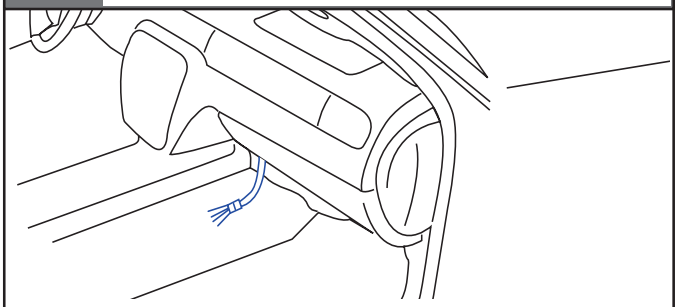

Approximately 60 inches (1.5 m) of auxiliary speaker wiring is coiled between the front seats (CONSOL) with the Upfitter Branch harness. The wiring permits connection of the front speaker pairs to customer-installed communication equipment. Vehicle radio front speaker outputs are rerouted to the rear speakers to maintain the required open door/key-in-ignition and other audible warnings.
NOTES:
- Wiring connection or splice changes are to be removed before the vehicle is returned to civilian use.
- For wiring diagram see Wiring Section

6J4 WIRING PROVISION FOR HORN SIREN CIRCUIT

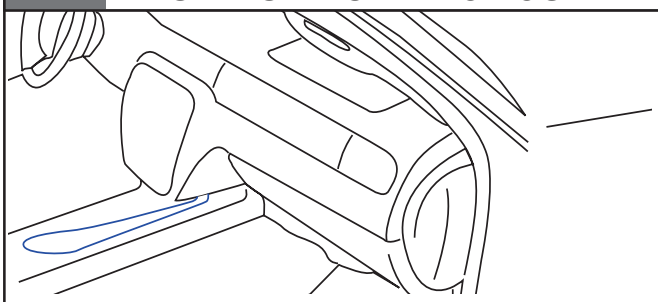

This provision permits customer connection of a switch to select either horn or siren operation when the horn pad is pressed.
A 22-gauge (0.35 mm2) wire is connected to an in-line connector in the horn circuit of the instrument panel harness under the instrument panel. The end of this harness extension is a 5-foot (1.5 m) loop of wire coiled under the center of the instrument panel.
NOTES:
- Wiring connection or splice changes are to be removed before the vehicle is returned to civilian use.
- For wiring diagram see Wiring Section

UPFIT WIRING HARNESS CIRCUIT[1] IDENTIFICATION BETWEEN FRONT SEATS AND LEFT SIDE CARGO SPACE

Original Equipment Alterations: Limited warranty does not cover any damage or failure resulting from modification or alteration to the vehicle's original equipment as manufactured or assembled by General Motors. Examples of the types of alterations that would not be covered include: installation or use of any non-GM part, accessory, materials, or the cutting, welding or disconnecting of the vehicle's original equipment parts and components. Any upfit device[1] connected to the open ended upfit circuits should be fuse protected per the Wire Gage table on page 45.

SEO 6J1 – WIRING PROVISIONS FOR 12 VOLT BATTERY POWER, IGNITION POWER AND SIGNALS
X51AX IP AUXILIARY JUNCTION BLOCK RELAYS FOR CUSTOMER CONNECTION

CIRCUIT NO.	WIRE COLOR	CIRCUIT DESCRIPTION	UPFITTER CONNECTION LOCATION		
8895	BU/YE	COIL LOW SIDE, RY 1 of 4	IP RY CTR, CONSL, Ry coil grounding		
8896	GN/YE	COIL LOW SIDE, RY 2 of 4	IP RY CTR, CONSL, via customer		
8897	GY/YE	COIL LOW SIDE, RY 3 of 4	IP RY CTR, CARGO switching		
8898	VT/YE	COIL LOW SIDE, RY 4 of 4	IP RY CTR, CARGO		
8911	RD/GN	RELAY 1 CONTACT LOAD SIDE	IP RY CTR, CONSL	F162	25A
8912	RD/GY	RELAY 2 CONTACT LOAD SIDE	IP RY CTR, CONSL	F163	20A
8913	RD/WH	RELAY 3 CONTACT LOAD SIDE	IP RY CTR, CARGO	F166	20A
8914	RD/YE	RELAY 4 CONTACT LOAD SIDE	IP RY CTR, CARGO	F167	25A

AUXILIARY BATTERY POWER AND GROUND

842	RD/VT	BATT FUSE 50 AMP	AUX BATT FUSE, CONSL,	
742	RD	BATT FUSE 100 AMP	AUX BATT FUSE, CARGO	
7350	BK - 100 sq mm	GROUND G409	CONSL, CARGO	
7150	BK - 10 sq mm	GROUND G300,	CONSL	

VEHICLE SYSTEMS SIGNALS

817	GN/GY	4K PPM SPEED	ECBM, CONSL, CARGO	
2801	VT	INTERRUPTIBLE RETAINED ACCY PWR*	RAP RY, CONSL, CARGO	
4939	VT/WH	RUN/CRNK IGN 1	RUN/CRNK RY, CONSL, CARGO	
8917	BU/BN	DR DOOR AJAR	DOOR AJAR CKT, CONSL, CARGO	
6821	WH/VT	SURVEILLANCE	BCM, CONSL	
820	BN/YE	BRAKES APPLIED	CHMSL, CONSL, CARGO	
5813	YE/BK	PARK ENABLE	TRANS IN PK RY, CONSL, CARGO	
6817	YE	IP DIMMING	BCM, CONSL, CARGO	

SEO 6J1/UT7, UT7 – GROUNDS

7150		5 sq mm	CONSL	GROUND - 60 AMP
7350		10 sq mm	CARGO	GROUND – 80 AMP

STEERING WHEEL SWITCHES

8021	BN/GY	PUSH-TO-TALK	BCM, CONSL, CARGO
8022	GY/VT	LIGHTS CONTROL	BCM, CARGO

WIRING PROVISION FOR CUSTOMER RADIO MICROPHONE ABOVE DRIVER POSITION.

1850	BK	GROUND	HEADLNR, CONSL, CARGO
8899	BU/WH	POLICE MIC	HEADLNR, CONSL, CARGO
8900	BU/VT	POLICE MIC	HEADLNR, CONSL, CARGO

GM is not responsible for the safety or quality of design features, materials or workmanship of any alterations by third parties.

UPFIT WIRING HARNESS CIRCUIT[1] IDENTIFICATION BETWEEN FRONT SEATS AND LEFT SIDE CARGO SPACE

Original Equipment Alterations: Limited warranty does not cover any damage or failure resulting from modification or alteration to the vehicle's original equipment as manufactured or assembled by General Motors. Examples of the types of alterations that would not be covered include: installation or use of any non-GM part, accessory, materials, or the cutting, welding or disconnecting of the vehicle's original equipment parts and components. Any upfit device[1] connected to the open ended upfit circuits should be fuse protected per the Wire Gage table on page 45.

SEO 6J3 - WIRING PROVISION FOR GRILLE LAMPS AND SIREN SPEAKER (BRANCH HARNESS COILED AT GRILLE)

CIRCUIT NO.	WIRE COLOR	CIRCUIT DESCRIPTION	UPFITTER CONNECTION LOCATION
8855	BN	12V-LED 1	CONSL, CARGO
8856	BN/BU	12V-LED 2	CONSL, CARGO
8857	BK/BN	GROUND	CONSL, CARGO
8858	WH	LED 1, 2 LAMPS SYNC	CONSL, CARGO
8859	BN/YE	STEADY BURN	CONSL, CARGO
8860	WH/BK	SPARE	CONSL, CARGO
8861	GN/WH	SIREN SPEAKER HIGH	CONSL, CARGO
8862	BU/WH	SIREN SPEAKER LOW	CONSL, CARGO

FLASHER SYSTEM, HEADLAMPS AND TAIL LAMPS ALTERNATE FLASHING

8863	GN	HI BEAM HDLP FLASH ENABLE	ELM, CONSL, CARGO
8864	BU/GN	L/R TAIL LP RED/RED ENABLE	ELM, CONSL, CARGO
8865	GY/GN	L/R TAIL LP RED/WHT ENABLE	ELM, CONSL, CARGO

SEO 6J4 – WIRING PROVISION FOR HORN-SIREN ALTERNATE OPERATION

28	BN/WHT	CUSTOMER SWITCH CONNECT	LOOP BETWEEN FRONT SEATS

SEO WX7 – WIRING PROVISION FOR CUSTOMER CONNECTION TO FRONT DOOR SPEAKERS

CIRCUITS FOR CONNECTION OF FRONT DOOR SPEAKERS TO POLICE RADIO

LH FRT POS	BN/BU	LF DOOR SPEAKER	
LH FRT NEG	BU	LF DOOR SPEAKER	
RH FRT POS	YE/BK	RF DOOR SPEAKER	
RH FRT NEG	YE	RF DOOR SPEAKER	

CIRCUITS RECONNECT RADIO FRONT OUTPUT TO REAR DOOR SPEAKERS

LH RR POS	GN/BK	TO LH RR SPEAKER	
LH RR NEG	GN	TO LH RR SPEAKER	Wire blunt cuts are positioned
RH RR POS	BU/BK	TO RH RR SPEAKER	between front center seats for
RH RR NEG	WH	TO RH RR SPEAKER	customer connection.

CIRCUITS RECONNECT RADIO OUT TO RR DOOR SPEAKERS

LH FRT POS	BU/BN	RADIO OUT LF SPEAKER
LH FRT NEG	BU	RADIO OUT LF SPEAKER
RH FRT POS	YE/BK	RADIO OUT RF SPEAKER
RH FRT NEG	YE	RADIO OUT RF SPEAKER

CIRCUITS ABANDONED WHEN WX7 INSTALLED

LH RR POS	GN/BK	RADIO OUT LR SPEAKER
LH RR NEG	GN	RADIO OUT LR SPKER
RH RR POS	BU/BK	RADIO OUT RR SPKER
RH RR NEG	WH	RADIO OUT RR SPKER

RADIO MUTE FEATURE WHEN POLICE RADIO TRANSMITTING

10137	GY/WH	RADIO MUTE ENABLE	Blunt cut from IP to center floor

GM is not responsible for the safety or quality of design features, materials or workmanship of any alterations by third parties.

UPFIT WIRING HARNESS CIRCUIT[1] IDENTIFICATION BETWEEN FRONT SEATS AND LEFT SIDE CARGO SPACE

Original Equipment Alterations: Limited warranty does not cover any damage or failure resulting from modification or alteration to the vehicle's original equipment as manufactured or assembled by General Motors. Examples of the types of alterations that would not be covered include: installation or use of any non-GM part, accessory, materials, or the cutting, welding or disconnecting of the vehicle's original equipment parts and components. Any upfit device[1] connected to the open ended upfit circuits should be fuse protected per the Wire Gage table on page 45.

SEO T53 – LIFTGATE LED WARNING LAMPS

CIRCUIT NO.	WIRE COLOR	CIRCUIT DESCRIPTION	UPFITTER CONNECTION LOCATION
8866	VT	12V LED LAMP	Circuits 8866, 7650, 8867 not available
7650	BK	GROUND	for customer connection.
8867	WH	LH, RH LED SYNC	Liftgate, CONSL, CARGO
8868	VT/YE	STEADY LED FLASH	ELM, CARGO
8869	VT/GN	LIFTGATE ENABLE SWITCH	Circuit 8869 not available for customer connection.

STANDARD T66 – WIRING PROVISION FOR OUTSIDE REARVIEW MIRRORS AND CARGO AREA SIDE WINDOWS

LH OUTSIDE MIRROR STROBE

8870	VT	12V LH LED	LH MIRROR, CARGO
8871	BK/VT	LED GROUND	Blunt cut ends to be in door.
8872	WH/VT	LF LED SYNC	
8873	BU/VT	STEADY BURN	
8874	YE/VT	FLASH ENABLE	

LH REAR WINDOW STROBE

8875	GN	12V RR WDO LED	LH RR WDO, CARGO
8876	BK/GN	LED GROUND	Blunt cut ends to be above and,
8877	WH/GN	LR LED SYNC	forward of rear edge of headliner.
8878	BU/GN	STEADY BURN	
8879	YE/GN	FLASH ENABLE	

RH OUTSIDE MIRROR STROBE

8880	GY	12V RH LED	RH MIRROR, CARGO
8881	BK/GY	LED GROUND	Blunt cut ends to be in door;
8882	WH/GY	RF LED SYNC	
8883	BU/GY	STEADY BURN	
8884	YE/GY	FLASH ENABLE	

RH REAR WINDOW STROBE

8885	BN	12V RR WDO LED	RH RR WDO, CARGO
8886	BK/BN	LED GROUND	Blunt cut ends to be above and
8887	WH/BN	RR LED SYNC	forward of rear edge of headliner.
8888	BU/BN	STEADY BURN	
8889	YE/BN	FLASH ENABLE	

SEO 6J8, 6J9, 6JE, 6JG – WHELEN LED LAMP PACKAGE

8890	BU 1	FRONT CORNER LIGHT POWER	CARGO
8891	BU/WH	CORNER STROBE SYNCHRONIZATION	CARGO
8892	GN	REAR CORNER LIGHT POWER	CARGO

GM is not responsible for the safety or quality of design features, materials or workmanship of any alterations by third parties.

UPFIT WIRING HARNESS CIRCUIT[1] IDENTIFICATION BETWEEN FRONT SEATS AND LEFT SIDE CARGO SPACE

Original Equipment Alterations: Limited warranty does not cover any damage or failure resulting from modification or alteration to the vehicle's original equipment as manufactured or assembled by General Motors. Examples of the types of alterations that would not be covered include: installation or use of any non-GM part, accessory, materials, or the cutting, welding or disconnecting of the vehicle's original equipment parts and components. Any upfit device[1] connected to the open ended upfit circuits should be fuse protected per the Wire Gage table on page 45.

SEO 7X2, 7X2/7X3 – LED SPOT LAMPS 7X2 LH ONLY, 7X2/7X3 LH & RH

CIRCUIT NO.	WIRE COLOR	CIRCUIT DESCRIPTION	UPFITTER CONNECTION LOCATION
10240	RD/GN	SECONDARY FUSE	7X2-LH A-PILLAR
1850	BK	GROUND	7X2-LH A-PILLAR
10340	RD	SECONDARY FUSE	7X3-RH A-PILLAR
1850	BK	GROUND	7X3-RH A-PILLAR

SEO 6C7 – AUXILIARY DOME LAMP

PRIMARY BATT	RD	12v POWER	VIA OVERHEAD CONSOLE
7350	BK	GROUND	

WIRE GAGE TABLE

	CABLE SIZE	
	CROSS SECTIONAL AREA VS AWG	
Amp	mm ^{2}	AWG
5	0.13	26
7.5	0.22	24
10	0.35	22
15	0.50	20
20	1.00	18
25	1.25	16
30	2.00	14
40	2.50	12
50	4.00	11
60	5.00	10
70	6.00	9
80	8.00	8
100	10.00	7

INTERRUPTIBLE RETAINED ACCESSORY POWER

The Power Mode Master (PMM) Controls components as needed. If equipped with a Retained Accessory Power (RAP) relay, the BCM controls the Retained Accessory Power with an exception: Interruptible Retained Accessory Power (IRAP) is deactivated during transmitter authentication. During Transmitter

Authentication the PMM will deactivate components including IRAP to prevent Radio Frequency (RF) Interference (RFI) that may cause a "NO REMOTE DETECTED" message to be displayed on the driver's information center.

Note: If transmitter Authentication occurs while in Run or Propulsion Modes, it is normal for IRAP to be interrupted momentarily (i.e. items connected to auxiliary power ports or chargers may momentarily go off then come back on). If a remote transmitter was not been previously detected, Transmitter Authentication can occur under any of the following conditions:

- **The driver's side front door is opened.**
- **The driver's side rear door is opened.**
- **The S38 Vehicle On/Off Switch is pressed.**

KEY FOR ACRONYMS AND TERMS

CONSOL = SPACE BETWEEN FRONT SEATS

CARGO = CARGO AREA LEFT SIDE

IP RY CTR = IP RELAY CENTER ABOVE AND TO RIGHT OF BRAKE PEDAL AUX

BATT = AUXILIARY BATTERY AT LEFT SIDE OF CARGO AREA

EBCM = ELECTRIC BRAKE CONTROL MODULE

4K PPM = 4000 PULSES PER MILE SPEED SIGNAL

ACCY = ACCESSORY

SURVEILLANCE = ALL AUTOMATIC LIGHTING DISABLED WHEN ACTIVATED

PARK ENABLE = PARK RELAY ACTIVATED

CHML = CENTER HIGH MOUNTED STOP LAMP; ON WHEN BRAKES APPLIED

BCM = BODY CONTROL MODULE

ELM = EXTERIOR LIGHT MODULE

WDO = WINDOW

SYNC = SYNCHRONIZED

GM is not responsible for the safety or quality of design features, materials or workmanship of any alterations by third parties.

OPERATION-DESCRIPTION OF SEO WIRING FEATURES

Refer to UPFIT WIRING CIRCUITS CHART for circuit wire numbers and colors

RELAY CONTROLLED 12 VOLT BATTERY POWER

A relay and fuse block (X51B) is located in the left instrument panel above the brake pedal. Four relays are provided for customer connection to 12 primary battery power. The relay coils are fused at 10 amps and are operated via connection to the coil ground side circuits in the upfitter harness branches between front seats or in the cargo area. Also in the upfitter harness branches are circuits for connection to the relay contact load sides. The relays are powered by the primary battery located in the engine compartment UBEC. Customer load is connected to the fused relay contact circuits (circuits chart 8911-8914). Power and ground from the Auxiliary Battery are located in the CONSOL upfitter branch (60 amp) and the CARGO area (80 amp).

VEHICLE SYSTEMS CIRCUITRY

The following Vehicle Systems Circuits are found in the upfitter branch harnesses between the front seats (CONSOL) and at the left side of the CARGO area:

817, Vehicle Speed Signal - 4000 pulses per mile square wave.

2801, Interruptible Retained Accessory Power* – 12 v when ignition in Accessory position. Times off after 10 min.

4939, Run-Crank, Ignition – 12 v when engine is being cranked or running.

8917, Driver Door Ajar – Ground from door latch switch when driver door is open.

6821 Surveillance – BCM calibration. Grounding the circuit disables all automatic lighting.

820, Brakes Applied – 12 v available when service brakes applied. 12 v Not confirmed

5813, Park Enable – 12 v available when transmission in Park.

6817, I P Dimming – Calibration for IP lighting dimming when circuit is grounded. Not confirmed

* See page 45 of this guide for detail

SEO 6J3 -WIRING PROVISION FOR GRILLE LAMPS AND SIREN SPEAKER OPTIONAL

Circuits for wiring grille lamps and a siren speaker are located in the CONSOL and CARGO area upfitter branch harnesses and are listed in the UPFIT WIRING CIRCUITS chart (circuits 8855-8862). A wiring harness is coiled at the radiator for connection to the customer provided front emergency lamps and siren speaker.

SEO 6J4 - WIRING PROVISION FOR HORN-SIREN ALTERNATE OPERATION OPTIONAL

A single wire loop is connected to the instrument panel wiring and located near the CONSOL upfitter branch harness. The wire can be connected to a steering wheel switch or other customer provided switch to operate the siren with the steering wheel horn button in place of the vehicle horn.

STEERING WHEEL SWITCHES

The steering wheel is equipped with switches for police radio or siren speaker Push-to-Talk and a switch for emergency lighting control.

WIRING PROVISION FOR POLICE RADIO MICROPHONE

Wiring circuits are included in the CONSOL and CARGO upfitter branch harnesses to connect to customer-provided police radio speakers mounted in the vehicle headliner (circuits 1850, 8899-8900).

SEO WX7 - WIRING PROVISION FOR CUSTOMER CONNECTION TO FRONT DOOR SPEAKERS

Wiring circuits are provided near the CONSOL upfitter branch harness to permit customer-installed communication equipment to be connected to the front door speakers; see circuit chart for wire colors. The vehicle radio front speaker outputs are re-routed to the rear door speakers to maintain the required door open, key-in-ignition seat belt and other audible warnings. A vehicle radio mute circuit is included (Note. Vehicles produced before February 25, 2026 may require a software update for this feature to function properly.)

SEO 6J7 – FLASHER SYSTEM, HEADLAMPS AND TAIL LAMPS ALTERNATE FLASHING.

Calibrations are available to alternately flash the headlamp high beams and either the tail lamps alternately Red-White or alternately Red-Red (circuits 8863-8865). Selecting High Beam or applying service brakes overrides flashing.

WIRING SCHEMATIC INDEX

STANDARD:

- 50EA Fuse Block Auxiliary Battery
- 51AX Junction Block Instrument Panel Auxiliary
- Vehicle Systems Signals (1 of 2, 2 of 2)
- LH and RH Wiring Provisions For Outside Mirror and Rear Quarter Windows Strobes
- Steering Wheel Switches
- Radio Microphone Provisions
- Headlamps and Rear Lamps Flashing System Provisions

OPTIONAL:

- 6J3 – Grille Lamps and Siren Speaker Wiring Provisions
- WX7 – Front Door Speakers Wiring Provisions
- 6J4 – Horn and Siren Control Provision
- T53 Liftgate Warning Lamps
- 7X2-7X3 – LED Spot lamps
- 6C7 – Auxiliary Dome Lamp

WIRING

50EA FUSE BLOCK AUXILIARY BATTERY

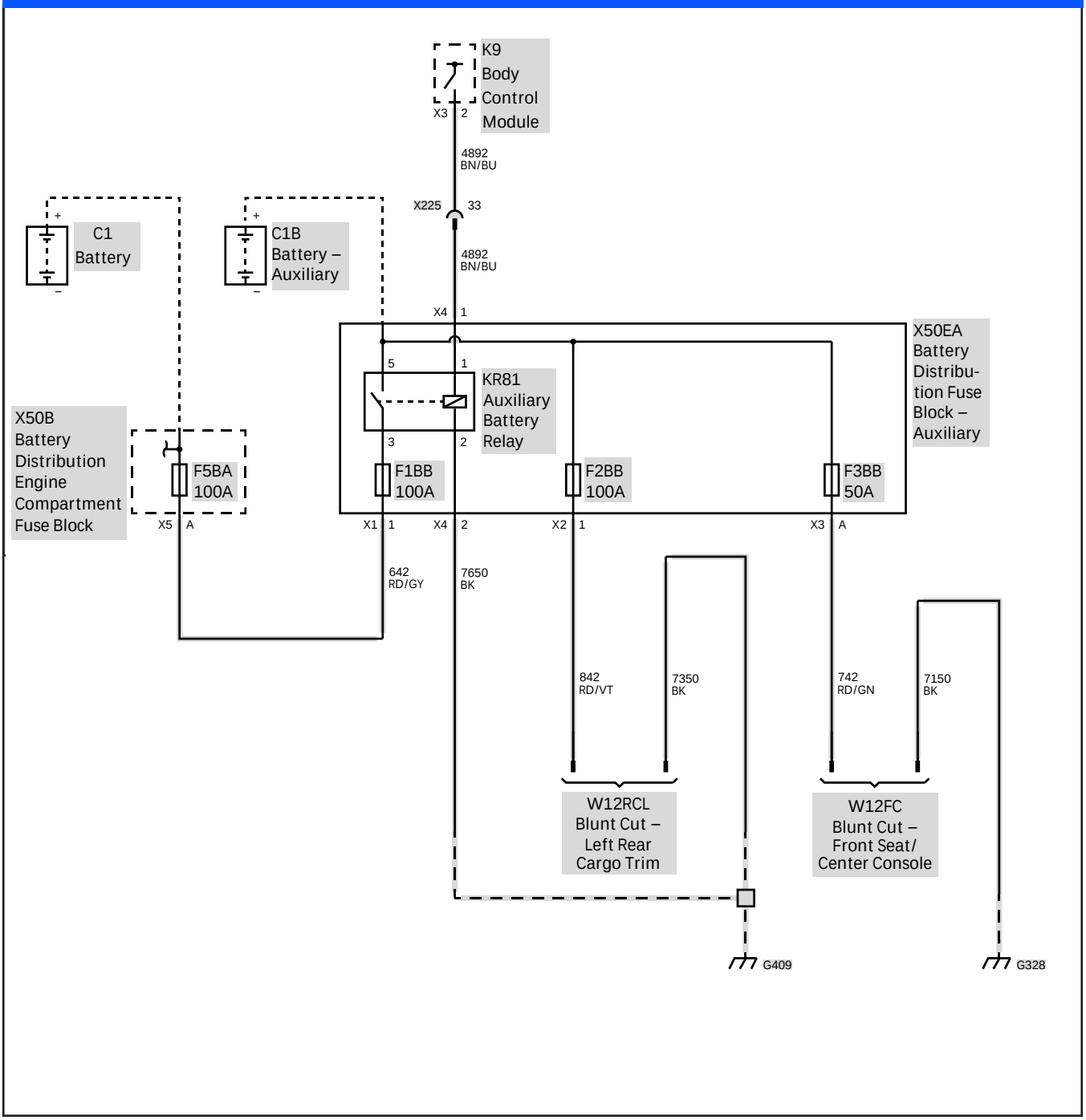

WIRING

X51AX JUNCTION BLOCK INSTRUMENT PANEL AUXILIARY

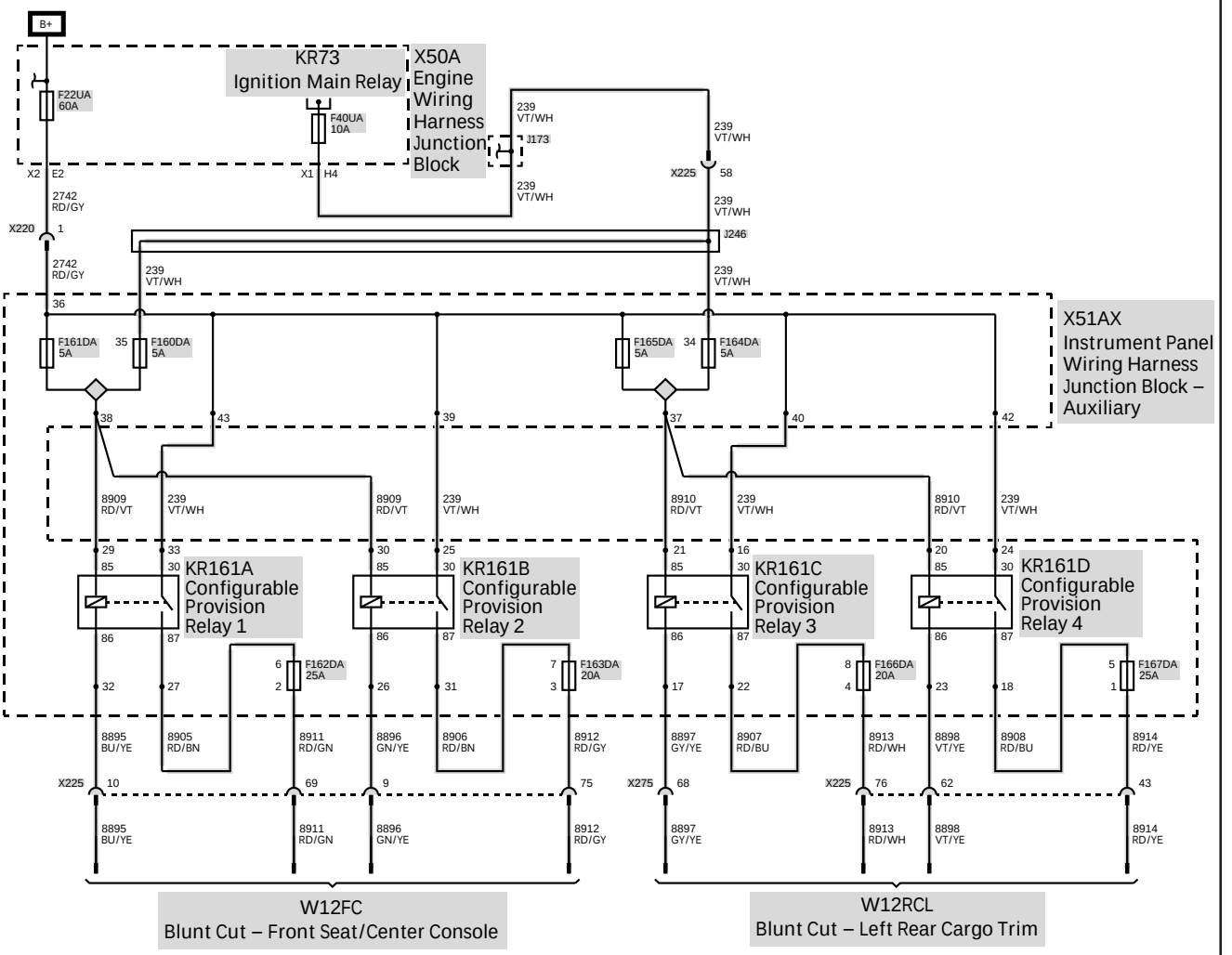

WIRING

VEHICLE SYSTEMS SIGNALS (1 of 2)

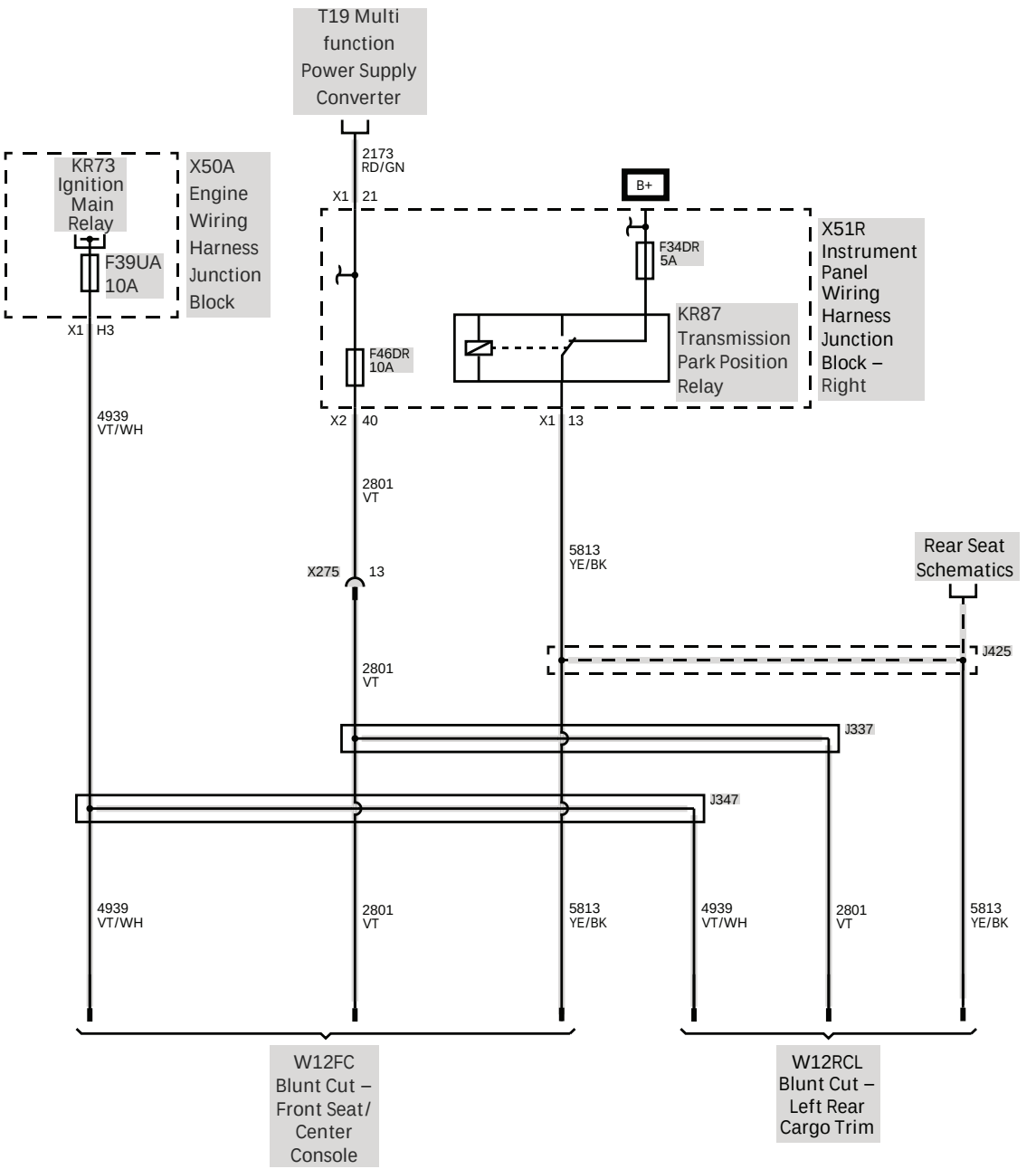

WIRING

VEHICLE SYSTEMS SIGNALS (2 of 2)

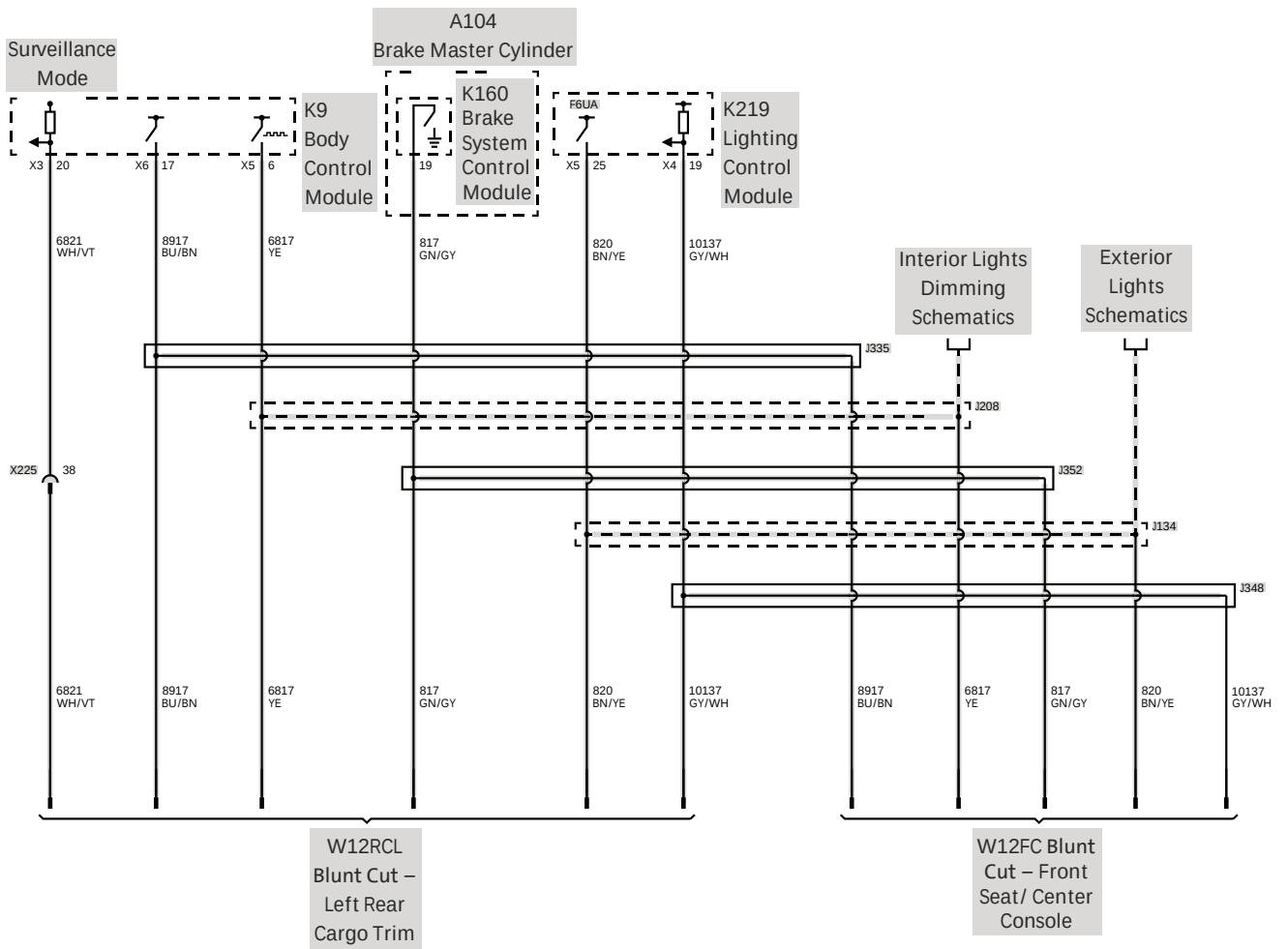

WIRING

OUTSIDE REARVIEW MIRROR AND REAR WINDOW STROBE PROVISION - LEFT (T66)

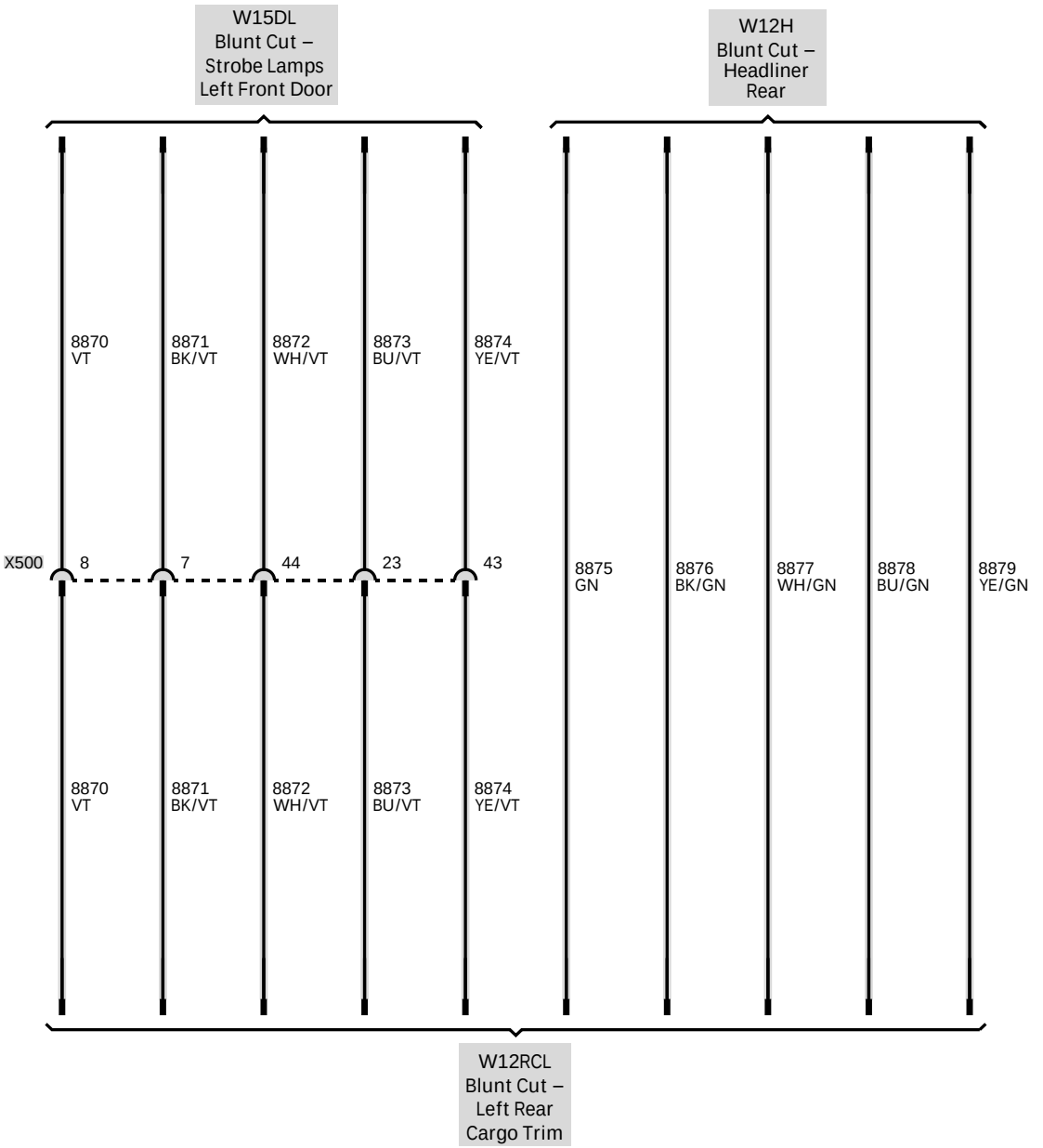

WIRING

OUTSIDE REAR VIEW MIRROR AND REAR WINDOW STROBE PROVISIONS RIGHT (T66)

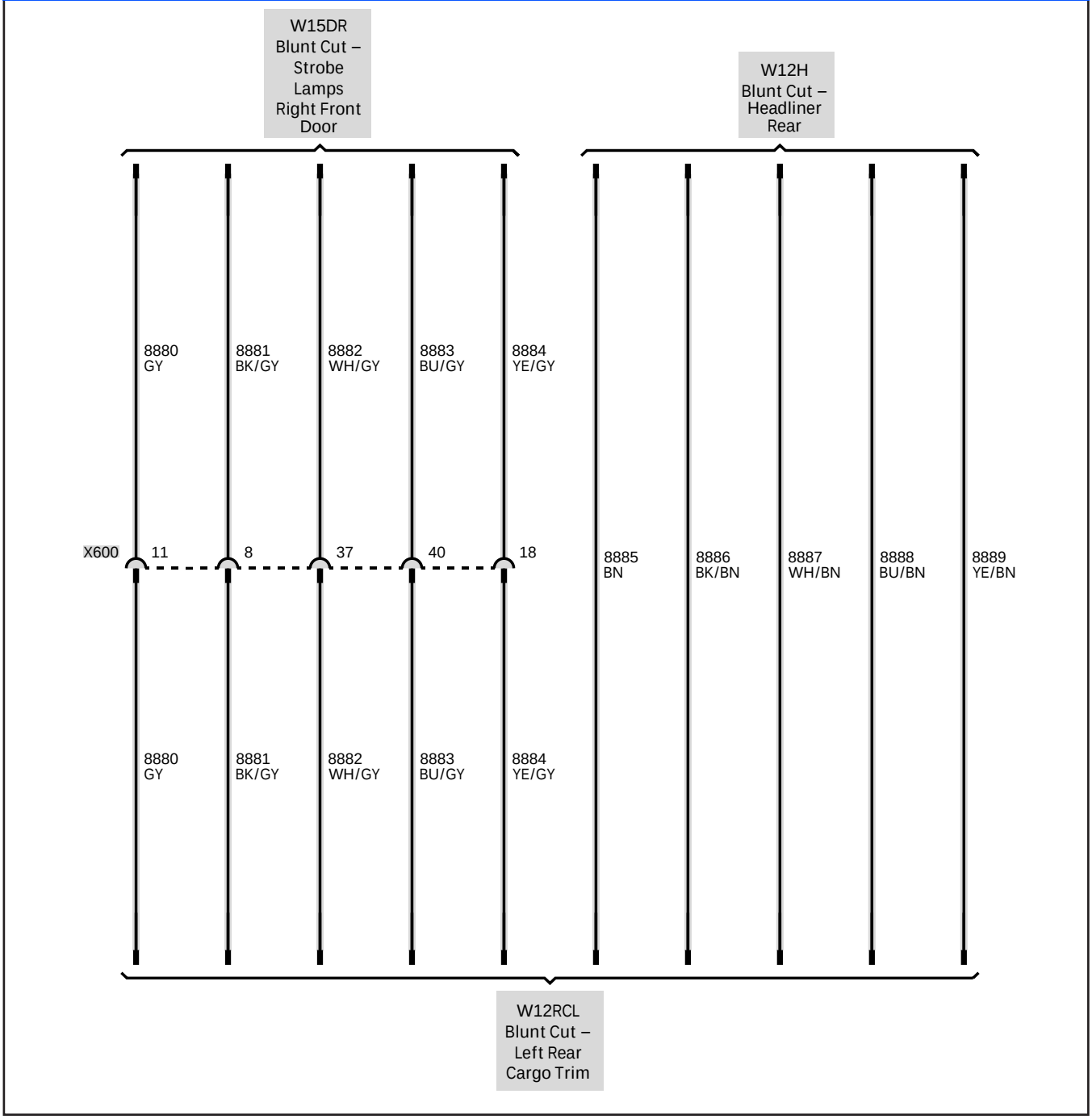

WIRING

STEERING WHEEL SWITCHES

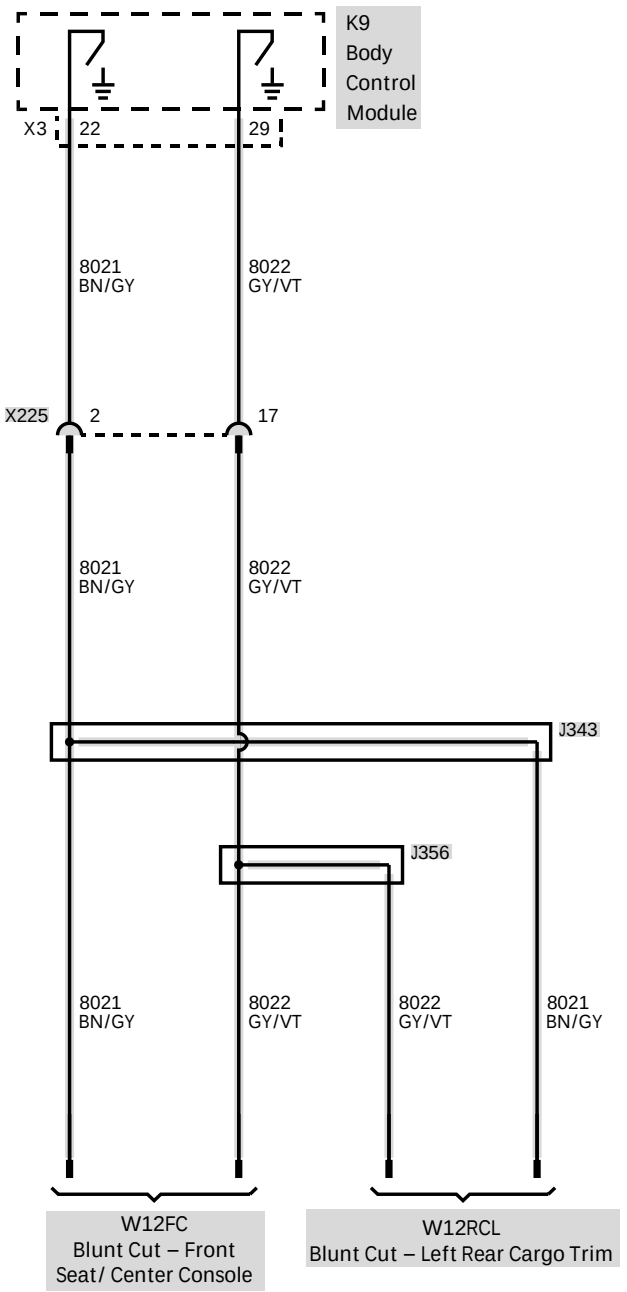

RADIO MICROPHONE PROVISIONS

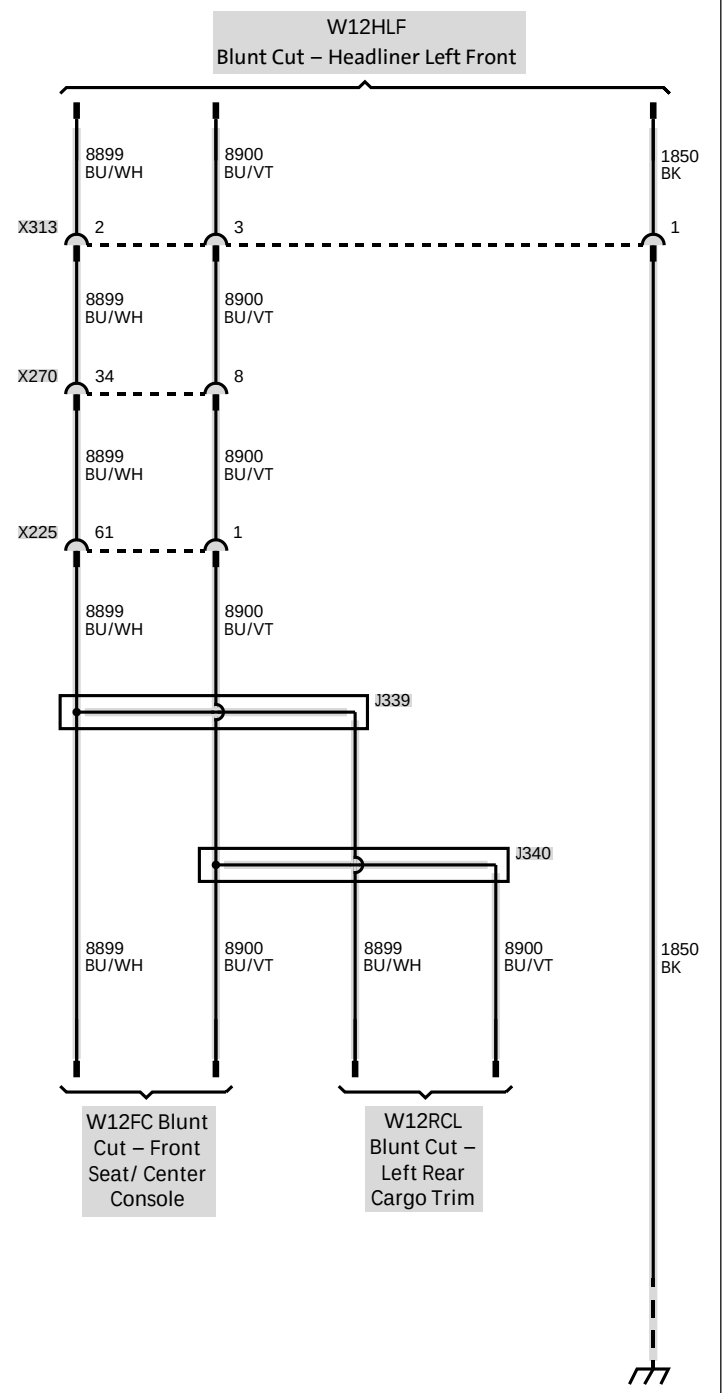

WIRING

6J7 - HEADLAMPS AND REAR LAMPS FLASHING SYSTEM PROVISIONS

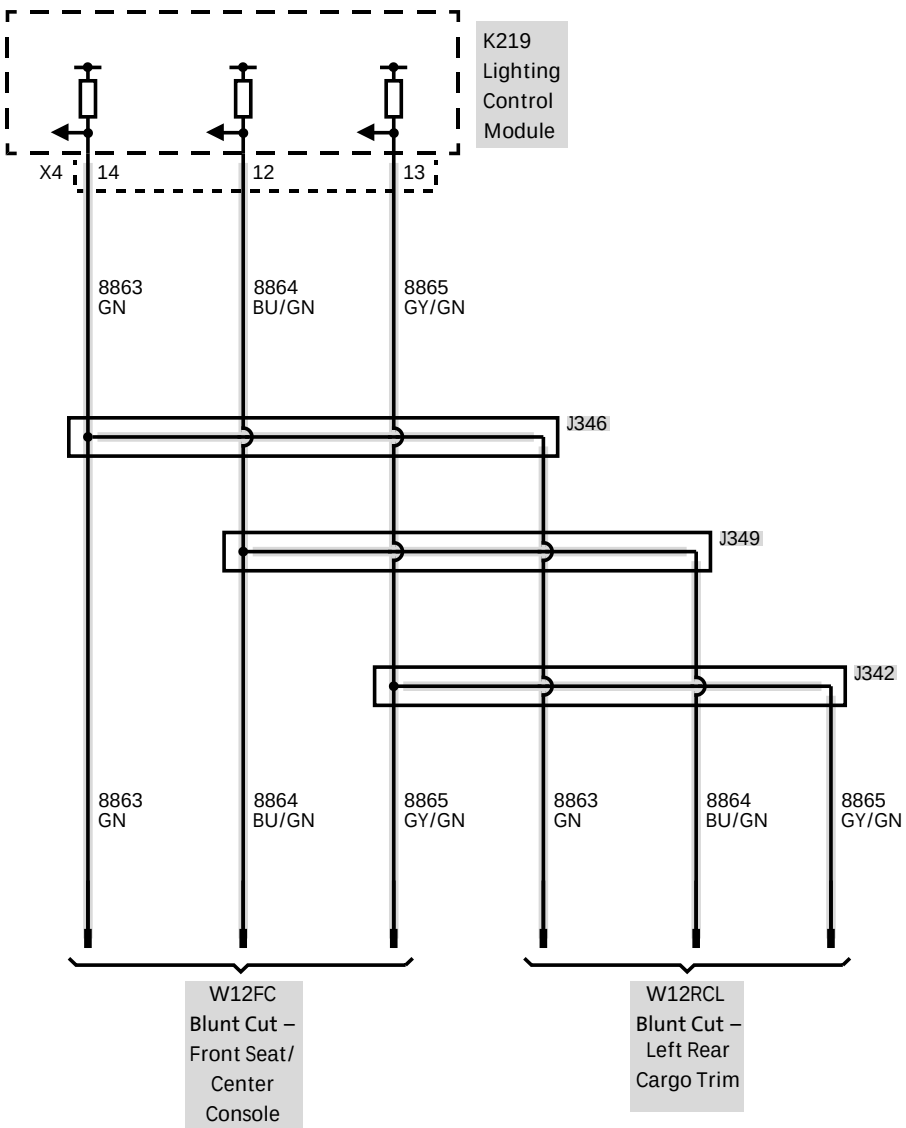

OPTIONAL WIRING

6J3 - GRILLE LAMPS AND SIREN SPEAKER PROVISIONS

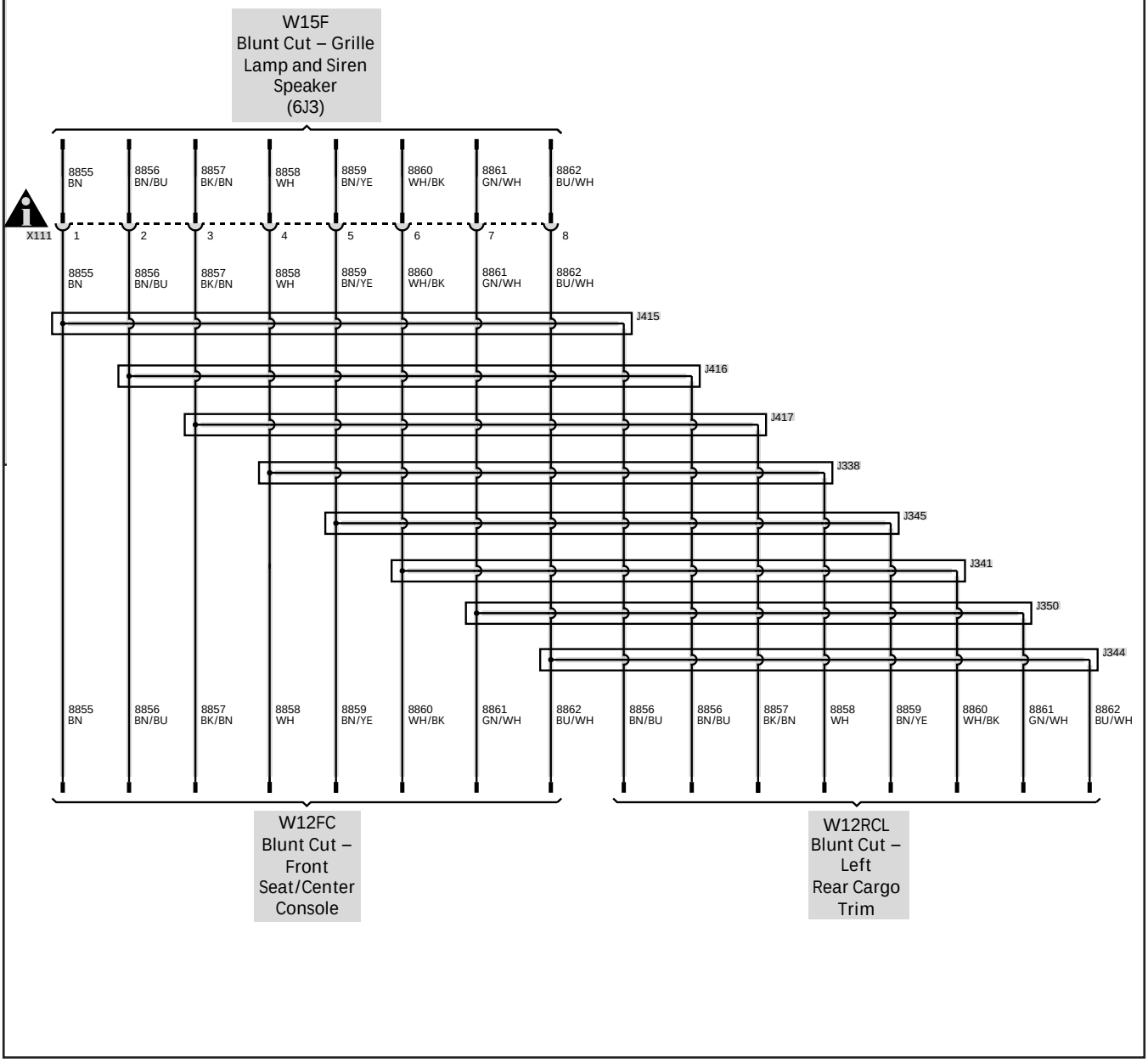

OPTIONAL WIRING

WX7 FRONT DOOR SPEAKERS PROVISIONS

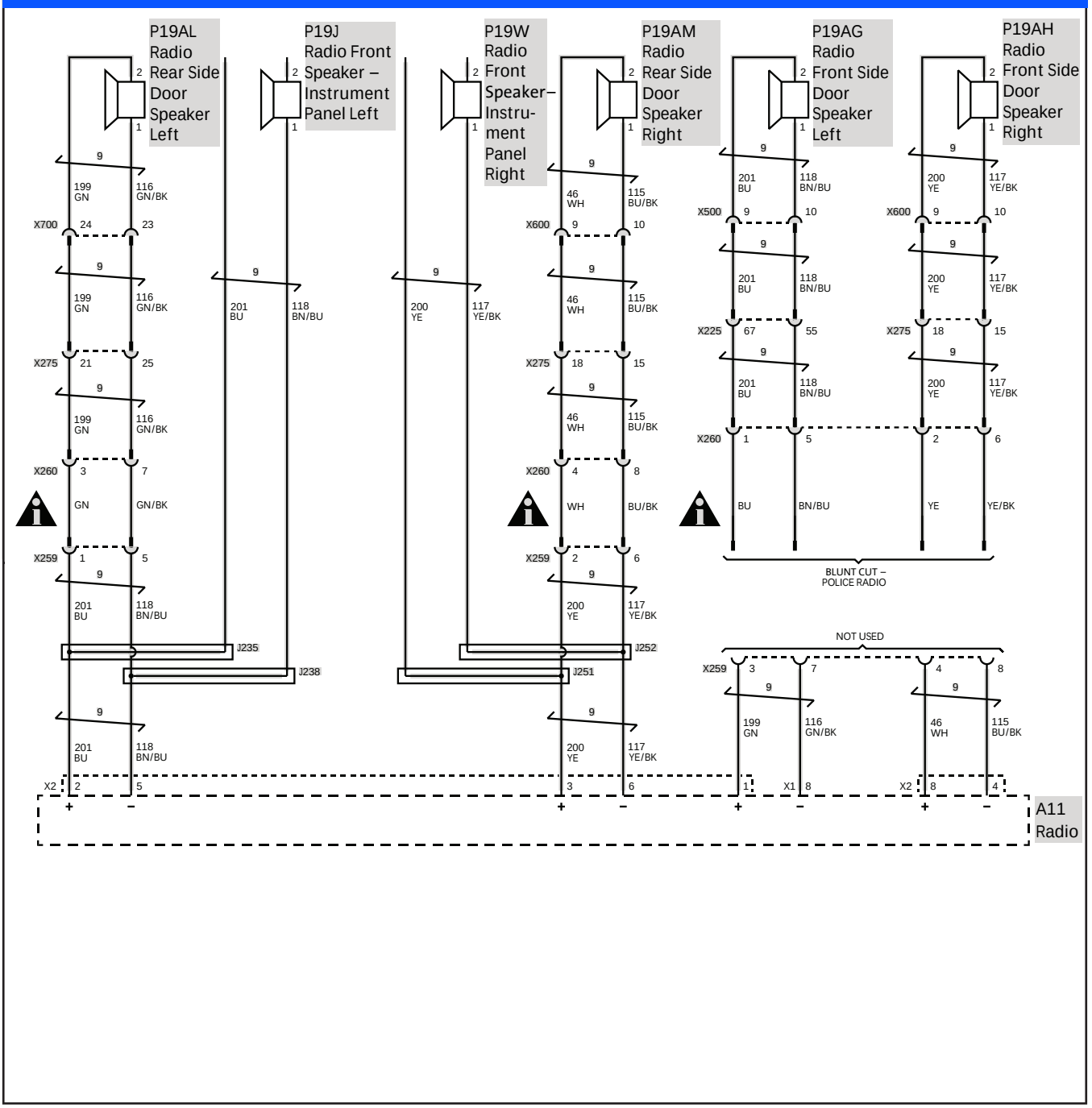

OPTIONAL WIRING

6J4 - HORN AND SIREN CONTROL PROVISION

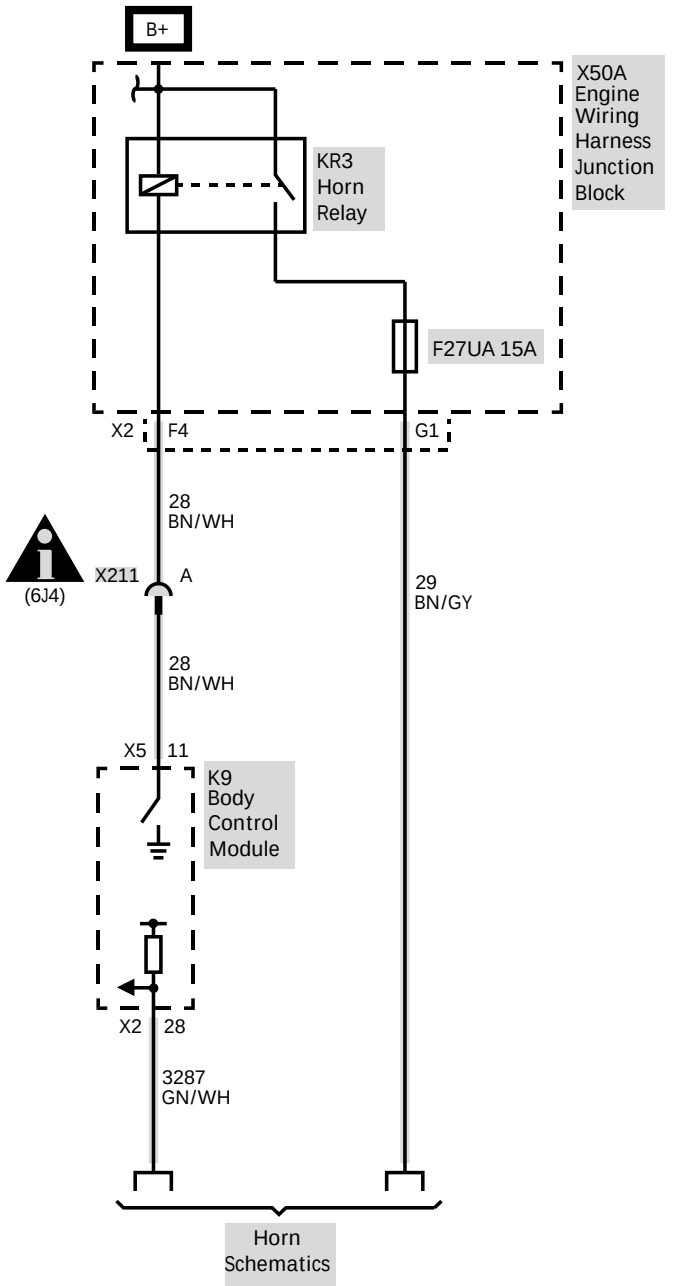

OPTIONAL WIRING

T53 – LIFTGATE WARNING LAMPS

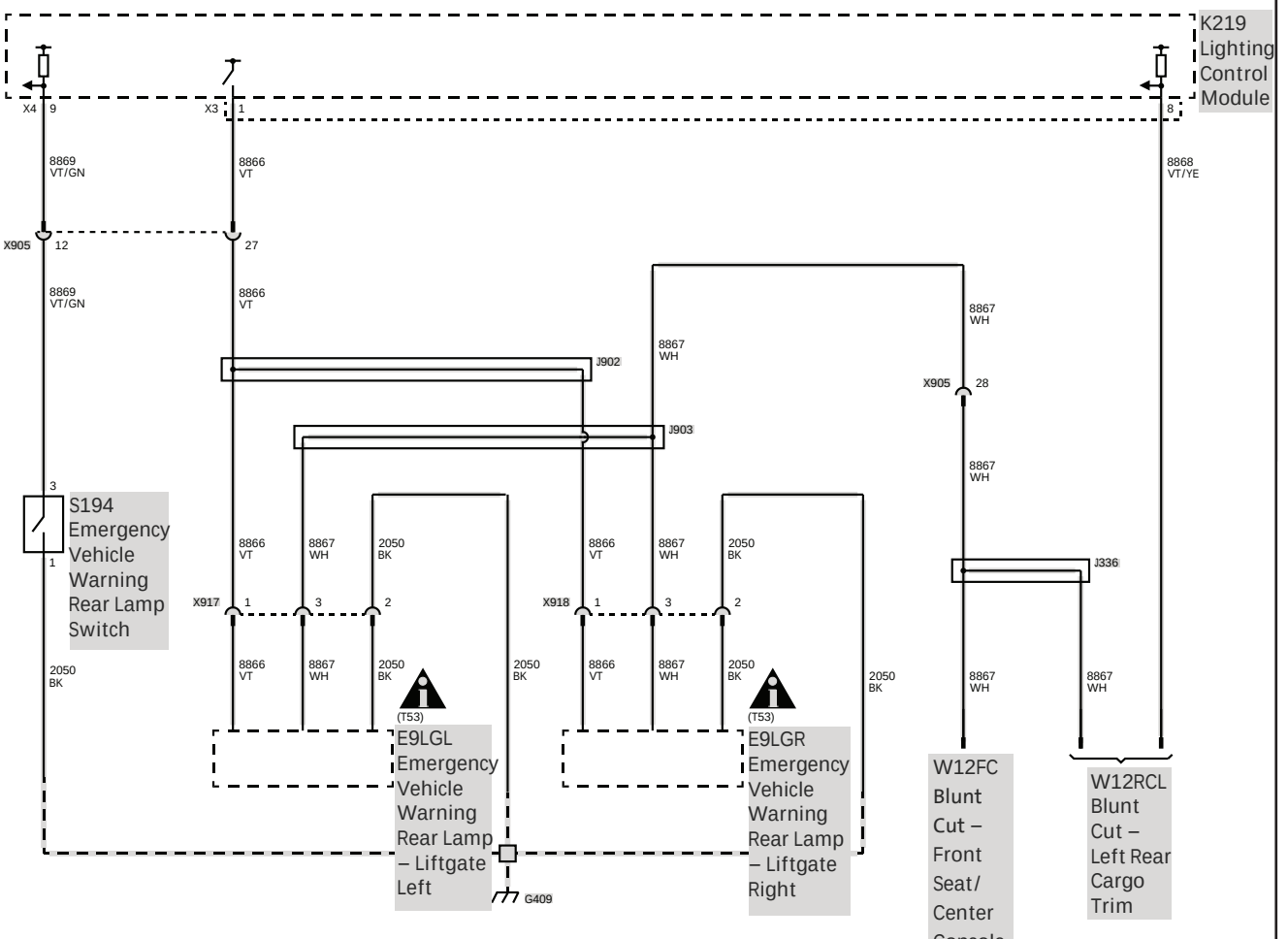

OPTIONAL WIRING

7X2-7X3 LED SPOT LAMPS

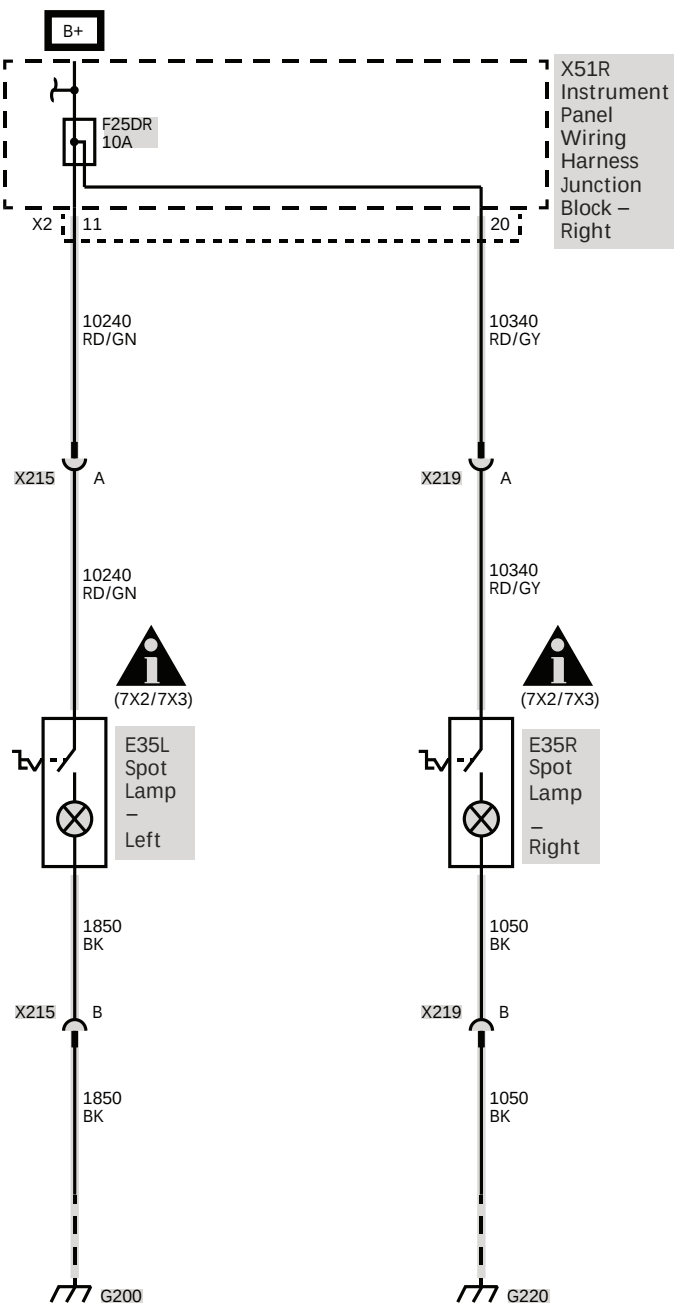

6C7 AUXILIARY DOME LAMP

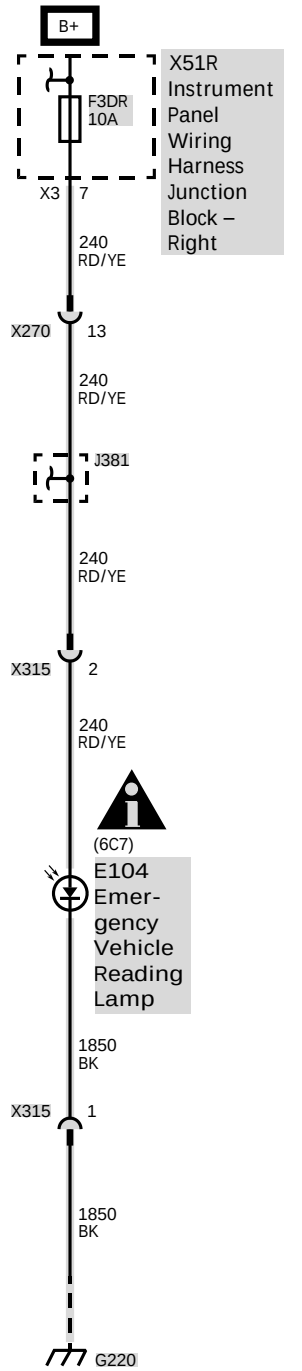

VEHICLE LOAD LIMITS

This information is intended for those who intend to install additional equipment on the police vehicle after it has left the factory, and for those who will be driving and loading the vehicle with passengers and/or cargo.
Two labels on your vehicle show how much weight it was designed to carry, the Tire and Loading Information label and the Certification/Tire label. These labels are attached to your vehicle and give you the maximum load capacity, the Gross Vehicle Weight Rating (GVWR) and the Gross Axle Weight Rating (GAWR) for your vehicle.
See "Vehicle Load Limits" in the owner manual Index for additional loading information.

The following guidelines can help you with proper loading and load distribution when installing additional equipment on the Tahoe Special Service Package.

WARNING

DO NOT LOAD THE VEHICLE ANY HEAVIER THAN THE GROSS VEHICLE WEIGHT RATING (GVWR), OR EITHER THE MAXIMUM FRONT OR REAR GROSS AXLE WEIGHT RATING (GAWR). THIS CAN CAUSE SYSTEMS TO BREAK AND CHANGE THE WAY THE VEHICLE HANDLES. THIS COULD CAUSE LOSS OF CONTROL AND A CRASH. OVERLOADING CAN ALSO SHORTEN THE LIFE OF THE VEHICLE.

ADDING EQUIPMENT TO YOUR VEHICLE

Before adding accessories or equipment to your police vehicle, there are some things you need to know

- The police vehicle's maximum capacity weight (payload). The weight of your police vehicle, including a full tank of fuel but without a driver and passengers.
- The weight of items you plan on adding to your police vehicle, like roof mounted light bar(s), push bumpers, security barrier(s), rear storage organizer, highway flares, fire extinguishers, weapons, ammunition, radios, and video equipment.
- The weight and number of passengers you intend to carry in your vehicle.
- The total weight of any additional cargo you intend to carry in your vehicle.

When planning your vehicle equipment installation remember not to exceed the Gross Vehicle Weight Rating (GVWR) or the Gross Axle Weight Rating (GAWR) of the front or rear axles. To keep the available load weight less than the vehicle capacity weight, you may need to limit the number of passengers you carry in your vehicle or change your choice of additional equipment. Towing a trailer may change the vehicle payload capacity.

CENTER OF GRAVITY (CG)

A vehicle's center of gravity is an imaginary location inside the vehicle and is a balance point for the vehicle mass as it moves down the road. The police vehicle's center of gravity, before you add a load and passengers, is approximately midway between the center of the axles, up from the ground to just below the front window, and between the driver and passenger. Equipment location and weight on the vehicle's center of gravity is important to keep in mind when planning an installation. Heavy equipment should be positioned as low and as far forward in the rear load compartment as possible. Try to mount the equipment below the bottom of the side windows. Refer to the Loading Zone chart and diagram to help with your installation plan.

A procedure to make the necessary measurements and formulas to calculate the vehicle longitudinal, lateral and vertical position of the center of gravity can be found in the GM Coach Builder's Manual. Equipment required to conduct the measurements for calculating the center of gravity are:

- Weight scales of sufficient capacity to measure the vehicle weight at each wheel.
- A post type hoist or other means to safely elevate the front of the vehicle to at least an angle of 20 degrees above horizontal.

See your GM dealer to get more information about this coach builder procedure.

Keeping the center of gravity midway between the axles is also important to provide proper braking performance. About half the total vehicle weight on each axle is recommended.

Weigh your vehicle after the additional equipment has been installed to determine the actual weight of your vehicle.

Weigh the vehicle with a full tank of fuel and without passengers. You may need to put a limit on how many people or other equipment you can carry inside your vehicle after the additional equipment has been installed.

Note: See loading zone weight chart and diagram

LOADING ZONES

LOADING ZONES FOR CUSTOMER INSTALLED EQUIPMENT AND CARGO WITH SIX OCCUPANTS

REFER TO YOUR VEHICLE TIRE PLACARD FOR VEHICLE SEATING CAPACITY AND PAYLOAD CAPACITY (OCCUPANTS + CARGO)

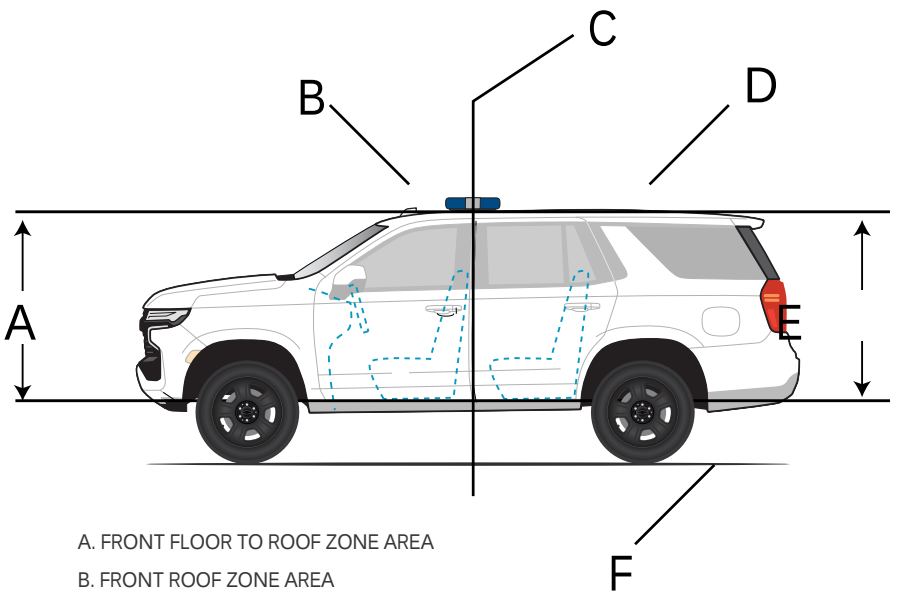

A. FRONT FLOOR TO ROOF ZONE AREA
B. FRONT ROOF ZONE AREA
C. BACK OF FRONT DOOR
D. REAR ROOF ZONE AREA
E. REAR FLOOR TO ROOF ZONE AREA
F. GROUND

LOADING ZONE WEIGHT CHART TAHOE POLICE PACKAGE 2WD 9C1

LOADING ZONES	FRONT AXLE WEIGHT	REAR AXLE WEIGHT	TOTAL
ROOF	34 LBS (15 KG)	47 LBS (21 KG)	81 LBS (36 KG)
FLOOR TO ROOF	125 LBS (57 KG)	494 LBS (224 KG)	619 LBS (281 KG)
TOTAL	159 LBS (72 KG)	541 LBS (245 KG)	700 LBS (317 KG)

LOADING ZONE WEIGHT CHART TAHOE POLICE PACKAGE 4WD 9C1

LOADING ZONES	FRONT AXLE WEIGHT	REAR AXLE WEIGHT	TOTAL
ROOF	34 LBS (15 KG)	47 LBS (21 KG)	81 LBS (36 KG)
FLOOR TO ROOF	125 LBS (57 KG)	494 LBS (224 KG)	619 LBS (281 KG)
TOTAL	159 LBS (72 KG)	541 LBS (245 KG)	700 LBS (317 KG)

NOTE:

CARGO WEIGHT CAN BE GREATER WITH FEWER OCCUPANTS. TOWING A TRAILER MAY CHANGE VEHICLE PAYLOAD.
REFER TO YOUR OWNER'S MANUAL SUPPLEMENT FOR DETERMINING MAXIMUM CARGO LOADING AND POSITIONING.

USING HEAVIER SUSPENSION COMPONENTS TO GET ADDED DURABILITY MIGHT NOT CHANGE YOUR WEIGHT RATINGS AND MAY AFFECT THE VEHICLE PERFORMANCE AND HANDLING CHARACTERISTICS.

HIGH SPEED OPERATIONS SHOULD NOT BE ATTEMPTED WITH AN IMPROPERLY OR OVERLOADED VEHICLE OR WHILE TOWING A TRAILER.

YOUR GM DEALER CAN PROVIDE HELP WITH PROPERLY LOADING YOUR VEHICLE. .

AIRBAGS

TAHOE HEAD-CURTAIN AND FRONT SEAT SIDE IMPACT AIRBAGS

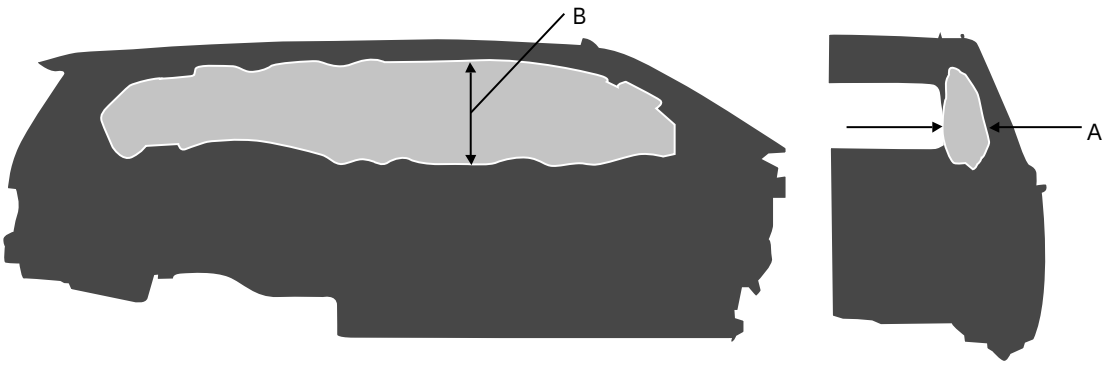

SIDE VIEW FRONT VIEW

HEAD CURTAIN AIRBAG

A. AIRBAG WIDTH 10.6IN / 270MM

B. AIRBAG HEIGHT 19.7 IN / 500MM

DRIVER SIDE SHOWN - PASSENGER SIDE SIMILAR

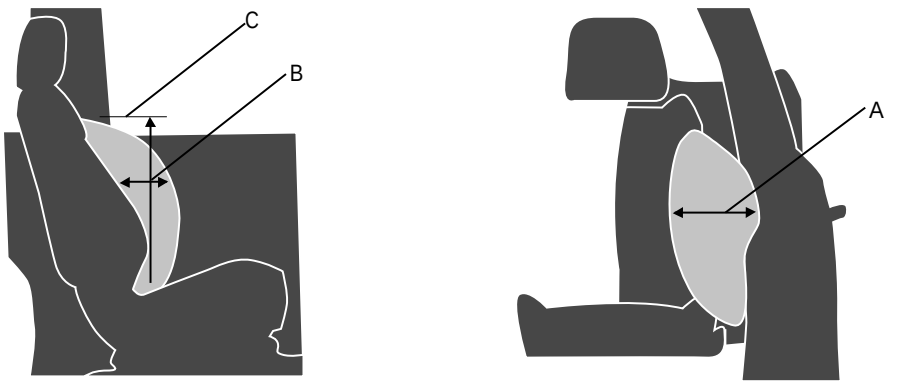

SIDE VIEW FRONT VIEW

FRONT SEAT SIDE IMPACT AIRBAG

A. AIRBAG WIDTH 7.9IN / 201MM

B. SEAT & AIRBAG FORWARD TRAVEL 6.6IN / 167MM

C. AIRBAG HEIGHT 19.7IN / 500MM

DRIVER SEAT SHOWN - PASSENGER SIDE SIMILAR

Sitting too close to an airbag when it deploys can increase the risk of serious injury or death. Always properly wear your seat belt. See Owner's Manual for more information.

AIRBAGS

TAHOE FRONTAL AIRBAGS

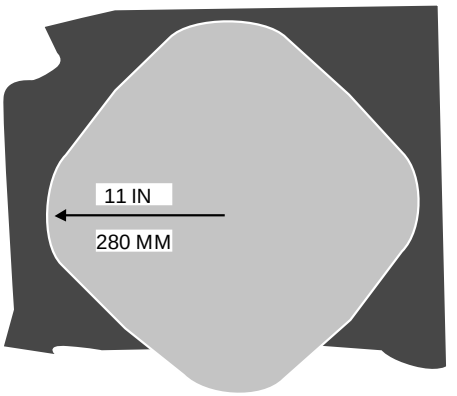

STEERING WHEEL
DRIVER AIRBAG
VIEW FROM DRIVER SEAT

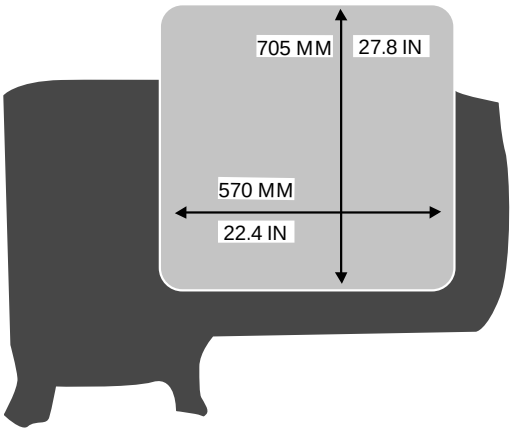

FRONT OUTBOARD
PASSENGER AIRBAG
VIEW FROM PASSENGER SEAT

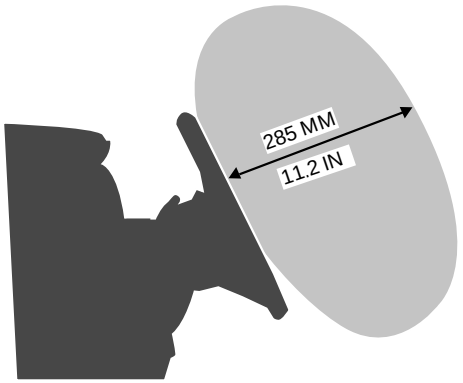

STEERING WHEEL
DRIVER AIRBAG
VIEW FROM DRIVER SIDE

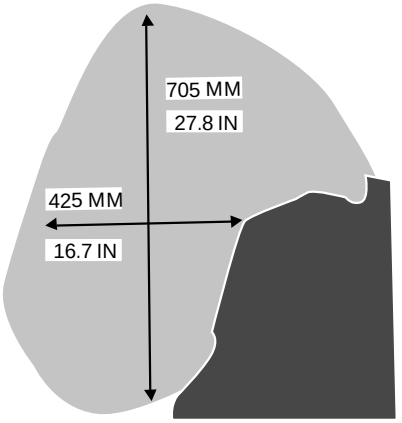

FRONT OUTBOARD
PASSENGER AIRBAG
VIEW FROM PASSENGER SIDE

Sitting too close to an airbag when it deploys can increase the risk of serious injury or death. Always properly wear your seat belt. See Owner's Manual for more information.

AIRBAGS FAQ

Q: Can equipment such as radar devices, video cameras, and radio trees be mounted in a specialty vehicle equipped with a right front passenger frontal airbag?

A: Yes, but care must be taken to properly mount the equipment outside of the airbag "deployment zone."

Q: What is the airbag "deployment zone"?

A: The term "deployment zone" describes the space an airbag takes up when fully inflated. Airbags need room to work properly, and anything in the “deployment zone" – such as improperly mounted equipment – can greatly affect the performance of the airbag.

Q: How can I identify the airbag "deployment zone" in my vehicle?

A: See Airbag Deployment Diagrams for more information. The diagrams provide the approximate dimensions of the "deployment zones" for your specialty vehicle. Before doing any service work, including the installation of any equipment, consult the appropriate service manual.

Q: Is it possible to shield equipment so it does not interfere with airbag deployment?

A: While shielding may protect certain equipment from being damaged or dislodged, it may also negatively affect how an airbag inflates. Therefore, we do not recommend the placement of any equipment in the deployment zone, even if shielded.

Q: Can the installation of push bumpers on the front end of the vehicle affect the deployment of the airbag?

A: It is not likely that installing push bumpers will affect deployment for the airbag as long as the vehicle structure itself is not modified. GM is not aware of any adverse defects effect on the deployment of the front airbags due to use of many aftermarket push bumpers installed on current GM police vehicles.

See "Adding Equipment to the Airbag-Equipped Vehicle" in the owner manual for more information.

Customer-Installed Equipment

Before installing equipment, read the following.

- Airbags inflate with great force, faster than the blink of an eye. No objects, such as shotguns, should be placed over or near the airbag covers. Equipment mounted too close to an inflating airbag could prevent the airbag from operating properly to protect the occupants or could be forced into an occupant or break and become a dangerous projectile, causing severe injury or even death. To help prevent injury and to allow the airbag to perform as it was designed, do not mount equipment inside the airbag deployment zones.
- Do not attach anything to the steering wheel hub or mount any equipment within the deployment zone for the driver airbag.
- Do not mount equipment on the passenger side of the instrument panel top pad deployment zone. Equipment should not be mounted on or around the passenger airbag opening because of a deploying airbag. To allow the airbag to perform as it was designed, do not mount equipment inside the airbag deployment zone.
- Do not mount a security barrier such that the ends of the barrier or brackets are within the roof-rail airbag deployment zones.
- Avoid installing wiring for roof-rail emergency lighting or radio antennas that may restrict the proper deployment of the roof-rail airbags.
- GM approved service procedures must be followed to remove and reinstall the instrument panel to the pad to ensure proper airbag deployment.

ONSTAR OPTIONS

P0U	ONSTAR PROTECT[1] - 12 MONTHS OF SERVICE
P0J	ONSTAR PROTECT[1] - 24 MONTHS OF SERVICE
P0K	ONSTAR PROTECT[1] - 36 MONTHS OF SERVICE
P0L	ONSTAR PROTECT[1] - 48 MONTHS OF SERVICE
P0Q	ONSTAR PROTECT[1] - 60 MONTHS OF SERVICE
R8G	ONSTAR ONE FLEET[2] - 12 MONTHS OF SERVICE
RFH	ONSTAR ONE FLEET[2] - 24 MONTHS OF SERVICE
R8P	ONSTAR ONE FLEET[2] - 36 MONTHS OF SERVICE
R8Z	ONSTAR ONE FLEET[2] - 48 MONTHS OF SERVICE
R8W	ONSTAR ONE FLEET[2] - 60 MONTHS OF SERVICE
PR8	ONSTAR ONE FLEET[2] - 84 MONTHS OF SERVICE
P0V	ONSTAR TELEMATICS[3] - 12 MONTHS OF SERVICE
P0W	ONSTAR TELEMATICS[3] - 24 MONTHS OF SERVICE
P0X	ONSTAR TELEMATICS[3] - 36 MONTHS OF SERVICE
P0Y	ONSTAR TELEMATICS[3] - 48 MONTHS OF SERVICE
P0Z	ONSTAR TELEMATICS[3] - 60 MONTHS OF SERVICE
P0H	ONSTAR CONNECT PLUS[4] - 12 MONTHS OF SERVICE
P0I	ONSTAR CONNECT PLUS[4] - 24 MONTHS OF SERVICE
PQG	ONSTAR CONNECT PLUS[4] - 36 MONTHS OF SERVICE
PQH	ONSTAR CONNECT PLUS[4] - 48 MONTHS OF SERVICE
PQI	ONSTAR CONNECT PLUS[4] - 60 MONTHS OF SERVICE

1. Emergency Advisors and security services. Working electrical system, cell reception and GPS signal required. OnStar links to emergency services. Service coverage varies with conditions and location. Service availability, features and functionality vary by device and software version. See **gmfleet.com/software/onstar** for details and limitations. Nontransferable and non-refundable. Requires (UE1) OnStar. Requires one of the following US Fleet or Government order types: FLS, FNR, FRC, FBC, FGO or FEF. Not available with any other of the OnStar Protect or OnStar One Fleet options listed. Not available with a ship-to of Guam, Puerto Rico or the Virgin Islands.
2. Includes safety, telematics, Wi-Fi hotspot, and streaming services. Working electrical system, cell reception and GPS signal required. OnStar links to emergency services. Service coverage varies with conditions and location. Service availability, features and functionality vary by device and software version. Requires eligible vehicle. Streaming services vary with conditions and location. Terms apply. See **gmfleet.com/software/onstar** for details and limitations. Non-transferable and non-refundable. Requires (UE1) OnStar and (VV4) Wi-Fi Hotspot capable. Requires one of the following US Fleet or Government order types: FLS, FNR, FRC, FBC, FGO or FEF. Not available with any other of the OnStar options listed. Not available with a ship-to of Guam, Puerto Rico or the Virgin Islands.
3. Provides actionable insights to help optimize your fleet's operations and allow remote vehicle management. OnStar Telematics does not include emergency or security services. Eligible customers must sign up for an account at **gmfleet.com/software/onstar/telematics** in order to take advantage of this offer. Active connected vehicle services, working electrical system, cell reception and GPS signal required. Service coverage varies with conditions and location. Service availability, features and functionality vary by device and software version. See **gmfleet.com/software/onstar** for details and limitations. Nontransferable and non-refundable. Requires (UE1) OnStar. Requires one of the following US Fleet or Government order types: FLS, FNR, FRC, FBC, FGO or FEF. Not available with any other of the OnStar Telematics or OnStar One Fleet options listed. Not available with a ship-to of Guam, Puerto Rico or the Virgin Islands.
4. In-vehicle entertainment and productivity through access to a suite of apps in your center display including media streaming, navigation, voice assistance, and Wi-Fi hotspot. OnStar Connect Plus does not include emergency or security services. Requires eligible vehicle. Streaming services vary with conditions and location. HD Streaming services are subject to terms and limitations. Availability may vary by vehicle, infotainment system, location and active service plan. Hulu service requires subscription. U.S. only. Terms apply. Hulu and Hulu logo are registered trademarks of Hulu, LLC. See **gmfleet.com/software/onstar** for additional details and limitations. Non-transferable and non-refundable. Requires (UE1) OnStar and (VV4) Wi-Fi Hotspot capable. Requires one of the following US Fleet or Government order types: FLS, FNR, FRC, FBC, FGO or FEF. Not available with any other of the OnStar Connect Plus or OnStar One Fleet options listed. Not available with a ship-to of Guam, Puerto Rico or the Virgin Islands.

MAINTENANCE / LIMITED WARRANTY

SCHEDULED MAINTENANCE	One visit within first year of vehicle delivery[1]
BUMPER-TO-BUMPER LIMITED WARRANTY	3 years/36,000 miles[2] Bumper-to-Bumper Limited Warranty with no deductible
TRANSFERABLE POWERTRAIN LIMITED WARRANTY	5 Years / 100,000 Miles[2]
TIRES	3 years/36,000 miles[2] ;coverage prorated after 12,000 miles[3]
ROADSIDE ASSISTANCE AND COURTESY TRANSPORTATION	Qualified Fleet Customers: 5 years/100,000 miles[3]
RUST-THROUGH	6 years/100,000 miles[2]
CORROSION	3 years/ 36,000 miles[2]
WHEEL ALIGNMENT AND BALANCE	Up to 7,500 miles[4]
RESTRAINT SYSTEM	6 years/72,000 miles[2]

1. Includes first required maintenance visit as stated in vehicle maintenance schedule. Maintenance visit consists of oil change, tire rotation and Multi-Point Vehicle Inspection. Does not include air filters. See participating dealer for other restrictions and complete details.
2. Whichever comes first. See dealer for limited warranty details. A Qualified Fleet User is defined as a company that has purchased and registered or leased five (5) or more new cars/or trucks solely for use in its operation during the current or preceding calendar year, model year, or preceding twelve (12) month period, or that owns or leases fifteen (15) or more cars and trucks. Excludes rental customers. See dealer for details
3. Tires also covered under the Bumper-to-Bumper Warranty but are prorated based upon mileage. See dealer for warranty details. If the vehicle has a warrant-able failure, see your Owner's Manual for full details on the Courtesy Transportation program.
4. Customer maintenance item after 7,500 miles.

UPFITTER INTEGRATION LINKS

GM upfitter Integration Technical Bulletins are intended for use by professional technicians, NOT a do-it-yourselfer. They are written to inform these technicians of conditions that may occur on some vehicles, or to provide information that could assist in the proper service and/or modification of a vehicle. These properly trained technicians have the equipment, tools, safety in - structions and know-how to do a job properly and safely. If a condition is described, DO NOT assume that the bulletin applies to your vehicle or that your vehicle will have that condition. Contact GM Upfitter Integration or information on whether the in- formation is applicable to your vehicle.

GM LINKS QUICK LINKS

GM FLEET GUIDE - https://www.gmfleet.com/resources/guides-and-manuals

CHEVROLET COMMERCIAL VEHICLES - https://www.chevrolet.com/commercial

ONLINE ORDER GUIDES - Online Order / Reference Guide is intended solely for reference purposes only. Certain models, options or equipment may be available only to customers who qualify as fleet or commercial customers.
https://www.gmfleetorderguide.com/map

UNIVERSAL VEHICLE MODULE (KGU) -
https://www.gmupfitter.com/wp-content/uploads/2025/02/UI-Bulletin_203-b-UVM-1.pdf

OWNER SERVICE MANUALS - For Manuals and CD ROMS: Factory Repair Manuals, Owner Manuals, ETMs, Wiring Dia- grams, Body Repair Manuals, Collision Books, TSBs.
https://experience.gm.com/certified-service?evar25=xbhub_globalnav_service

SVM LOCATOR - General Motors Special Vehicle Manufacturers provide quality upfit products that enhance GM trucks and vans. SVMs are selected on the merit of their upfit/conversion, financial stability, and adherence to the governmen- tal and trade association requirements.
https://www.gmfleet.com/vehicles/specialty-vehicles-manufacturer-locator/more

GM UPFITTER INTEGRATION - QUICK LINKS (NON-GM LINKS)

The following links will launch you to an independent website outside of General Motors, which has its own privacy policies;
INTERNATIONAL FLEET SALES - International Fleet Sales (IFS) is the authorized export distributor of General Motors vehicles, parts and service.
http://www.internationalfleetsales.com/

AC DELCO TECHCONNECT - Comprehensive coverage, product quality, competitive prices, and industry-leading training make the AC Delco All Makes, All Models product line a true winner and a must-have for Independent Service Centers.
https://www.acdelcotds.com/subscriptions

FIRST RESPONDERS - Here you will find information to assist First Responders in learning about vehicles and/or systems that may affect how they perform in an emergency situation.
https://www.gmstc.com/index.php/first-responders

TRAINING - Here you will find information on how to obtain GM Technical Training for Dealers, Fleet Customers and Non GM dealers. https://www.gmupfitter.com/wp-content/uploads/2023/09/Training.pdf

NATIONAL TRUCK EQUIPMENT ASSOCIATION (NTEA) - Supportive information such as FMVSS Guide, Weight Calculators and OEM Chassis Considerations Guide and more.
https://www.ntea.com/technicalresources

GM reserves the right to make changes at any time, without notice, in prices, colors, materials, equipment, specifications, models, and availability. Specifications, dimensions, measurements, ratings, and other numbers in this catalog and other printed materials provided at the dealership or affixed to vehicles are approximates based upon design and engineering drawings and prototypes and laboratory tests. Your vehicle may differ due to variations in manufacture and equipment. Since some information may have been updated since the time of printing, please check with your GM dealer for complete details. Some of the equipment shown or described throughout this publication may be available at extra cost, and/or is supplied by an independent supplier.

Copyright 2026 General Motors. All rights reserved. All text, images, graphics, and other materials in this publication are subject to the copyright and other intellectual property rights of General Motors. These materials may not be reproduced, distributed, or modified without the express written permission of General Motors. The marks appearing in this publication including, but not limited to: GM and the GM logo; Chevrolet and their respective logos, emblems, slogans, and vehicle model names and body designs; and other marks such as GM FLEET and Commercial are trademarks and/or service marks of General Motors, its subsidiaries, affiliates, or licensors.

For more detailed information, contact your District Sales Manager or see: https://www.gmfleet.com