Table of Contents

General Information **0-1**
General Information 0-2
Body Systems **1-1**
Fixed and Moveable Windows 1-4
Horns and Pedestrian Alerts 1-40
Lighting 1-43
Mirrors 1-76
Trailering Systems 1-92
Vehicle Access 1-95
Wipers and Washers 1-160
Driver Information and Entertainment **2-1**
Cellular, Entertainment, and Navigation 2-2
Displays and Gauges 2-28
Image Display Cameras 2-37
Engine/Propulsion **3-1**
Starting, Charging, and Low Voltage Energy Storage 3-2
HVAC **4-1**
HVAC - Manual 4-2
Power and Signal Distribution **5-1**
Data Communications 5-2
Electrical Component and Inline Harness Connector End Views 5-16
Electrical Component Locator and Harness Routing Views 5-332
Wiring Systems and Power Management 5-429
Safety and Security **6-1**
Immobilizer 6-3
Remote Functions 6-6
Seat Belts 6-9
Supplemental Restraints 6-35
Transmission **7-1**
Shift Lock Control 7-2

Section 0

General Information

General Information **0-2**
Introduction **0-2**
Vehicle, Engine and Transmission ID and VIN Location, Derivative and Usage (GMC) 0-2
Vehicle, Engine and Transmission ID and VIN Location, Derivative and Usage (Chevrolet) 0-4
Vehicle Certification, Tire Placard, and Anti-Theft Label 0-6
RPO Code List 0-7

General Information

General Information

Introduction

Vehicle, Engine and Transmission ID and VIN Location, Derivative and Usage (GMC)

5138041

The VIN plate (1) is the legal identifier of the vehicle. The VIN plate is located on the upper left corner of the instrument panel (I/P) and can be seen through the windshield from the outside of the vehicle:

Vehicle Identification Number (VIN) System

Position	Definition	Character	Description
1	Region of Build	1	United States
		7	United States
2	Manufacturer	G	General Motors
		G	Navistar Inc. (7GZ Only)
3	Vehicle Brand/Type	D	GMC Incomplete Truck
		J	GMC Bus (Non School Bus)
		T	GMC Truck
		Z	GMC Incomplete Truck (Navistar Only)
4	GVWR/Brake System/Body Style	W	8,001–9,000 lbs/Hydraulic/CargoVan/Four Door Cab/ Utility or Passenger Van

Position	Definition	Character	Description
		Y	8,001–9,000 lbs/Hydraulic/Commercial Special Cutaway, Two Door Cab pick-up or Motor Home Chassis
		Z	9,001–10,000 lbs/Hydraulic/CargoVan/Four Door Cab/ Utility or Passenger Van
		0	9,001–10,000 lbs/Hydraulic/Commercial Special Cutaway, Two Door Cab pick-up or Motor Home Chassis
		3	10,001–14,000 lbs/Hydraulic/Commercial Special Cutaway, Two Door Cab pick-up or Motor Home Chassis
		6	14,001–16,000 lbs/Hydraulic/Commercial Special Cutaway, Two Door Cab pick-up or Motor Home Chassis
5–6	Chassis/Series	7/A	GMC Savana, 2500 Cargo
		7/B	GMC Savana, 2500 Cargo EXT
		7/E	GMC Savana, 2500 Passenger LS
		7/F	GMC Savana, 2500 Passenger LT
		7/G	GMC Savana, 3500 Cargo
		7/H	GMC Savana, 3500 Cargo EXT
		7/L	GMC Savana, 3500 Passenger LS
		7/M	GMC Savana, 3500 Passenger LT
		7/N	GMC Savana, 3500 Passenger LS EXT
		7/P	GMC Savana, 3500 Passenger LT EXT
		7/R	GMC Savana, 3500 Cutaway 139" Wheelbase
		7/S	GMC Savana, 3500 Cutaway 159" Wheelbase
		7/U	GMC Savana, 4500 Cutaway 159" Wheelbase
		7/9	GMC Savana (Non-US, Non-Canada)
7	Restraint System	B	AJ3 − Active Manual Belts, Airbag − Driver only − Front
		C	AK5 − Active Manual Belts, Airbag – Driver and Passenger – Front (1st row)
		F	AK5 & ASF − Active Manual Belts, Airbags - Driver & Passenger - Front (1st row), Front Seat Side (1st row), Roof Side (All seating rows for vehicles with 3 or fewer seating rows; 1st, 2nd and 3rd row for vehicles with 4 or more seating rows)
		H	AJ3 & ASF — Active Manual belts, Airbag - Driver only - Front, Front Seat Side (1st row), Roof Side (All seating rows for vehicles with 3 or fewer seating rows; 1st, 2nd and 3rd row for vehicles with 4 or more seating rows)
8	Engine Type	P	RPO LV1 – Engine Gas, 6 CYL, 4.3L, SIDI, V6, VVT, E85 MAX, Iron
		7	L8T - ENGINE GAS, 8 CYL, 6.6L, SIDI, VVT, CAST IRON
9	Check Digit	—	Check Digit
10	Model Year	V	2027
11	Plant Location	1	Wentzville
12–17	Plant Sequence Number	—	Plant Sequence Number

4.3L RPO LV1 Engine ID and VIN Derivative Location

[Link target (target-id 226538-) not found]

6.6L RPO L8T Engine ID and VIN Derivative Location

[Link target (target-id 225900-) not found]

8L80/8L90 Transmission ID and VIN Derivative Location

[Link target (target-id 260620-) not found]

Vehicle, Engine and Transmission ID and VIN Location, Derivative and Usage (Chevrolet)

5138041

The VIN plate (1) is the legal identifier of the vehicle. The VIN plate is located on the upper left corner of the instrument panel (I/P) and can be seen through the windshield from the outside of the vehicle:

Vehicle Identification Number (VIN) System

Position	Definition	Character	Description
1	Region of Build	1	United States
2	Manufacturer	G	General Motors
3	Vehicle Brand/Type	A	Chevrolet Bus (Non School Bus)
		B	Chevrolet Incomplete Truck
		C	Chevrolet Truck
4	GVWR/Brake System/Body Style	W	8,001–9,000 lbs/Hydraulic/Cargo Van/Four Door Cab/ Utility or Passenger Van
		Y	8,001–9,000 lbs/Hydraulic/Commercial Special Cutaway, Two Door Cab pick-up or Motor Home Chassis
		Z	9,001–10,000 lbs/Hydraulic/Cargo Van/Four Door Cab/ Utility or Passenger Van

Position	Definition	Character	Description
		0	9,001–10,000 lbs/Hydraulic/Commercial Special Cutaway, Two Door Cab pick-up or Motor Home Chassis
		3	10,001–14,000 lbs/HydraulicCommercial Special Cutaway, Two Door Cab pick-up or Motor Home Chassis
		6	14,001–16,000 lbs/Hydraulic/Commercial Special Cutaway, Two Door Cab pick-up or Motor Home Chassis
5–6	Chassis/Series	G/A	Chevrolet Express, 2500 Cargo
		G/B	Chevrolet Express, 2500 Cargo EXT
		G/E	Chevrolet Express, 2500 Passenger LS
		G/F	Chevrolet Express, 2500 Passenger LT
		G/G	Chevrolet Express, 3500 Cargo
		G/H	Chevrolet Express, 3500 Cargo EXT
		G/L	Chevrolet Express, 3500 Passenger LS
		G/M	Chevrolet Express, 3500 Passenger LT
		G/N	Chevrolet Express, 3500 Passenger LS EXT
		G/P	Chevrolet Express, 3500 Passenger LT EXT
		G/R	Chevrolet Express, 3500 Cutaway 139" Wheelbase
		G/S	Chevrolet Express, 3500 Cutaway 159" Wheelbase
		G/T	4x2, Chevrolet Express, 3500 Cutaway 177" Wheelbase
		G/9	Chevrolet Express (Non-US, Non-Canada)
7	Restraint System	B	AJ3 − Active Manual Belts, Airbag − Driver only − Front
		C	AK5 − Active Manual Belts, Airbag-Driver & Passenger-Front – Front (1st row)
		F	AK5 & ASF − Active Manual Belts, Airbags - Driver & Passenger - Front (1st row), Front Seat Side (1st row), Roof Side (All seating rows for vehicles with 3 or fewer seating rows; 1st, 2nd and 3rd row for vehicles with 4 or more seating rows)
		H	AJ3 & ASF - Active Manual Belts, Airbag - Driver only - Front, Front Seat Side (1st row), Roof Side (All seating rows for vehicles with 3 or fewer seating rows; 1st, 2nd and 3rd row for vehicles with 4 or more seating rows)
8	Engine Type	P	RPO LV1 – Engine Gas, 6 CYL, 4.3L, SIDI, V6, VVT, E85 MAX, Iron
		7	L8T - ENGINE GAS, 8 CYL, 6.6L, SIDI, VVT, CAST IRON
9	Check Digit	—	Check Digit
10	Model Year	V	2027
11	Plant Location	1	Wentzville
12–17	Plant Sequence Number	—	Plant Sequence Number

4.3L RPO LV1 Engine ID and VIN Derivative Location

[Link target (target-id 226538-) not found]

6.6L RPO L8T Engine ID and VIN Derivative Location

[Link target (target-id 225900-) not found]

8L80/8L90 Transmission ID and VIN Derivative Location

[Link target (target-id 260620-) not found]

Vehicle Certification, Tire Placard, and Anti-Theft Label

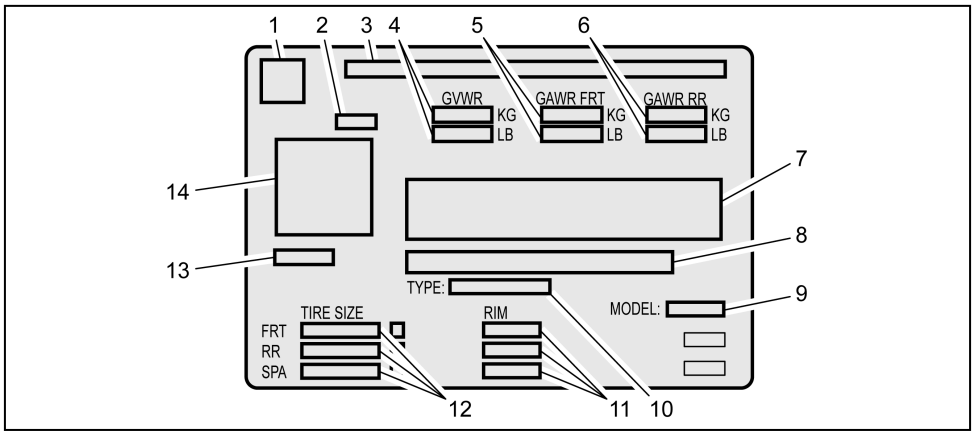

4992823

Vehicle Certification Label

Callout	Description
A vehicle-specific Certification label is attached to the vehicle's center pillar (B-pillar) and displays the following assessments:	
1	Logo
2	Final Date of Manufacture (Month and Year MM/YY) Date of manufacture is to reflect the date that the vehicle is counted as built. In those cases where a replacement label is needed, the replacement label should reflect the actual build date not the date of replacement.
3	Name of Manufacturer
4	Maximum Gross Vehicle Weight Rating (GVWR)
5	Maximum Gross Axle Weight Rating (GAWR) - Front
6	Maximum Gross Axle Weight Rating (GAWR) - Rear
7	Certification Statement
8	Vehicle Identification Number (VIN)
9	Engineering Model Number
10	Vehicle Class Type (Pass Car, etc.)
11	Original Equipment Rim Size
12	Original Equipment Tire Size
13	Paint Code
14	QR Code Once the QR code is scanned, the information will appear in this order on your smartphone or laptop: VIN, Model Year, Model, Build Month, Year, Engineering Book, Vehicle Order Number, 3 Digit RPO Codes sorted alphanumerically and the Paint Code (same code appears the lower left of the QR code)

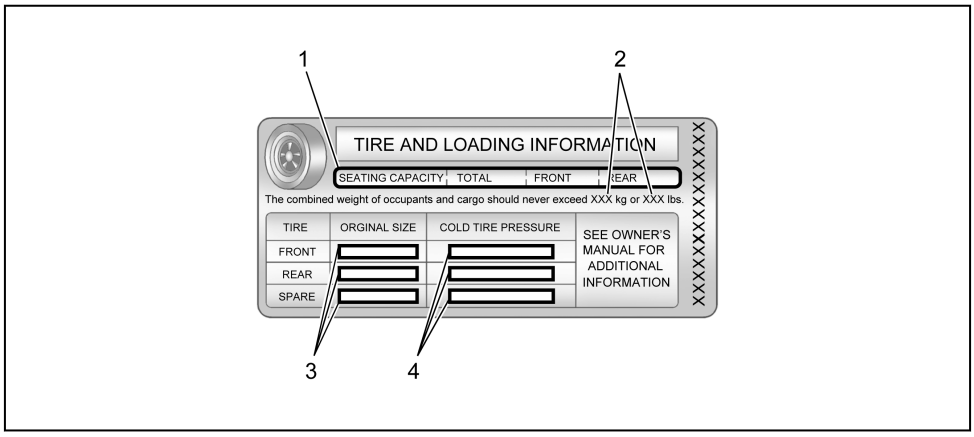

4962282

Tire Placard

Callout	Description
A vehicle-specific Tire and Loading Information label is attached to the vehicle's center pillar (B-pillar) and displays the following assessments:	
1	Specified Occupant Seating Positions
2	Maximum Vehicle Capacity Weight
3	Original Equipment Tire Size
4	Tire Pressure, Front, Rear, and Spare (Cold)

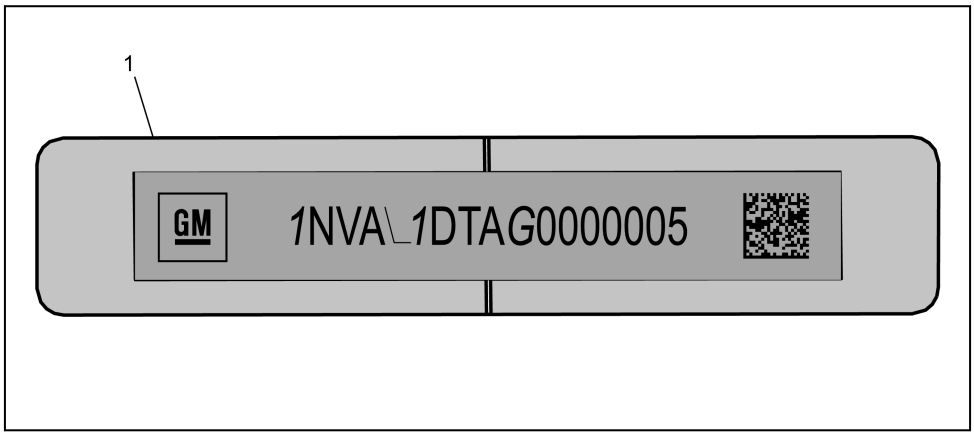

4962289

Anti-Theft Label

Callout	Description
This legal identifier is in the front corner of the instrument panel, on the driver side of the vehicle. It can be seen through the windshield from outside. The Vehicle Identification Number (VIN) also appears on the Vehicle Certification and certificates of title and registration.	
1	Vehicle Identification Number (VIN)

RPO Code List

The following table provides the description of the Regular Production Option (RPO) codes that are available on the vehicle. The vehicle's RPO list is printed on the Service Parts Identification Label.

RPO	Description
01U	PRIMARY COLOR - EXTERIOR, SPECIAL (02)
40P	WHEEL COLOR - WHITE (91)
52G	TRIM COMBINATION - CLOTH, MED NEUTRAL II (G) (00)

RPO	Description
52I	INTERIOR TRIM - MED NEUTRAL II (I) (96)
52W	TRIM COMBINATION - VINYL, MED NEUTRAL II (W) (00)
5A1	HVAC PROVISIONS - CONTROL HEAD, RR A/C (SEO)
5AZ	ACCESSORY - SAFETY KIT - UNIVERSAL
5B6	SEAT BELT COLOR - BLACK (SEO)
5B8	COVERING FLOOR - VINYL, FRT & RR (SEO) (DUP W/B38)
5BJ	ACCESSORY - CAMERA - REAR VISION W/ISRV MIRROR DISPLAY
5C4	SPRING - FRONT SUSPENSION, COMPUTER SELECTED, UPGRADE (SEO)
5C6	HOOK - CARGO TIE-DN
5D3	CALIBRATION - EXTENDED BATTERY RUN DOWN, INADVERENT POWER DELAY (SEO)
5F1	CALIBRATION - SUPPRESSION, ENG OIL CHANGE INDICATOR (WITH FUEL INFO) (SEO)
5F2	CALIBRATION - SUPPRESSION, ENG OIL CHANGE IND (WITHOUT FUEL INFO) (SEO)
5G0	WHEEL COLOR - BLACK (SEO)
5G8	CALIBRATION - ACTIVATION 'ON', TOW/ HAUL MODE (SEO)
5H1	KEY - SINGLE KEY SYSTEM, 2 SPARE KEYS
5H3	ORNAMENTATION - NAMEPLATE - NONE (SEO)
5H5	FIRE EXTINGUISHER - 2.50 LB OR EQUIV (SEO)
5H6	KIT - SAFETY REFLECTOR TRIANGLES
5L3	PANEL - TRIM, INTERIOR (SEO)
5L5	THEFT DETERENT SYS - FLEET IMMOBILIZER MODIFICATIONS (SEO)
5Q7	PANEL - TRIM-SAIL, NONE (SEO)
5T5	SEAT OVERRIDE - (SEO)
5Z5	HUBCAPS - (NONE) (SEO)
65C	LABEL, WARNING - CALIFORNIA, PROP 65 COMPLIANT
6M2	MIRROR O/S - LH & RH, MANUAL CONTROL, AUX WFOV, SHORT ARM, COLOR (SEO)
7T6	FUEL - FITTING, LINE TAKE-OFF (SEO)
8D8	MIRROR O/S - PROVISIONS ONLY, FOR AFTER MARKET POWER MIRROR (SEO)
8E1	FUEL - ADDITIONAL - 3 GALLONS (SEO)
8E9	BUMPER FRT - PAINTED, WHITE (SEO)
8G8	LAMP - CARGO OVERHEAD LED (SEO)
8N2	SEAT BELT COLOR - ORANGE (SEO)
8R2	VALVE - LONG STEM, 3 3/8 IN (SEO)

RPO	Description
8R3	VALVE - METAL (SEO)
8R7	FUEL TANK FILLER - NECK, LOWERED (FOR 96 INCH BODY WIDTH) (SEO)
8S3	ALARM B/U - ELECTRICAL, 97 DECIBELS (SEO)
8S8	WIRING PROVISIONS - ODOMETER SECURITY (SEO)
8T2	WIRING PROVISIONS - RH DOOR DELETE (SEO)
8X8	LABEL INFORMATION - LABEL, FASTEN SEAT BELTS (SEO)
93B	TRIM COMBINATION - CLOTH, JET BLACK/MED DK PEWTER (SEO)
93G	TRIM COMBINATION - CLOTH, MED DK PEWTER II (G) (03) (GMT610 - "G" VAN)
93I	INTERIOR TRIM - MED DK PEWTER II (03) (GMT610 - "G" VAN)
93W	TRIM COMBINATION - VINYL, MED DK PEWTER II (W) (03) (GMT610 - "G" VAN)
9B4	CAP - FUEL FILL, W/STAINLESS TETHER (SEO)
9B9	GOVERNOR - VEHICLE TOP SPEED LIMIT - 70 MPH (SEO)
9C2	GOVERNOR - VEHICLE TOP SPEED LIMIT - 65 MPH (SEO)
9C7	CAP - COOLANT RECOVERY BOTTLE WITH TETHER (SEO)
9D7	GOVERNOR - VEHICLE TOP SPEED LIMIT - 75 MPH (SEO)
9E9	GVW RATING - 8,600 LBS (SEO)
9EL	GOVERNOR - VEHICLE TOP SPEED LIMIT - 95 MPH
9J6	STEERING COLUMN - TILT TYPE (SEO)
9L7	EQUIPMENT - ACSRY WRG JUNC BLK
9Q4	SPRING REAR - LOWERED (SEO)
9R5	SPRING REAR - RECREATIONAL VEHICLE (SEO)
9T7	DOOR - RH - NONE (SEO)
9V5	COLOR - WOODLAND GREEN (SEO)
9W3	COLOR - WHEATLAND YELLOW, LEAD FREE (SEO)
9W4	COLOR - TANGIER ORANGE, LEAD FREE (SEO)
A07	WINDOW - BODY
A08	WINDOW - BODY, RH
A12	WINDOW RR - DR, STA
A13	WINDOW SIDE DR - RR, STA
A17	WINDOW SIDE BODY - SWING OUT, LH
A18	WINDOW RR - DR, SWING OUT
A19	WINDOW SIDE DR - RR, SWING OUT

RPO	Description
A31	WINDOW - POWER OPERATED, ALL DOORS
ACO	IDENTIFICATION - ACCESSORY CATALOG OFFERING
AG1	ADJUSTER FRT ST - POWER, MULTI-DIRECTIONAL, DRIVER
AG2	ADJUSTER PASS ST - POWER, MULTI-DIRECTIONAL
AJ1	WINDOW TINTED - DEEP, ALL EXCEPT W/S AND DRS
AJ3	RESTRAINT SYSTEM - SEAT, INFLATABLE, DRIVER, FRT
AJW	WINDOW STYLE - LAMINATED
AK5	RESTRAINT SYSTEM - SEAT, INFLATABLE, DRIVER & PASS FRT
ANC	SALES PACKAGE - SHUTTLE BUS
AR7	SEAT - FRT BKT, STANDARD
AS5	SEAT - FRT BKT, DELUXE,
ASB	EQUIPMENT - SECURITY BAR, REAR SIDE DOOR
ASF	RESTRAINT - ROOF SIDE (LH & RH), SEAT SIDE (FRONT 1ST ROW), INFLATABLE
AT8	RESTRAINT PROVISIONS - CHILD, RR SEAT, RR FACING
ATG	LOCK CONTROL, ENTRY - REMOTE ENTRY, STANDARD RANGE
AU3	LOCK CONTROL - SIDE DR, ELEC
AXK	VEHICLE TYPE - TRUCK
AXW	VEHICLE TYPE - BUS- (NOT SCHOOL BUS)
B30	COVERING FLOOR - CARPET
B31	COVERING FLOOR - VINYL, FRT, FULL WIDTH
B32	COVERING FRT - FLOOR MATS, AUX
B33	COVERING REAR - FLOOR MATS, AUX
B38	COVERING FLOOR - VINYL, FRT & RR, FULL WIDTH
B3D	SALES PACKAGE - SCHOOL BUS
BA0	ORNAMENTATION - EXTR, DOOR, NAMEPLATE
BA3	COMPARTMENT - STOWAGE, I/P LOWER EXTENSION DELUXE
BAG	PARTS PKG - EXPORT
BNC	PARTS PKG - BODY MOUNT CUSHIONS
BTV	REMOTE START - VEHICLE
BUE	KIT - EXHAUST DIESEL
C36	HEATER - AUXILIARY
C49	DEFOGGER - RR WINDOW, ELECTRIC
C4K	GVW RATING - 9,925 LBS
C4M	GVW RATING - 9900 LBS/ 4490.6 KG

RPO	Description
C60	HVAC SYSTEM - AIR CONDITIONER FRT, MAN CONTROLS
C69	HVAC SYSTEM RR - AIR CONDITIONER
C6P	GVW RATING - 8,600 LBS/3,900 KG
C6Y	GVW RATING - 9,600 LBS
C7N	GVW RATING - 12,300 LBS
C99	SWITCH - INFL RST I/P MDL MAN SUPPRESSION
CV4	COUNTRY - ISRAEL
CV8	COUNTRY - IRAQ
CX9	COUNTRY - LEBANON
CY2	COUNTRY - JORDAN
D28	MIRROR O/S - (-NONE)
D31	MIRROR I/S R/V - TILT
D3S	COUNTRY - QATAR
D4C	COUNTRY - BAHRAIN
D5P	COUNTRY - UNITED ARABIC EMIRATES
DAA	SUNSHADE - VINYL
DE5	MIRROR O/S - LH & RH, REMOTE CONTROL, ELECTRIC, HEATED, FOLDING, COLOR.
DEE	MIRROR O/S - LH & RH, REMOTE CONTROL, ELECTRIC, HEATED, MANUAL FOLDING, TURN SIG IND, (SEO)
DH6	MIRROR I/S FRT VAN - LH & RH, SUNSHADE, ILLUM
DHC	MIRROR O/S - LH & RH, MANUAL CONTROL, AUX WFOV, COLOR
DRJ	MIRROR I/S R/V - TILT, PARTIAL VIDEO DISPLAY
DSB	EQUIPMENT - SECURITY BAR DELETE, REAR SIDE DOOR
E24	DOOR SIDE - REAR, HINGED
E6H	COUNTRY - OMAN
EF7	COUNTRY - UNITED STATES OF AMERICA (USA)
ENC	HVAC PROVISIONS - AUXILLIARY HEATER PLUMBING & WIRING
EXP	EXPORT -
FE9	CERTIFICATION - EMISSION, FEDERAL
FHO	VEHICLE FUEL - GASOLINE E10
G7C	PRIMARY COLOR - EXTERIOR, PULL ME OVER RED SOLID (130X)
G7K	EQUIPMENT - ANTENNA, CABLE AND GROUNDPLATE
G80	AXLE POSITRACTION - LIMITED SLIP
GAN	PRIMARY COLOR - EXTERIOR, SWITCHBLADE SILVER MET (G) 636R
GAZ	PRIMARY COLOR - EXTERIOR, SUMMIT WHITE (G) 8624

RPO	Description
GBA	PRIMARY COLOR - EXTERIOR, BLACK (G) 8555
GT4	AXLE REAR - 3.73 RATIO
GT5	AXLE REAR - 4.10 RATIO
GU6	AXLE REAR - 3.42 RATIO
I27	ENGINEERING YEAR - 2027
IOR	RADIO - INFOTAINMENT SYSTEM - 3.X LOW HMI, MIDLEVEL CONNECTIVITY 3.X
IVR	VEHICLE - VRIDE
JFF	GVW RATING - 10,100 LBS
JH6	BRAKE - HYD POWER, 4 WHL DISC.
JH9	BRAKE - HYD POWER, 4 WHL DISC, 14,200 LBS
JL4	CONTROL, - ACTIVE BRAKE
K05	HEATER ENG - BLOCK
K34	CRUISE CONTROL - AUTOMATIC, ELECTRONIC
K50	FUEL - FITTING, LINE TAKE-OFF
K68	GENERATOR - 105 AMP
KC4	COOLING SYSTEM - ENG OIL
KD1	COOLING SYSTEM - TRANS, OIL
KG4	GENERATOR - 150 AMP
KI4	RECEPTACLE I/P - ELECTRICAL, 120 VOLT, TYPE B
KUP	THROTTLE CONTROL - ELECTRONIC
KW5	GENERATOR - 220 AMP
L8T	ENGINE - GAS, 8 CYL, 6.6L, SIDI, VVT, CAST IRON
LV1	ENGINE - GAS, 6 CYL, 4.3L, GEN 5, SIDI, V6, VVT, OHV, ALUM
MTF	PROVISIONS - FIRE EXTINGUISHER MOUNTING
MTH	TRANSMISSION - AUTO 8 SPD, 8L80, GEN 2
N33	STEERING COLUMN - TILT TYPE
N8X	TRANSMISSION - AUTO 8 SPD, 8L90, GEN 2
NCF	LOCK - CHILD SECURITY FEATURE - NONE
NE1	CERTIFICATION - EMISSION, GEOGRAPH-ICALLY RESTRICTED REGISTRATION
NE7	FUEL TANK - 216L, 57 GAL
NE8	EVAPORATIVE SYSTEM - LEVEL 3 EMISSIONS
NHT	PERFORMANCE PACKAGE - ENHANCED TOWING
NLJ	EMISSION SYSTEM - SULEV170/BIN170: FED TIER3, 8.5K-10K GVW
NLR	EMISSION SYSTEM - SULEV230/BIN230: FED TIER3, 10K-14K GVW

RPO	Description
NPL	PLATE - NAME - NONE
P03	COVER, WHEEL - VAR 3
PNC	PANEL - TRIM, FRT DOORS & SI RR DOOR(S) & RR DOORS
PPC	PANEL - TRIM, RR DOORS
PSR	RESERVOIR - POWER STEERING FLUID, WITH LEVEL SIGHT (SEO)
Q8C	CAP - VALVE, TIRE, AIR-THRU (SEO)
QB5	WHEEL - 16 X 6.5, J, STEEL
QT4	WHEEL - 16 X 6.5, STEEL H.D.
R04	WHEEL CONFIGURATION - RR, SINGLE
R05	WHEEL CONFIGURATION - RR, DUAL
R25	APPEARANCE PACKAGE - EXTERIOR, CHROME GRILLE & PAINTED BUMPER
R26	APPEARANCE PACKAGE - EXTERIOR, CHROME GRILLE & FRONT BUMPER
RDI	ACCESSORY - KEYLESS ENTRY
RGI	ROUTING GROMMET - UPFITTER, FRONT OF DASH (SEO)
RVG	ACCESSORY - ADAPTER - TRAILER HARNESS
RYT	ACCESSORY - FIRST AID KIT
RYY	ACCESSORY - FLOOR MATS - MOLDED VINYL
RZW	ACCESSORY - HARNESS - TRAILER HITCH
S08	ACCESSORY - HIGHWAY SAFETY KIT
S52	ACCESSORY - MOLDED HOOD PROTECTOR - SMOKED
S6N	ACCESSORY - RECEIVER COVER - TRAILER HITCH
SDD	ACCESSORY - TRAILER HITCH - FIXED
SDI	ACCESSORY - TRIANGLE - REFLECTIVE
SDS	ACCESSORY - WEATHER DEFLECTORS - SIDE WINDOW - SMOKED
SFE	ACCESSORY - WHEEL LOCKS
SFV	ACCESSORY - WIRELESS NETWORK INTERFACE MODULE
T74	CONTROL, HEADLAMPS - AUTOMATIC, DELAY
TGA	LANGUAGE CONTROL - ENGLISH, FRENCH, SPANISH
TGG	LANGUAGE CONTROL - ENGLISH, ARABIC, FRENCH
TP3	BATTERY - 770 CCA & 770 CCA (DUAL)770 CCA & 770 CCA (DUAL)
TR9	LAMP GROUP -
U05	HORN - DUAL
U19	SPEEDOMETER - INST, KILO & MILES, KILO ODOMETER
U2J	DIGITAL AUDIO SYSTEM - S-BAND - NONE

RPO	Description
U73	ANTENNA - FIXED, RADIO
U80	DISPLAY - COMPASS
U95	SPEAKER SYSTEM - 2, BASE
UA1	BATTERY - HIGH CAPACITY, WET
UA7	THEFT DETERENT SYS - EXPORT SPECIFIC, VAR #02
UC2	SPEEDOMETER - INST, KILO & MILES, KILO ODOMETER, POSITIVE BIAS
UD4	ALARM - VEHICLE SPEED, 120 K/H (DON'T USE AFTER 2010 ON NEW MAJORS - USE CTY COD &/OR VCS FAM COD INSTEAD)
UD7	PARK ASSIST - REAR
UE0	COMMUNICATION SYSTEM - VEHICLE - NONE
UE1	COMMUNICATION SYSTEM - VEHICLE, ONSTAR
UEN	SENSOR INDICATOR - SEAT BELT, FRT PASS PRESENCE DETECTOR
UEU	SENSOR INDICATOR - FORWARD COLLISION ALERT
UF3	SWITCH - HIGH IDLE
UFA	DISPLAY - OUTSIDE TEMPERATURE
UFL	LANE ACTIVE SAFETY - DEPARTURE WARNING
UFT	SIDE ACTIVE SAFETY - OBSTACLE DETECTION
UIR	INFOTAINMENT DISPLAY - NORMALLY BLACK COLOR (TFT), 7", WVGA 800X480P
UJ1	INDICATOR - SYSTEM, BRAKE WARNING
UJM	TIRE PRESS INDICATOR - MANUAL LEARN
UL2	FREQUENCIES - EUROPEAN
UL8	FREQUENCIES - SAUDI ARABIAN
UQF	SPEAKER SYSTEM - STANDARD AUDIO
UTJ	THEFT DETERENT - ELECTRICAL, UNAUTHORIZED ENTRY
UTN	PROVISIONS - UPFITTER CONTROL AND MONITORING
UVC	VISION - REAR VIEW, MONO, ANALOG
UY7	WIRING HARNESS - TRUCK TRAILER, HD
V10	PROVISION OPTIONS - COLD WEATHER
V22	GRILLE - RADIATOR, CHROME
V37	BUMPER - FRT & RR, CHROME
V46	BUMPER FRT - CHROME
V4D	CALIBRATION - SEPARATED STOP/TURN SIGNAL CIRCUITS
V87	VEHICLE STATEMENT - VEHICLE LABEL CONTENT - GULF STATES ORGANIZATION
V8D	VEHICLE STATEMENT - VEHICLE LABEL CONTENT - U.S. FMVSS

RPO	Description
V8E	VEHICLE STATEMENT - VEHICLE LABEL CONTENT - CANADA CMVSS
V8I	VEHICLE STATEMENT - VEHICLE LABEL CONTENT - ISRAEL FMVSS
VBX	LANGUAGE LABEL - ARABIC
VC5	LABEL - SHIPPING, EXCEPT US, US POSSESSIONS, OR JAPAN
VG8	VEHICLE - LABEL, NOTICE TO BUYER
VH6	BUMPER FRT - BLACK
VJG	BUMPER RR - BLACK
VK3	LICENSE PLATE FRONT - FRT MOUNTING PKG
VK5	SEAT - TEMPORARY, FOR SHIPPING
VLI	ACCESSORY - MAT - TRUNK / CARGO AREA
VLU	ACCESSORY - SECURITY SCREEN PACKAGE - REAR WINDOW W/O POP - OUT
VP6	NOISE CONTROL - (BLANK)
VPH	VEHICLE PREPARATION - OVERSEAS DELIVERY
VQK	ACCESSORY - SPLASH GUARDS - CUSTOM MOLDED
VR4	TRAILER HITCH - WEIGHT DISTRIBUTING PLATFORM
VR6	HOOK - TIE-DN SHPG
VT7	OWNERS MANUAL - ENGLISH LANGUAGE
VUL	ACCESSORY - BLUETOOTH ENTERTAINMENT - AUDIO
VXT	VEHICLE TYPE - INCOMPLETE
VXW	ACCESSORY - ASSIST STEPS - MOLDED
WEN	PLANT CODE - WENTZVILLE, MO, USA
WNS	VIN MODEL YEAR - 2027
X88	MARKET BRAND - CHEVROLET
XHF	TIRE FRONT - LT225/75R16 E 115/112 S BL ALS
XL7	FREQUENCIES RATING - 315 MHZ, LONG DISTANCE
XL8	FREQUENCIES RATING - 433 MHZ
XLP	TIRE FRONT - LT245/75R16 E 120/116 S BW ALS
Y3H	SALES PACKAGE - HANDICAPPED, MOBILITY, PARATRANSIT
YA2	DOOR SIDE - REAR, SLIDING DOOR, MANUAL
YB9	PAINT PROCESS - INTERIOR - NONE
YC6	PACKAGE, CONVENIENCE - DECOR LEVEL #6
YF1	SALES PACKAGE - CUTAWAY UPFITTER
YF2	SALES PACKAGE - AMBULANCE UPFITTER

RPO	Description
YF5	CERTIFICATION - EMISSION, CALIFORNIA
YHF	TIRE REAR - LT225/75R16 E 115/112 S BL ALS
YK6	IDENTIFICATION - (SEO)
YLP	TIRE REAR - LT245/75R16 E 120/116 S BW ALS
YM8	IDENTIFICATION - LIMITED PERSONALI-ZATION OPTION (LPO)
Z49	COUNTRY - CANADA
Z82	TRAILER PROVISIONS - SPECIAL EQUIPMENT, H.D.
Z88	MARKET BRAND - GMC
ZHF	TIRE SPARE - LT225/75R16 E 115/112 S BL ALS
ZLP	TIRE SPARE - LT245/75R16 E 120/116 S BW ALS
ZP0	SEATING ARRANGEMENT - TEMPORARY DRIVER
ZP3	SEATING ARRANGEMENT - 15 PASS
ZP6	SEATING ARRANGEMENT - 5 PASS CARGO
ZQ2	SALES PACKAGE - DRIVER CONVENIENCE
ZQ3	SALES PACKAGE - DRIVER CONVENIENCE II
ZR7	APPEARANCE PACKAGE - GRILLE & BUMPER CHROME
ZW1	WINDOW PKG - RH SIDE RR DRS (SEO)
ZW2	WINDOW PKG - RR DRS
ZW3	WINDOW PKG - RR DRS, SIDE RR DR
ZW4	WINDOW PKG - RH SIDE, RR DRS
ZW6	WINDOW PKG - COMPLETE BODY
ZW9	BODY EQUIPMENT - BASE BODY OR CHASSIS
ZX1	SEATING ARRANGEMENT - DRIVER ONLY, HIGH BACK
ZX2	SEATING ARRANGEMENT - DRIVER & PASS, HIGH BACK
ZX5	SEATING ARRANGEMENT - 12 PASS
ZX9	TIRE SPARE - W/WHEEL - NONE
ZY1	COLOR COMBINATION - SOLID (MEDIUM DUTY ONLY)

Section 1

Body Systems

Fixed and Moveable Windows **1-4**
Specifications **1-4**
Fastener Specifications 1-4
Schematic and Routing Diagrams **1-4**
Moveable Window Schematics 1-5
Defogger Schematics 1-6
Diagnostic Information and Procedures **1-7**
Side Door Window Mechanical Diagnosis 1-7
Repair Instructions **1-7**
Windshield Replacement 1-7
Front Side Door Window Replacement 1-9
Body Side Window Replacement (Stationary) 1-10
Body Side Window Replacement (Swing out) 1-11
Hinged Rear Window Replacement 1-14
Rear Window Replacement 1-15
Door Window Regulator Handle Replacement 1-16
Front Side Door Window Module Replacement 1-17
Front Side Door Window Switch Replacement 1-18
Front Side Door Window Regulator Motor Replacement 1-19
Front Side Door Window Belt Inner Sealing Strip Replacement 1-20
Front Side Door Window Belt Reveal Molding Replacement 1-21
Intermediate Side Door Window Weatherstrip Replacement 1-21
Sliding Door Window Weatherstrip Replacement 1-23
Adhesive Installation of Stationary Windows 1-24
Adhesive Installation of Windshields 1-28
Adhesive Installation of Bodyside Stationary Windows 1-30
Front Side Door Window Channel Replacement - Upper Front 1-34
Front Side Door Window Channel Replacement - Lower Rear 1-38
Description and Operation **1-38**
Full-Cut Method Description 1-38
Stationary Window Description 1-39
Urethane Adhesive Description 1-39
Special Tools and Equipment **1-39**
Special Tools 1-39
Horns and Pedestrian Alerts **1-40**
Specifications **1-40**
Fastener Specifications 1-40
Schematic and Routing Diagrams **1-40**
Horn Schematics 1-41
Repair Instructions **1-42**
Horn Replacement 1-42
Lighting **1-43**
Specifications **1-43**
Fastener Specifications 1-43
Schematic and Routing Diagrams **1-43**
Headlights/Daytime Running Lights (DRL) Schematics 1-44
Exterior Lights Schematics 1-47
Interior Lights Schematics 1-52
Interior Lights Dimming Schematics 1-54
Repair Instructions **1-57**
Headlamp Switch Replacement 1-57
Headlamp Automatic Control Ambient Light Sensor Replacement 1-58
Dome and Reading Lamp Replacement - Front 1-58

Dome and Reading Lamp Bulb Replacement 1-60
Center Reading and Courtesy Lamp Replacement 1-61
Sunshade Illuminated Mirror Lamp Bulb Replacement 1-62
Front Headlamp Replacement 1-63
High Beam Headlamp Bulb Replacement 1-64
Low Beam Headlamp Bulb Replacement 1-65
Front Headlamp Aiming 1-65
Parking and Turn Signal Lamp Replacement 1-68
High Mount Stop Lamp Replacement 1-69
High Mount Stop Lamp Bulb Replacement 1-70
Cargo Center Courtesy Lamp Replacement 1-71
Backup Bulb Replacement 1-72
Rear License Plate Lamp Replacement 1-73
Tail Lamp Replacement 1-74
Stop and Tail Lamp Bulb Replacement 1-75
Mirrors 1-76
Specifications 1-76
Fastener Specifications 1-76
Schematic and Routing Diagrams 1-76
Outside Rearview Mirror Schematics 1-77
Repair Instructions 1-79
Outside Rearview Mirror Opening Cover Replacement 1-79
Power Mirror Switch Replacement 1-80
Manual Mirror Replacement (DE2) 1-81
Manual Mirror Replacement (DHC) 1-82
Power Mirror Replacement 1-83
Outside Rearview Mirror Glass Replacement (Base Level) 1-83
Outside Rearview Mirror Glass Replacement - Lower 1-85
Outside Rearview Mirror Glass Replacement - Lower 1-86
Outside Rearview Mirror Glass Replacement - Upper 1-88
Camper Type Rearview Mirror Replacement 1-89
Commercial Rearview Mirror Replacement 1-89
Inside Rearview Mirror Replacement 1-90
Trailering Systems 1-92
Schematic and Routing Diagrams 1-92
Trailering Systems Schematics 1-93
Vehicle Access 1-95
Specifications 1-95
Fastener Specifications 1-95
Adhesives, Fluids, Lubricants, and Sealers 1-95
Schematic and Routing Diagrams 1-96
Door Lock/Indicator Schematics 1-97
Hood Latch Schematics 1-100
Diagnostic Information and Procedures 1-101
Door Will Not Open/Close, Door Binding, or Locks, Handles, or Cylinders Do Not Function 1-101
Repair Instructions 1-105
Door Control Replacement 1-105
Lock Cylinder Binding 1-108
Door Lock Cylinder Replacement 1-109
Rear Door Lock Cylinder Replacement 1-110
Front Side Door Inside Handle Replacement 1-112
Front and Rear Side Door Outside Handle Rod Clip Replacement 1-117
Intermediate Side Door Inside Handle Replacement 1-119
Door Outside Handle Replacement 1-119
Sliding Door Outside Handle Replacement 1-123
Rear Door Inside Handle Replacement 1-124
Rear Door Latch Control Replacement 1-124
Rear Side Door Latch Control Replacement 1-125

Sliding Door Inside Handle Replacement 1-126
Rear Door Latch Replacement - Lower 1-127
Rear Side Door Latch Replacement (Cargo Door) 1-127
Rear Side Door Latch Replacement (Front Door) 1-128
Rear Side Door Lower Latch Replacement 1-130
Rear Side Door Latch Replacement - Upper 1-131
Rear Door Latch Replacement - Upper 1-131
Rear Side Door Lock Cylinder Replacement 1-134
Rear Door Lock Replacement 1-134
Intermediate Side Door Lock Replacement 1-136
Front Side Door Lock Replacement 1-139
Sliding Door Rear Lock Replacement 1-144
Door Lock Harness Contact Replacement 1-145
Body Side Upper Front and Rear Access Panel Strut Replacement 1-145
Intermediate Side Door Lower Hook Striker Replacement 1-148
Door Striker Replacement (Cargo Door) 1-149
Door Striker Replacement (Front Door) 1-149
Front Side Door Lock Striker Replacement (Cargo) 1-150
Front Side Door Lock Striker Replacement (Passenger) 1-151
Lock Striker Replacement - Lower 1-152
Rear Side Door Latch Striker Replacement (Cargo Door) 1-153
Rear Side Door Latch Striker Replacement (Sliding Door Front) 1-154
Rear Side Door Latch Striker Replacement (Sliding Door Rear) 1-155
Rear Side Door Latch Striker Replacement - Lower 1-156
Rear Side Door Latch Striker Adjustment - Front 1-157
Rear Side Door Latch Striker Adjustment - Rear 1-157
Rear Door Latch Striker Replacement - Upper 1-157
Rear Side Door Latch Striker Replacement - Upper 1-158
Door Lock Switch Replacement 1-159

Wipers and Washers 1-160

Specifications 1-160
Fastener Specifications 1-160

Schematic and Routing Diagrams 1-160
Wiper/Washer Schematics 1-161

Diagnostic Information and Procedures 1-163
Wiper Arm Tip Pressure Check 1-163
Wiper Blade Element Check 1-163

Repair Instructions 1-163
Windshield Washer Hose Replacement 1-163
Windshield Washer Solvent Container Replacement 1-165
Washer Pump Replacement 1-166
Plenum Drain Tube Replacement 1-167
Air Inlet Grille Panel Replacement (Left Side) 1-169
Air Inlet Grille Panel Replacement (Right Side) 1-170
Windshield Wiper Arm Replacement 1-171
Windshield Wiper Blade Replacement 1-172
Wiper Blade Element Replacement 1-173
Windshield Wiper System Module Replacement 1-174
Windshield Multifunction Sensor Mount Bracket Cover Replacement 1-175
Windshield Multifunction Sensor Mount Bracket Cover Insert Replacement 1-176
Windshield Glass Cleaning 1-176
Wiper Blade Element Cleaning 1-176
Wiper Chatter or Streak Repair 1-177
Windshield Wiper Arm Adjustment 1-177

Special Tools and Equipment 1-178
Special Tools 1-178

Body Systems

Fixed and Moveable Windows

Specifications

Fastener Specifications

Reusable Threaded Fastener Tightening Specifications

Note: All fasteners listed in this table can be reused after removal.	
Application	**Specification**
	Metric (English)
Body Side Window Hinge Nut	10 newtonm (89 lb in)
Body Side Window Latch Screw	3 newtonm (27 lb in)
Door Window Hinge Screw	3 newtonm (27 lb in)
Door Window Latch Screw	3 newtonm (27 lb in)
Front Side Door Lock Screw	10 newtonm (89 lb in)
Front Side Door Window Channel Bolt	10 newtonm (89 lb in)
Front Side Door Window Regulator Motor Nut	7 newtonm (62 lb in)
Front Side Door Window Sash Nut	10 newtonm (89 lb in)

Schematic and Routing Diagrams

7085657

Moveable Window Schematics (Moveable Windows (A31))

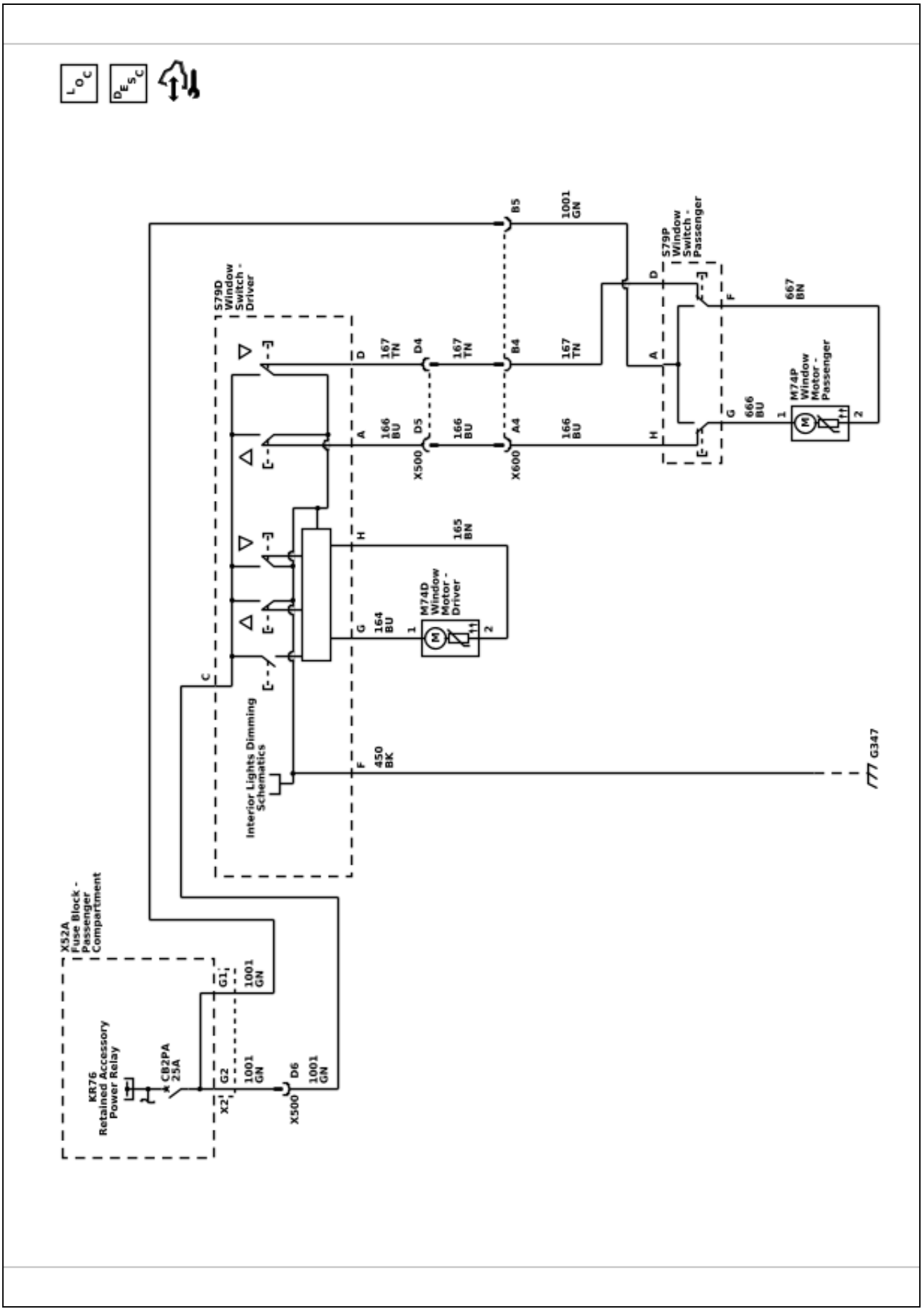

Defogger Schematics (Defogger (C49))

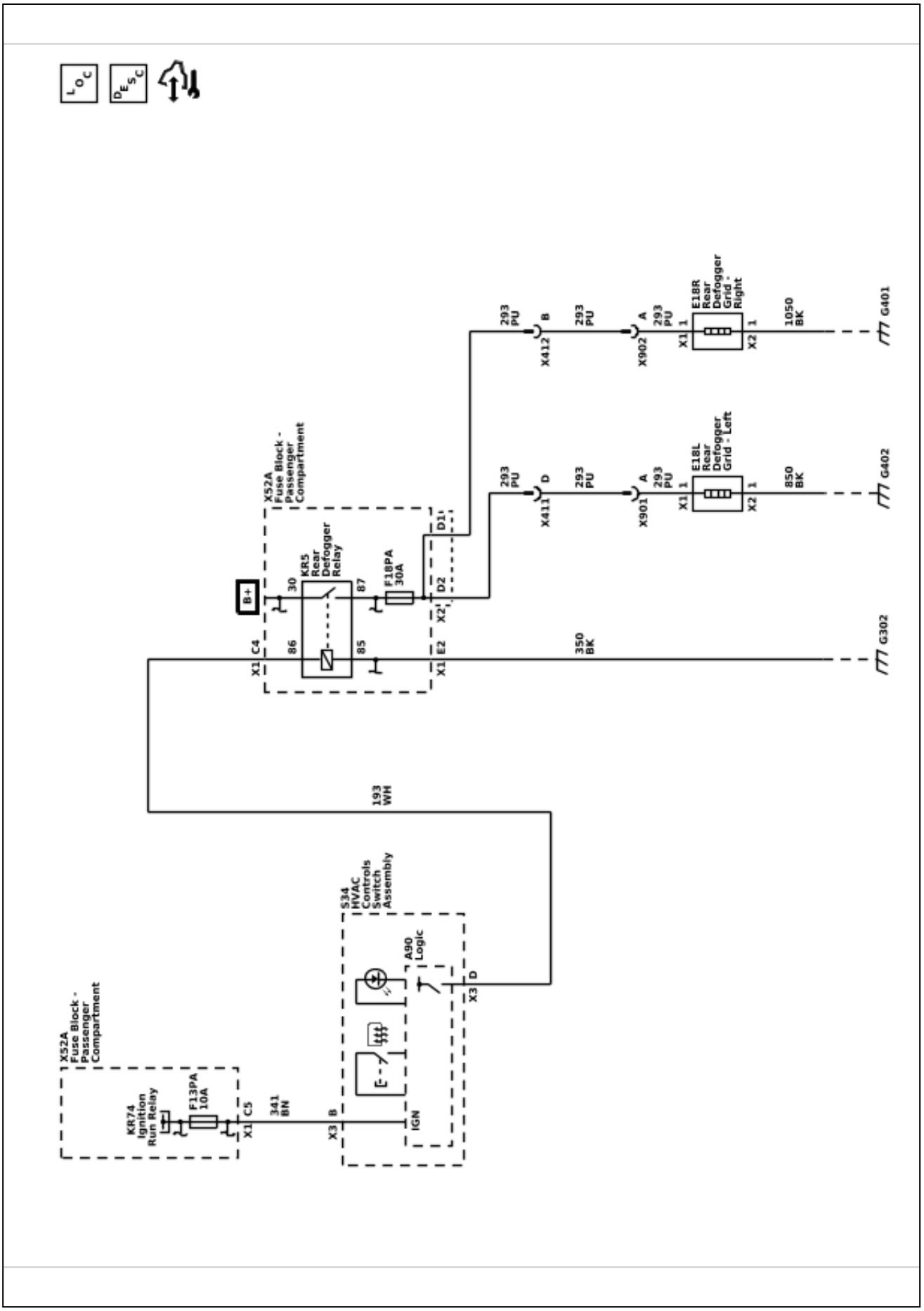

7085658

Diagnostic Information and Procedures

Side Door Window Mechanical Diagnosis

Side Door Window Mechanical Diagnosis

Cause	Correction
DEFINITION: A mechanical condition that requires a correction for proper operation of the side door window. Refer to [Link target (target-id 157990-) not found] prior to beginning this table.	
Intermittent Operation	Check proper glass alignment/attachment and door seal installation.
	Check switch and switch bezel to see if sticking.
	Check wire harness for pinched/shorted wire.
	THIS STEP APPLIES TO ALL TWO PIN MOTOR CONNECTORS ONLY. Perform electrical diagnostics, by first applying 12 volt power supply to the regulator motor to verify motor function.
Glass Binds	Check proper glass alignment/attachment.
	Check for defective seal and/or proper seal installation.
	Check for debris in glass run channel.
	Check for glass run channel position.
Regulator/Glass Rattles	Check for loose fasteners and retorque if required.
	Check that the glass is in the channel and reinstall if not positioned correctly.
Noisy Operation	Check for other components in the glass path such as wire harness, impact foam, lock rods, or cables.
	Check for proper glass alignment/attachment and door seal installation.
Windnoise	Check seals, mirror patch, and glass alignment.
False glass reversal, the glass goes down unexpectedly.	Check seals, reinitialize the glass and/or realign the glass.
	Check for debris in the glass run channel.

Repair Instructions

Windshield Replacement

Removal Procedure

Note: Before cutting out a stationary window, apply a double layer of masking tape around the perimeter of the painted surfaces and the interior trim.

1. Remove the windshield wiper arms. Refer to *Windshield Wiper Arm Replacement 1-171*.
2. Open the hood.
3. Remove the air inlet grille. Refer to *Air Inlet Grille Panel Replacement (Left Side) 1-169* *Air Inlet Grille Panel Replacement (Right Side) 1-170*.
4. Remove the inside rearview mirror. Refer to *Inside Rearview Mirror Replacement 1-90*.

Warning: Refer to [Link target (target-id 178024-) not found] .

5. Cover to protect the following parts from broken glass:
   - The upper dash pad
   - The defroster outlets and A/C outlets
   - The seats
   - The carpeting
6. Remove the defroster vent grille. Refer to [Link target (target-id 148159-) not found] .

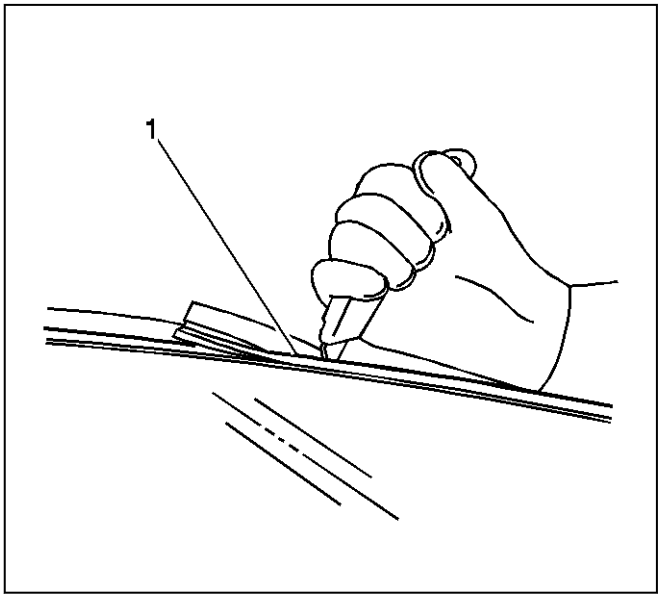

379905

Warning: Refer to [Link target (target-id 178050-) not found] .

7. Using a sharp utility knife, carefully cut the edge of the lace (1) in order to expose the urethane adhesive bead.
8. Apply a double layer of masking tape to the edge of the roof panel and A-pillars.

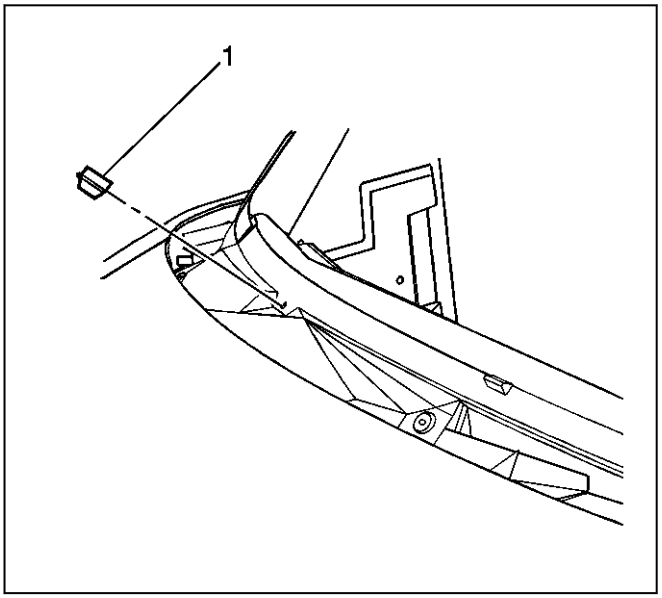

326804

9. Remove the lower windshield supports (1) from the plenum panel, if equipped.

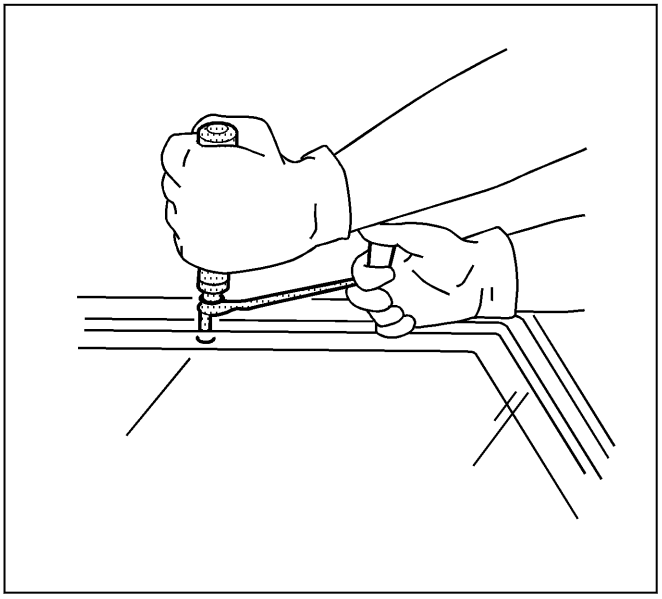

71179

10. Keep the cutting edge of the tool against the window. This will allow the urethane adhesive to be separated from the window.
    - Leave a base of urethane on the pinchweld flange.
    - The only suitable lubrication is clear water.
    - Use commercially available glass cutting tool.

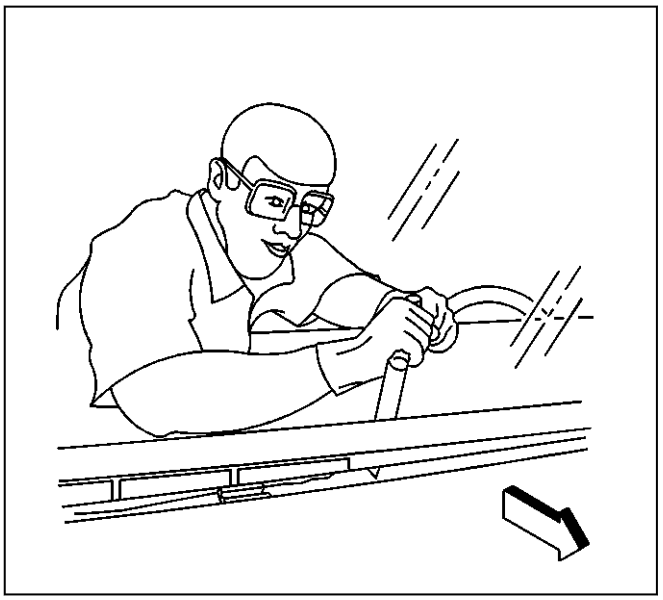

379883

11. Remove the bottom of the window from the urethane adhesive using a long utility knife or similar tool. Keep the cutting edge of the utility knife against the glass. Do this from inside the vehicle.

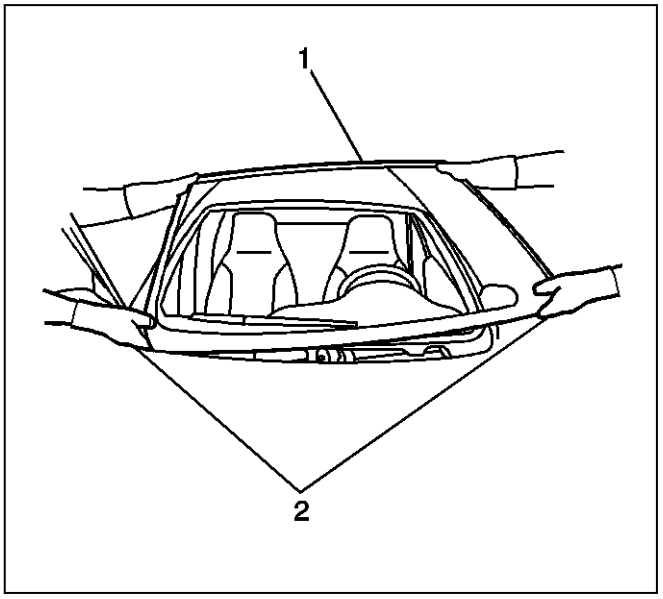

441419

12. Remove the windshield (1) from the vehicle with the aid of an assistant (2) .

Installation Procedure

1. Install the stationary window into the opening. Refer to *Adhesive Installation of Windshields 1-28*.
2. Install the defroster grille. Refer to [Link target (target-id 148159-) not found] .
3. Install the inside rearview mirror. Refer to *Inside Rearview Mirror Replacement 1-90*.
4. Install the air inlet grille. Refer to *Air Inlet Grille Panel Replacement (Left Side) 1-169* *Air Inlet Grille Panel Replacement (Right Side) 1-170*.
5. Close the hood
6. Install the windshield wiper arms. Refer to *Windshield Wiper Arm Replacement 1-171*.
7. Remove the double layer of masking tape around the perimeter of the painted surfaces and the interior trim.

Front Side Door Window Replacement

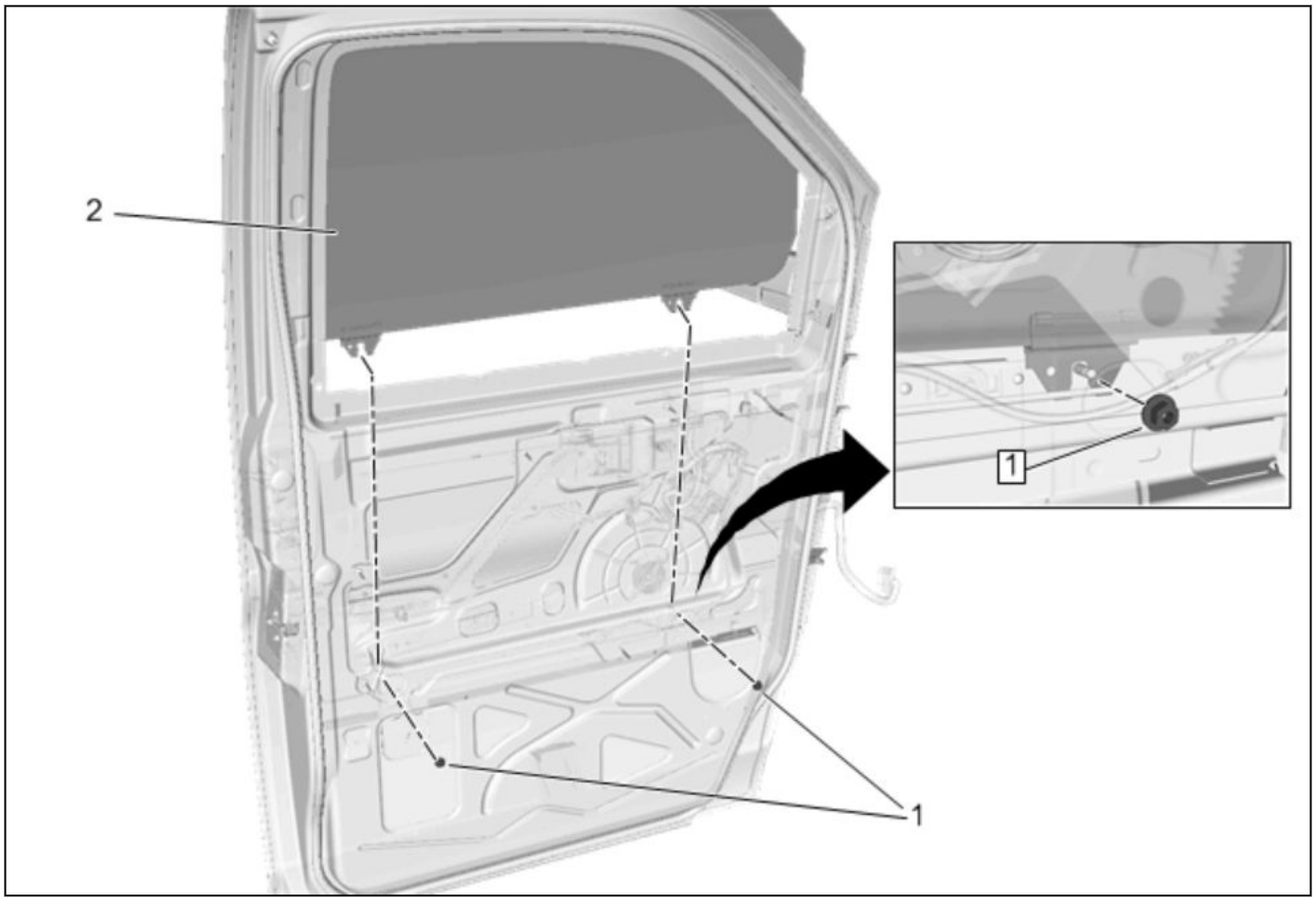

4847571

Front Side Door Window Replacement

Callout	Component Name
Warning: Refer to [Link target (target-id 178050-) not found] . ***Warning: Disconnect the power window switch when working inside the door. When operated, the Express Up/Down Feature allows the door window to move very quickly, without stopping, which could cause personal injury.*** **Preliminary Procedure** *Front Side Door Window Channel Replacement - Upper Front 1-34*	
1	Front Side Door Window Sash Nut [2x] **Procedure** Lower window to gain access to front side door window sash nuts. **Tighten** 10 N•m (89 lb in)
2	Front Side Door Window **Procedure** 1. Lift window and remove from outside of vehicle. 2. Inspect the door window for proper operation before installing the door trim panel.

Body Side Window Replacement (Stationary)

Special Tools

- *J 24402-A* Glass Sealant Remover (Cold Knife)
- *J 39032* Stationary Glass Removal Tool
- Use a urethane adhesive system which meets GM Specification GM 3651G

For equivalent regional tools. *Special Tools 1-39*

Removal Procedure

Warning: If a window is cracked but still intact, crisscross the window with masking tape in order to reduce the risk of damage or personal injury.

Note: Before cutting out a stationary window, apply a double layer of masking tape around the perimeter of the painted surfaces and the interior trim.

1. Remove the left side stationary window. [Link target (target-id 51619-) not found]
2. Remove the rear side stationary window. [Link target (target-id 51622-) not found]
3. Remove the right side stationary window. [Link target (target-id 51623-) not found]

Warning: If broken glass falls into the defroster outlets, it can be blown into the passenger compartment and cause personal injury.

4. Cover to protect the following parts from broken glass:
   - The upper dash pad
   - The defroster outlets and A/C outlets
   - The seats
   - The carpeting

Warning: When working with any type of glass or sheet metal with exposed or rough edges, wear approved safety glasses and gloves in order to reduce the chance of personal injury.

5. Cover to protect the following parts from broken glass:
   5.1. Upper dash pad
   5.2. Defroster outlets and A/C outlets
   5.3. Seats and carpeting

Note: Keep the cutting edge of the tool against the window.

6. This will allow the urethane adhesive to be separated from the window.
   - Leave a base of urethane on the pinchweld flange.
   - The only suitable lubrication is clear water.
   - Use *J 24402-A* Glass Sealant Remover (cold knife),
   - Use *J 39032* Stationary Glass Removal Tool .
7. Remove the stationary window from the pinchweld flange with the aid of an assistant.

Installation Procedure

1. Install the stationary window into the opening. *Adhesive Installation of Bodyside Stationary Windows 1-30*
2. Install the left side stationary window. [Link target (target-id 51619-) not found]
3. Install the rear side stationary window. [Link target (target-id 51622-) not found]
4. Install the right side stationary window. [Link target (target-id 51623-) not found]
5. Remove the double layer of masking tape around the perimeter of the painted surfaces and the interior trim.

Body Side Window Replacement (Swing out)

Removal Procedure

Warning: Refer to [Link target (target-id 178050-) not found] .

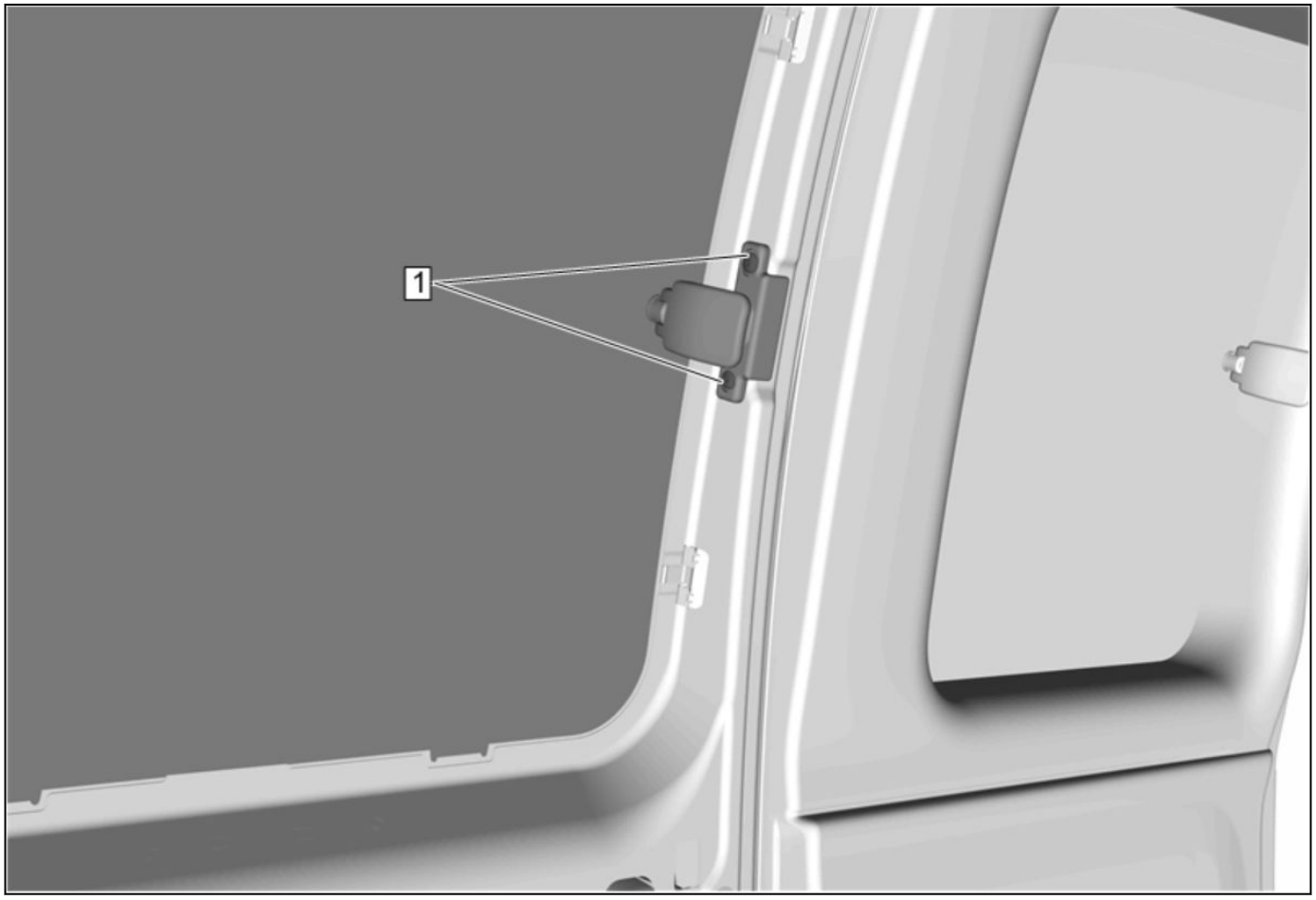

5145826

1. The latched side window is a one-piece assembly that includes the following components:
   - The window
   - The hinges
   - The latch assembly
2. Body Side Rear Garnish Molding » Remove—[Link target (target-id 51620-) not found]
3. Remove rivets (1) that retain the latch to the vehicle.

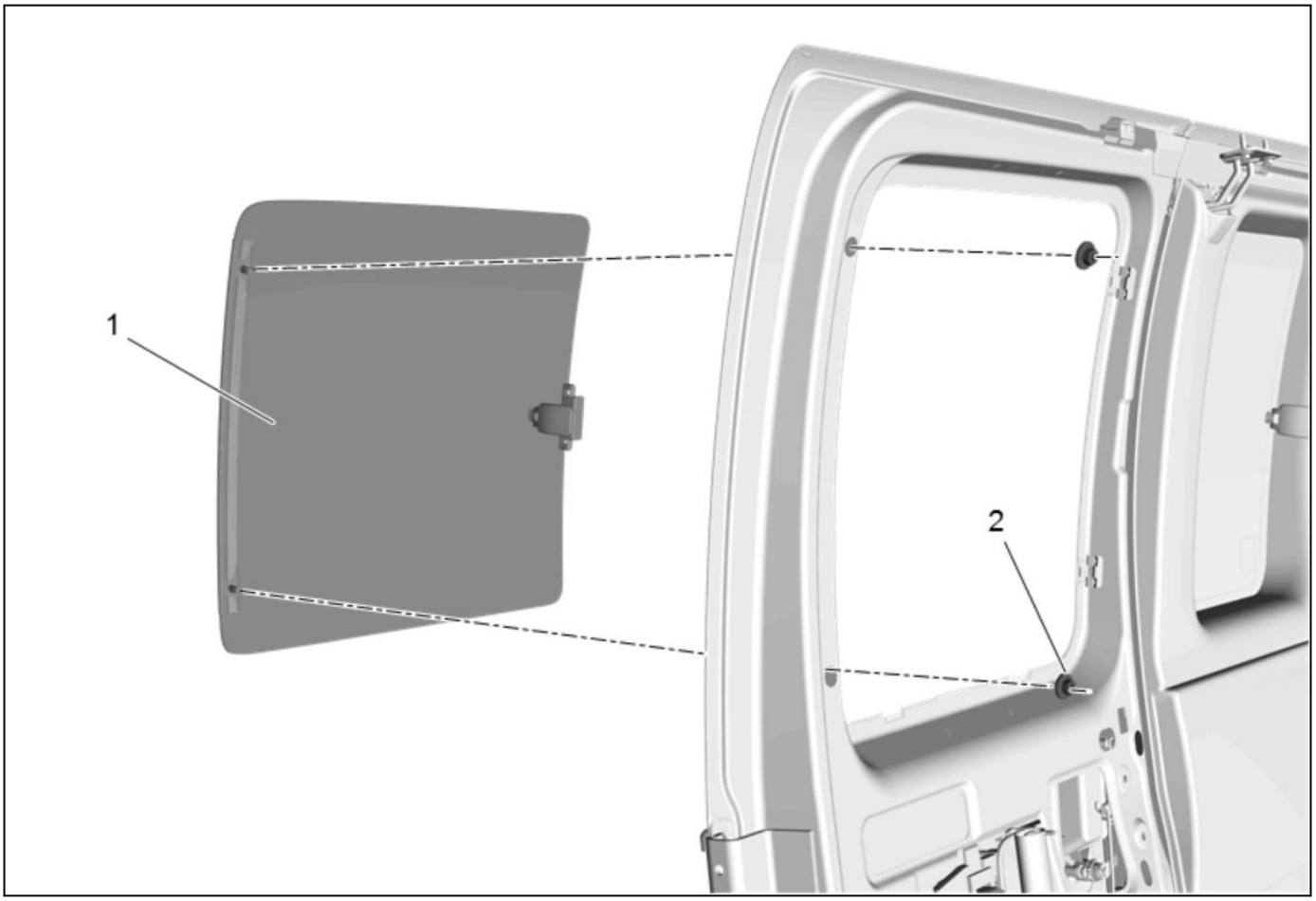

5145842

4. Remove the 2 nuts (2) that retain the hinge to the vehicle.
5. Remove the window assembly (1) from the vehicle. Do not replace the weatherstrip unless the weatherstrip is damaged.

Installation Procedure

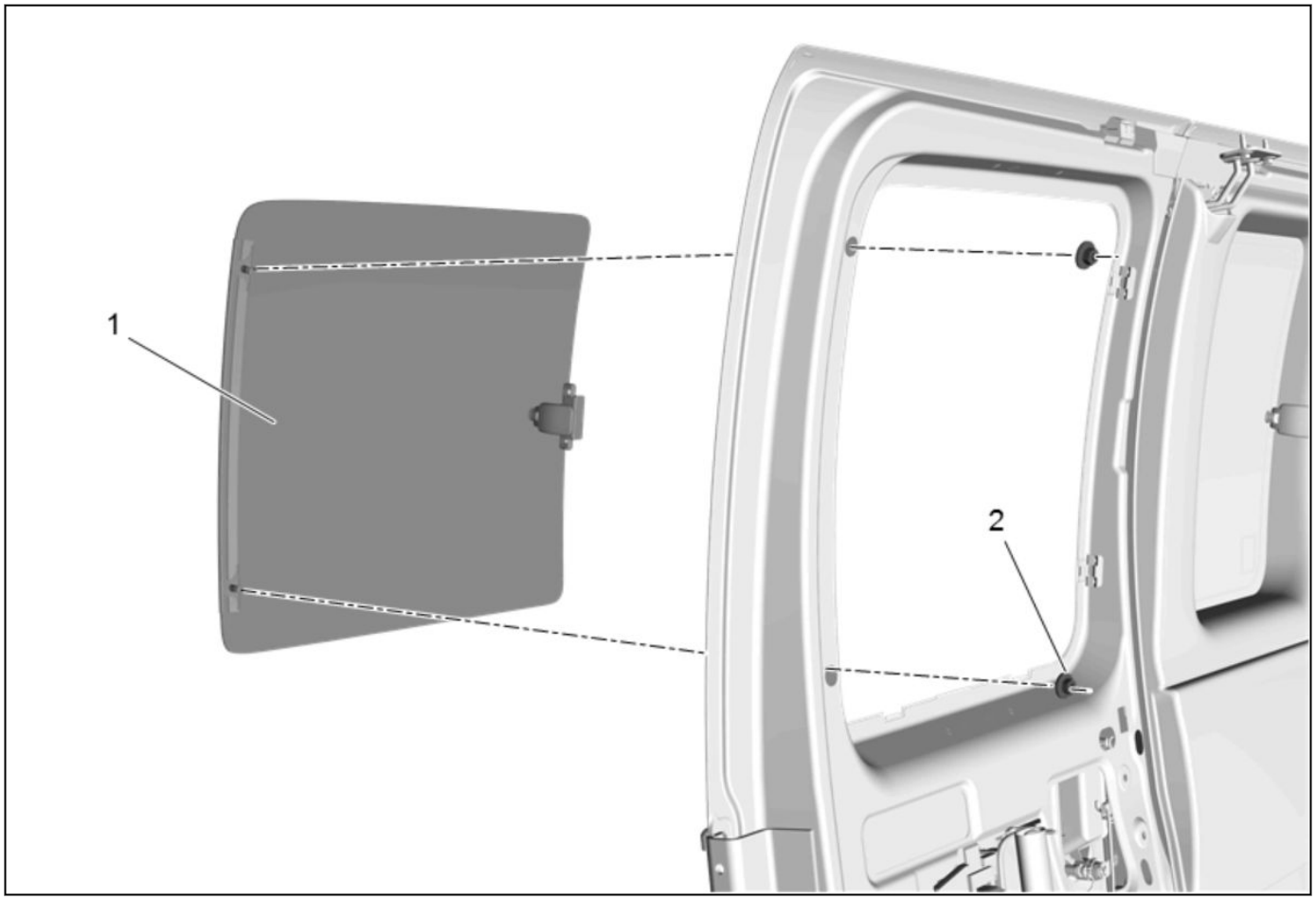

5145842

1. Install the window and hinge assembly (1) to the vehicle.

Caution: Refer to [Link target (target-id 178169-) not found] .

2. Install the 2 nuts (2) that retain the hinge to the vehicle and tighten to **10 newtonm (89 lb in)**.

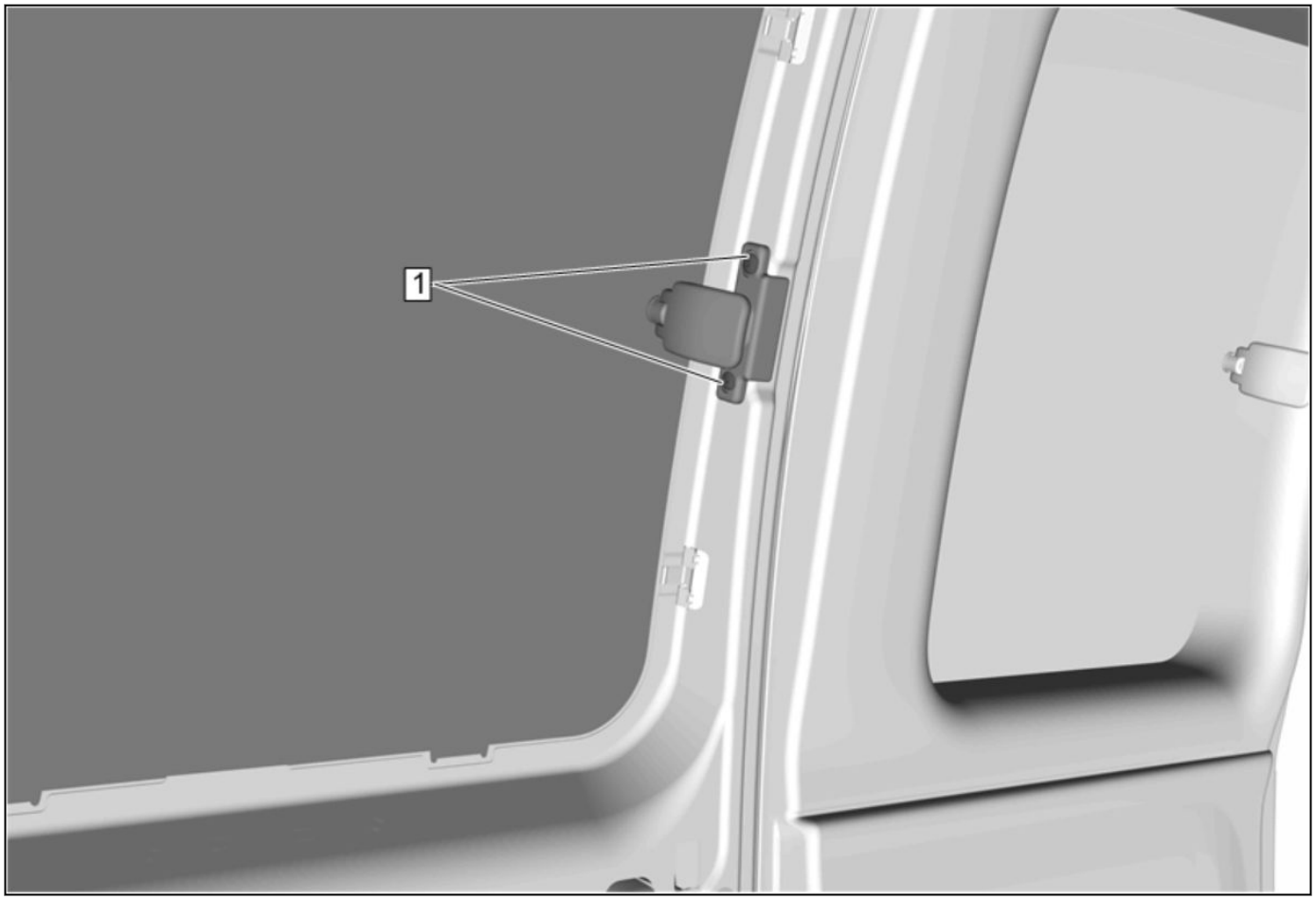

5145826

3. Install 2 new rivets (1) that retains the latch to the vehicle.
4. Body Side Rear Garnish Molding » Install— [Link target (target-id 51620-) not found]

Hinged Rear Window Replacement

Removal Procedure

1. Rear Door Trim Panel » Remove
   - [Link target (target-id 149949-) not found]
   - [Link target (target-id 149950-) not found]

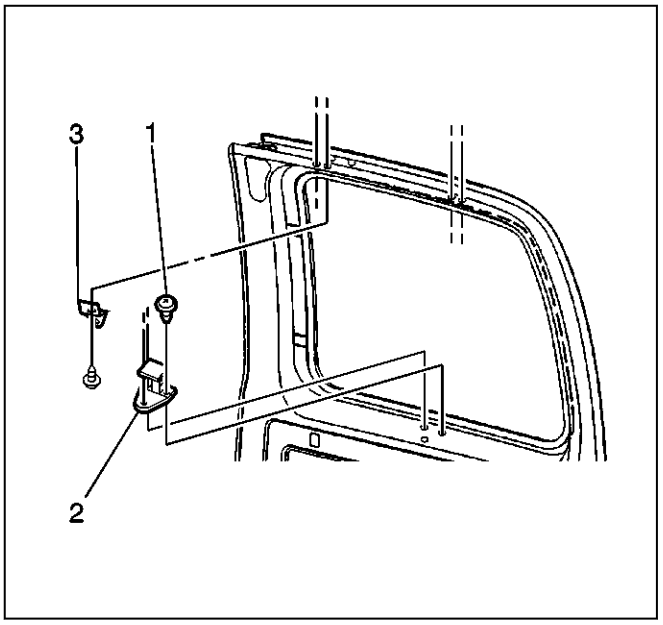

326818

Warning: Refer to [Link target (target-id 178050-) not found] .

Warning: Eye protection must be worn when drilling rivets to reduce the chance of personal injury.

2. Disconnect the electrical connectors and release the wiring harness retainers as necessary.
3. Drill out the rivets (1) that retain the latch to the door.
4. Drill out the rivets that retain the hinge (3) to the door.
5. Remove the window assembly from the vehicle.

Installation Procedure

1. With aid of an assistant, install the window assembly to the vehicle.

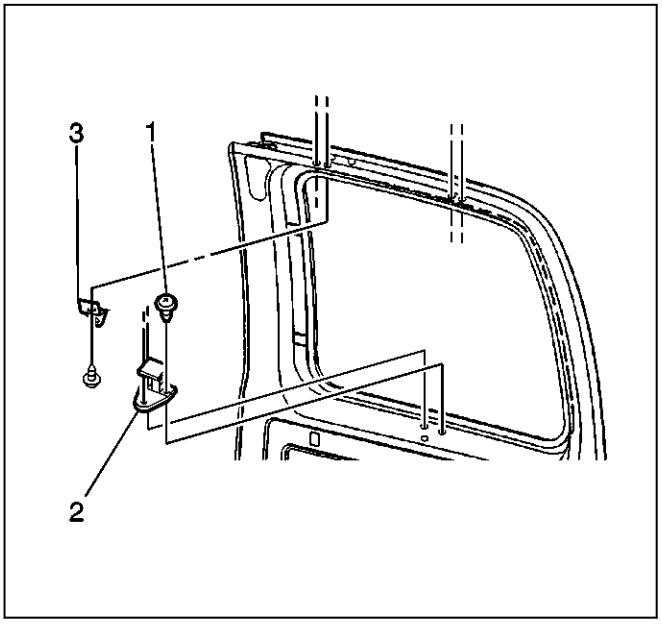

326818

2. Install the rivets that retain the hinge (3) to the door.
3. Install the rivets (1) that retain the latch to the door.
4. Connect the electrical connectors and install the wiring harness retainers as necessary.
5. Rear Door Trim Panel » Install
   - [Link target (target-id 149949-) not found]
   - [Link target (target-id 149950-) not found]

Rear Window Replacement

Special Tools

- *J 24402-A* Glass Sealant Remover (Cold Knife)
- *J 39032* Stationary Glass Removal Tool
- Use a urethane adhesive systems which meet GM Specification GM 3651G

Removal Procedure

Warning: Refer to [Link target (target-id 178022-) not found] .

Note: Before cutting out a stationary window, apply a double layer of masking tape around the perimeter of the painted surfaces and the interior trim.

1. Remove the rear door trim panels in order to gain access the rear window. Refer to [Link target (target-id 149949-) not found] and [Link target (target-id 149950-) not found] .

Warning: Refer to [Link target (target-id 178024-) not found] .

2. Cover to protect the following parts from broken glass:
   - The upper dash pad.
   - The defroster outlets and A/C outlets
   - The seats and carpeting.

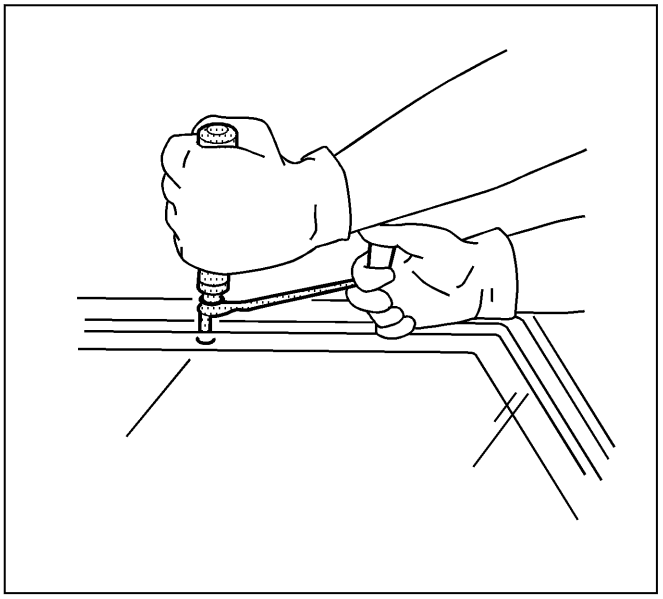

71179

Note: Keep the cutting edge of the tool against the window. This will allow the urethane adhesive to be separated from the window.

- Leave a base of urethane on the pinchweld flange.
- The only suitable lubrication is clear water.
- Use *J 24402-A* glass sealant remover (cold knife), *J 39032* stationary glass removal tool or equivalent in order to remove the window.

3. With the aid of an assistant, use the suction cups to lift the rear window from the opening.

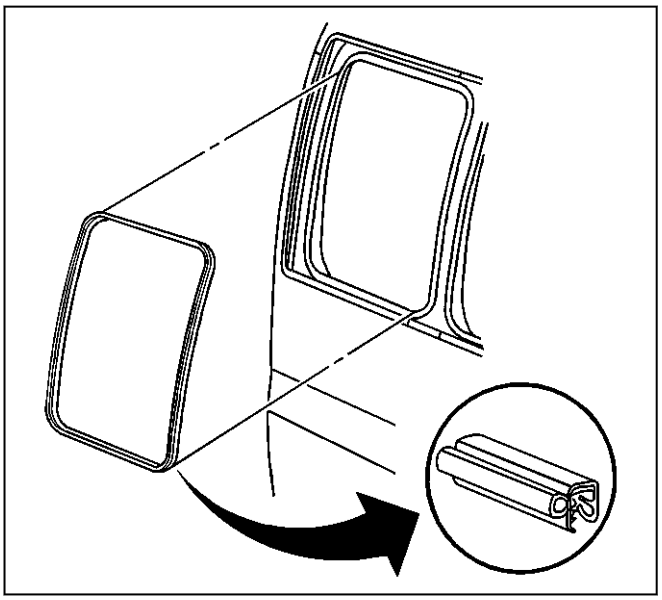

344497

4. Remove the stationary window.

Installation Procedure

1. Install a stationary window into the opening. Refer to *Adhesive Installation of Stationary Windows 1-24*.
2. Install the rear door trim panels which were removed in order to gain access to the rear window removal. Refer to [Link target (target-id 149949-) not found] and [Link target (target-id 149950-) not found] .
3. Remove the double layer of masking tape around the perimeter of the painted surfaces and the interior trim.

Door Window Regulator Handle Replacement

Tools Required

J 9886-01 Door Handle Clip Remover

Removal Procedure

1. Note the position of the door window regulator handle with the window in the full up position.
2. Place the door window regulator handle in the upward position.

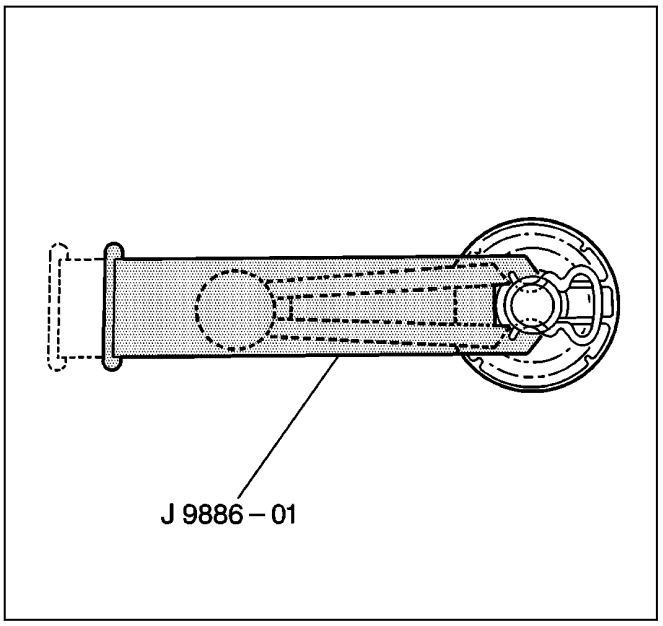

5087

3. Remove the spring clip by inserting *J 9886-01* door handle clip remover between the window regulator handle and the door window regulator handle bearing plate. Press down to remove the spring clip.
4. Remove the window regulator handle.
5. Remove the door window regulator handle bearing plate.

Installation Procedure

1. Position the window to the full up position.

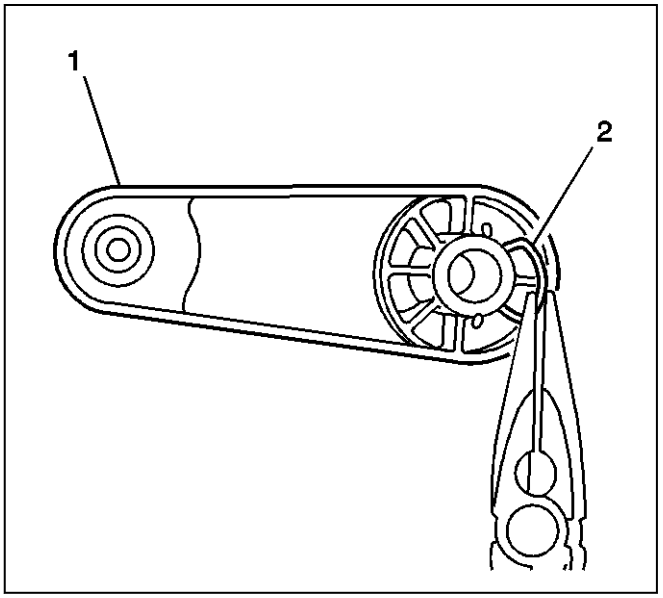

748354

2. Install the spring clip (2) to the door window regulator handle (1).
3. Install the door window regulator handle (1) bearing plate.

4. Position the door window regulator (1) handle to the regulator.
5. Install the door window regulator handle (1), press in until fully seated.

Front Side Door Window Module Replacement

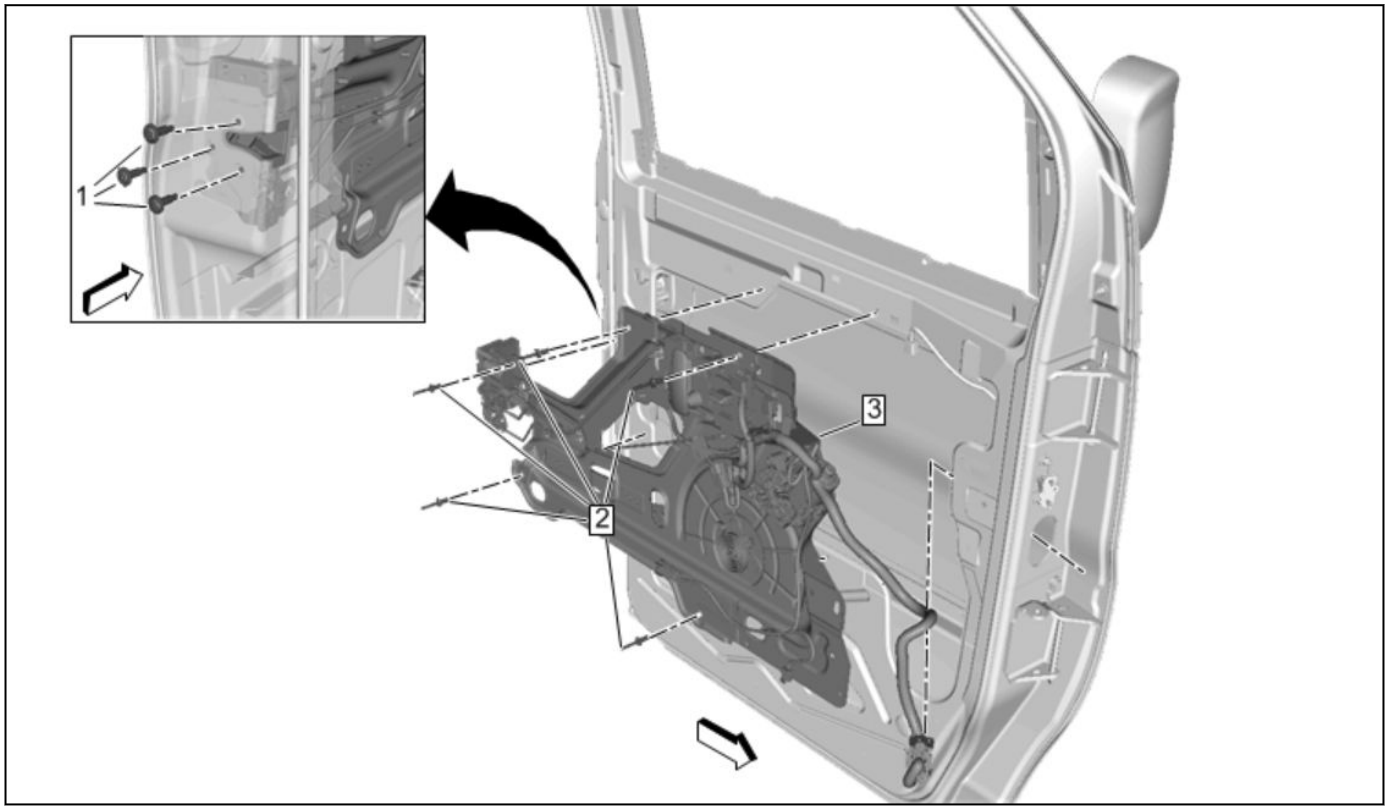

4848787

Front Side Door Window Module Replacement

Callout	Component Name
Preliminary Procedure 1. [Link target (target-id 51645-) not found] 2. *Front Side Door Window Channel Replacement - Lower Rear 1-38*	
1	Front Side Door Lock Screw [3x] **Caution:** Refer to [Link target (target-id 178169-) not found] . **Tighten** 10 newtonm (89 lb in)
2	Front Side Door Window Regulator Module Rivet [5x] **Caution:** Refer to [Link target (target-id 178036-) not found] .
3	Front Side Door Window Regulator Module **Procedure** 1. Front Side Door Lock Cylinder Rod » Disconnect 2. Front Side Door Outside Handle Rod » Disconnect 3. Disconnect all electrical connectors.

Front Side Door Window Switch Replacement

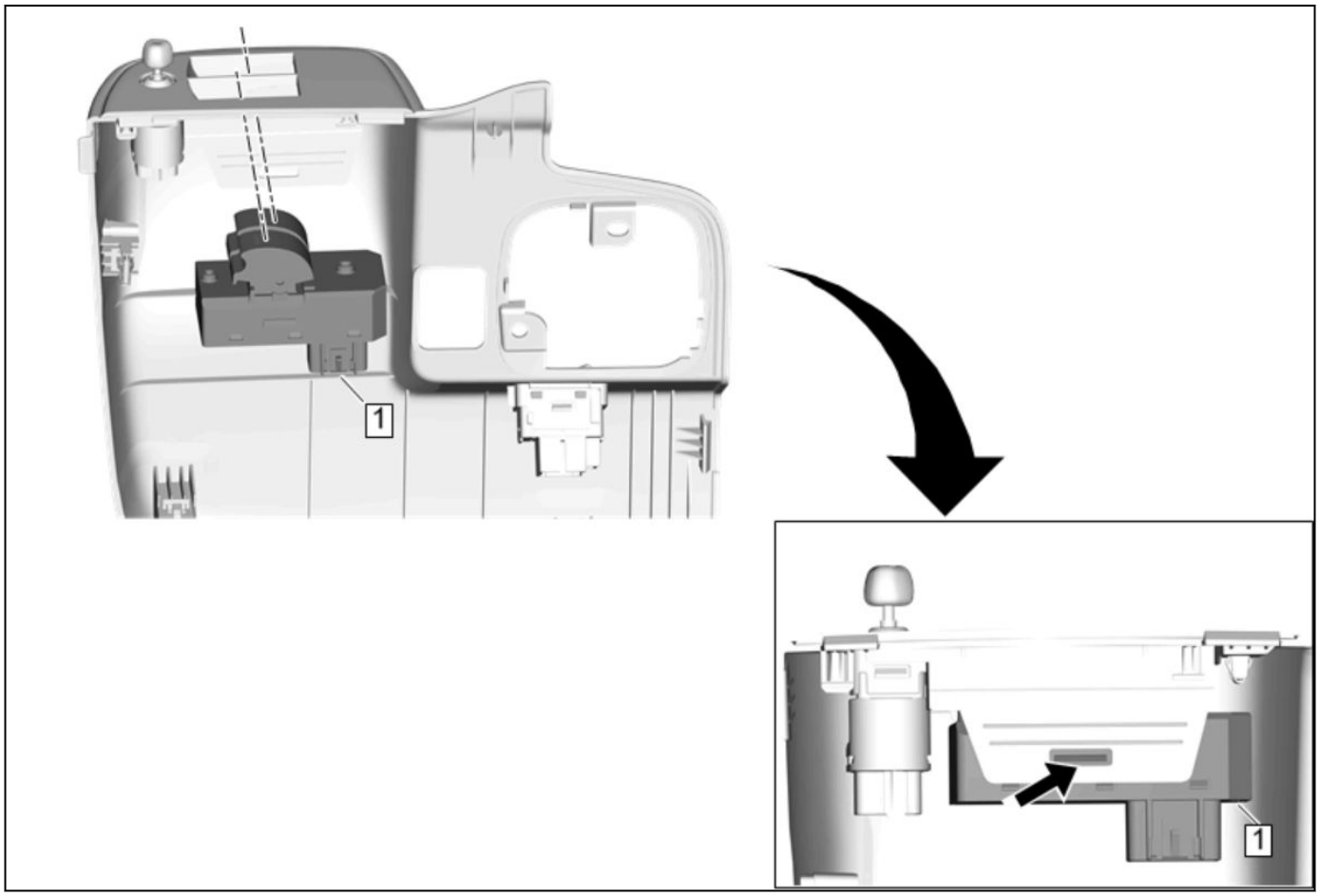

4862801

Front Side Door Window Switch Replacement

Callout	Component Name
Preliminary Procedure [Link target (target-id 149959-) not found]	
1	Front Side Door Window Switch **Procedure** From the backside of the front door trim plate, use a plastic trim tool to gently push in on the side tabs to release the switch from the front door trim plate.

Front Side Door Window Regulator Motor Replacement

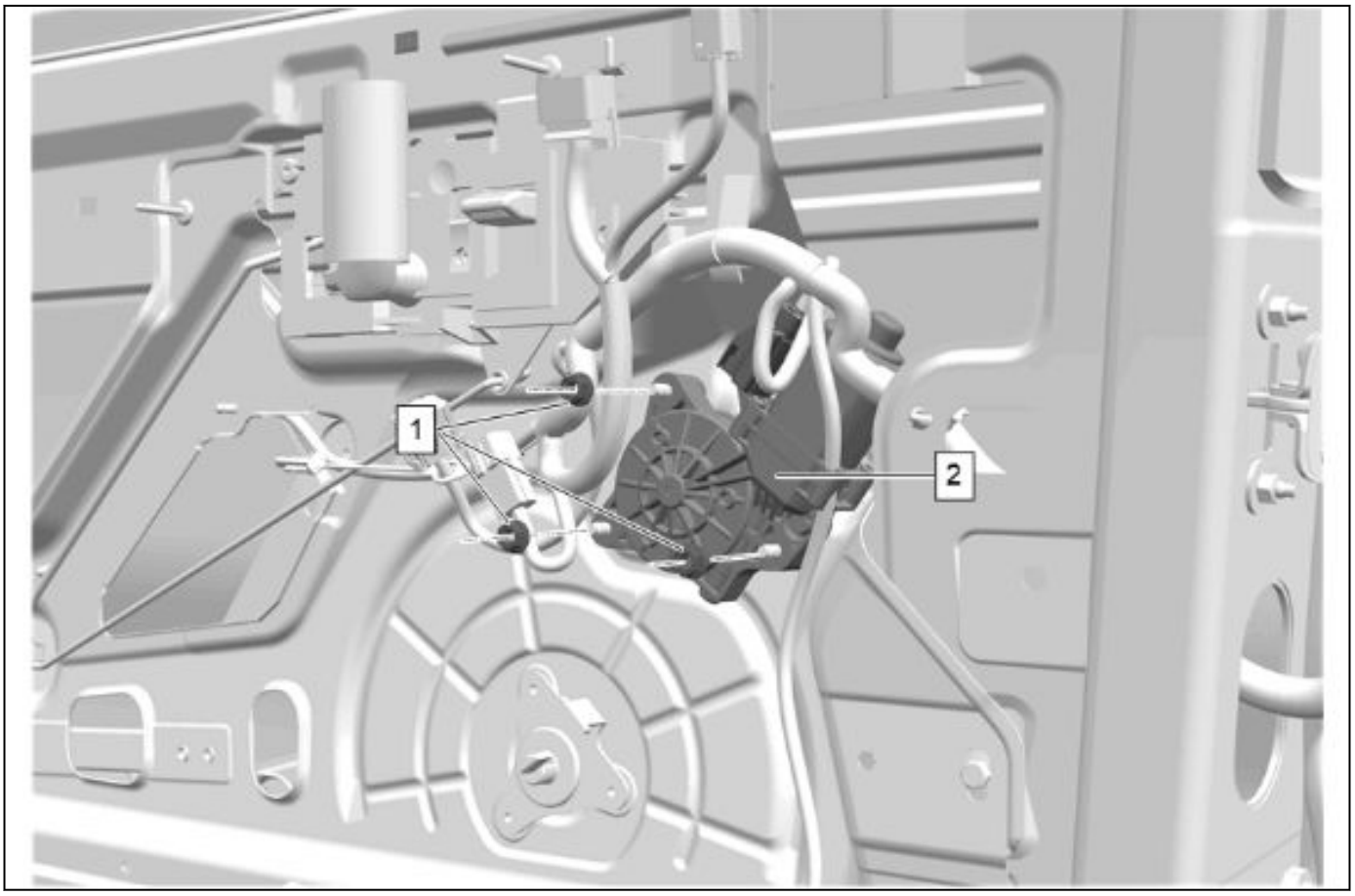

6100373

Front Side Door Window Regulator Motor Replacement

Callout	Component Name
Preliminary Procedure [Link target (target-id 149852-) not found]	
1	Front Side Door Window Regulator Motor Nut [3x] **Caution:** Refer to [Link target (target-id 178169-) not found] . **Tighten** 7 N•m (62 lb in)
2	Front Side Door Window Regulator Motor **Procedure** 1. Disconnect the electrical connector. 2. Remove the front side door window regulator motor.

Front Side Door Window Belt Inner Sealing Strip Replacement

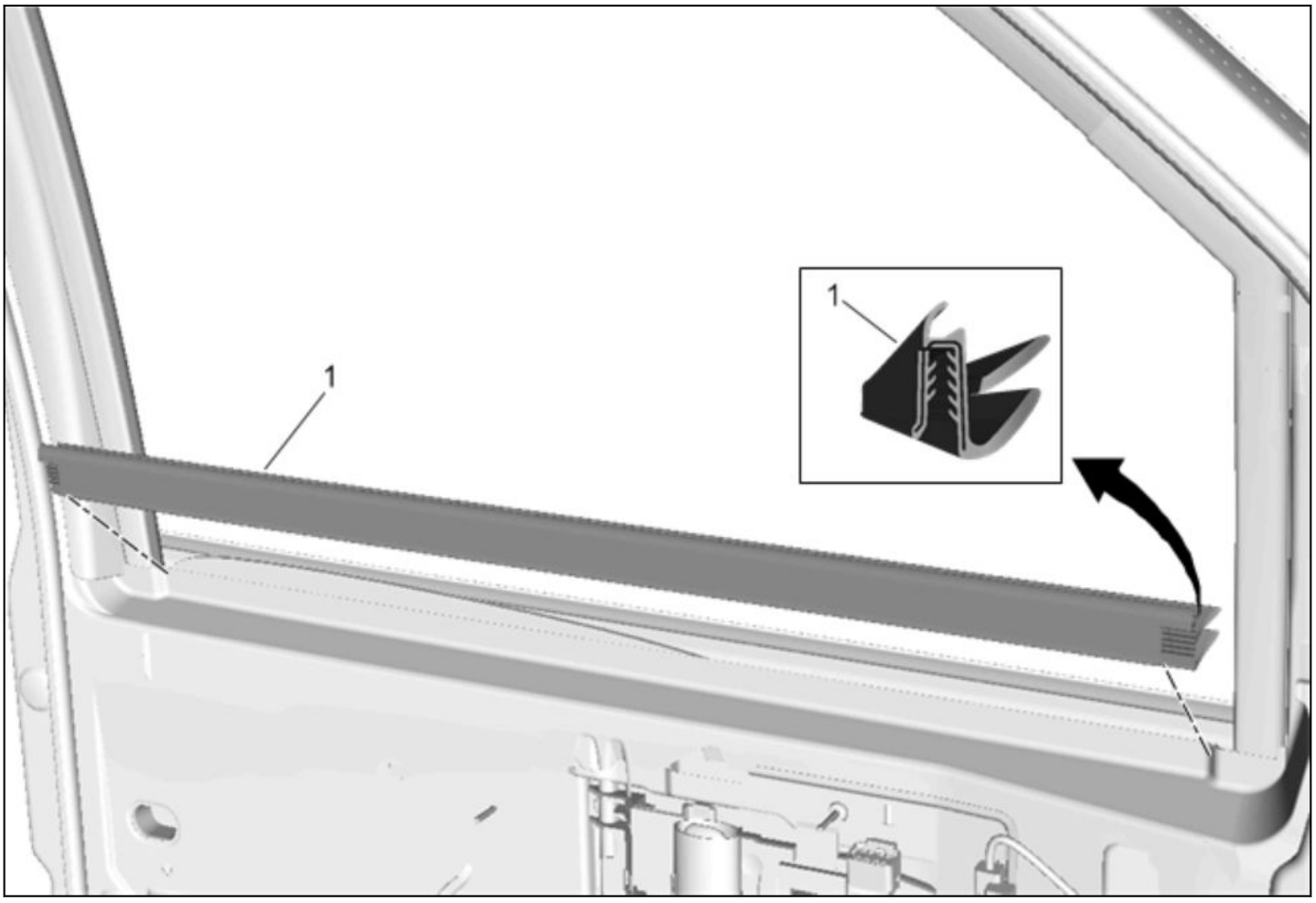

4847568

Front Side Door Window Belt Inner Sealing Strip Replacement

Callout	Component Name
Preliminary Procedures 1. Place the front door window in the full down position. 2. [Link target (target-id 149952-) not found]	
1	Front Side Door Window Belt Inner Sealing Strip

Front Side Door Window Belt Reveal Molding Replacement

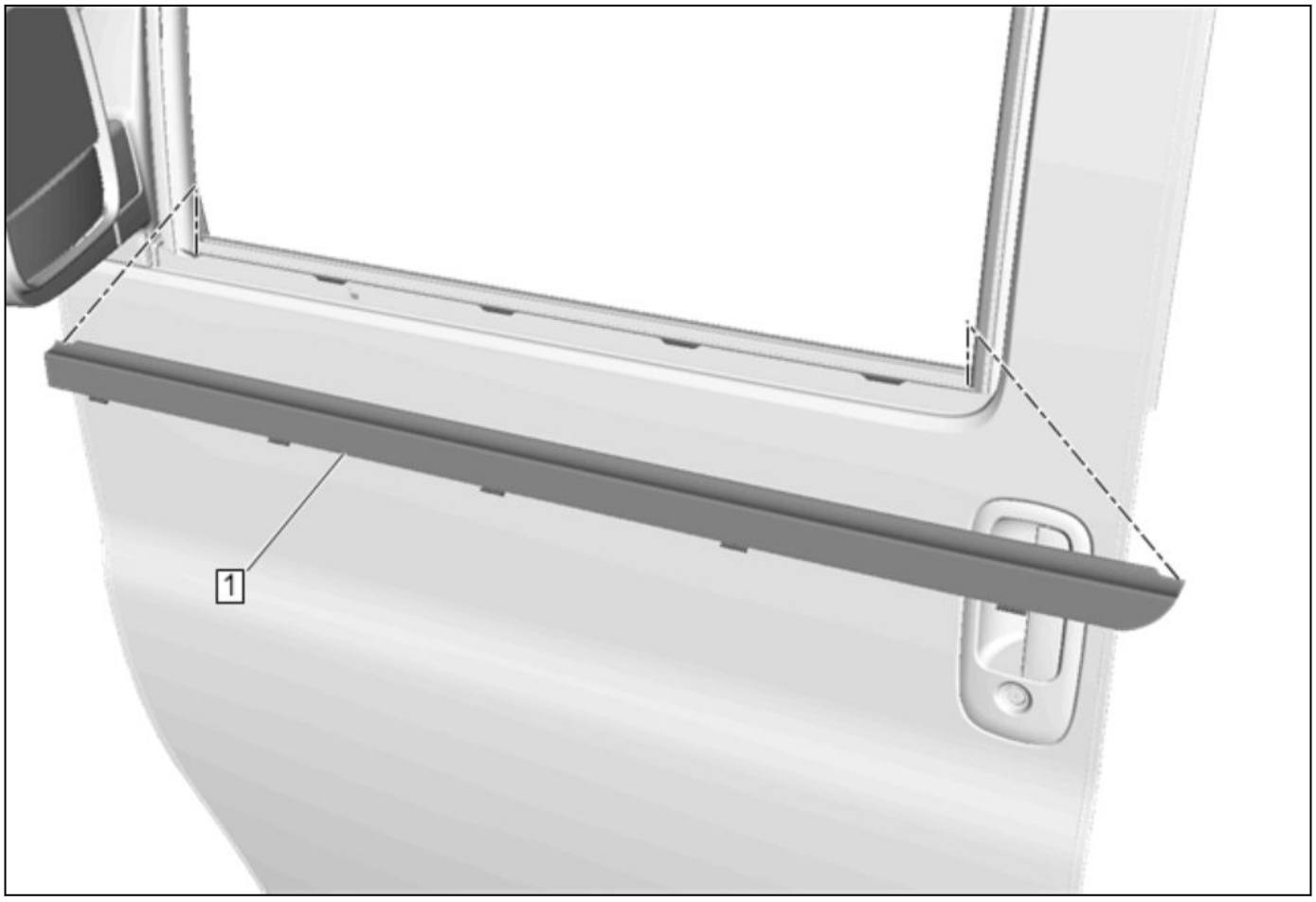

4847153

Front Side Door Window Belt Reveal Molding Replacement

Callout	Component Name
1	Front Side Door Window Belt Reveal Molding **Procedure** 1. Place the front door window in the full down position. 2. Apply masking tape to the outer applique and door frame. 3. Using the appropriate tool, lift the belt molding up to remove from the door flange. 4. Press firmly to insert the front side door window belt reveal molding back on the door flange. 5. Inspect the window for proper operation.

Intermediate Side Door Window Weatherstrip Replacement

Removal Procedure

1. Rear Side 60/40 Door Trim Panel » Remove— [Link target (target-id 149955-) not found]

Note: Only do the steps necessary to access the component being removed.

2. Body Side Window » Remove— *Body Side Window Replacement (Stationary) 1-10* *Body Side Window Replacement (Swing out) 1-11*

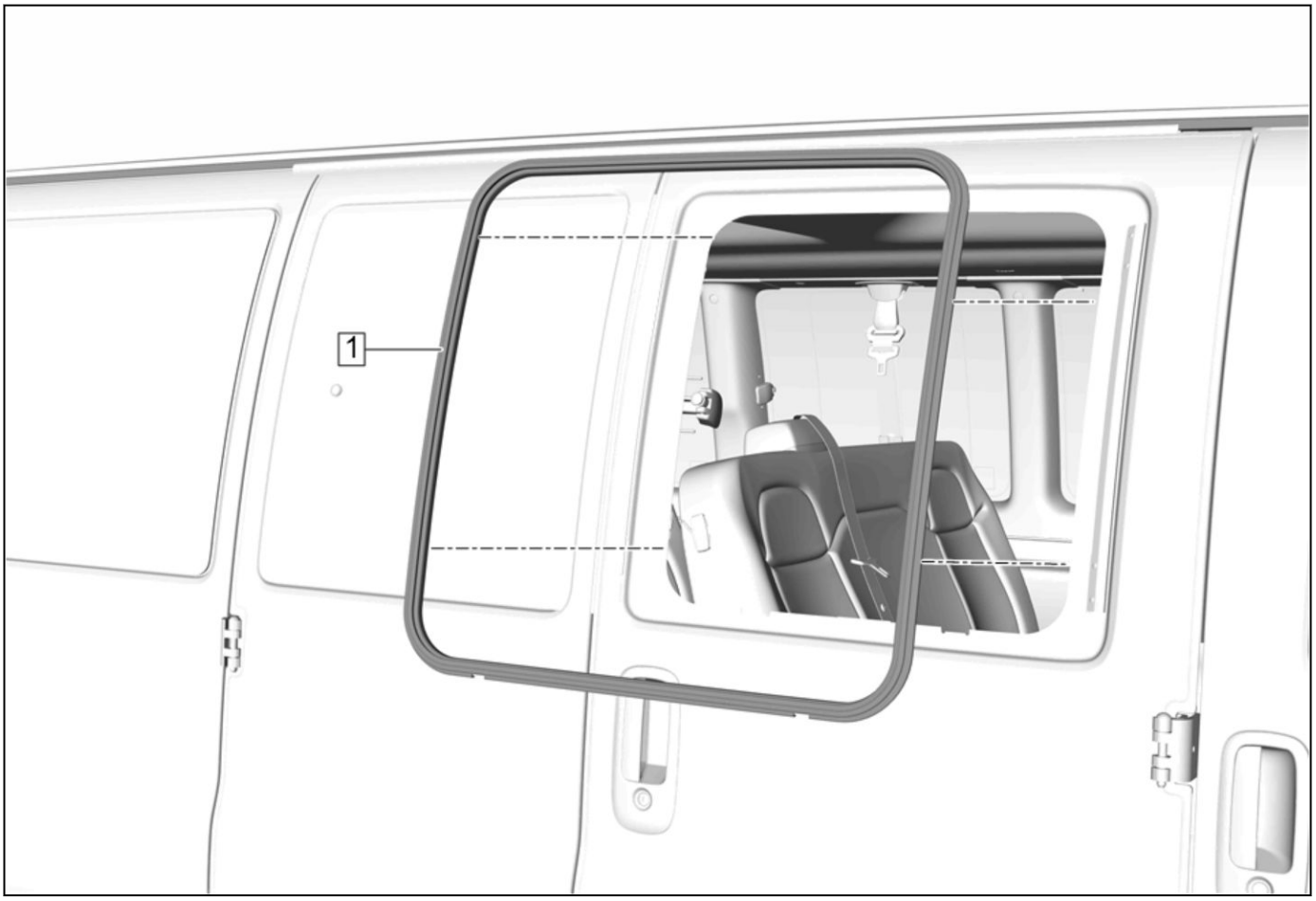

5182607

3. Pull the side door window weatherstrip (1) from the window opening pinch-weld flange and remove.

Installation Procedure

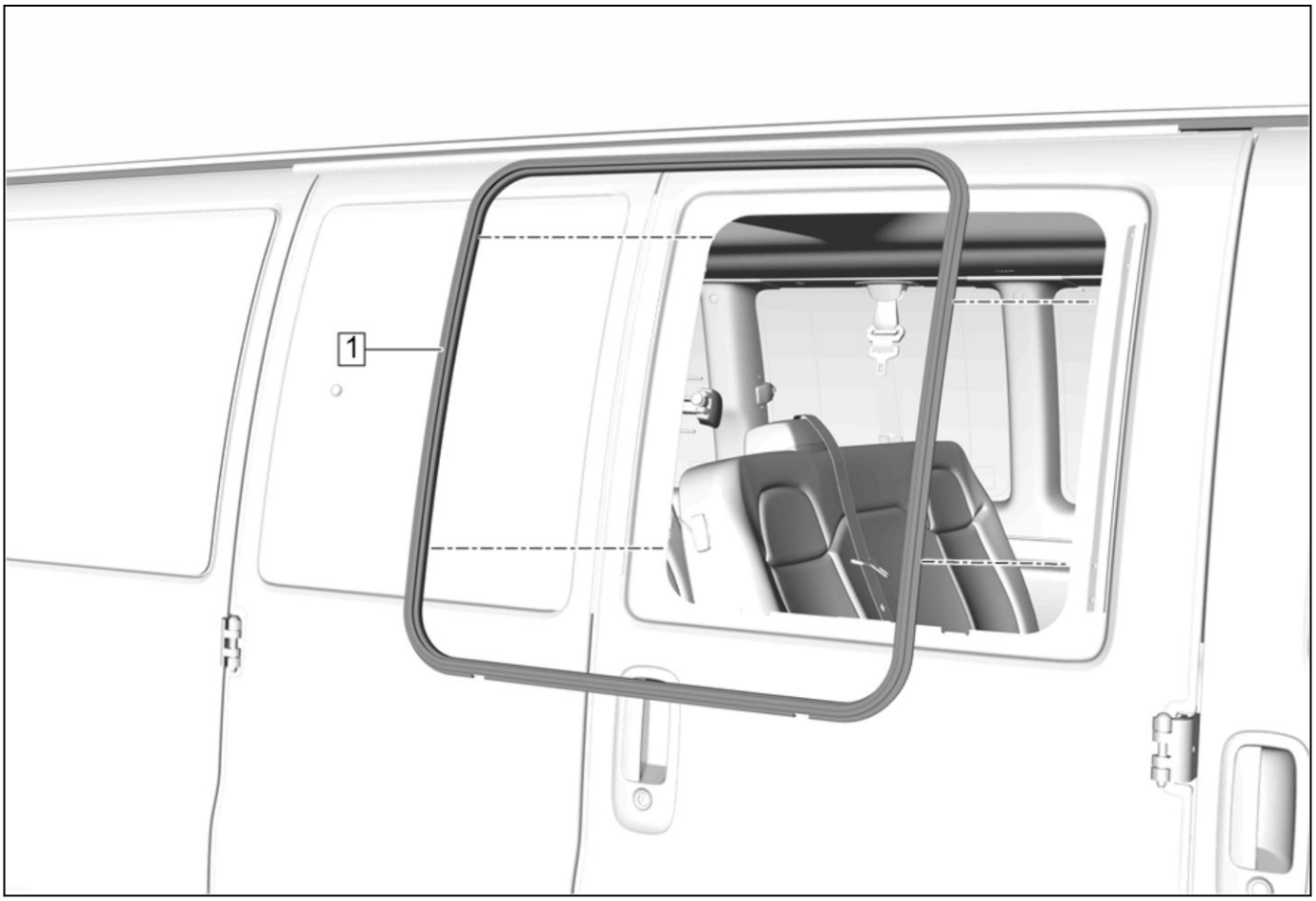

5182607

1. Install the side door window weatherstrip (1) to the window opening pinch-weld flange.
2. Press the side door window weatherstrip (1) into place.
3. Body Side Window » Install— *Body Side Window Replacement (Stationary) 1-10* *Body Side Window Replacement (Swing out) 1-11*
4. Rear Side 60/40 Door Trim Panel » Install— [Link target (target-id 149955-) not found]

Sliding Door Window Weatherstrip Replacement

Removal Procedure

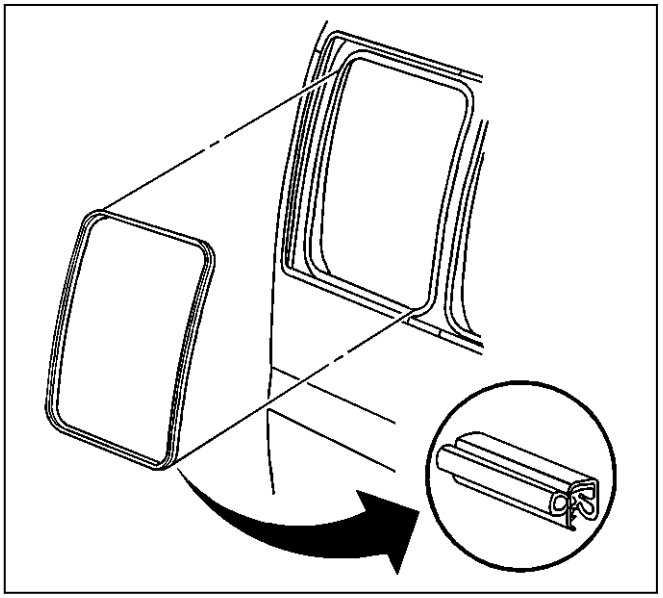

344497

1. Remove the sliding side door upper trim panel. Refer to [Link target (target-id 149956-) not found] .
2. Remove the hinged body side window. Refer to *Hinged Rear Window Replacement 1-14*.
3. Pull the sliding side door window weatherstrip from the window opening pinch-weld flange.
4. Remove the sliding side door window weatherstrip from the vehicle.

Installation Procedure

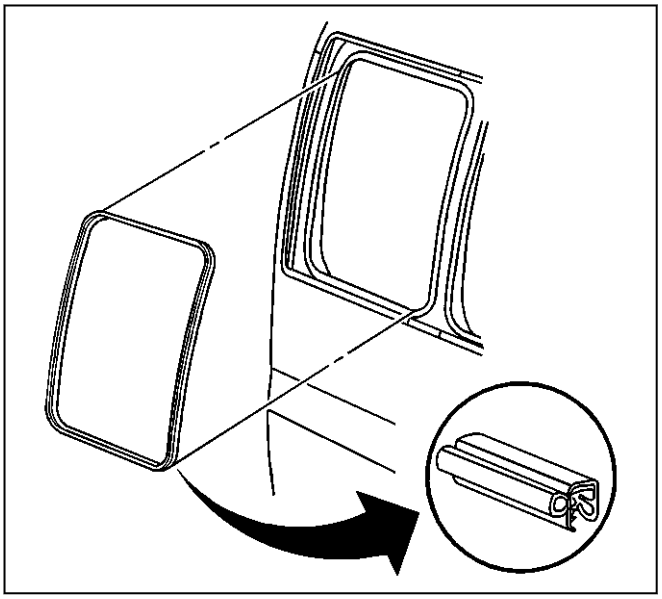

344497

1. Install the sliding side door window weatherstrip to the vehicle.
2. Align the channel on the sliding side door window weatherstrip with the pinch-weld flange.
3. Press the weatherstrip into place.
4. Install the hinged body side window. Refer to *Hinged Rear Window Replacement 1-14*.
5. Install the sliding side door upper trim panel. Refer to [Link target (target-id 149956-) not found] .

Adhesive Installation of Stationary Windows

1. Use a urethane adhesive systems which meet GM Specification GM 3651G

Warning: Refer to [Link target (target-id 178050-) not found] .

2. Remove all mounds or loose pieces of urethane adhesive from the pinch-weld area.
3. If the original window is being reused, remove all but approximately 2 mm (3/64 in) of the existing bead of urethane adhesive from the pinch-weld flange surface by using a clean utility knife or razor blade scraper.
4. Inspect for any of the following problems in order to help prevent future breakage of the window:
   - High weld
   - Solder spots on the pinch-weld
   - Hardened sealer
   - Any other obstruction or irregularity in the pinch-weld flange

Note: If corrosion of the pinch-weld flange is present or if sheet metal repairs or replacements are required, the pinch-weld flange must be refinished in order to restore the bonding area strength. If paint repairs are required, mask the flange bonding area prior to applying the color coat in order to provide a clean primer only surface. Materials such as BASF DE15®, DuPont 2610®, Sherwin-Williams PSE 4600 and NP70® and Martin-Semour 5120 and 5130® PPG DP90LF SPIES/HECKER 3688/8590 – 3688/5150 – 4070/5090 STANDOX 11158/13320 – 14653/14980 products are approved for this application.

5. After repairing the opening as indicated, perform the following steps:
   5.1. Remove all traces of broken window from the outer cowl panel, seats, floor and defroster ducts.
   5.2. Clean around the edge of the inside surface of the window with a 50/50 mixture of isopropyl alcohol and water by volume on a dampened lint-free cloth.
6. Shake the pinch-weld primer black #3 for at least 1 minute.

Warning: Failure to prep the area prior to the application of primer may cause insufficient bonding of urethane adhesive. Insufficient bonding of urethane adhesive may allow unrestrained occupants to be ejected from the vehicle resulting in personal injury.

Warning: Refer to [Link target (target-id 178108-) not found] .

Note: Do not apply the black #3 primer to the existing bead (1) of the urethane adhesive on the pinch-weld flange. Apply the primer only to nicks, scratches or the primed surfaces.

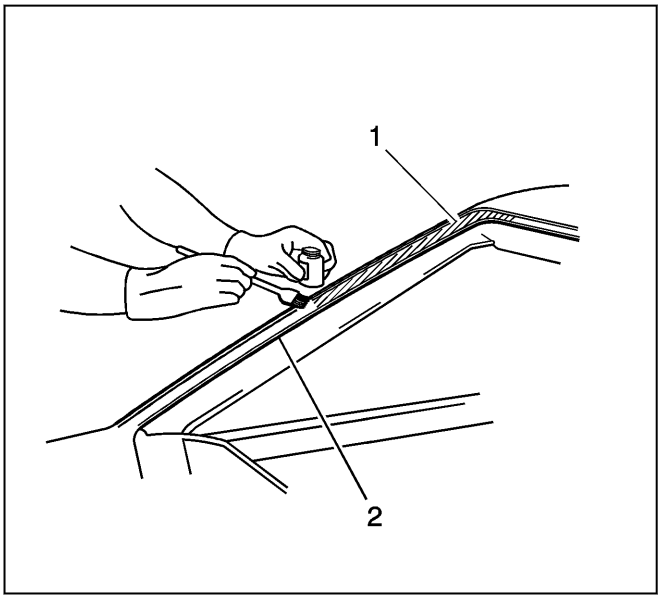

245283

7. Verify all primers and urethane adhesive are within expiration dates.
8. Use a new dauber in order to apply the primer to the surface of the pinch-weld flange (2).
9. Allow the pinch-weld primer to dry for approximately 10 minutes.
10. Position the locator pins on the window into the upper sheet metal slots in order to hold the window in place.
11. With the aid of an assistant, dry fit the window (1) to the opening in order to determine the correct position.

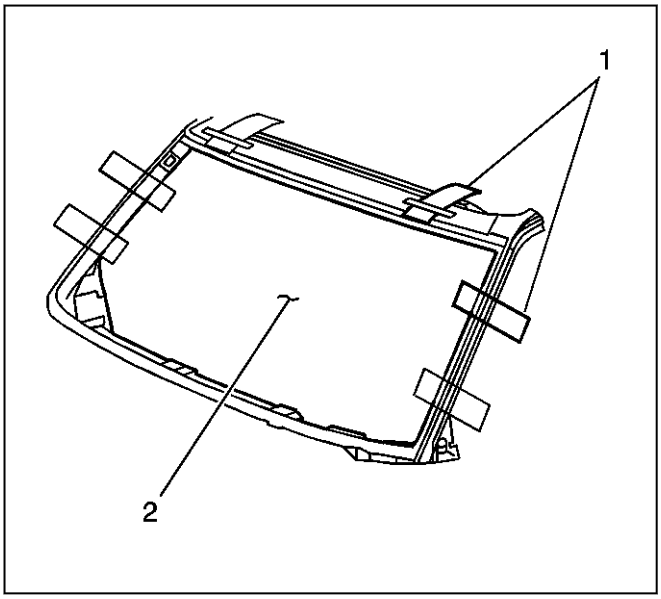

745571

12. Use masking tape in order to mark the locations (1) of the window (2) in the opening.
13. Cut the masking tape in the center and remove the window from the opening.

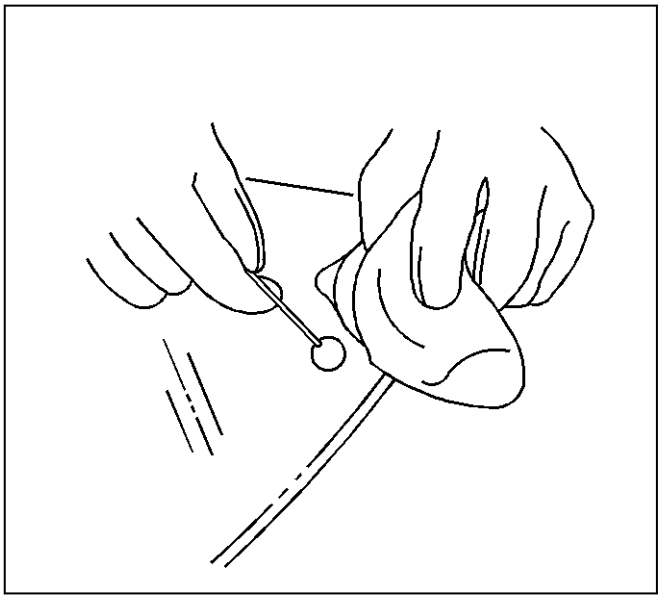

379890

Note: Use care when applying window prep clear #1 on the window. This primer dries almost instantly, and may stain the viewing area of the window if not applied evenly.

14. Use a new dauber in order to apply window prep clear #1 to the area approximately 10–16 mm (3/8–5/8 in) around the entire perimeter of the window inner surface.

    Immediately wipe the window primed area using a clean, lint-free cloth.

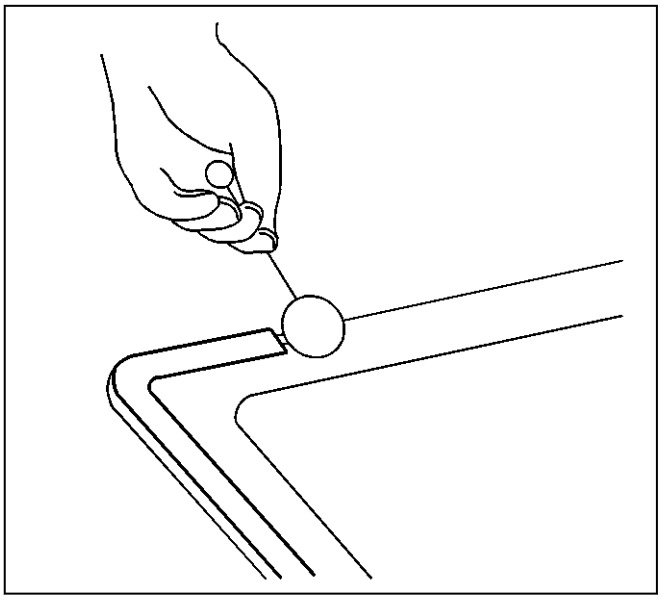

161424

15. Apply a second coat of the window prep clear #1 to the same area of the window.

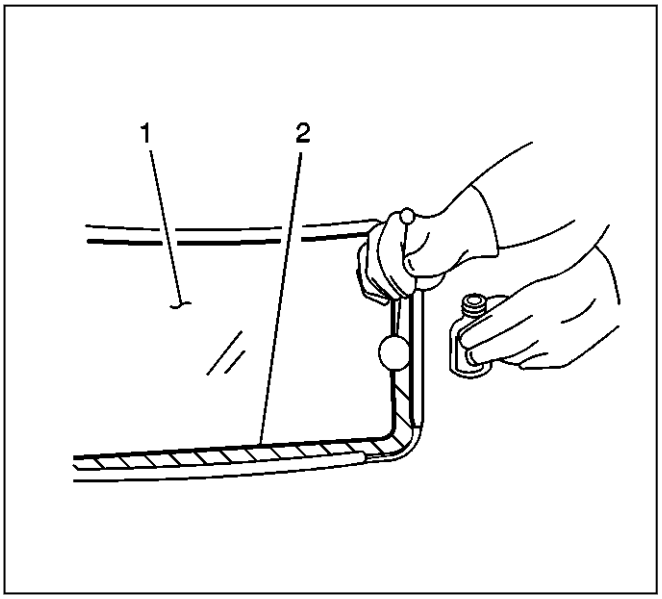

245290

Note: The window primer black #2 is effective up to 8 hours after applying it to the window. The primed surface of the window must be kept clean.

16. Shake the window primer black #2 for at least 1 minute.
17. Use a new dauber in order to apply the window primer black #2 to the same areas (2) that window prep clear #1 was applied.
18. Allow the window primer to dry for approximately 10 minutes.

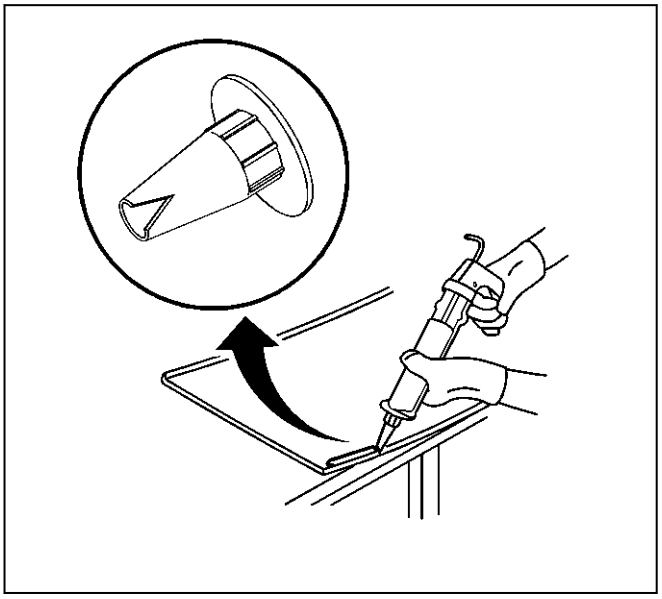

161427

19. Cut the applicator nozzle in order to provide a bead of 13 mm (1/2 in) wide and 13 mm (1/2 in) high.

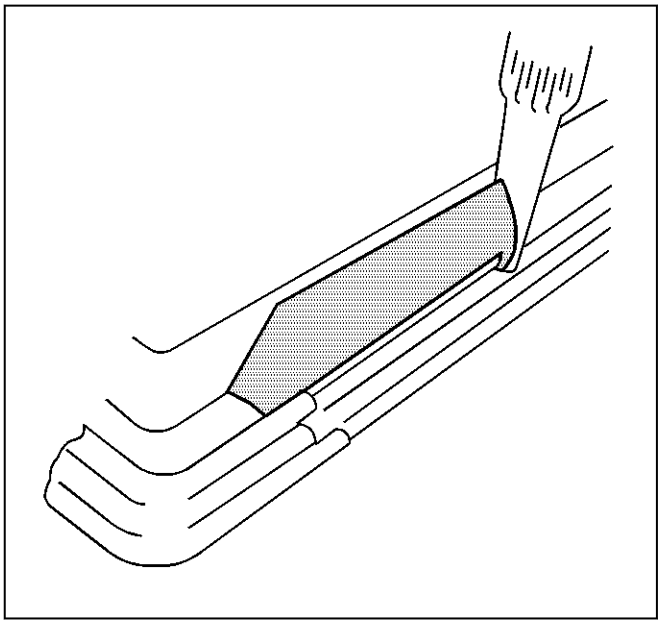

161429

20. Use a cartridge-type caulking gun in order to apply a smooth, continuous bead of urethane adhesive.

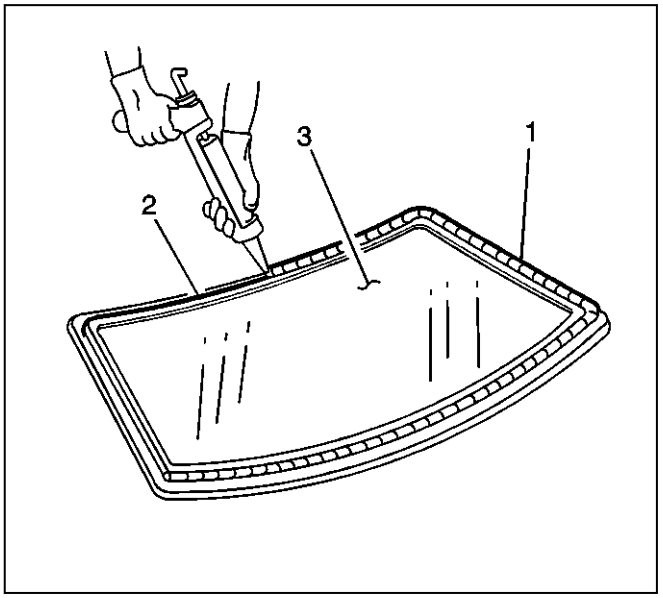

245315

21. Use the edge of the window (1) as a guide for the nozzle in order to apply the urethane adhesive (2) to the inner surface of the window (3).

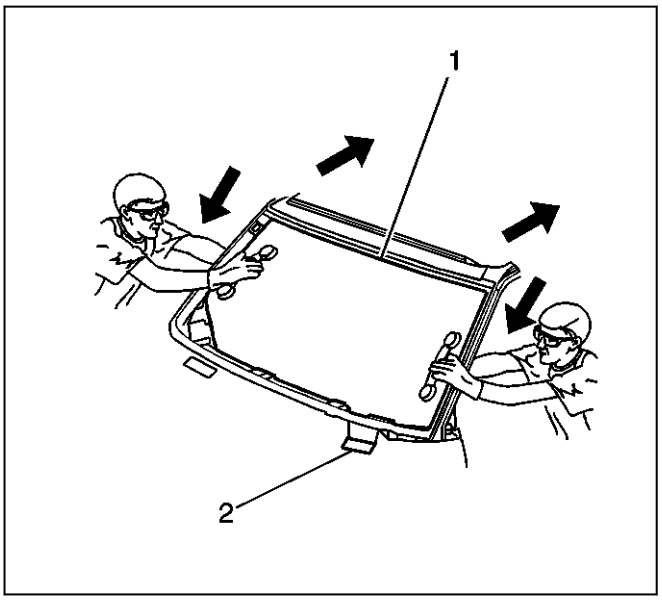

745570

Note: If the locator pins were damage when removing it will be necessary to tape the window in place until chemical-curing for the type of urethane adhesive used.

22. Place the window on the lower supports (2), if equipped with the aid of an assistant, place the window in the opening ensuring that the locator pins on the window align with the upper sheet metal slots in order to hold the window in place.

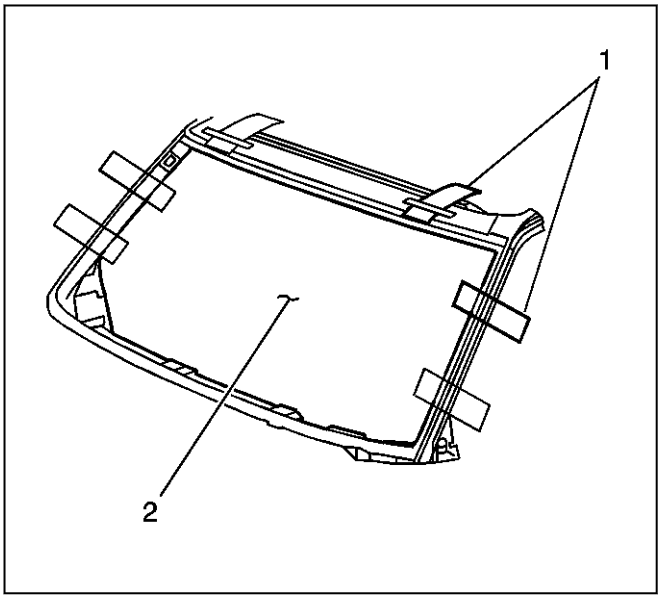

745571

23. Align the masking tape (1) lines on the window (2) and the body.

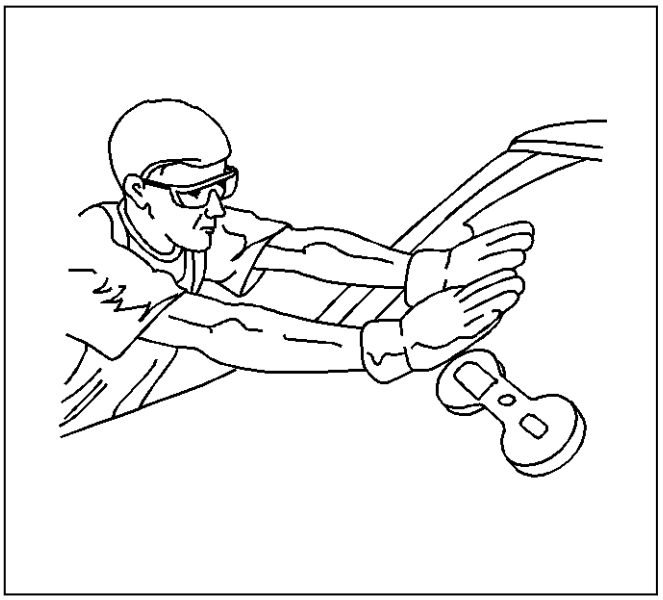

706204

24. Press the window firmly into place.
25. Tape the window to the body in order to minimize movement until the urethane adhesive cures.

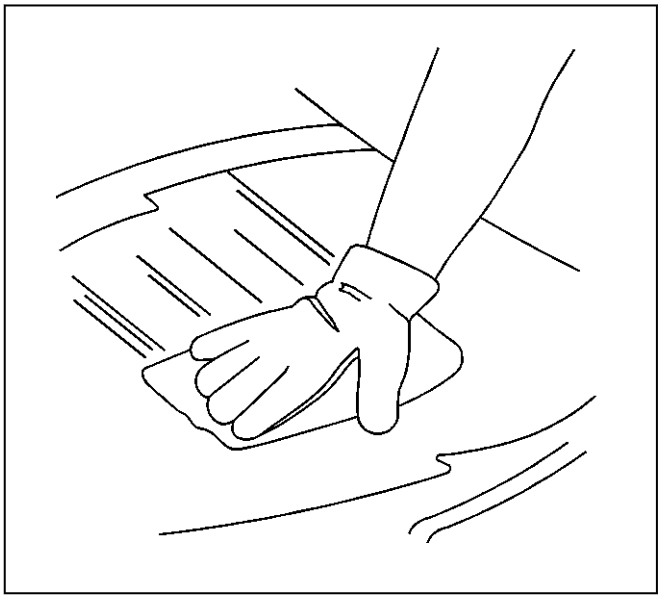

706194

26. Clean any excess urethane adhesive from the body.

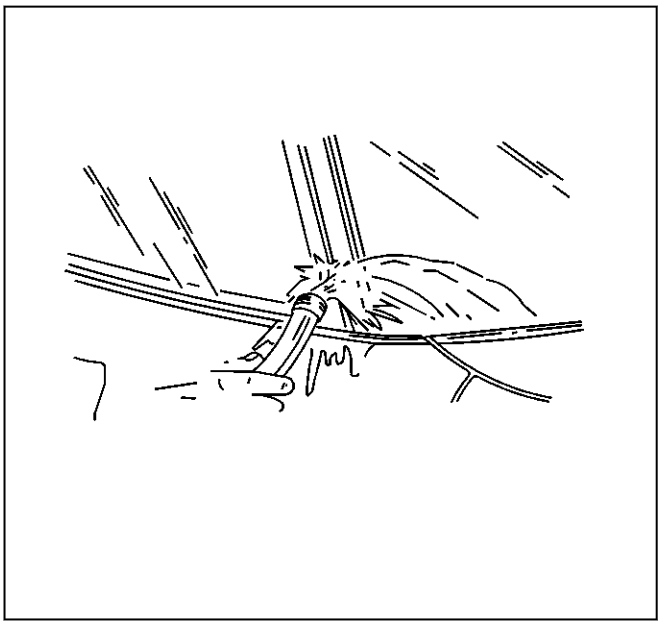

95572

Note: Do not direct a hard stream of high pressure water to the freshly applied urethane adhesive.

27. Use a soft spray of warm water in order to immediately water test the window.
28. Inspect the window for leaks.
29. If any leaks are found, use a plastic paddle in order to apply extra urethane adhesive at the leak point.
30. Retest the window for leaks.

Warning: Insufficient curing of urethane adhesive may allow unrestrained occupants to be ejected from the vehicle resulting in personal injury.

- ***For the moisture-curing type of urethane adhesive, allow a minimum of 6 hours at 21°C (70°F) or greater and with at least 30 percent relative humidity. Allow at least 24 hours for the complete curing of the urethane adhesive.***
- ***For the chemical-curing type of urethane adhesive, allow a minimum of 1 hour .***

Do NOT physically disturb the repair area until after these minimum times have elapsed.

31. Maintain the following conditions in order to properly cure the urethane adhesive:
    - Partially lower a door window in order to prevent pressure buildups when closing doors before the urethane adhesive cures.
    - Do not drive the vehicle until the urethane adhesive is cured. Refer to the above curing times.
    - Do not use compressed air in order to dry the urethane adhesive.
32. Complete the window installation.

Adhesive Installation of Windshields

Warning: Refer to [Link target (target-id 178050-) not found] .

1. Use a urethane adhesive system which meet the FMVSS 212 crash test standard, suitable for structural glass bonding.
2. Remove all mounds or loose pieces of urethane adhesive from the pinch-weld area.
3. If the original windshield is being reused, remove all but approximately 2 mm (3/64 in) of the existing bead of urethane adhesive from the pinch-weld flange surface and windshield by using a clean utility knife or razor blade scraper.
4. Inspect for any of the following problems in order to help prevent future breakage of the windshield:
    - High weld
    - Solder spots
    - Hardened sealer
    - Any other obstruction or irregularity in the pinch-weld flange

Note: If corrosion of the pinch-weld flange is present or if sheet metal repairs or replacements are required, the pinch-weld flange must be refinished in order to restore the bonding area strength. If paint repairs are required, mask the flange bonding area prior to applying the color coat in order to provide a clean primer only surface. Materials such as BASF DE15®, DuPont 2610®, Sherwin-Williams PSE 4600 and NP70® and Martin-Semour 5120 and 5130® PPG DP90LF SPIES/HECKER 3688/8590 – 3688/5150 – 4070/5090 STANDOX 11158/13320 – 14653/14980 products are approved for this application.

5. After repairing the opening as indicated, perform the following steps:
    5.1. Remove all traces of broken glass from the outer cowl panel, seats, floor, and defroster ducts.
    5.2. Clean around the edge of the inside surface of the windshield with a 50/50 mixture of isopropyl alcohol and water by volume on a dampened lint free cloth.

Warning: Refer to [Link target (target-id 178108-) not found] .

Note: Follow primer and adhesive manufacturer recommendations.

6. Verify all primers and urethane adhesive are within expiration dates.

Warning: Failure to prep the area prior to the application of primer may cause insufficient bonding of urethane adhesive. Insufficient bonding of urethane adhesive may allow unrestrained occupants to be

ejected from the vehicle resulting in personal injury.

Note: Do not apply the black primer to the existing bead of the urethane adhesive on the pinch-weld flange. Apply the primer only to nicks, scratches, or the primed surfaces.

7. Shake the pinch-weld primer black for at least 1 minute.
8. Use a new dauber in order to apply the primer to the surface of the pinch-weld flange.
9. Allow the pinch-weld primer to dry for approximately 10 minutes.
10. With an assistant, dry fit the windshield to the opening in order to determine the correct position.
11. If equipped, ensure that the windshield locator pins are positioned into the locator slots on the upper pinch-weld flange.

    Ensure that the windshield spacers stay in place when removing the windshield.
12. Use masking tape in order to mark the locations of the windshield in the opening.
13. Cut the masking tape in the center and remove the windshield from the opening.

Note: Use care when applying glass prep clear on the windshield. This primer dries almost instantly, and may stain the viewing area of the windshield if not applied evenly.

14. Use a new dauber in order to apply glass prep clear to the area approximately 18 mm (0.71 in) around the entire perimeter of the windshield inner surface.

    Immediately wipe the glass primed area using a clean, lint-free cloth.
15. Apply a second coat of the glass prep clear to the same area of the glass.

Note: The glass primer black is effective up to 8 hours after applying it to the glass. The primed surface of the glass must be kept clean.

16. Shake the glass primer black for at least 1 minute.
17. Use a new dauber in order to apply the glass primer black to the same areas that glass prep clear was applied.
18. Allow the glass primer to dry for approximately 10 minutes.
19. Cut the applicator nozzle in order to provide a minimum urethane bead of 8 mm (0.31 in) wide and 16 mm (0.63 in) high.
20. Use a cartridge-type caulking gun in order to apply a smooth, continuous bead of urethane adhesive.
21. Use the edge of the windshield as a guide for the nozzle in order to apply the urethane adhesive to the inner surface of the windshield.
22. With an assistant, install the locator pins and the windshield in the opening.
23. Align the masking tape lines on the windshield and the body.

Note: To prevent damage to the windshield due to objects impacting an exposed edge, upon installation, the windshield must rest 1 mm (0.04 in) below the surface of the sheet metal.

24. Press firmly around the entire periphery of the windshield in order to wet-out the urethane bead.
25. Tape the windshield to the body in order to minimize movement until the urethane adhesive cures.
26. Clean any excess urethane adhesive from the body.

Note: Do not direct a hard stream of high pressure water to the freshly applied urethane adhesive.

27. Use a soft spray of warm water in order to immediately water test the windshield.
28. Inspect the windshield for leaks.
29. If any leaks are found, use a plastic paddle in order to apply extra urethane adhesive at the leak point.
30. Retest the windshield for leaks.

Warning: Insufficient curing of urethane adhesive may allow unrestrained occupants to be ejected from the vehicle resulting in personal injury.

- ***For the moisture-curing type of urethane adhesive, allow a minimum of 6 hours at 21°C (70°F) or greater and with at least 30 percent relative humidity. Allow at least 24 hours for the complete curing of the urethane adhesive.***
- ***For the chemical-curing type of urethane adhesive, allow a minimum of 1 hour .***

Do NOT physically disturb the repair area until after these minimum times have elapsed.

31. Maintain the following conditions in order to properly cure the urethane adhesive:
    - Partially lower a door window in order to prevent pressure buildups when closing doors before the urethane adhesive cures.
    - Do not drive the vehicle until the urethane adhesive is cured. Refer to the above curing times.
    - Do not use compressed air in order to dry the urethane adhesive.
32. Complete the windshield installation.

Adhesive Installation of Bodyside Stationary Windows

1. Use a urethane adhesive systems which meet GM Specification GM 3651G

Warning: Refer to [Link target (target-id 178050-) not found] .

2. Remove all mounds or loose pieces of urethane adhesive from the pinchweld area.
3. If the original window is being reused, remove all but approximately 2 mm (0.078 in) of the existing bead of urethane adhesive from the pinchweld flange surface by using a clean utility knife or razor blade scraper.
4. Inspect the pinchweld flange area for the cause of a broken window.

Note: If corrosion of the pinchweld flange is present or if sheet metal repairs or replacements are required, the pinchweld flange must be refinished in order to restore the bonding area strength. If paint repairs are required, mask the flange bonding area prior to applying the color coat in order to provide a clean primer only surface. Materials such as BASF DE17®, DuPont 2610®, Sherwin-Williams PSE 4600 and NP70® and Martin-Semour 5120 and 5130® PPG DP90LF SPIES/ HECKER 3688/8590 – 3688/5150 – 4070/5090 STANDOX 11158/13320 – 14653/14980 products are approved for this application.

5. After repairing the opening as indicated, perform the following steps:
   - 5.1. Remove all traces of broken glass from the seats, floor and/or defroster ducts, if applicable.
   - 5.2. Clean around the edge of the inside surface of the window with a 50/50 mixture of isopropyl alcohol and water by volume on a dampened lint free cloth.
   - 5.3. Allow the isopropyl alcohol to dry completely before applying the primers.

Warning: Refer to [Link target (target-id 178108-) not found] .

6. Verify all primers and urethane adhesive are within expiration dates.

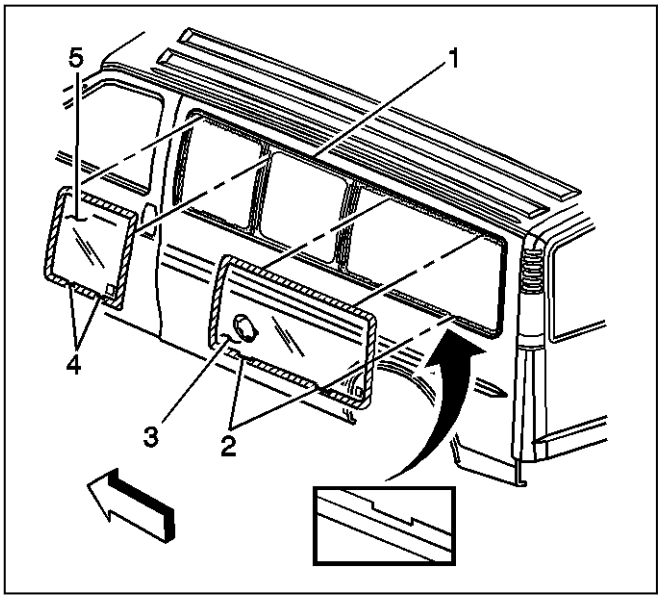

783819

Warning: Refer to [Link target (target-id 178037-) not found] .

Note: Do not apply the (black #3) primer to the existing bead (1) of the urethane adhesive on the pinchweld flange. Apply the primer only to nicks, scratches or the primed surfaces.

7. Shake the pinchweld primer (black #3) for at least 1 minute.
8. Use a new dauber in order to apply the primer to the surface of the pinchweld flange (1).
9. Allow the pinchweld primer to dry for approximately 10 minutes.
10. With the aid of an assistant dry fit the window (3, 5) to the opening in order to determine the correct position.
11. Ensure the locators (2, 4) are positioned into the locator slots on the lower pinchweld flange.
12. Center the glass side to side into the body opening.

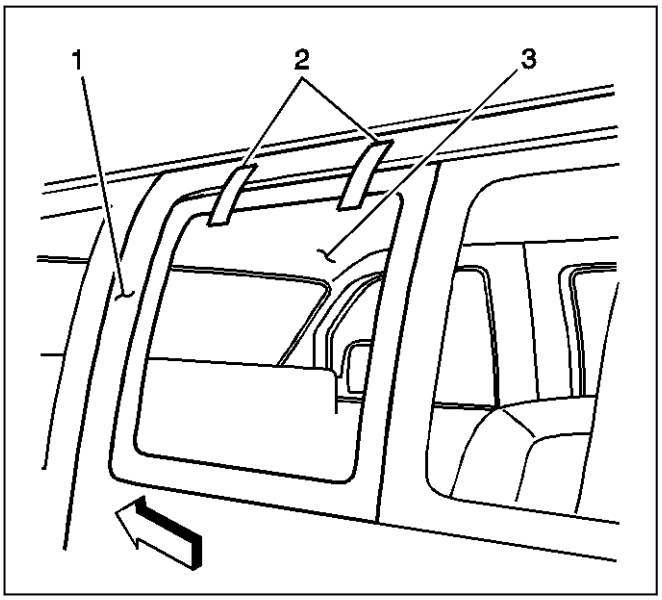

784645

13. Use masking tape (2) in order to mark the locations of the bodyside window in the opening.
14. Cut the masking in the center and remove the bodyside window (3) from the opening.

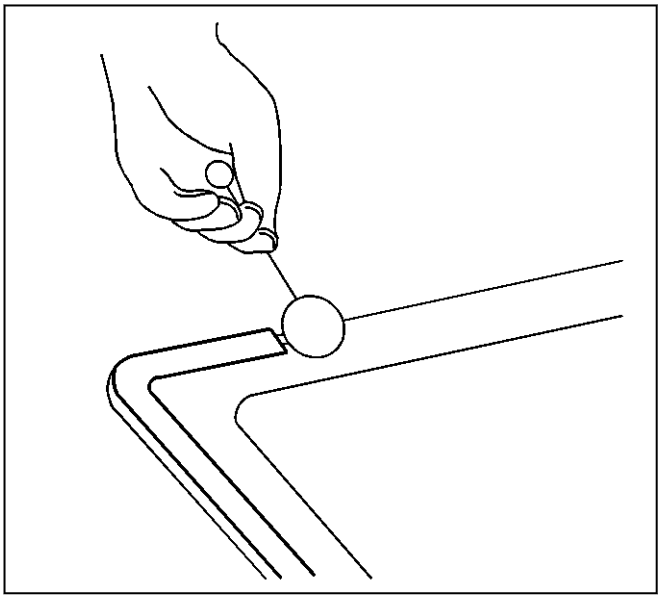

161424

Note: Use care when applying glass prep (clear #1) on the window. This primer dries almost instantly, and may stain the viewing area of the window if not applied evenly.

15. Use a new dauber in order to apply glass prep (clear #1) to the area approximately 10–16 mm (3/8–5/8 in) around the entire perimeter of the window inner surface.

    Immediately wipe the glass primed area using a clean, lint-free cloth.

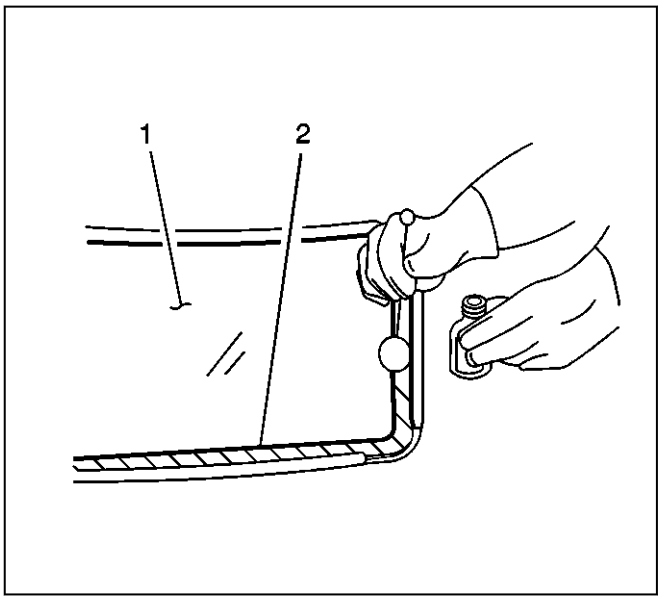

245290

Note: The glass primer (black #2) is effective up to 8 hours after applying it to the glass. The primed surface of the glass must be kept clean.

16. Shake the glass primer (black #2) for at least 1 minute.
17. Use a new dauber in order to apply the glass primer (black #2) to the same areas (2) that glass prep (clear #1) was applied.
18. Allow the glass primer to dry for approximately 10 minutes.

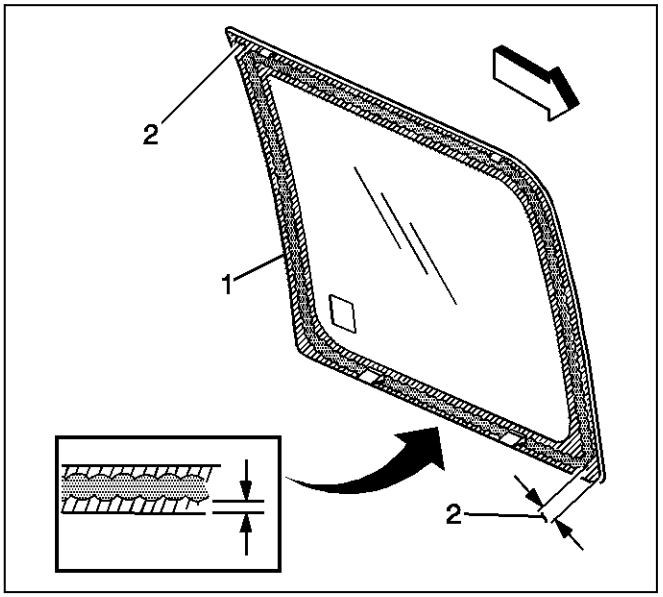

796198

Note: Measure a distance of 14–17 mm (0.551– 0.669 in) inward, from the top, bottom and side edges of the window (1) in order to apply the urethane bead onto the window.

19. When applying around the radius edges of the window (2), measure a distance of 17–22 mm (0.669–0.866 in) inward, for the radius edges only.

    Use the measurements as a guide in order to apply the urethane adhesive bead to the blackout area of the window.

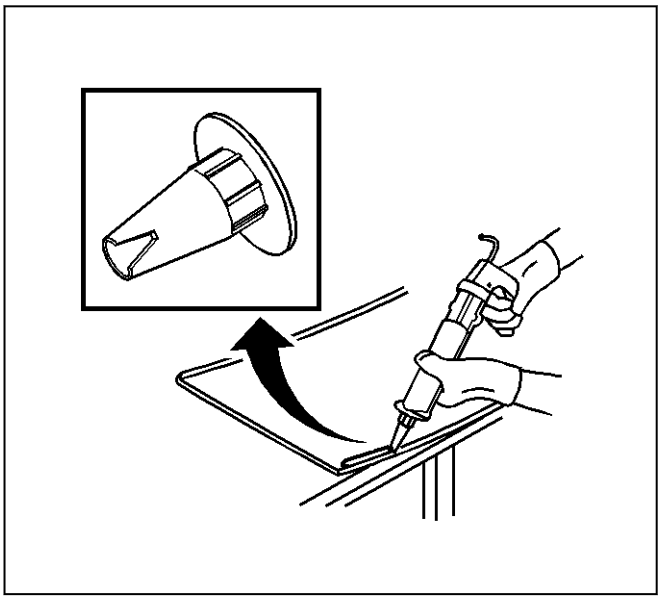

772047

20. Cut the applicator nozzle in order to provide a bead of 10 mm (0.393 in) wide and 15 mm (0.590 in) high.

Note: The urethane adhesive bead must maintain a consistent height and width uniformity.

21. Use a cartridge-type caulking gun in order to apply a smooth, continuous bead of urethane adhesive.

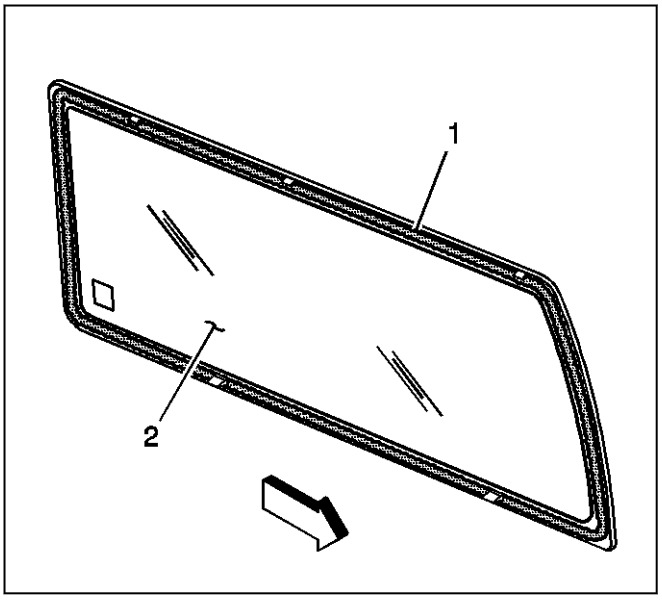

783826

22. Use the specifications as listed above to guide for the nozzle in order to apply the urethane adhesive (1) to the inner surface of the window.

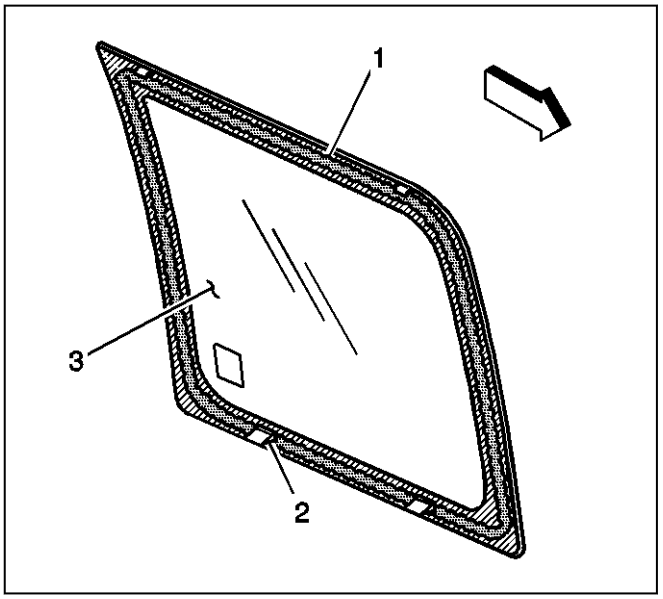

783843

Note: The bodyside glass must be installed to the bodyside opening within 5 minutes after the urethane adhesive is dispensed.

23. Position the window into the bodyside opening.
24. Place the bodyside glass locators (2) onto the slots in the pinchweld flange.

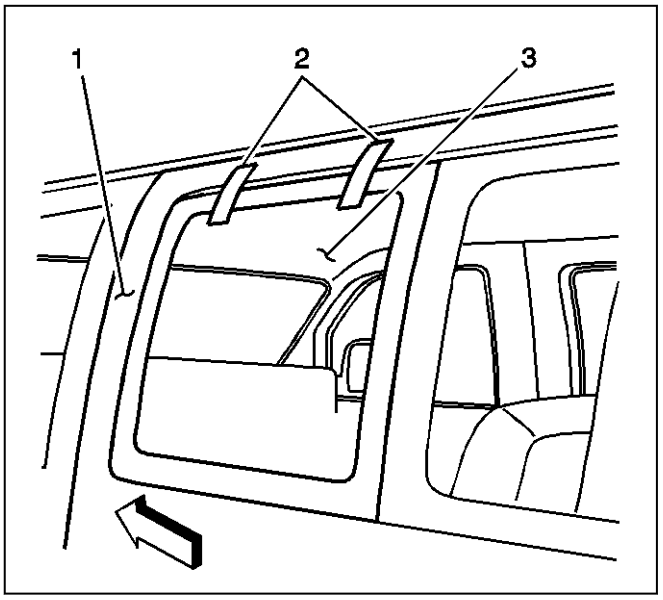

784645

25. Align the masking tape on the bodyside window to the body (2) masking tape.

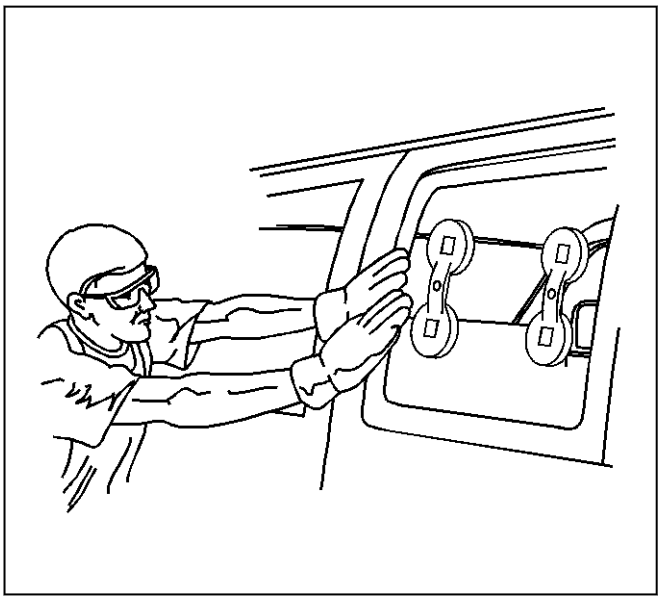

784647

26. Press around the entire periphery of the bodyside glass edge in order to wet-out the urethane adhesive bead.
27. Tape the window to the body in order to minimize movement until the urethane adhesive cures.

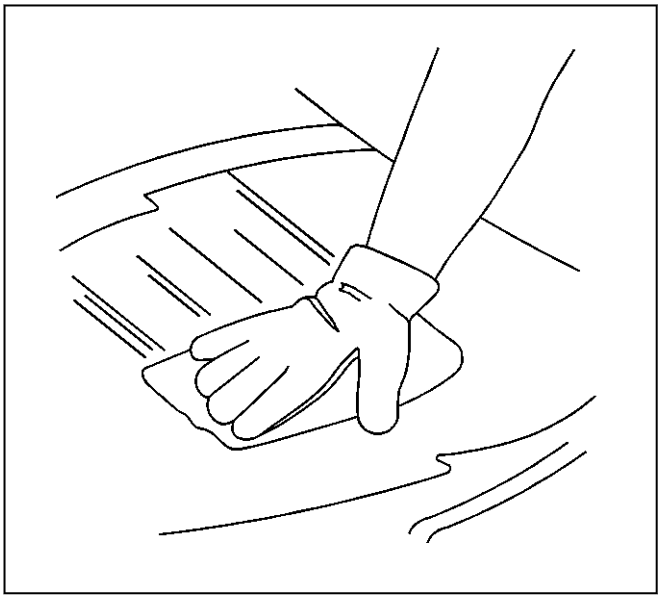

706194

28. Clean any excess urethane adhesive from the body by using VMP Naptha.
29. Clean any excess urethane adhesive from the interior trim by using acrysol.

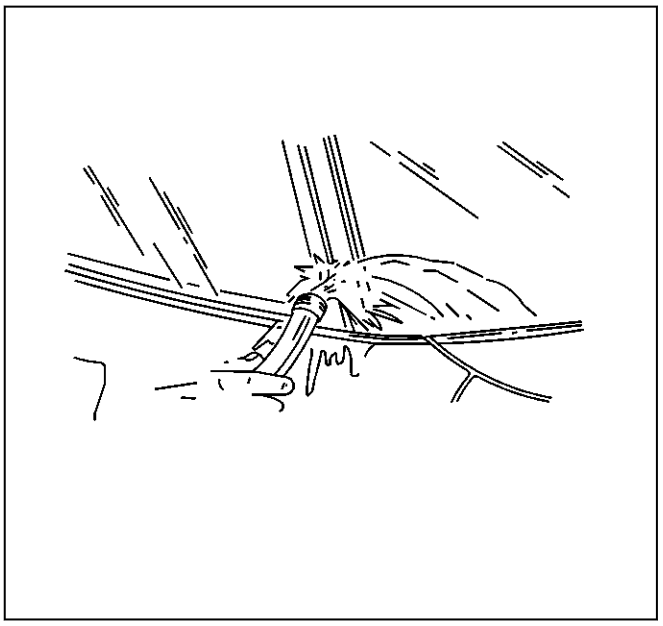

95572

Note: Do not direct a hard stream of high pressure water to the freshly applied urethane adhesive.

30. Use a soft spray of warm water in order to immediately water test the window.
31. Inspect the window for leaks.
32. If any leaks are found, use a plastic paddle in order to apply extra urethane adhesive at the leak point.
33. Retest the window for leaks.

Warning: Insufficient curing of urethane adhesive may allow unrestrained occupants to be ejected from the vehicle resulting in personal injury.

- ***For the moisture-curing type of urethane adhesive, allow a minimum of 6 hours at 21°C (70°F) or greater and with at least 30 percent relative humidity. Allow at least 24 hours for the complete curing of the urethane adhesive.***
- ***For the chemical-curing type of urethane adhesive, allow a minimum of 1 hour .***

Do NOT physically disturb the repair area until after these minimum times have elapsed.

34. Maintain the following conditions in order to properly cure the urethane adhesive:
    - Partially lower a door window in order to prevent pressure buildups when closing doors before the urethane adhesive cures.
    - Do not drive the vehicle until the urethane adhesive is cured. Refer to the above curing times.
    - Do not use compressed air in order to dry the urethane adhesive.

Front Side Door Window Channel Replacement - Upper Front

Removal Procedure

1. Front Side Door Water Deflector » Remove— [Link target (target-id 149852-) not found]
2. Front Side Door Front Garnish Molding » Remove — [Link target (target-id 149896-) not found]
3. Front Side Door Rear Garnish Molding » Remove — [Link target (target-id 149897-) not found]
4. Lower the front side door window.

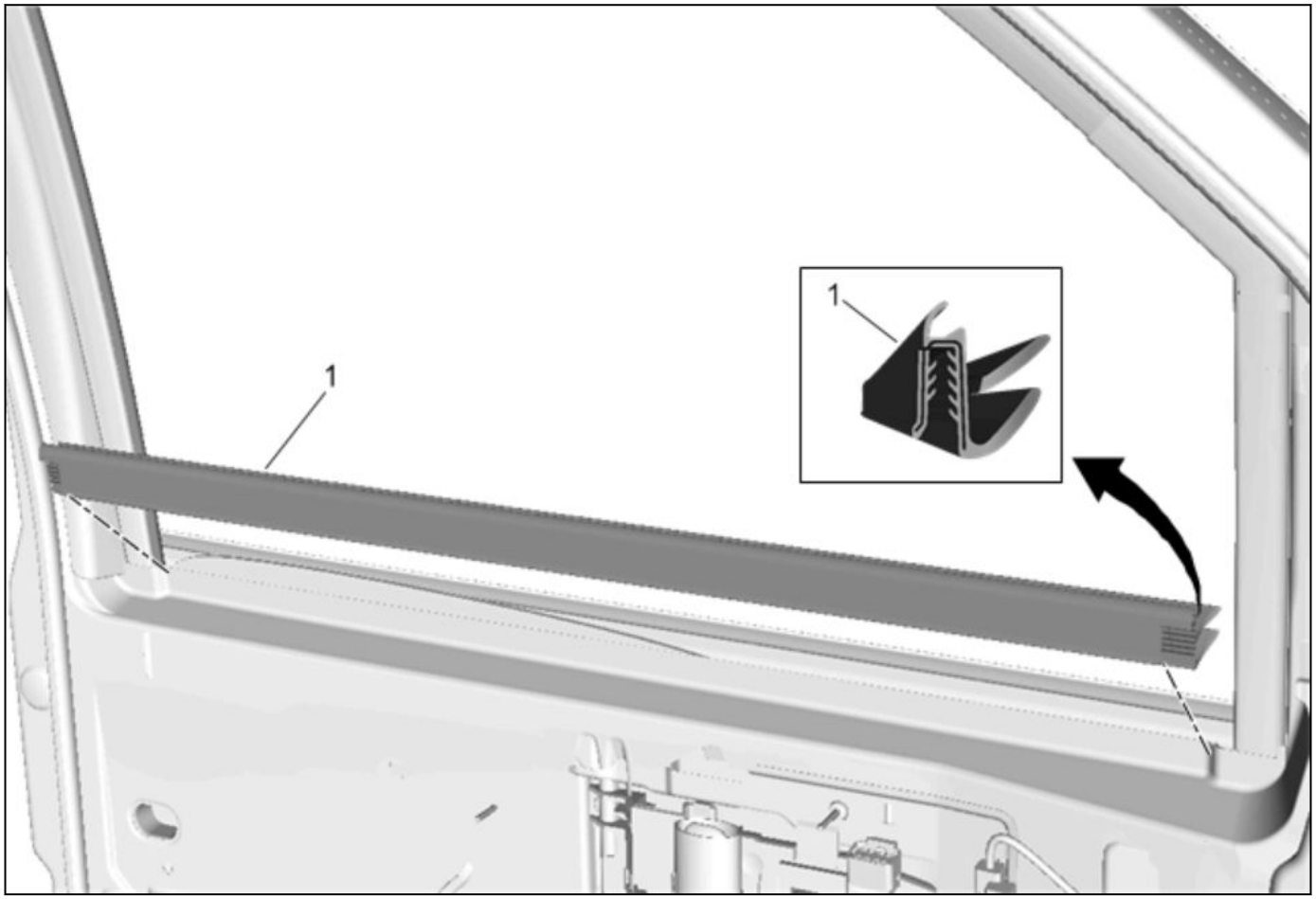

4847568

5. Front Side Door Window Belt Inner Sealing Strip (1) » Remove— *Front Side Door Window Belt Inner Sealing Strip Replacement 1-20*

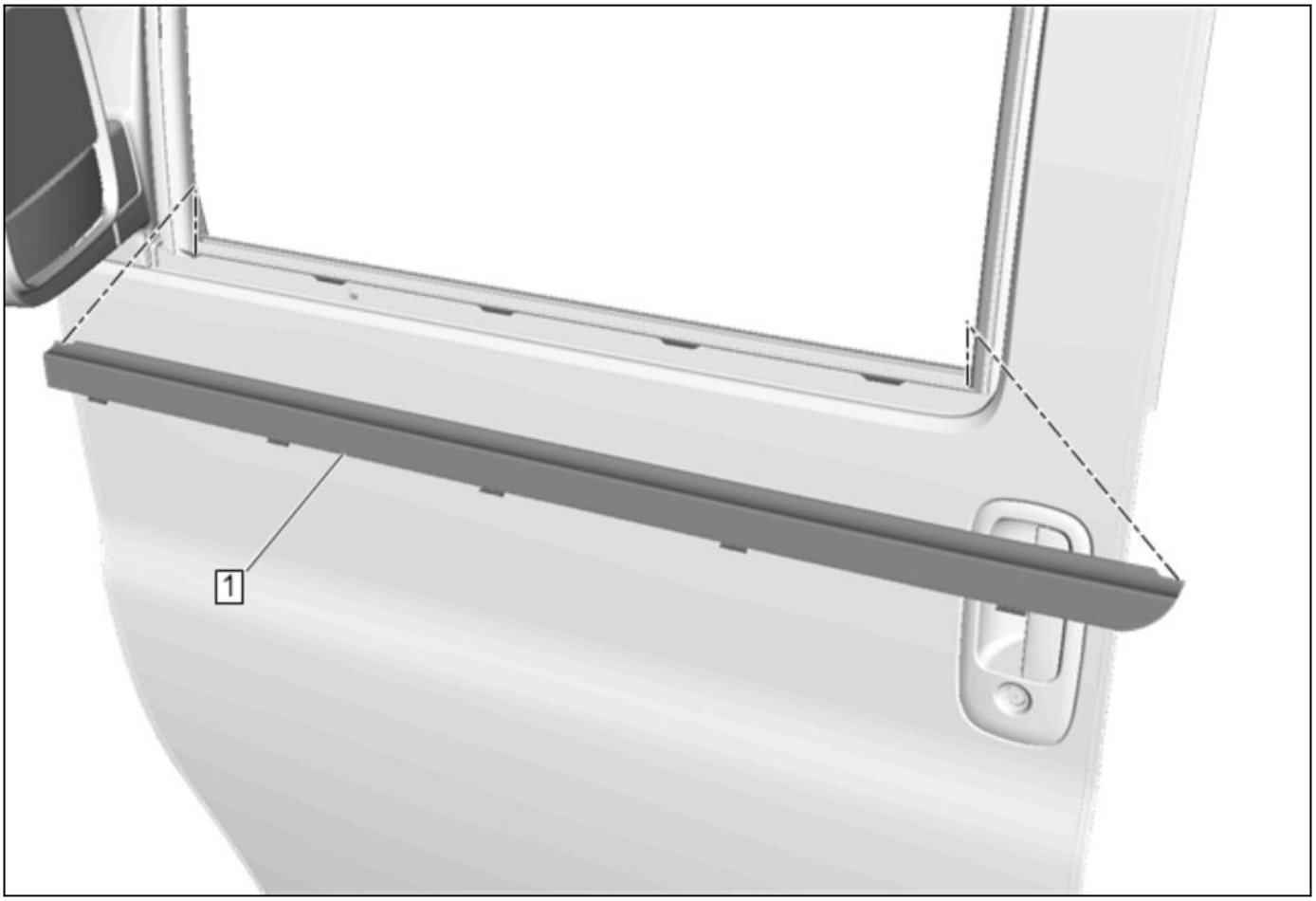

4847153

6. Front Side Door Window Belt Reveal Molding (1) » Remove— *Front Side Door Window Belt Reveal Molding Replacement 1-21*

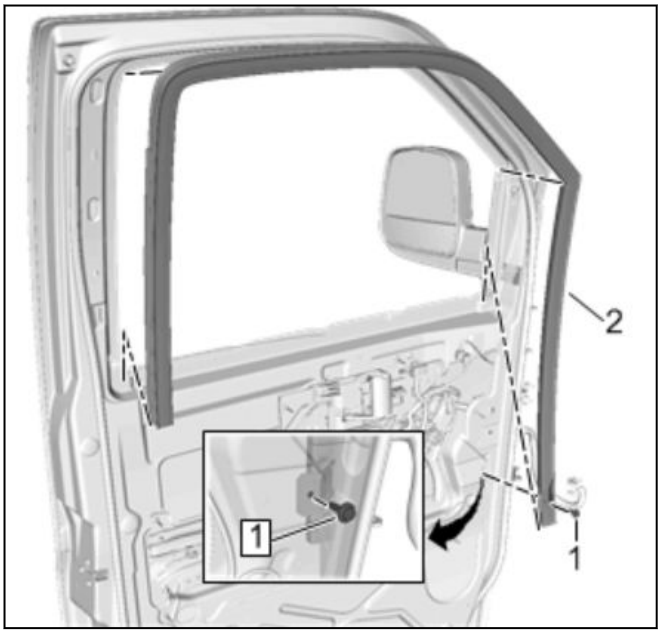

4847556

7. Front Side Door Window Channel Bolt (1) » Remove

8. Front Side Door Window Channel — Upper Front (2) » Remove

Installation Procedure

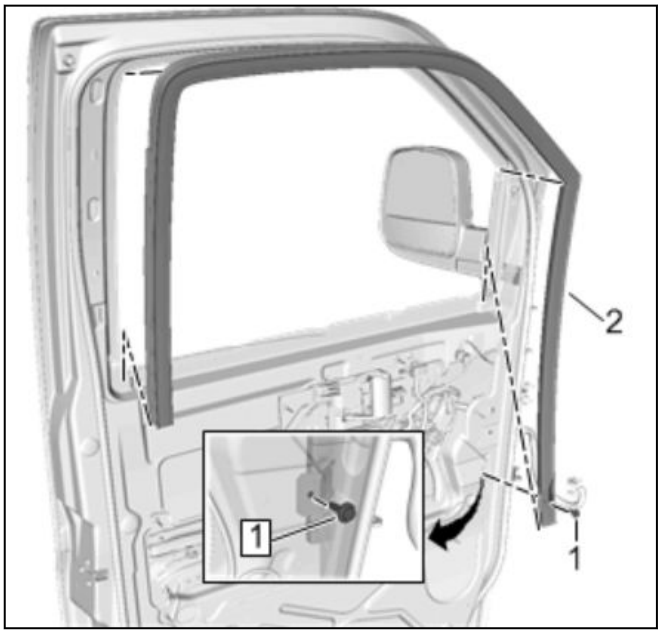

4847556

1. Front Side Door Window Channel — Upper Front (2) » Install

2. Front Side Door Window Channel Bolt (1) » Install and tighten**10 newtonm (89 lb in)**

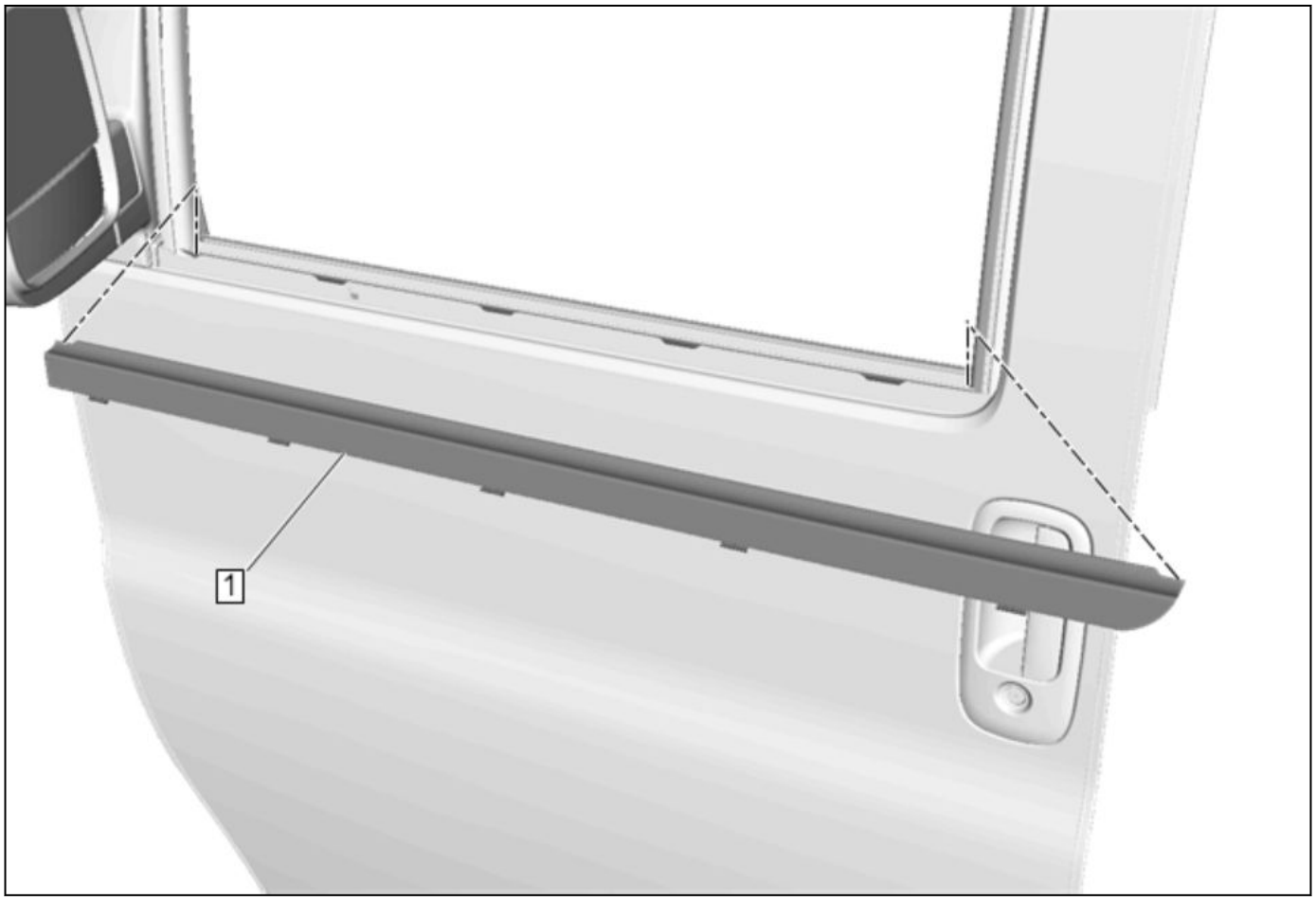

4847153

3. Front Side Door Window Belt Reveal Molding (1) » Install— *Front Side Door Window Belt Reveal Molding Replacement 1-21*

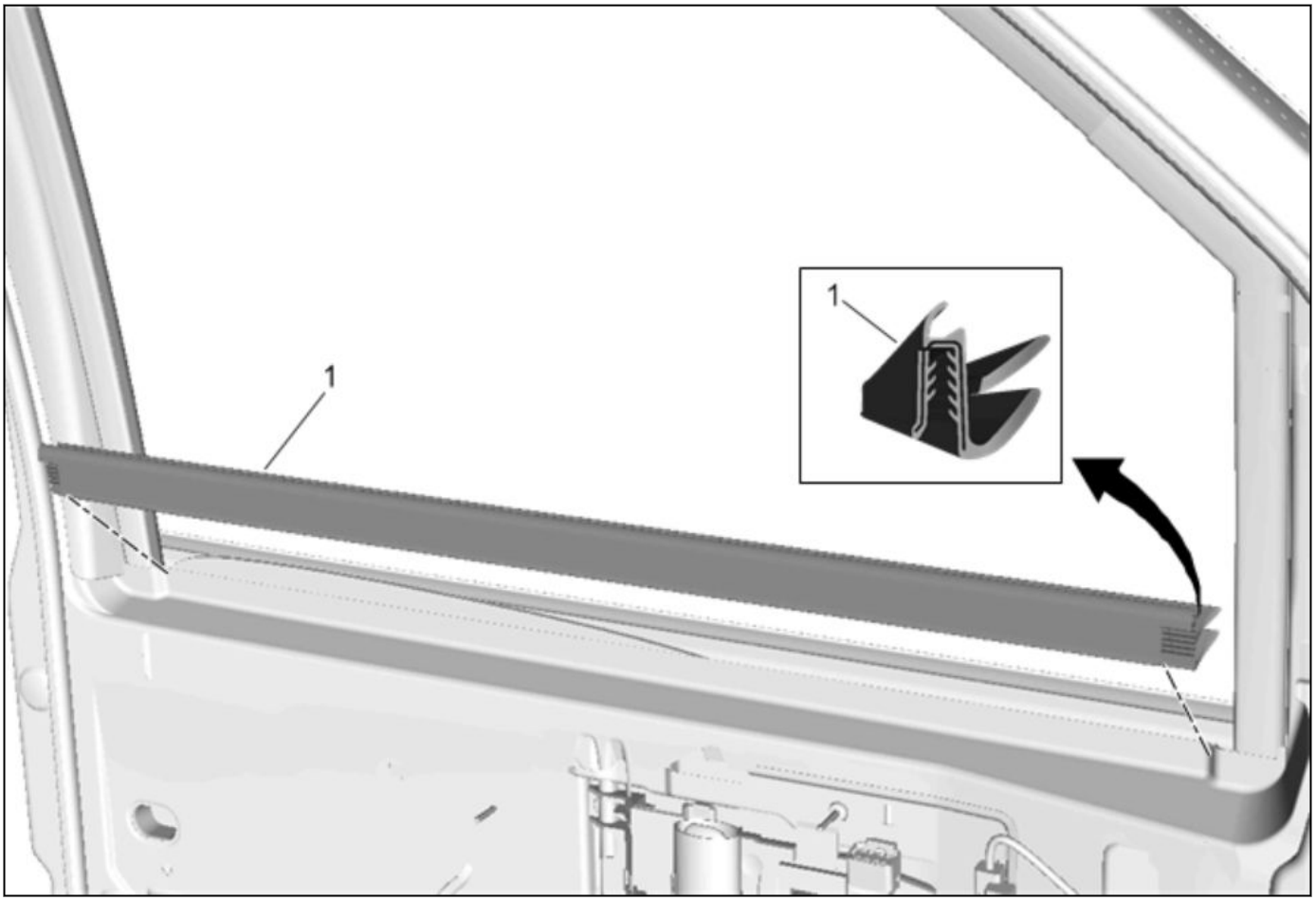

4847568

4. Front Side Door Window Belt Inner Sealing Strip (1) » Install— *Front Side Door Window Belt Inner Sealing Strip Replacement 1-20*
5. Front Side Door Rear Garnish Molding» Install— [Link target (target-id 149897-) not found]
6. Front Side Door Front Garnish Molding » Install— [Link target (target-id 149896-) not found]
7. Front Side Door Water Deflector » Install— [Link target (target-id 149852-) not found]

Front Side Door Window Channel Replacement - Lower Rear

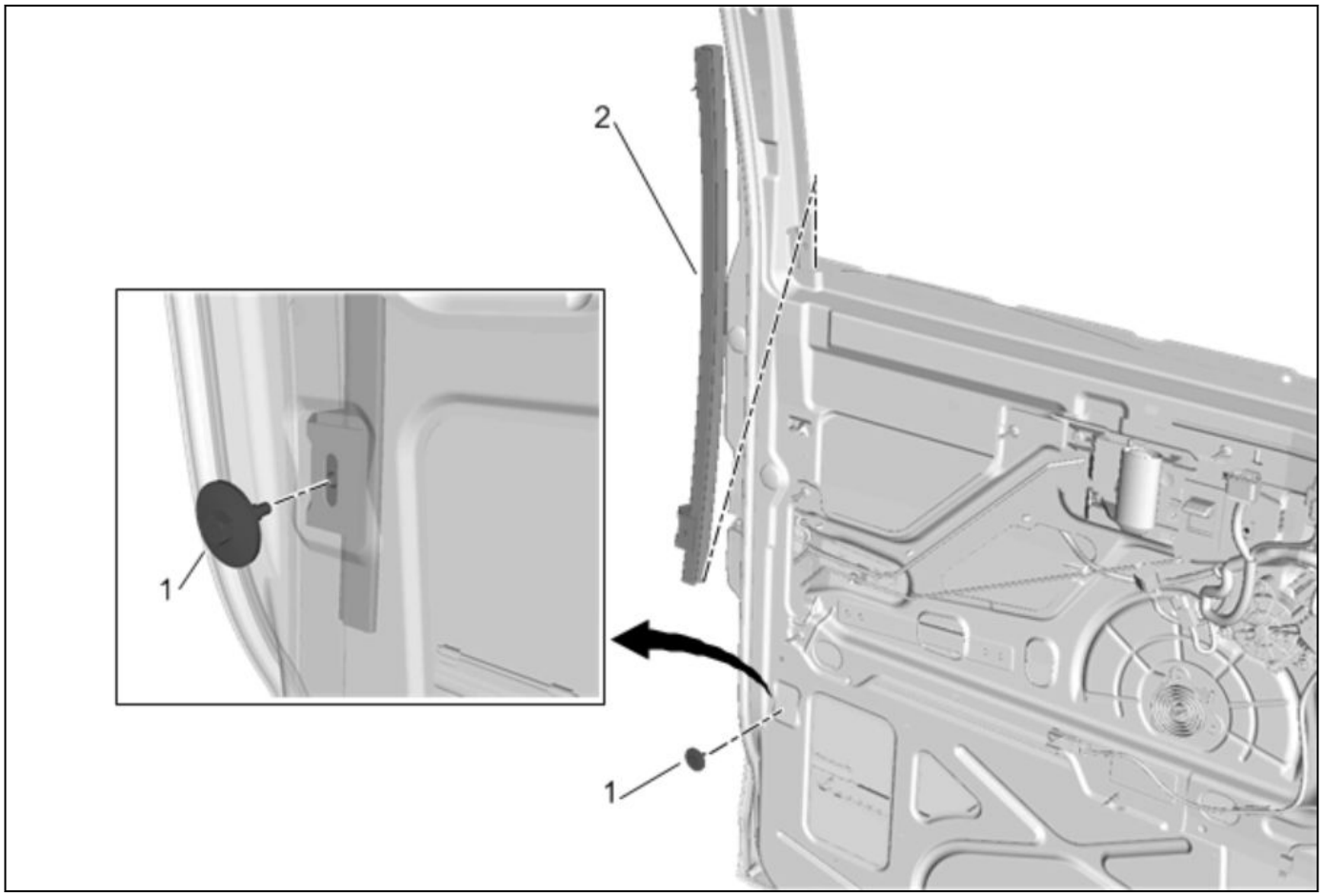

4847561

Front Side Door Window Channel Replacement - Lower Rear

Callout	Component Name
Warning: Refer to [Link target (target-id 178050-) not found] . ***Warning: Disconnect the power window switch when working inside the door. When operated, the Express Up/Down Feature allows the door window to move very quickly, without stopping, which could cause personal injury.*** **Preliminary Procedure** *Front Side Door Window Replacement 1-9*	
1	Front Side Door Window Channel Bolt **Caution:** Refer to [Link target (target-id 178169-) not found] . **Tighten** 10 N•m (89 lb in)
2	Front Side Door Window Channel – Lower Rear

Description and Operation

Full-Cut Method Description

Important:

- If corrosion of the pinch-weld flange is present, or if sheet metal repairs or replacements are required, refinish the pinch-weld flange in order to present a clean, primer-only surface.
- If paint repairs are required, mask the flange bonding area, prior to applying the color coat, in order to provide a clean, primer-only surface.
- Appropriate materials for these primer applications are typically 2 component catalyzed products. Use materials such as BASF DE15®, DuPont 2610®, Sherwin-Williams PSE 4600 and NP70® and Martin-Semour 5120 ,5130® , PPG DP90LF SPIES/HECKER 3688/8590 – 3688/5150 –

4070/5090 STANDOX 11158/13320 – 14653/14980 products are approved for this application. Follow the manufacturer's directions for the mix, the application, and the drying times.

- After repairing the opening as indicated, use adhesive systems which meet GM Specification GM 3651G.

Use only the full cut method, also known in the field as full strip method, when installing windows.

This method includes the following:

- The replacement of a majority of the adhesive bead. Remove all but approximately 2 mm (3/64 in) of the existing bead of adhesive from the pinch-weld flange.
- Apply pinch-weld primer to any exposed painted areas on the pinch-weld flange.

No mounds or loose pieces of adhesive should remain on the pinch-weld flange. Do not remove all traces of adhesive.

Stationary Window Description

Most stationary windows, specifically windshields, are retained to the body with adhesive which adheres the window to the body, increasing structural integrity. The reinstallation of the windows with adhesive requires complete replacement of the adhesive bead, and is known as the full cut method. All stationary windows must use a adhesive systems which meet GM Specification GMW-15672.

Urethane Adhesive Description

For replacement of any adhesive-installed window, use the full cut method only.

Use an adhesive that is approved by GM, Specification GMW-15672.

Use these materials based on specific manufacturer. Do NOT intermix primers or adhesives from one manufacturer to another.

Always follow the system manufacturers instructions for application, handling, and curing.

Special Tools and Equipment

Special Tools

Illustration	Tool Number/ Description
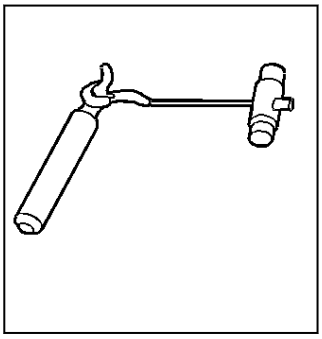 3898	BO-24402-A J-24402-A Glass Sealant Cold Knife Remover
161806	BO-39040 J-39040 Quarter Window Remover

Horns and Pedestrian Alerts

Specifications

Fastener Specifications

Reusable Threaded Fastener Tightening Specifications

Note: All fasteners listed in this table can be reused after removal.	
Application	Specification
	Metric (English)
Horn Nut	10 N•m (89 lb in)
Steering Wheel Horn Switch Bolt	7 N•m (62 lb in)

Schematic and Routing Diagrams

7085659

Horn Schematics (Horn Schematics)

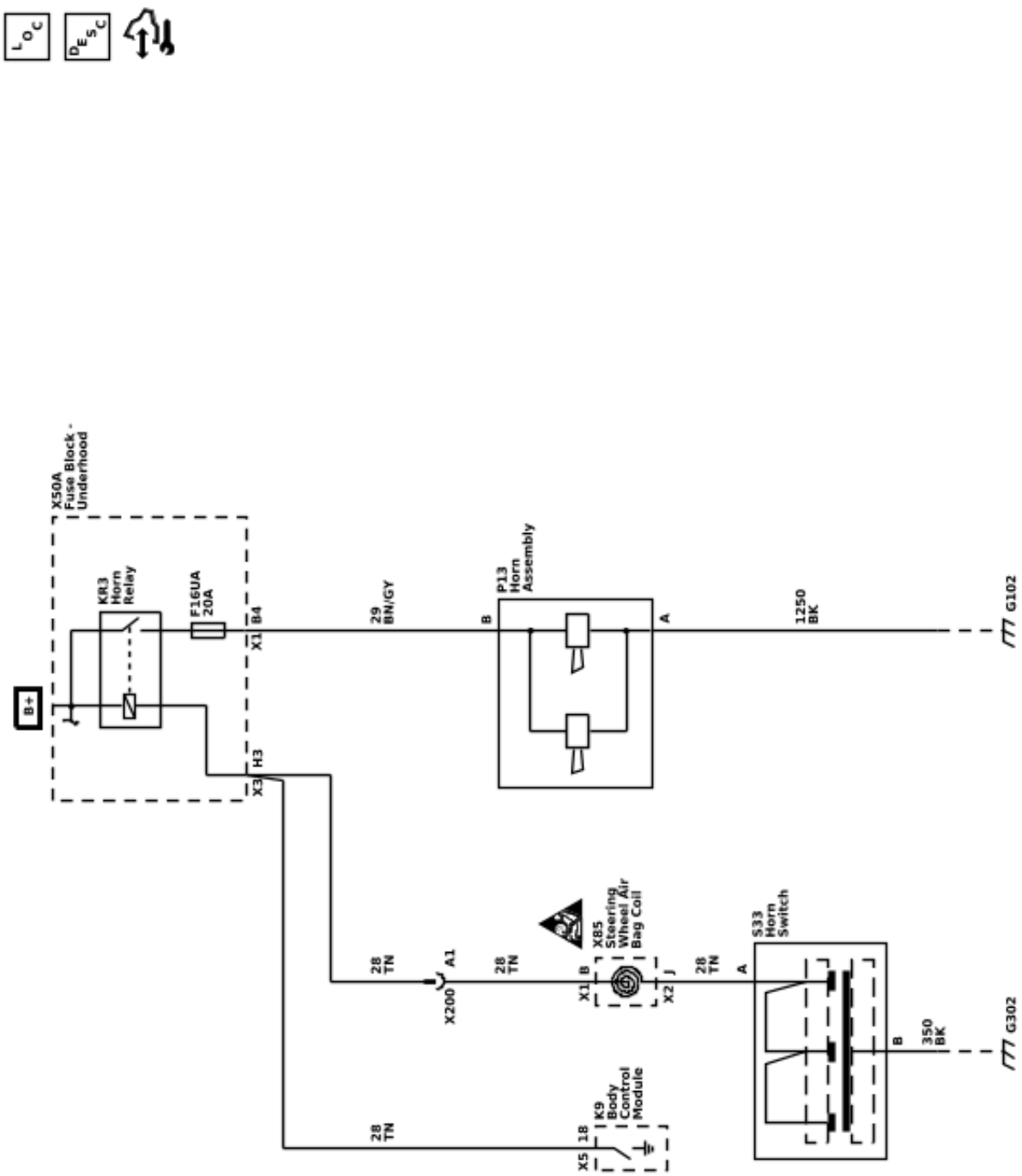

Repair Instructions

Horn Replacement

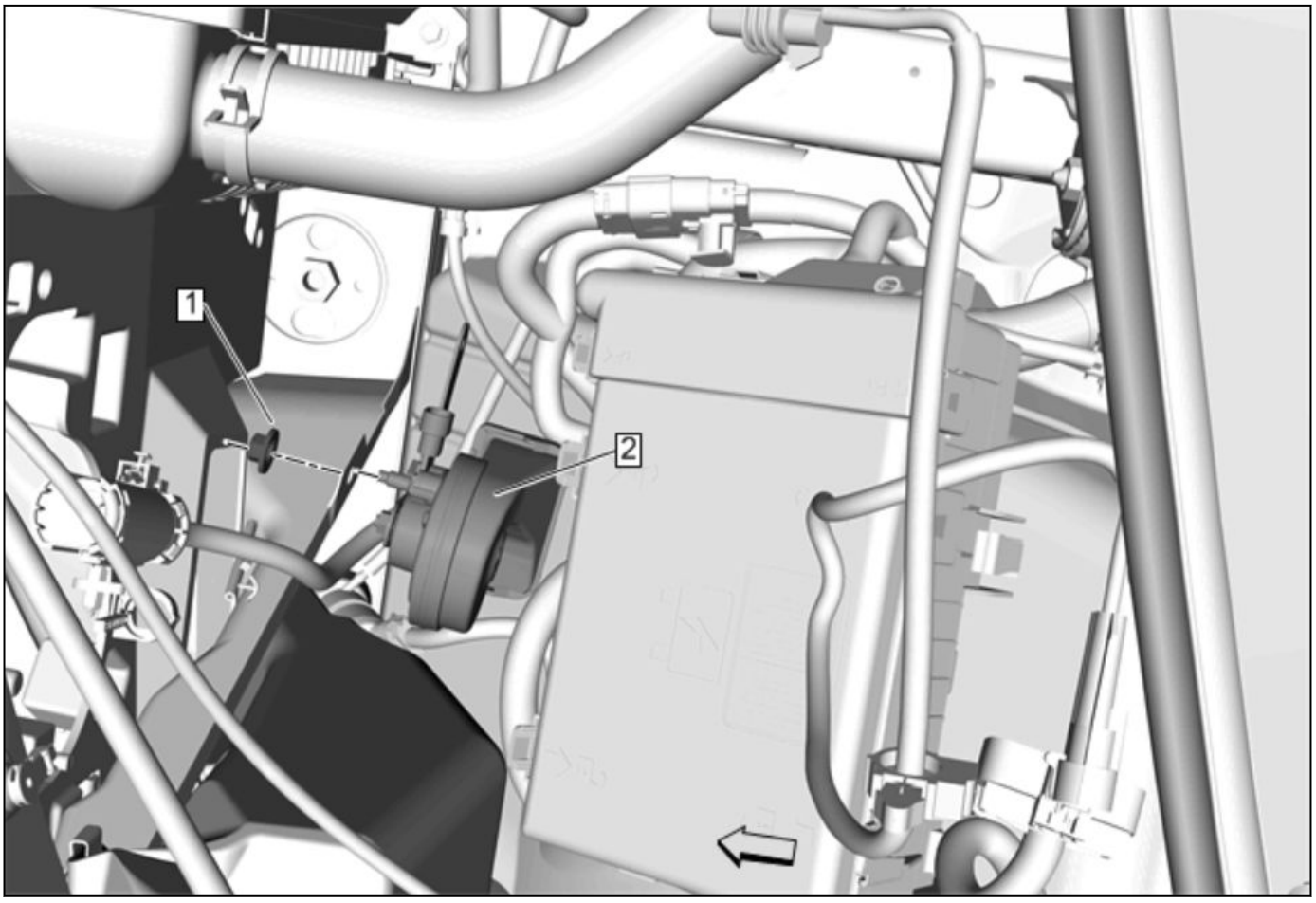

4854075

Horn Replacement

Callout	Component Name
1	Horn Nut **Caution:** Refer to [Link target (target-id 178169-) not found] . **Tighten** 25 N•m (18 lb ft)
2	Horn **Procedure** Disconnect the electrical connector.

Lighting

Specifications

Fastener Specifications

Reusable Threaded Fastener Tightening Specifications

Note: All fasteners listed in this table can be reused after removal.	
Application	**Specification**
	Metric (English)
Brake Pedal Position Sensor Bolt	2.5 N•m (22 lb in)
Headlamp Screw	6 N•m (53 lb in)
High Mount Stop Lamp Screw	1.5 N•m (13 lb in)
License Lamp Screw	1.5 N•m (13 lb in)
Tail Lamp Nut	5 N•m (44 lb in)

Schematic and Routing Diagrams

Headlights/Daytime Running Lights (DRL) Schematics (Headlamp and Daytime Running Lamp Controls)

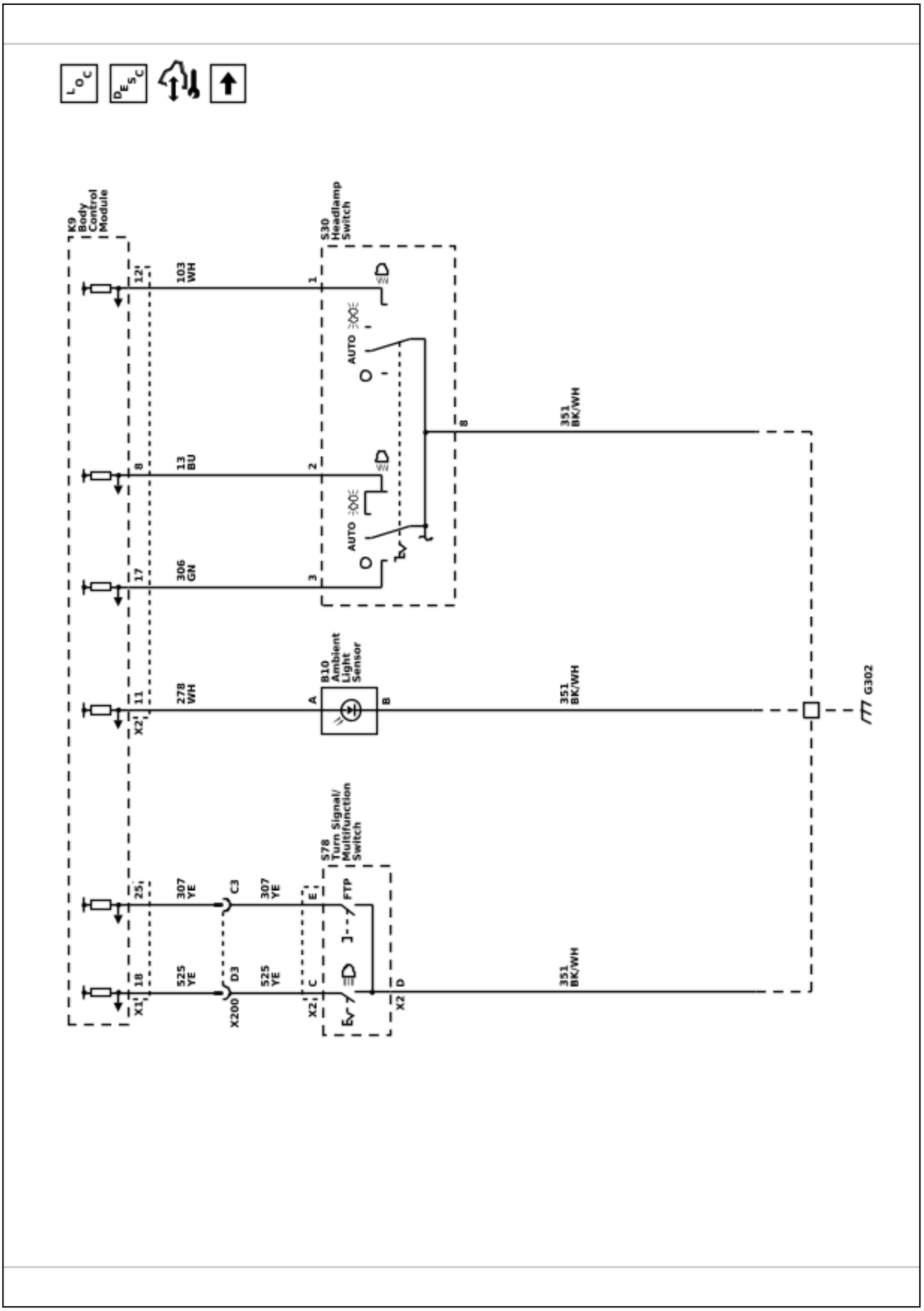

7085660

7085661

Headlights/Daytime Running Lights (DRL) Schematics (Low Beam and Daytime Running Lights)

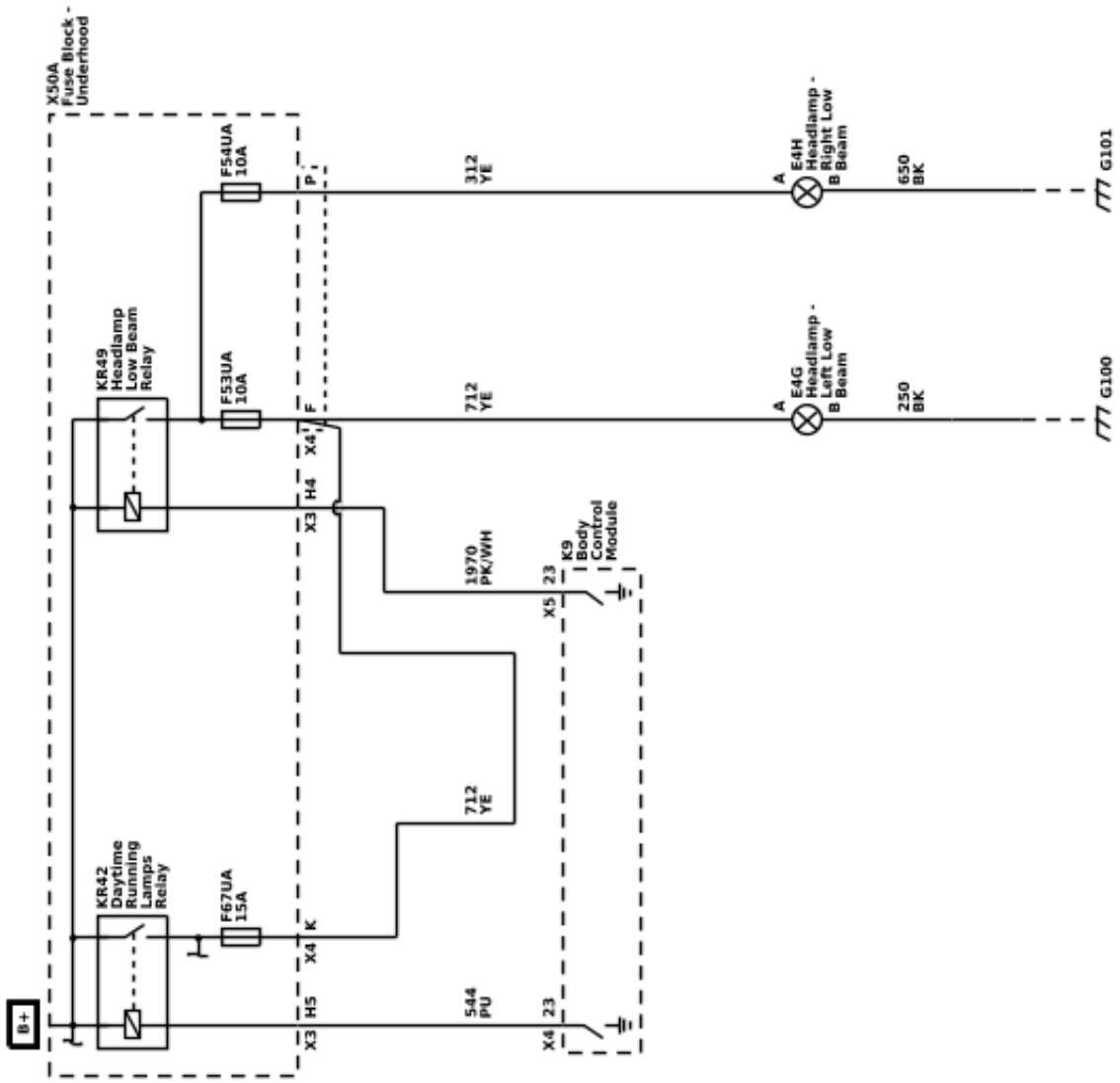

7085662

Headlights/Daytime Running Lights (DRL) Schematics (High Beams)

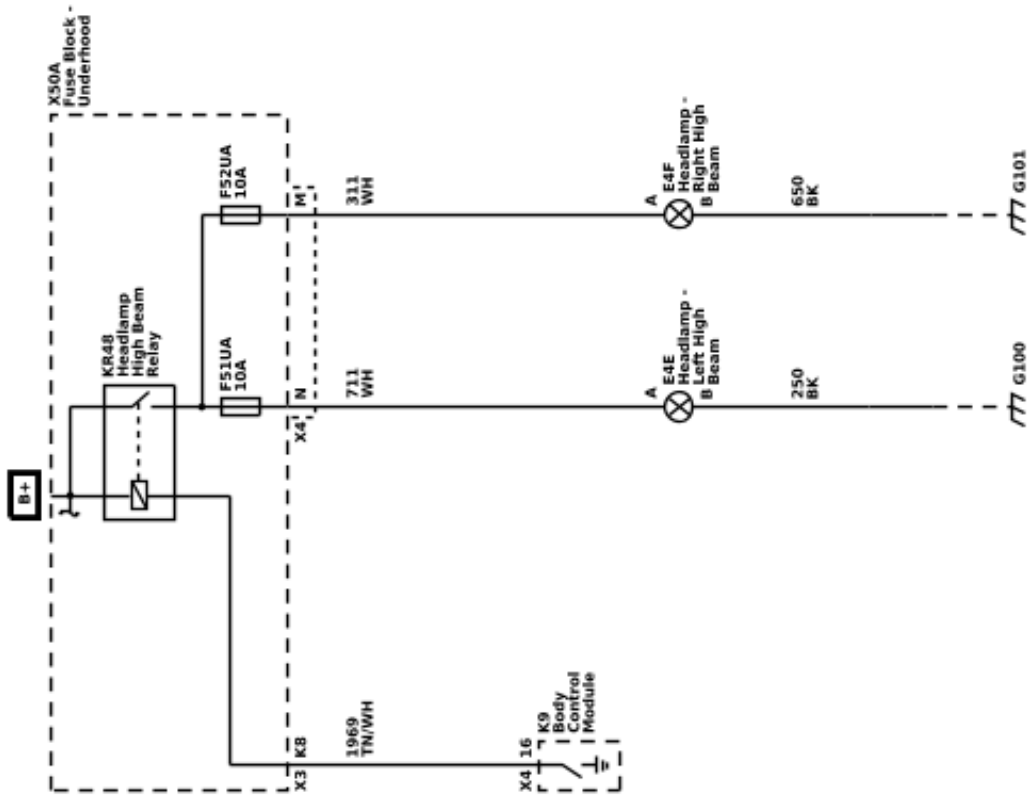

Exterior Lights Schematics (Park Lamp Controls and Park Lamps)

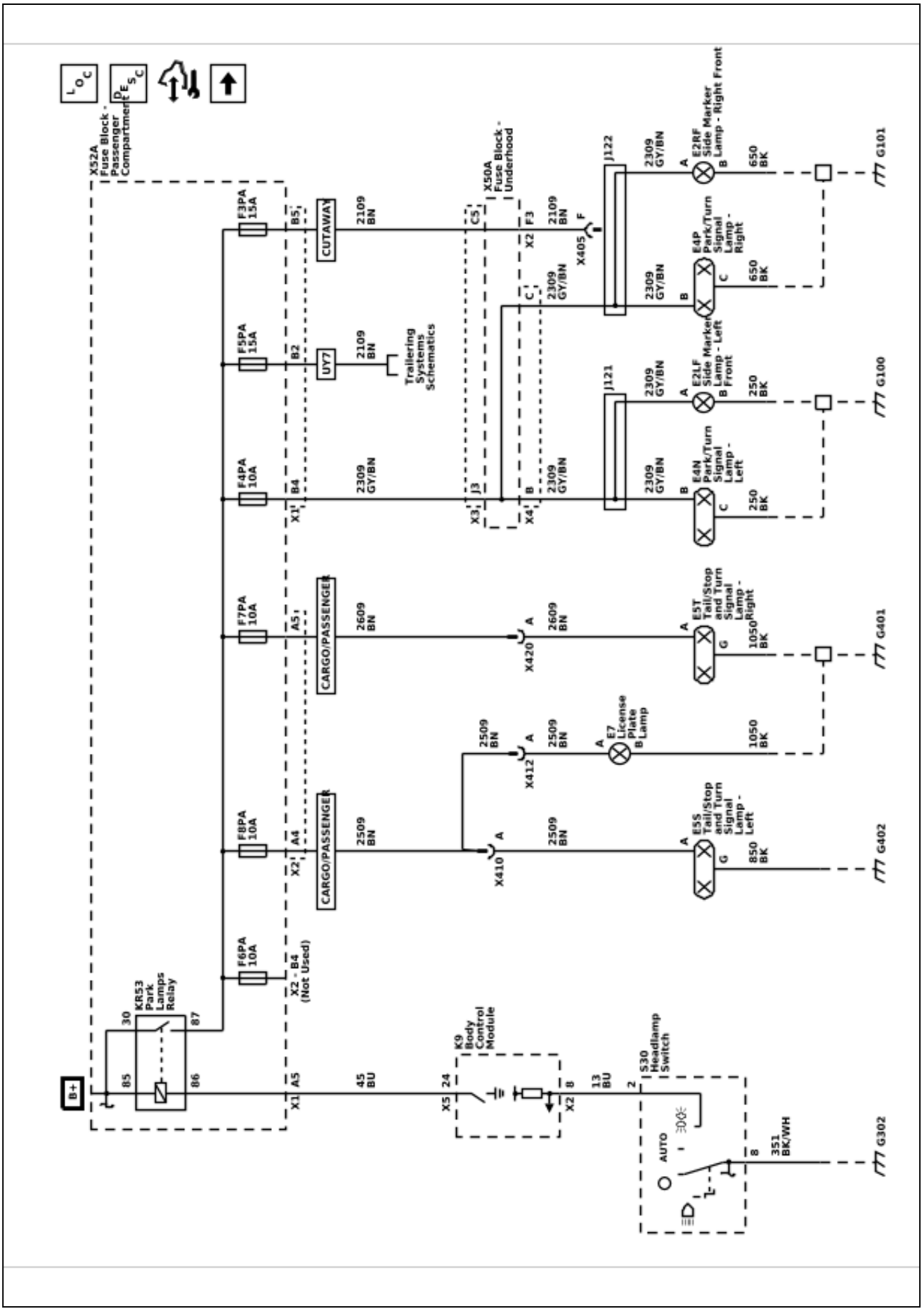

7085664

Exterior Lights Schematics (Turn Signal Controls and Front Turn Signal Lamps)

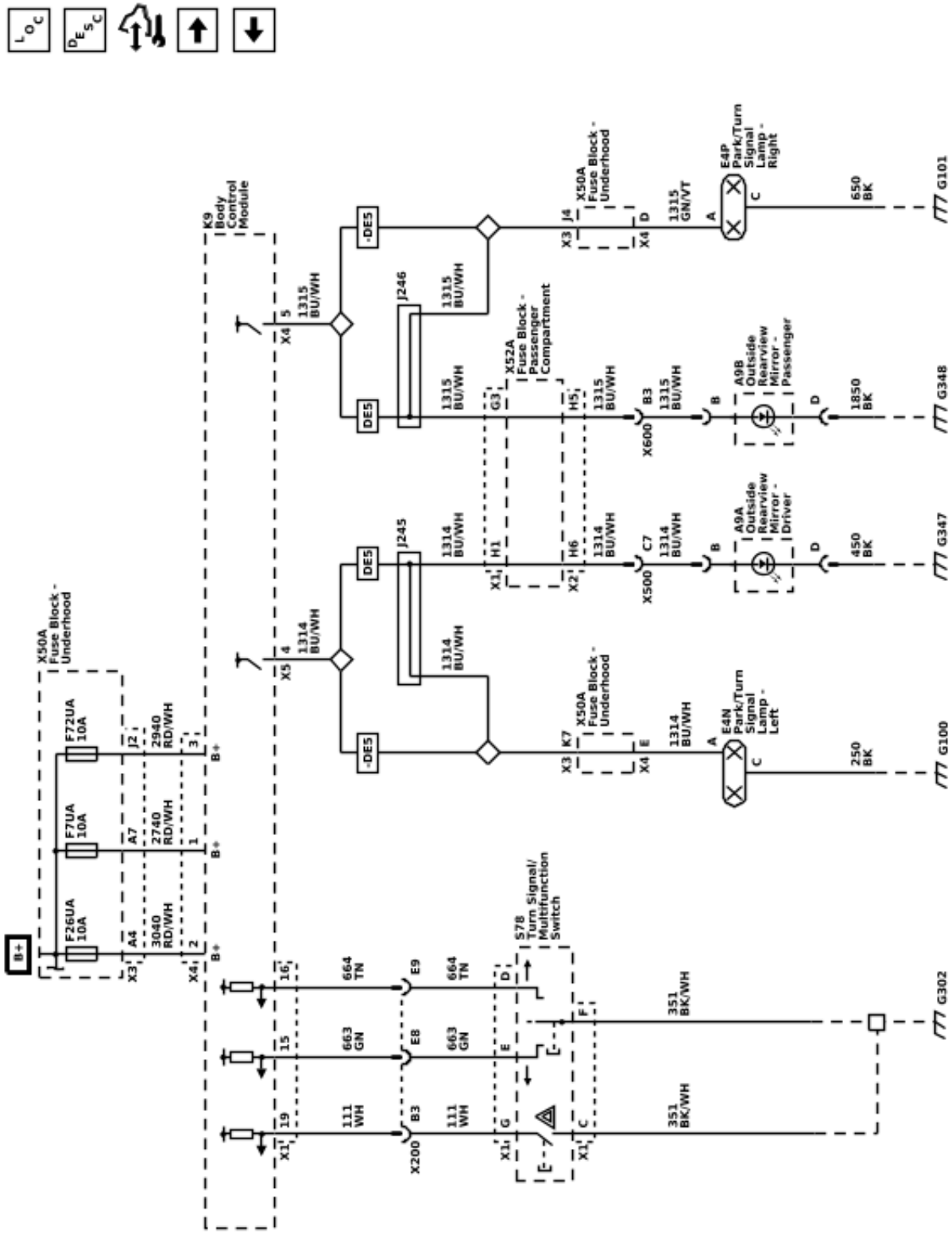

7085665

Exterior Lights Schematics (Rear Turn Indicator and Stop Lamps)

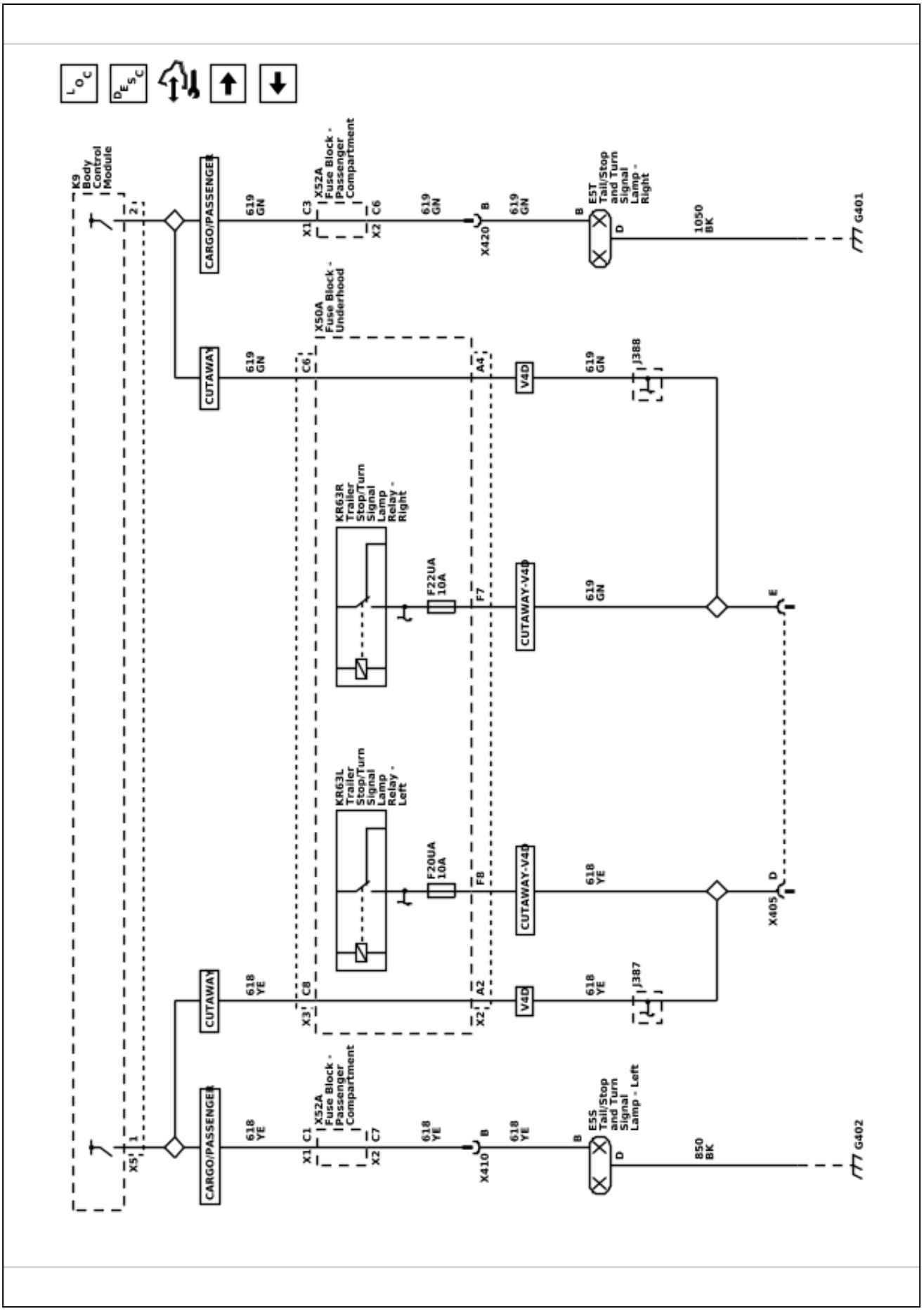

7085666

Exterior Lights Schematics (Stop Lamp Controls and CHMSL)

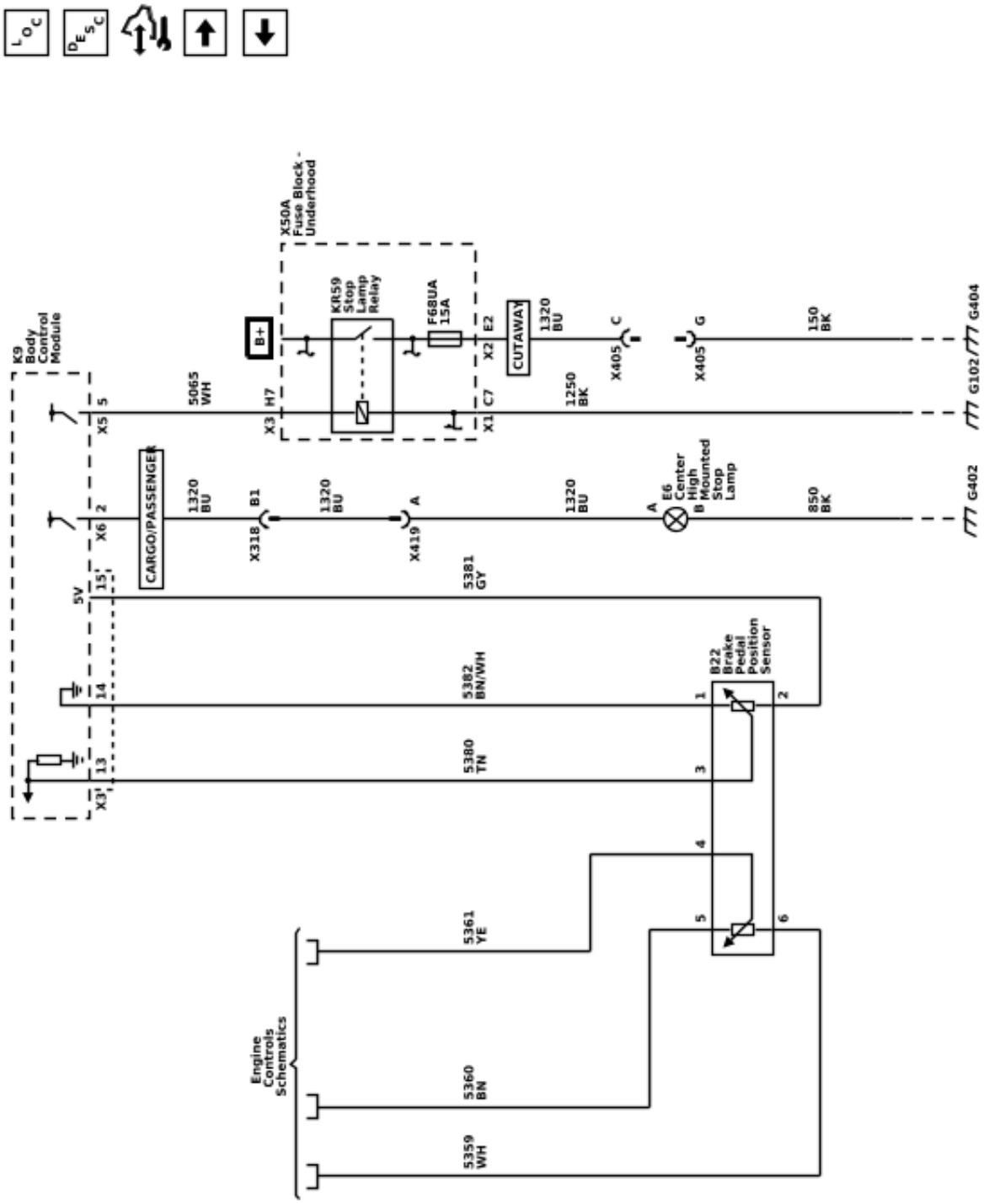

7085667

Exterior Lights Schematics (Backup Lamps)

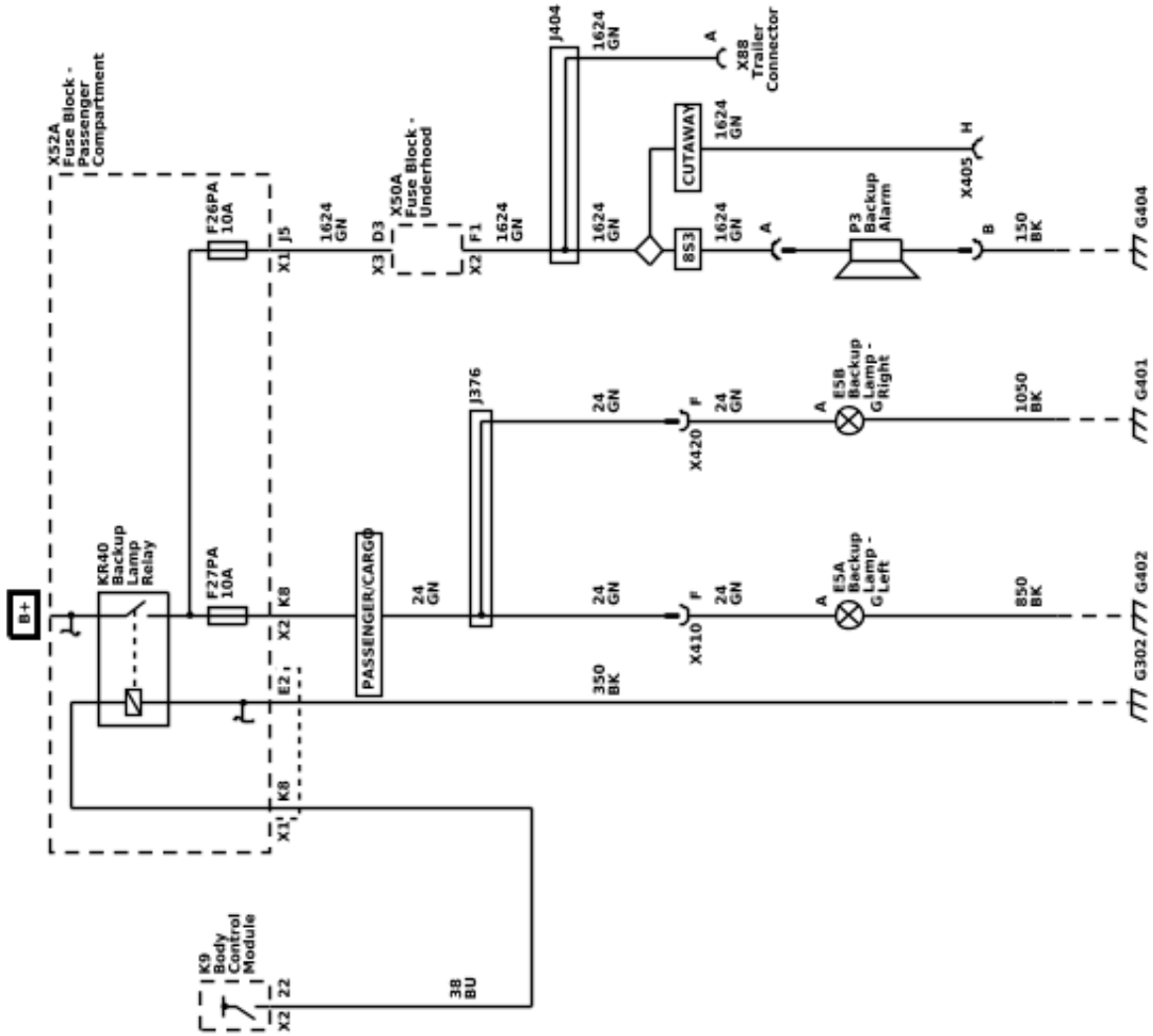

Interior Lights Schematics (Inadvertent Lamp Control)

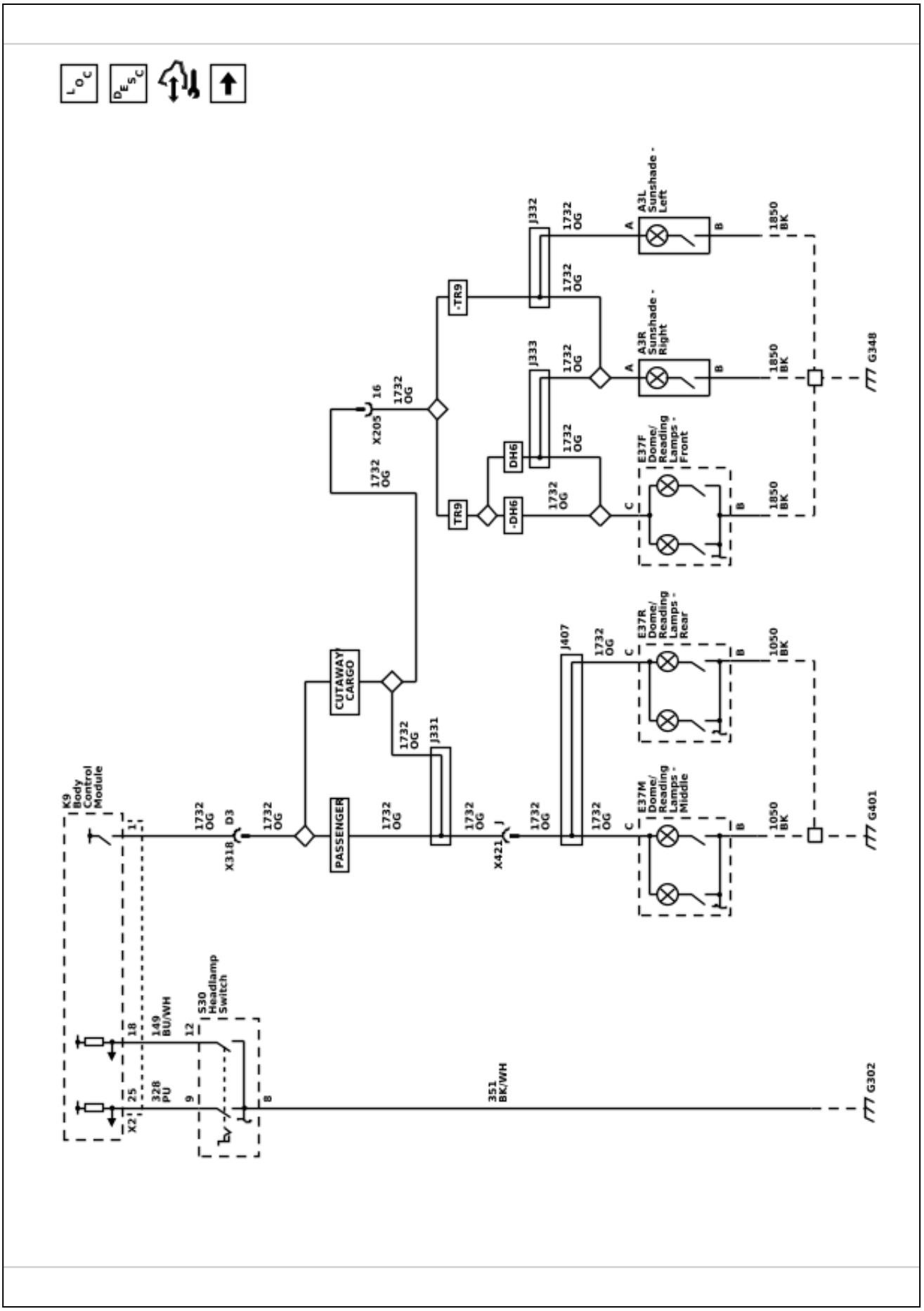

7085669

Interior Lights Schematics (Courtesy Lamp Control)

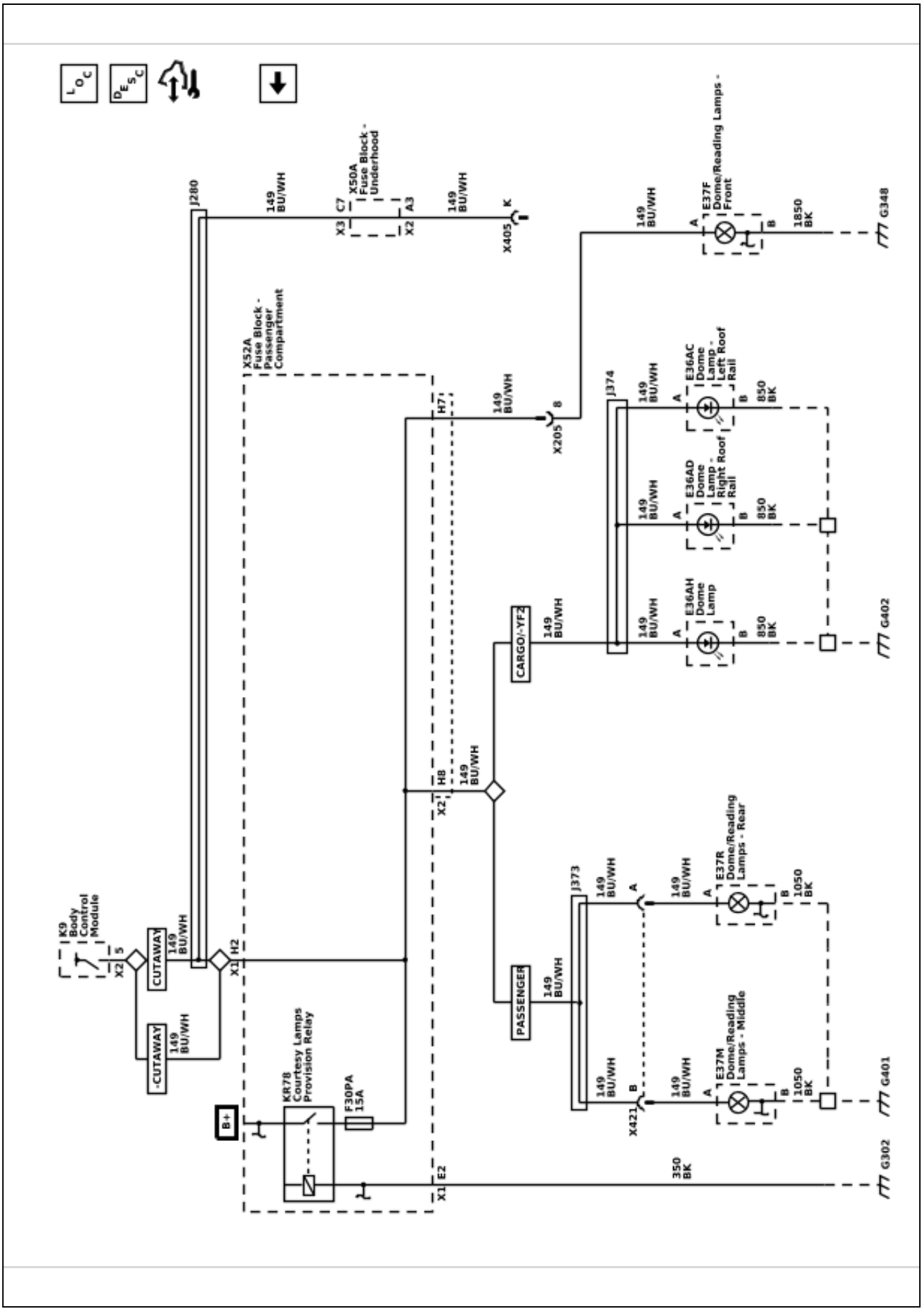

7085670

Interior Lights Dimming Schematics (Dimming Controls and LED Dimming)

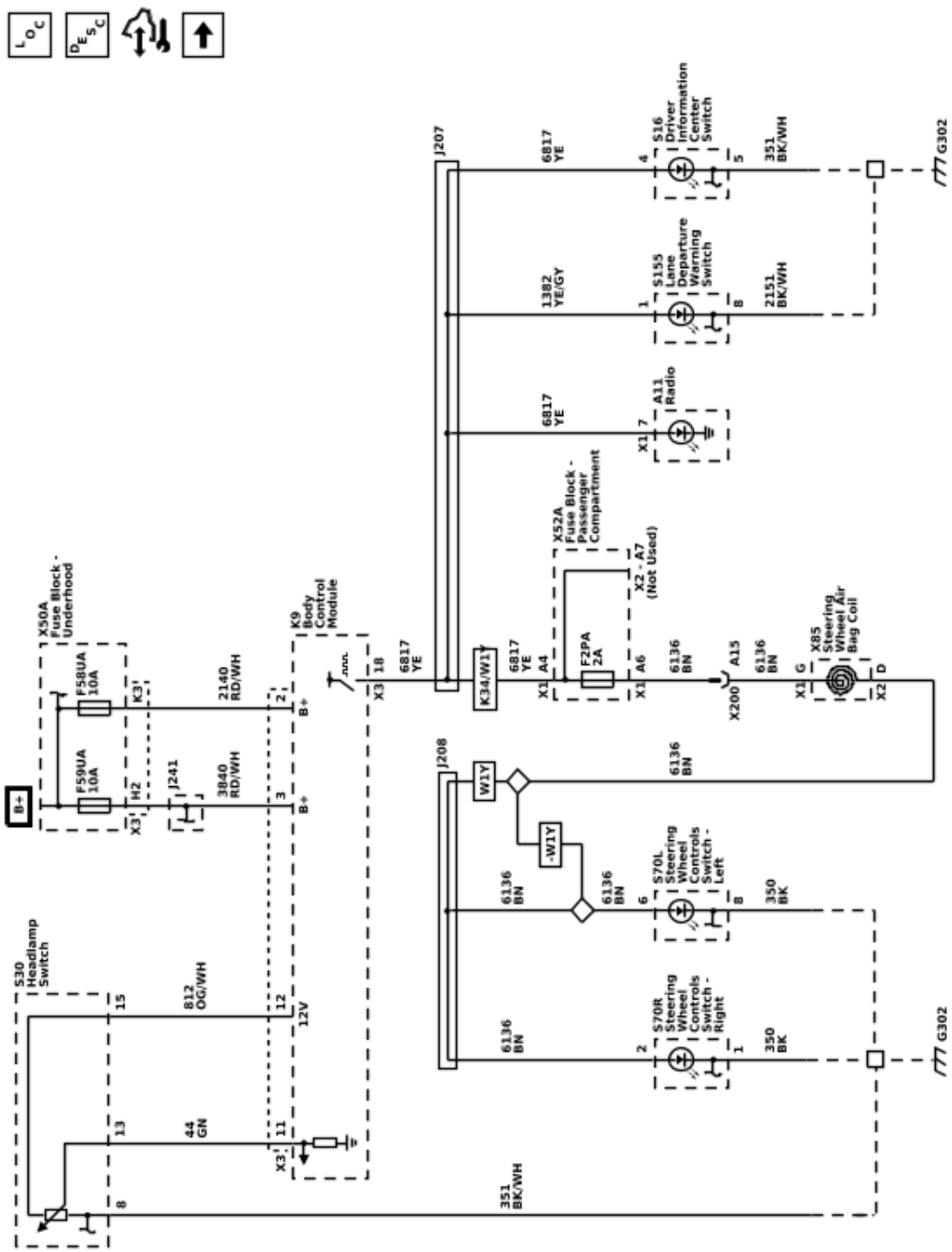

7085671

Interior Lights Dimming Schematics (I/P Bulb Dimming - 1 of 2)

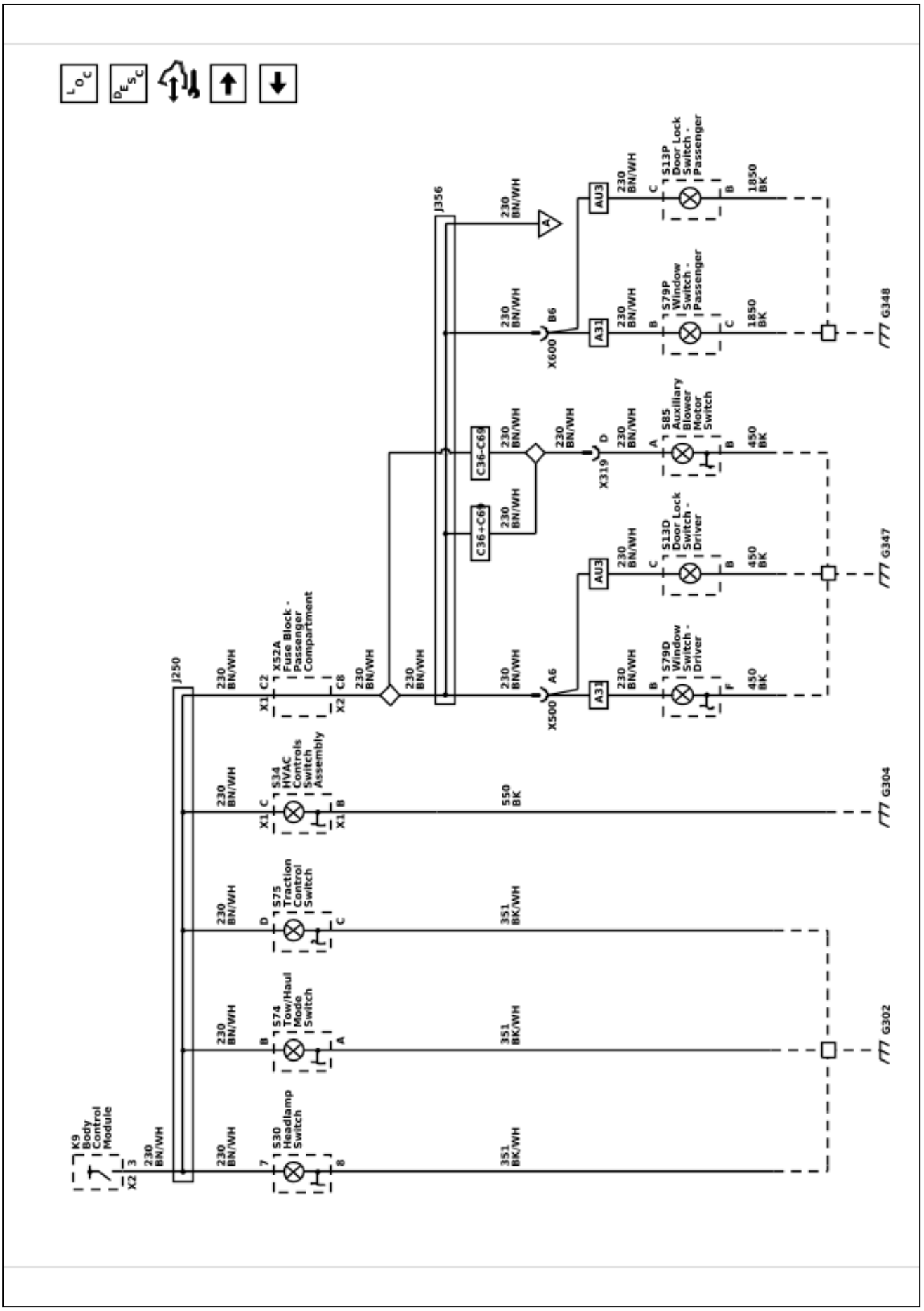

7085672

Interior Lights Dimming Schematics (I/P Bulb Dimming - 2 of 2)

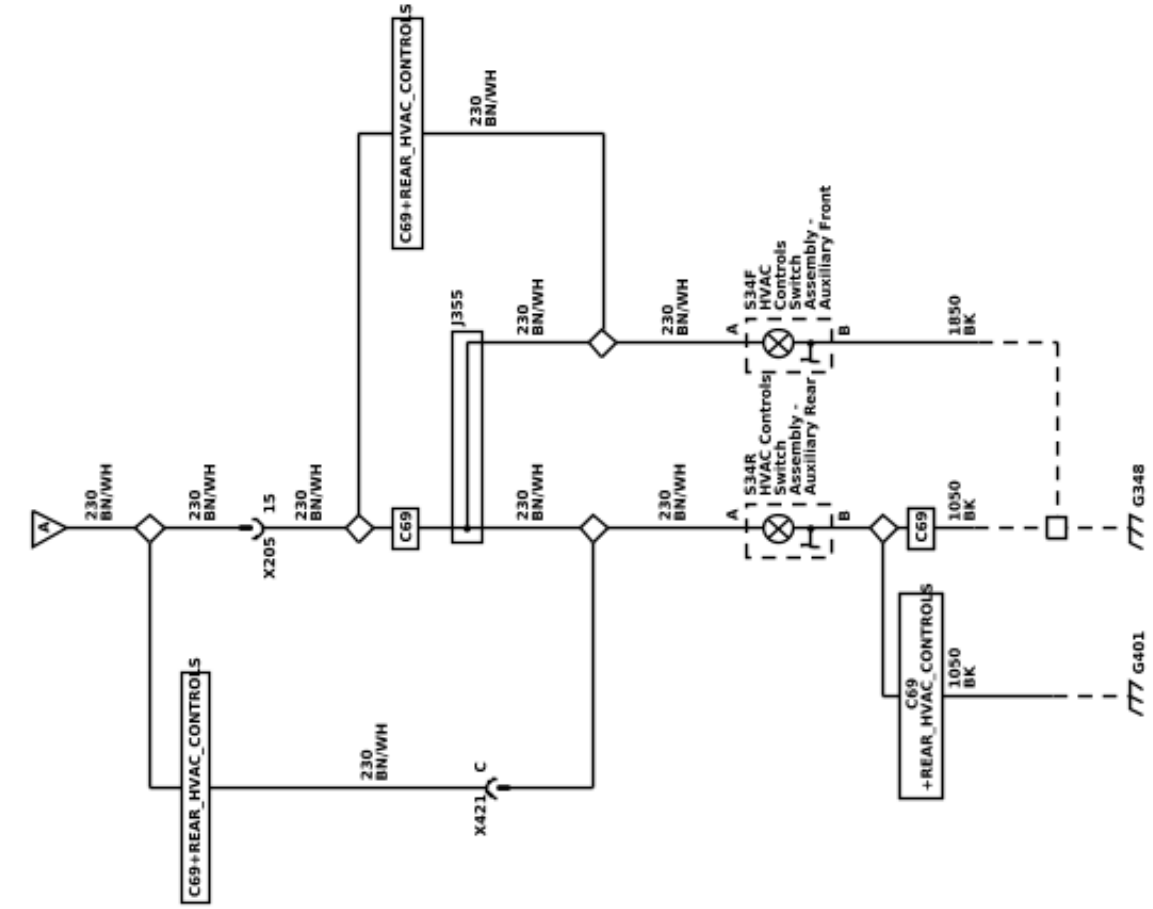

Repair Instructions

Headlamp Switch Replacement

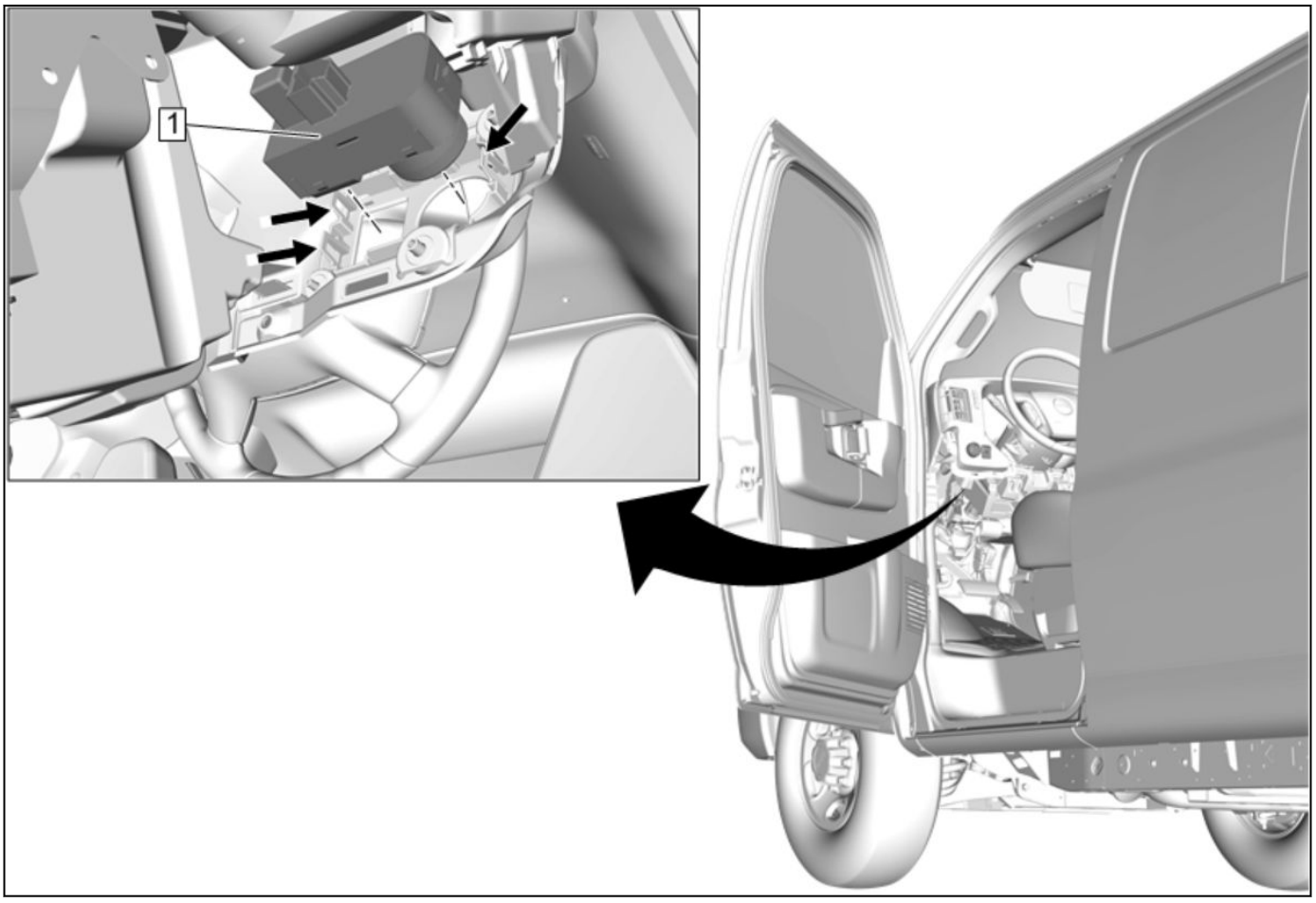

5198338

Headlamp Switch Replacement

Callout	Component Name
Preliminary Procedure Remove the left side instrument panel knee bolster. [Link target (target-id 218531-) not found]	
1	Headlamp Switch **Procedure** 1. Disconnect the electrical connector. 2. Release the retaining tabs.

Headlamp Automatic Control Ambient Light Sensor Replacement

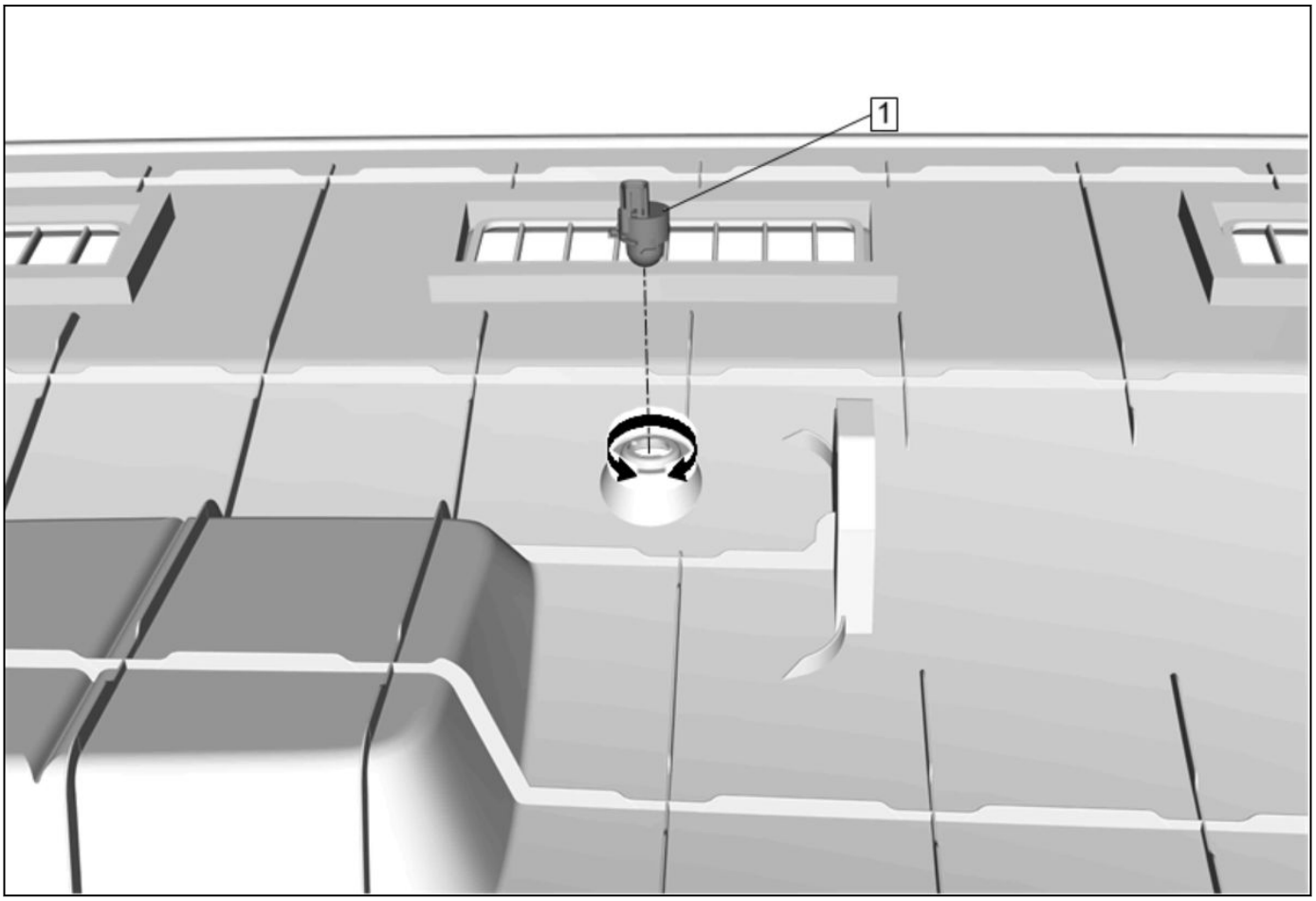

4848217

Headlamp Automatic Control Ambient Light Sensor Replacement

Callout	Component Name
Preliminary Procedure [Link target (target-id 157423-) not found]	
1	Headlamp Automatic Control Ambient Light Sensor **Procedure** 1. Turn the instrument panel upper trim panel upside down. 2. Twist and pull to remove.

Dome and Reading Lamp Replacement - Front

Removal Procedure

1. Remove the headlining front trim panel. [Link target (target-id 148367-) not found]

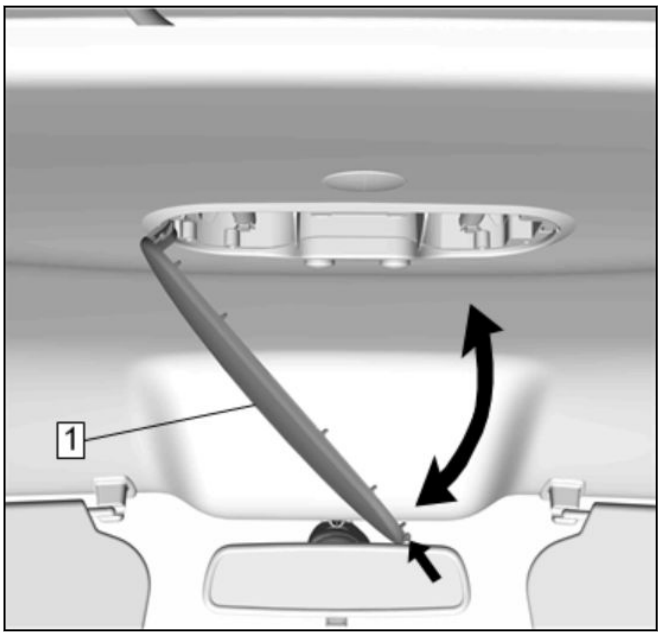

4846585

2. Using a flat bladed tool, push the tab inward and open the lens (1).

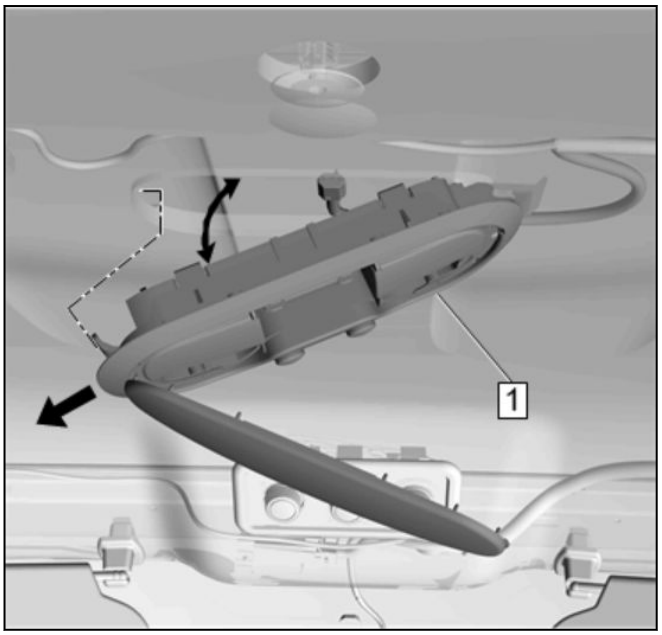

4854589

3. While opening the lens, simultaneously pull the left side down slowly to allow the lens arm to pass by the headliner opening.
4. While tilted down on the left side, move the dome lamp (1) to the left far enough for the lamp arm to pass by the headliner on the right side.
5. Lower the dome lamp (1) far enough to gain access to the connector.
6. Disconnect the electrical connector.
7. Transfer parts as necessary.

Installation Procedure

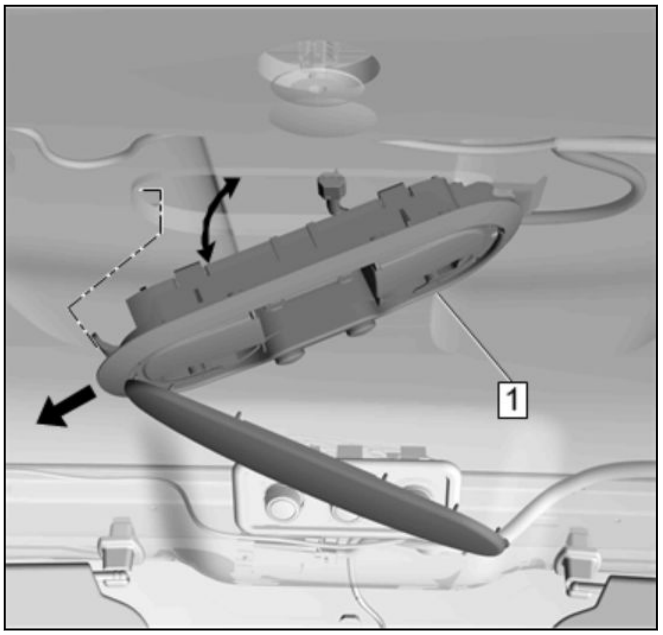

4854589

1. Position the dome and reading lamp (1) near the headliner opening.
2. Connect the electrical connector.
3. Insert the lamp housing arm at the right side above the headliner.
4. While tilted down on the left side, insert the dome lamp (1) up and to the right.

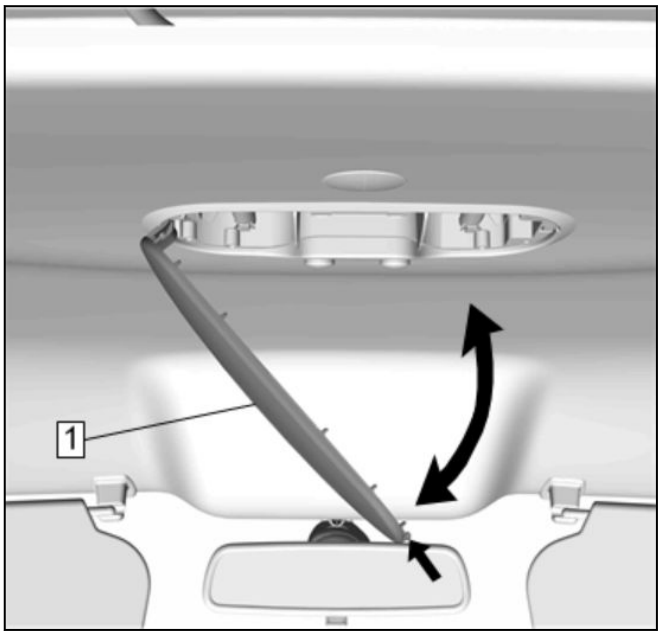

4846585

Note: The lamp lens arm on the left side is designed to hold the lamp in position when the lens is fully closed.

5. Install the left arm of the lens (1) through the lamp and headliner opening, simultaneously lifting the lamp up and close the lens (1).

6. Make sure the tab of the lens (1) has snapped back into the fully seated position.
7. Install the headlining front trim panel. [Link target (target-id 148367-) not found]

Dome and Reading Lamp Bulb Replacement

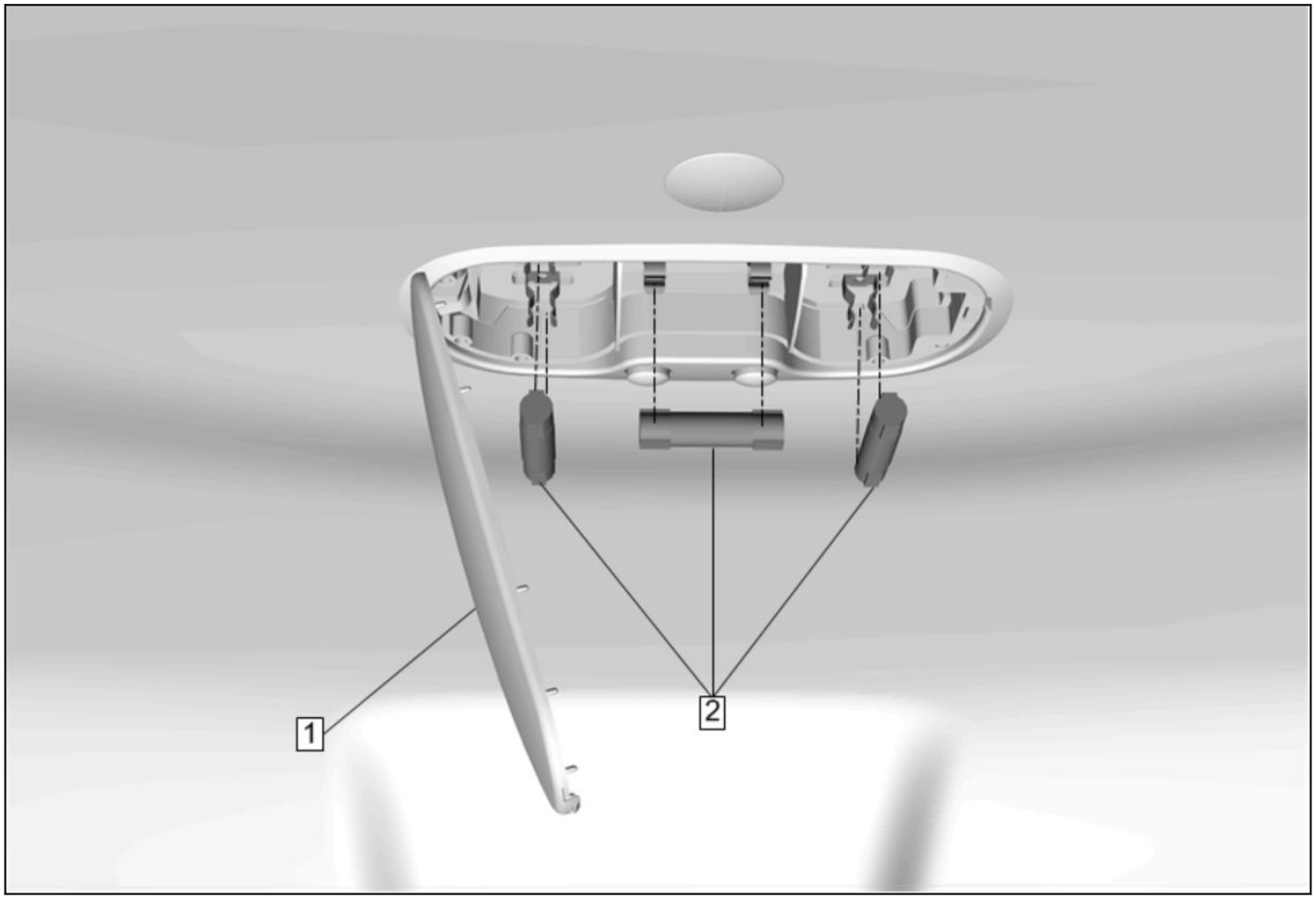

4846576

Dome and Reading Lamp Bulb Replacement

Callout	Component Name
1	Dome and Reading Lamp Lens **Procedure** Using a flat bladed tool, push the tab inward and open the lens
2	Dome Lamp Bulb [3x] **Procedure** Pull the bulb straight from the lamp socket.

Center Reading and Courtesy Lamp Replacement

Removal Procedure

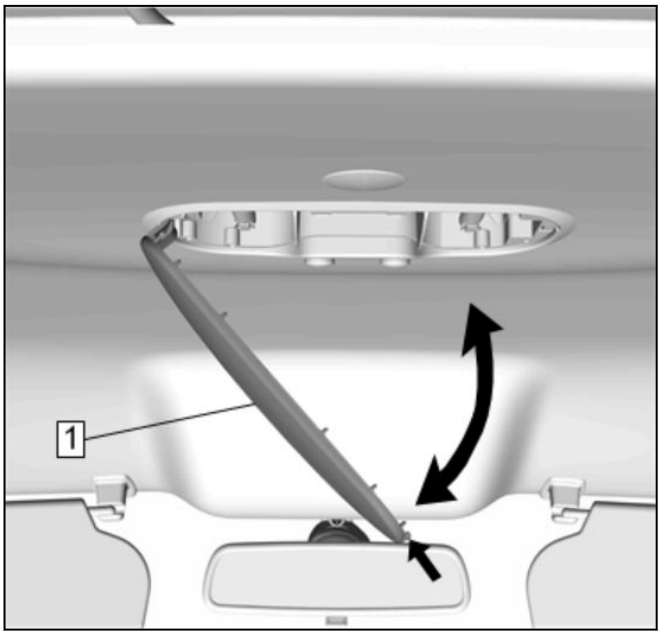

4846585

1. Using a flat bladed tool, push the tab inward and open the lens (1).

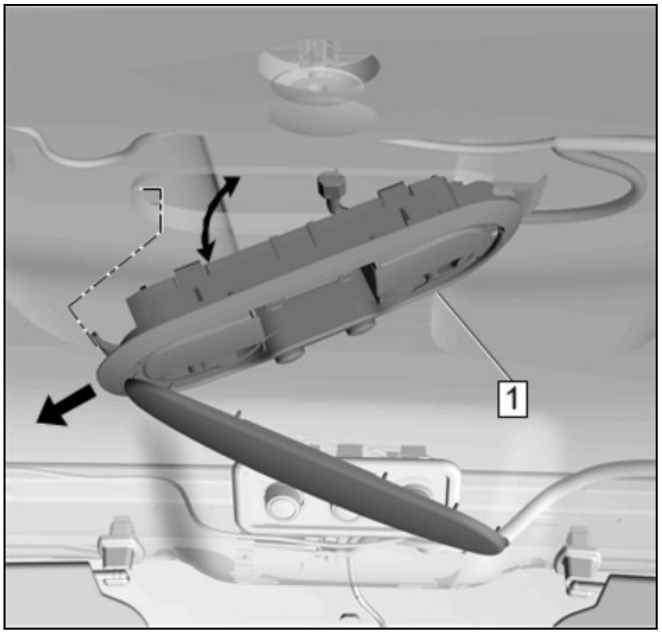

4854589

2. While opening the lens, simultaneously pull the left side down slowly to allow the lens arm to pass by the headliner opening.
3. While tilted down on the left side, move the dome lamp (1) to the left far enough for the lamp arm to pass by the headliner on the right side.
4. Lower the dome lamp (1) far enough to gain access to the connector.
5. Disconnect the electrical connector.
6. Transfer parts as necessary.

Installation Procedure

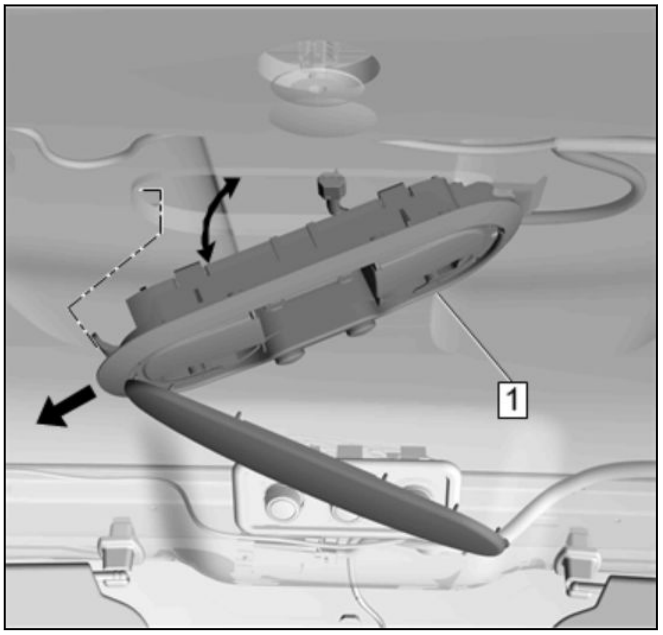

4854589

1. Position the dome and reading lamp (1) near the headliner opening.
2. Connect the electrical connector.
3. Insert the lamp housing arm at the right side above the headliner.
4. While tilted down on the left side, insert the dome lamp (1) up and to the right.

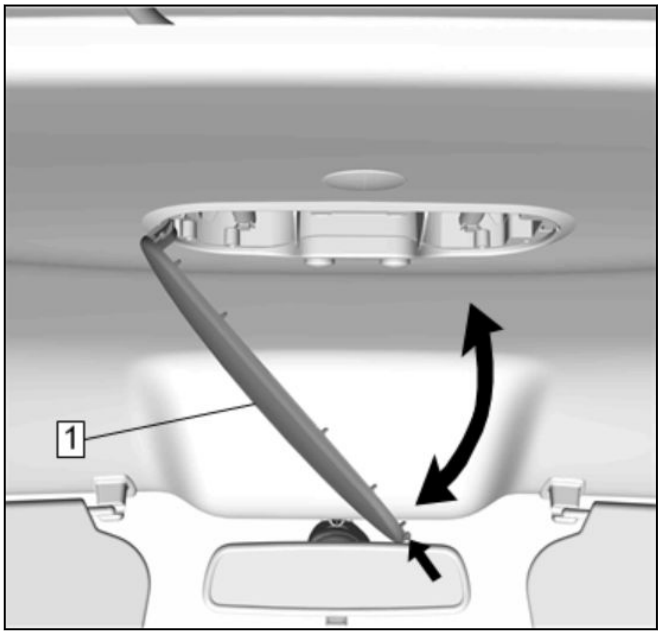

4846585

Note: The lamp lens arm on the left side is designed to hold the lamp in position when the lens is fully closed.

5. Install the left arm of the lens (1) through the lamp and headliner opening, simultaneously lifting the lamp up and close the lens (1).
6. Make sure the tab of the lens (1) has snapped back into the fully seated position.

Sunshade Illuminated Mirror Lamp Bulb Replacement

Removal Procedure

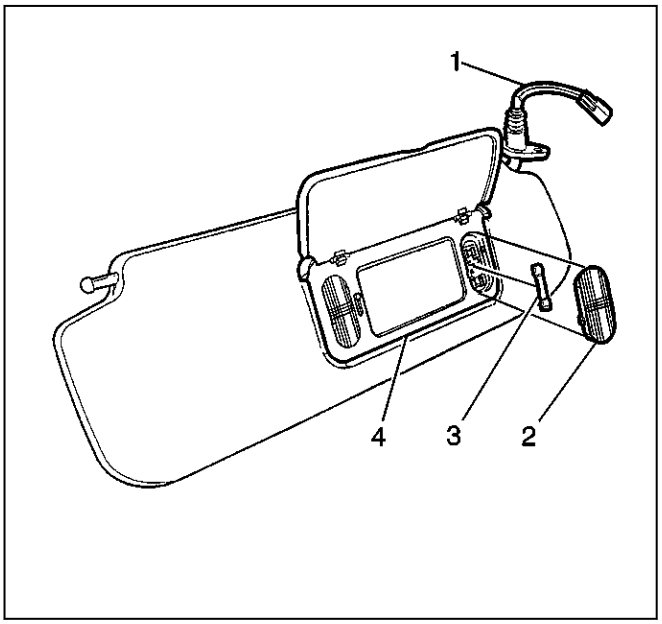

325478

1. Gently pry out the lens (2) of the vanity mirror assembly (4) with a suitable flat-bladed tool.
2. Remove the bulb (3) from the socket.

Installation Procedure

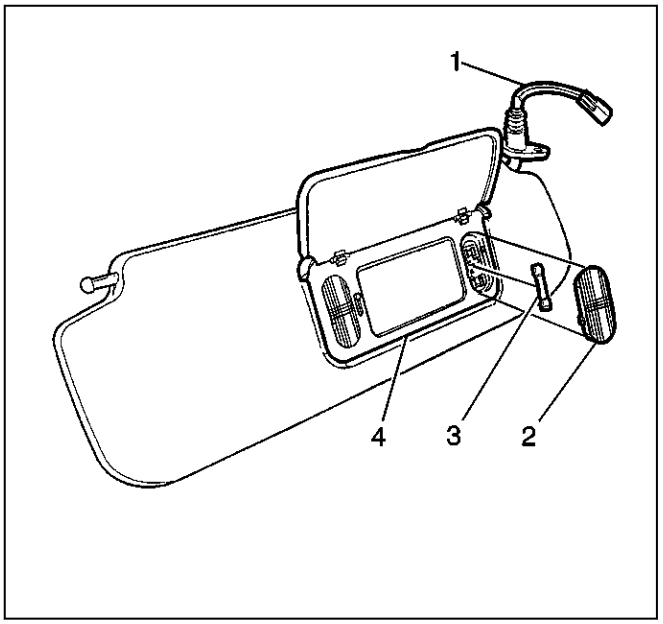

325478

1. Install the bulb (3) into the bulb socket.
2. Install the lens (2) to the vanity mirror assembly (4) by pressing it into place.

Front Headlamp Replacement

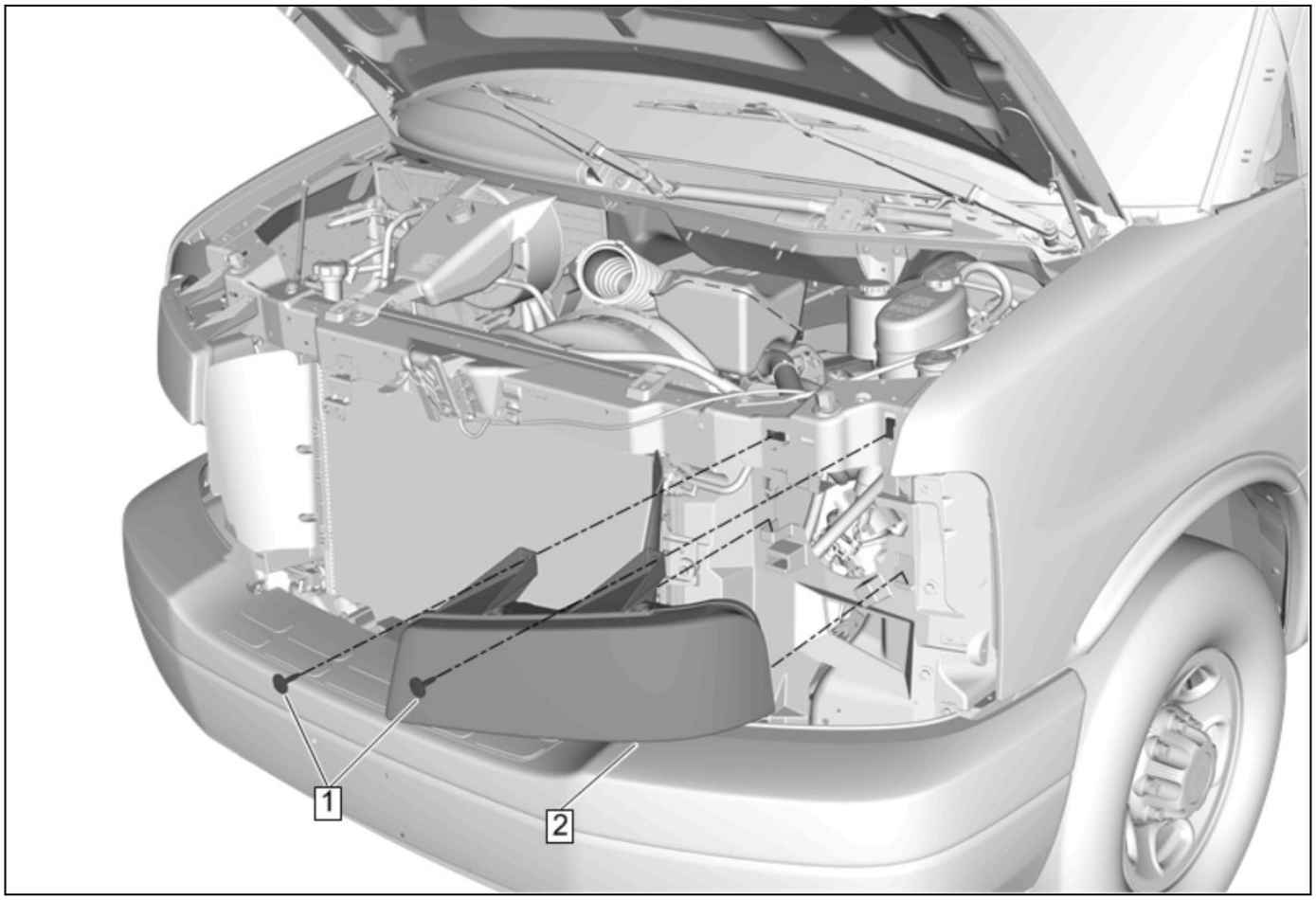

4846588

Front Headlamp Replacement

Callout	Component Name
Preliminary Procedure [Link target (target-id 161787-) not found]	
1	Headlamp Screw [2x] **Caution:** Refer to [Link target (target-id 178169-) not found] . **Tighten** **6 N•m (53 lb in)**
2	Headlamp **Procedure** 1. Disconnect all electrical connectors. 2. After installation, aim the front headlamps. *Front Headlamp Aiming 1-65*.

High Beam Headlamp Bulb Replacement

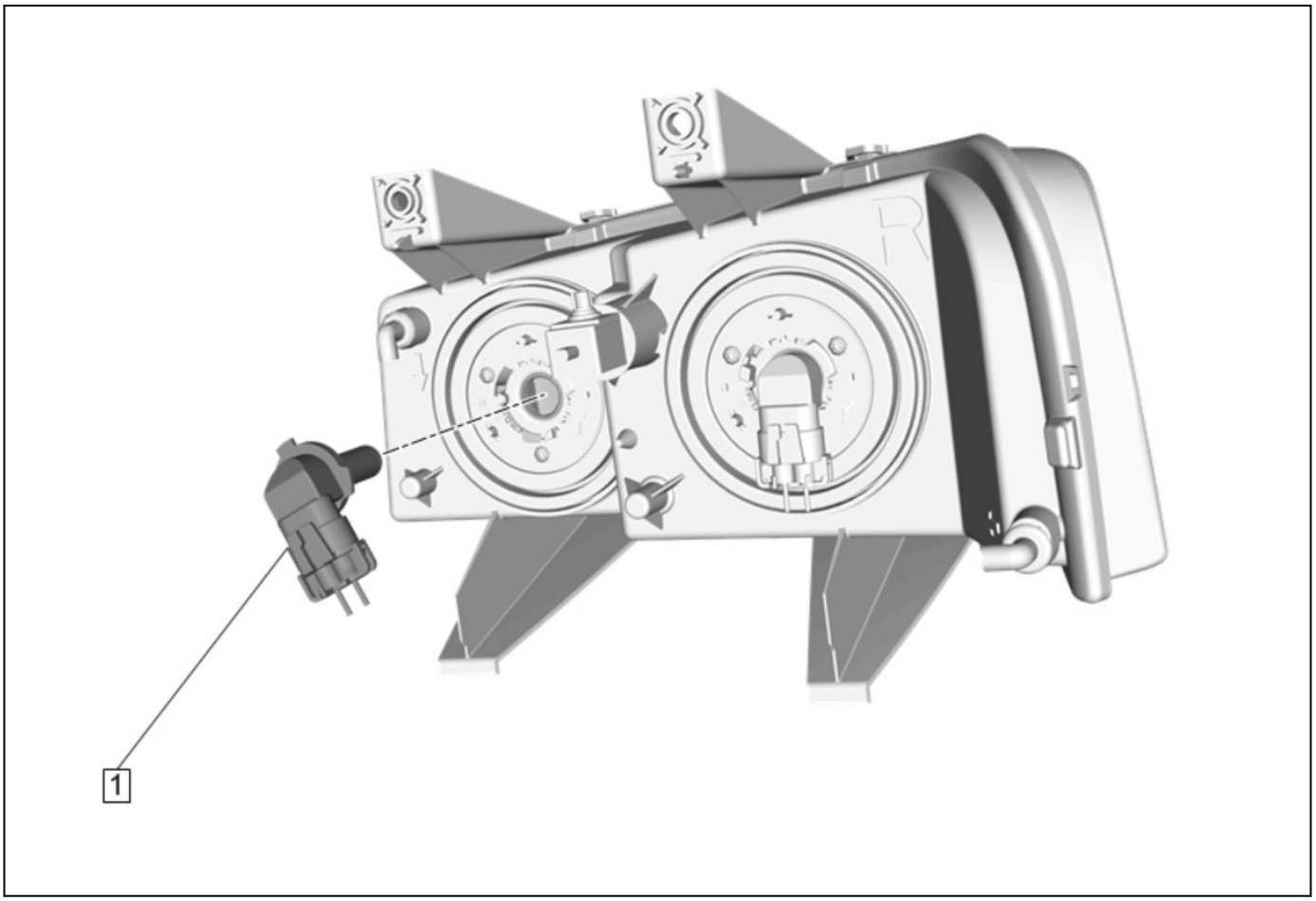

4853631

High Beam Headlamp Bulb Replacement

Callout	Component Name
Preliminary Procedure *Front Headlamp Replacement 1-63*	
1	Headlamp Bulb - High Beam ***Warning: Refer to [Link target (target-id 178051-) not found] .*** **Procedure** 1. Rotate the bulb socket counterclockwise to remove it from the lamp housing.

Low Beam Headlamp Bulb Replacement

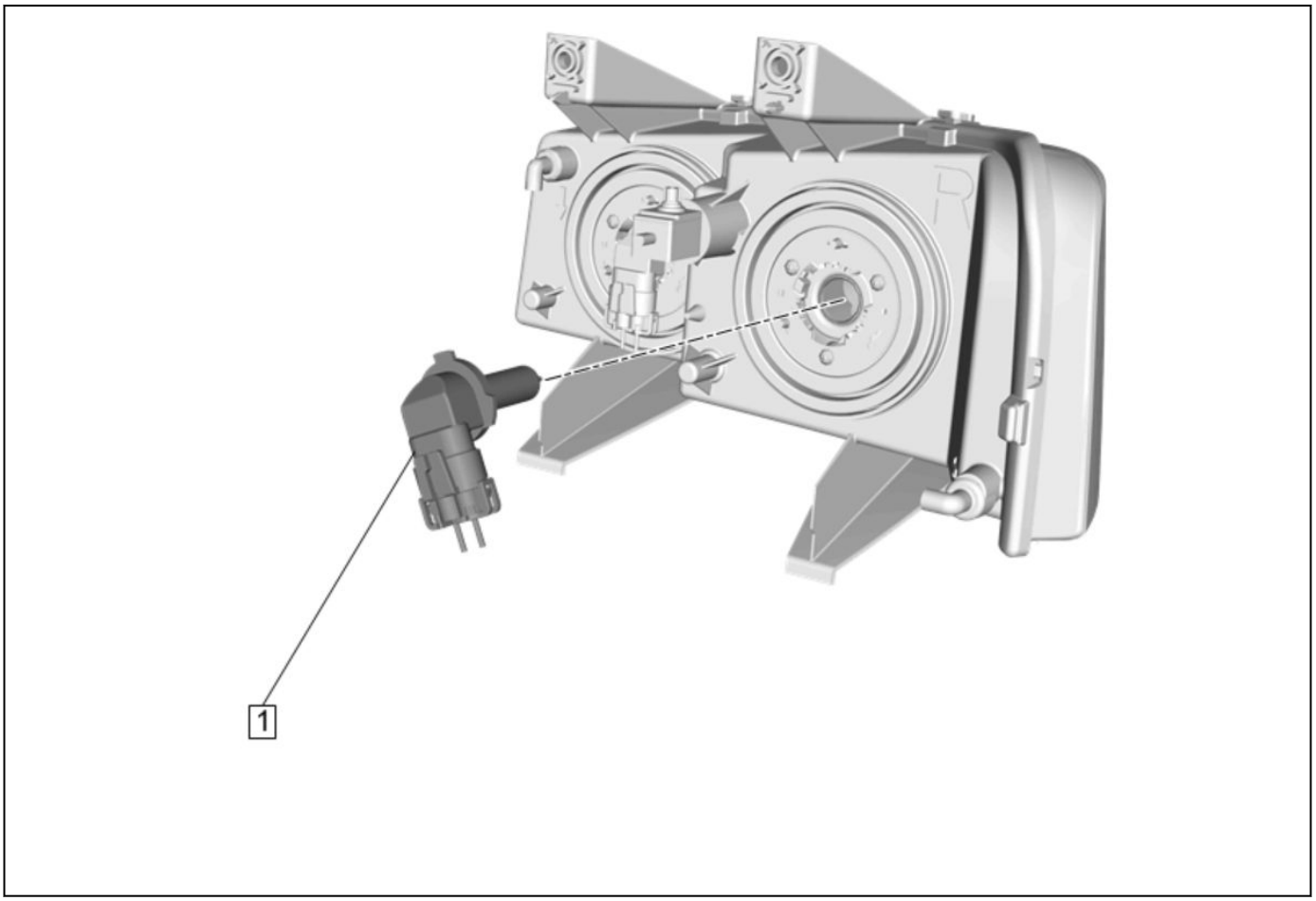

4853633

Low Beam Headlamp Bulb Replacement

Callout	Component Name
Preliminary Procedure *Front Headlamp Replacement 1-63*	
1	Headlamp Bulb - Low Beam ***Warning: Refer to [Link target (target-id 178051-) not found] .*** **Procedure** Rotate the bulb socket counterclockwise to remove it from the lamp housing.

Front Headlamp Aiming

The screen method is preferred for aiming headlamps. If the headlamp is equipped with aiming pads, headlamp aiming may be performed using the alternate procedure.

Headlamp aiming is done with the vehicle's low beam lamps. The high beam lamps will be correctly aimed if the low beam lamps are aimed properly. If the high beam needs adjustment, follow the screen method using the high beam bulb as the reference for measurements.

Screen Method for Headlamp Aiming (Visual Aim)

Important: Some state and local laws specify requirements for headlamp aim. All of these laws must be complied with when performing any headlamp aiming operations.

Headlamp aim should be checked:

- When a new headlamp capsule is installed
- If service or repairs to the front end area have (or may have) disturbed the headlamps or their mounting

- The area will consist of a level surface large enough to allow for a vehicle and an additional 7.62 m (25 feet) measured from face of lamps to the front of the aiming screen.
- The screen will be 1.52 m (5 ft) high x 3.66 m (12 ft) wide with a matte white surface well shaded from extraneous light, and properly adjusted to the floor on which the vehicle stands. Provisions may be made for moving the screen so it can be aligned parallel with the vehicle.
- The screen shall be provided with a fixed vertical centerline, two laterally adjustable vertical tapes, and one vertically adjustable horizontal tape.
- If a regular commercial aiming screen is not available, the screen may consist of a vertical wall having a clear uninterrupted area approximately 1.83 m (6 ft) high and 3.66 m (12 ft) wide. The surface should be finished with a washable non-gloss white paint.

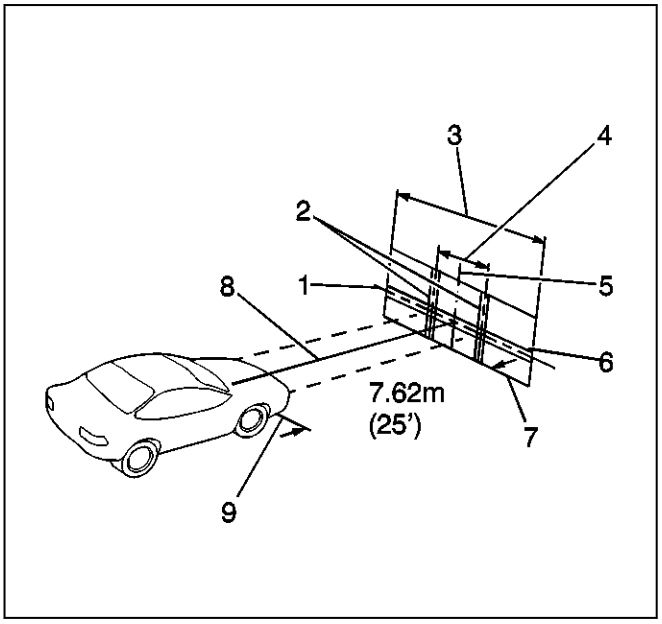

280087

- After the aiming screen has been set up in its permanent location, it is necessary to paint a reference line on the floor directly under the lens of the lamps to indicate the proper location of the headlamps when they are being aimed:
  - Distance between headlamps (1)
  - Center line of screen (2)
  - Adjustable vertical pointer (3)
  - Adjustable horizontal tape (4)
  - Diagram of light screen (5)
  - Vertical center line ahead of right headlamp pointer position (6)
  - 7.62 m (25 ft) (7)
  - Car axis (8)
  - Adjustable vertical pointer
  - Horizontal center line of lamps
  - Vertical center line ahead of left headlamp

Prior to aiming the headlamps, the following steps must be taken:

1. Remove any snow, ice or mud from the vehicle.
2. The vehicle must have a full tank of gas.
3. Stop all other work on the vehicle.
4. If any service has been performed on the vehicle, make sure that all of the components are back in their original place.
5. The vehicle must be on a level surface.

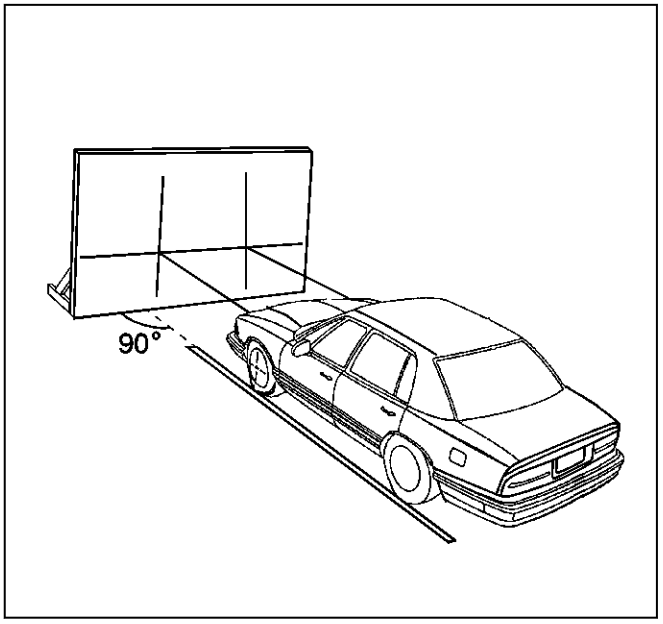

418380

6. The vehicle left tires must be aligned with the reference line extending from the screen with the headlamps aligned with the reference line.
7. Do not load any cargo in the vehicle.
8. The vehicle must contain one person or 72.56 kg (160 lb) on the driver's seat.
9. Inflate the tires to the proper pressure.
10. Simulate the vehicle loads if the intended use of the vehicle is for hauling heavy loads or towing a trailer.
11. Rock the vehicle in order to stabilize the suspension.
12. Turn on the headlamps to low beam and observe the left and the top edges of the high intensity zone on the screen. The edges of the high intensity zone should fall within the specifications.

Headlamp Aiming Procedure

1. Open the hood.

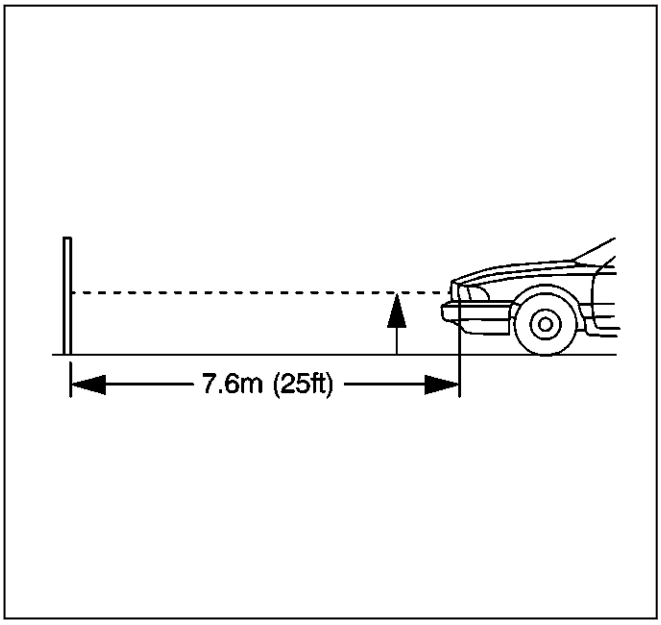

418400

2. Measure from the floor to the center of the headlamp bulb. (Some headlamps have an aim dot marked on the headlamp lens).
3. At the screen, measure from the floor and place the horizontal tape at the measured distance.
4. Measure from the reference line on the floor to the left headlamp bulb centerline.
5. At the screen, measure from the reference line and place the vertical tape at the measured distance.
6. Measure from the reference line on the floor to the right headlamp bulb centerline.
7. At the screen, measure from the reference line and place the vertical tape at the measured distance.

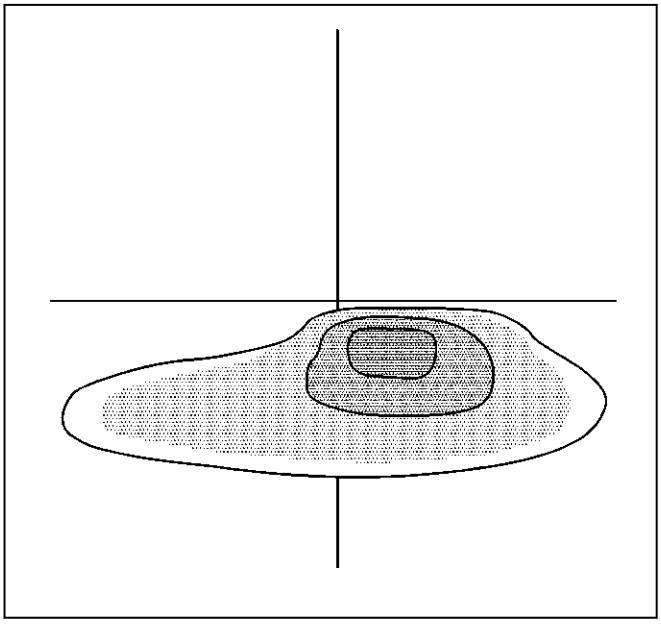

476831

Important: Do not cover the headlamp, this may cause excessive heat build up.

8. Turn on the low beam headlamps and block the light from projecting onto the screen from the passenger side headlamp.
9. Adjust the vertical aim of the headlamps to the specifications required by the state and the local authorities, or as shown in step number 8.
10. Rotate the headlamp adjuster (1) to change the vertical aim of the headlamp.
11. Repeat the aiming procedure for the passenger side headlamp while blocking the light from projecting onto the screen from the driver side headlamp.
12. Close the hood.
13. This illustration represents the visual optics left (VOL) pattern.
14. This illustration represents the visual optics right (VOR) pattern.
15. This illustration represents all headlamps, except the VOL and VOR.
16. This illustration represents the high beam pattern for all headlamps, including VOL and VOR.

Alternate Aiming Procedure

Tool Required
Composite Headlight Aimer Adapter

Instructions for use accompany the tool.

This procedure may only be used on headlamps equipped with aiming pads. Adjustment settings are embossed on the headlamp lens. They are typically located near the aiming pads. In some cases, the adjustment settings are located in other areas of the lens. They will be represented by a number followed by the letter V or the letter H.

1. Remove any snow, ice or mud from the vehicle.
2. The vehicle should be fully assembled and all other work stopped while the headlamp aiming is being done.
3. The vehicle should contain cargo or be loaded to represent normal vehicle use.
4. Tires should be properly inflated.
5. Rock the vehicle to stabilize the suspension.
6. Using , adjust the headlamps to the specifications required by state and local authorities.

Parking and Turn Signal Lamp Replacement

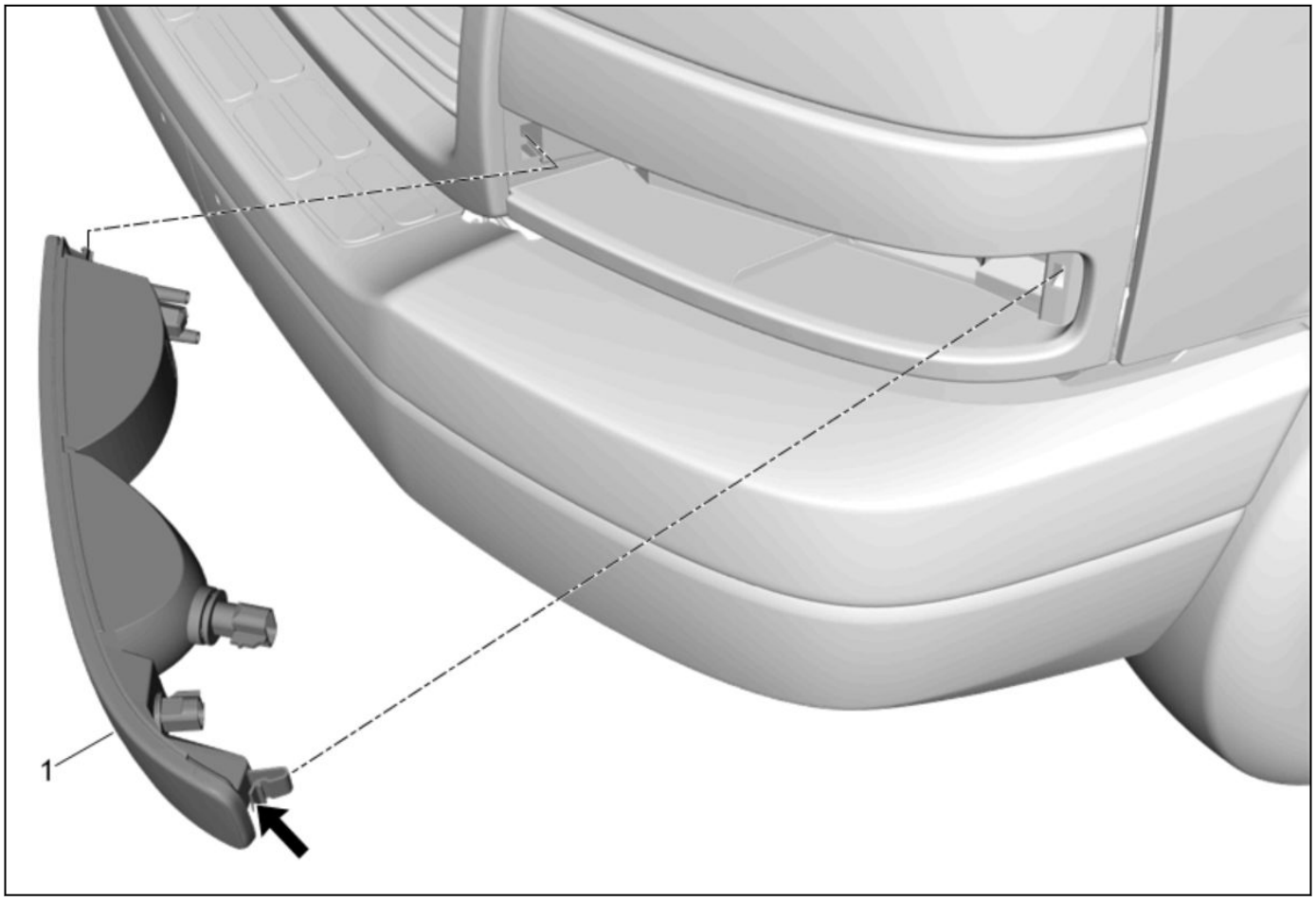

4697480

Parking and Turn Signal Lamp Replacement

Callout	Component Name
1	Parking and Turn Signal Lamp **Procedure** 1. Insert a plastic trim tool between the outer edge of the lamp and the grille to release the retainer tab. 2. Disconnect all electrical connectors. 3. Transfer components as necessary.

High Mount Stop Lamp Replacement

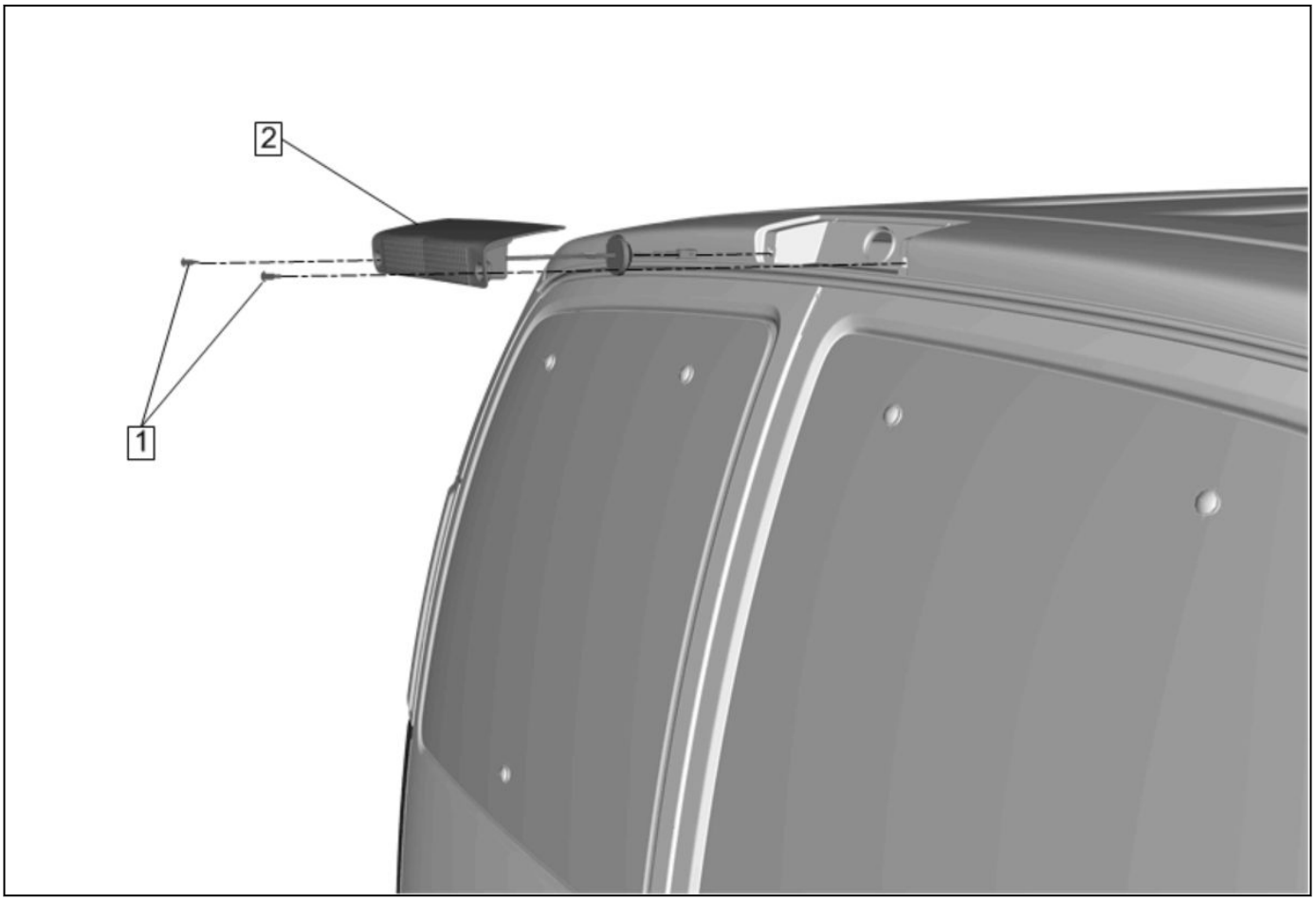

4846591

High Mount Stop Lamp Replacement

Callout	Component Name
Preliminary Procedures 1. [Link target (target-id 51655-) not found] 2. *Radio Rear Speaker Replacement - Upper 2-26*	
1	High Mount Stop Lamp Screw [2x] **Caution:** Refer to [Link target (target-id 178169-) not found] . **Tighten** 1.5 newtonm (13 lb in)
2	High Mount Stop Lamp **Procedure** Disconnect the electrical connector.

High Mount Stop Lamp Bulb Replacement

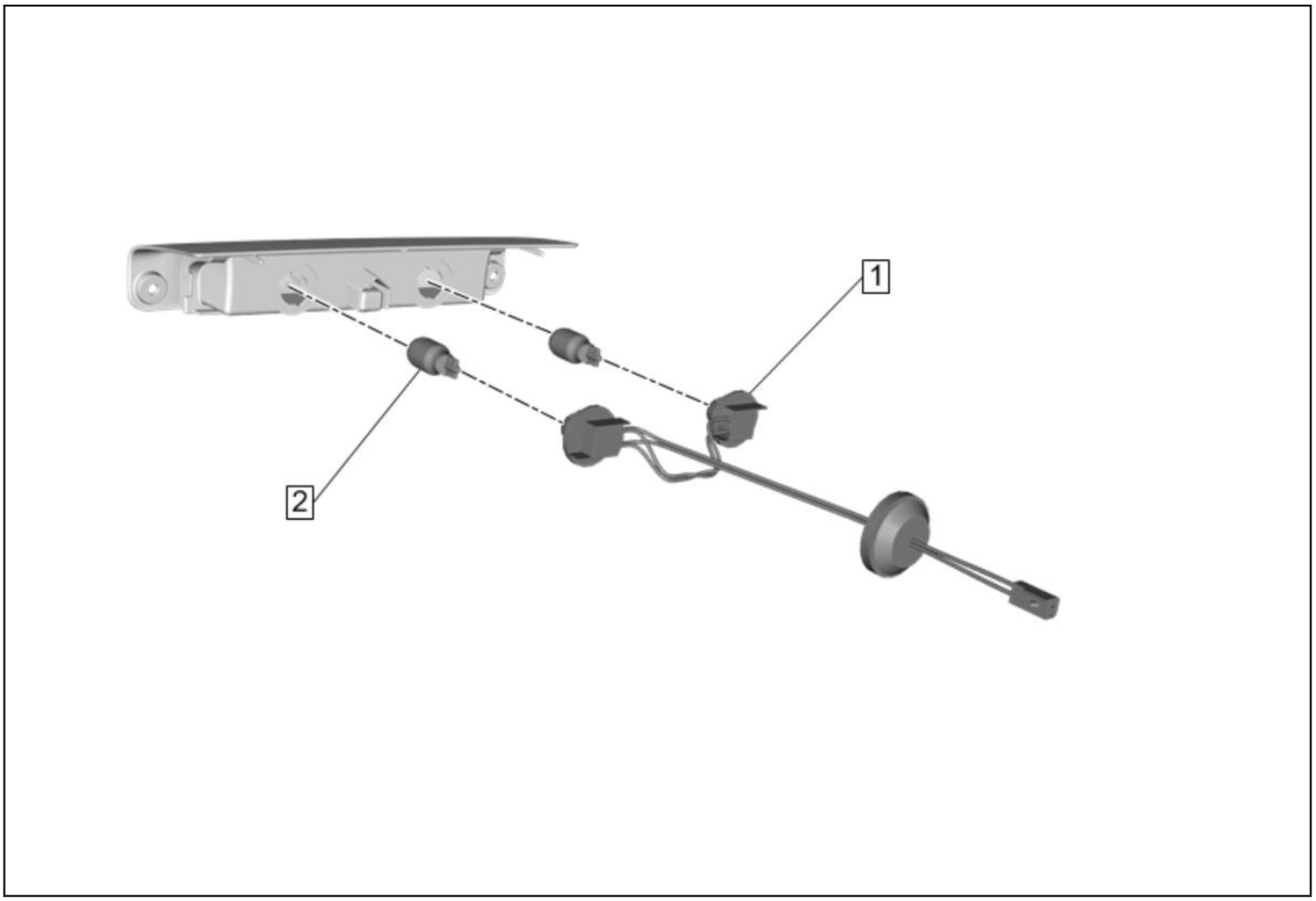

4846584

High Mount Stop Lamp Bulb Replacement

Callout	Component Name
Preliminary Procedure *High Mount Stop Lamp Replacement 1-69*	
1	High Mount Stop Lamp Bulb Socket [2x] **Procedure** Rotate the bulb socket a quarter turn counterclockwise and remove.
2	High Mount Stop Lamp Bulb [2x] **Procedure** Pull the bulb straight from the lamp socket.

Cargo Center Courtesy Lamp Replacement

Removal Procedure

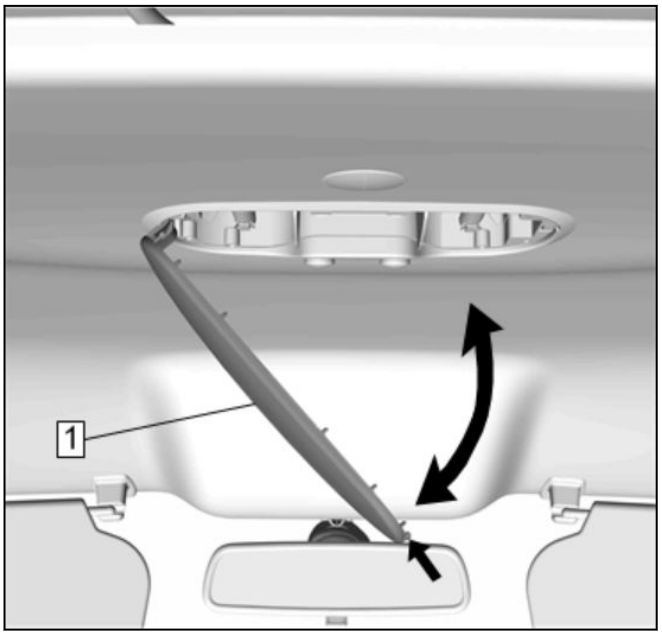

4846585

1. Using a flat bladed tool, push the tab inward and open the lens (1).

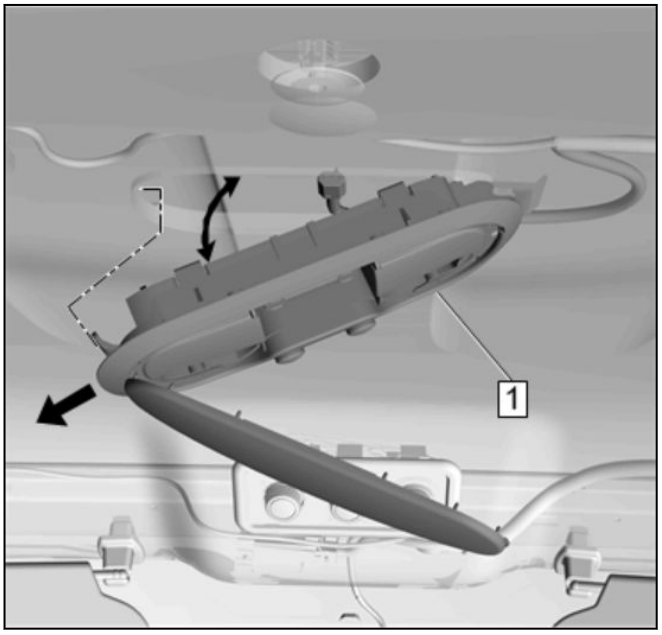

4854589

2. While opening the lens, simultaneously pull the left side down slowly to allow the lens arm to pass by the headliner opening.
3. While tilted down on the left side, move the dome lamp (1) to the left far enough for the lamp arm to pass by the headliner on the right side.
4. Lower the dome lamp (1) far enough to gain access to the connector.
5. Disconnect the electrical connector.
6. Transfer parts as necessary.

Installation Procedure

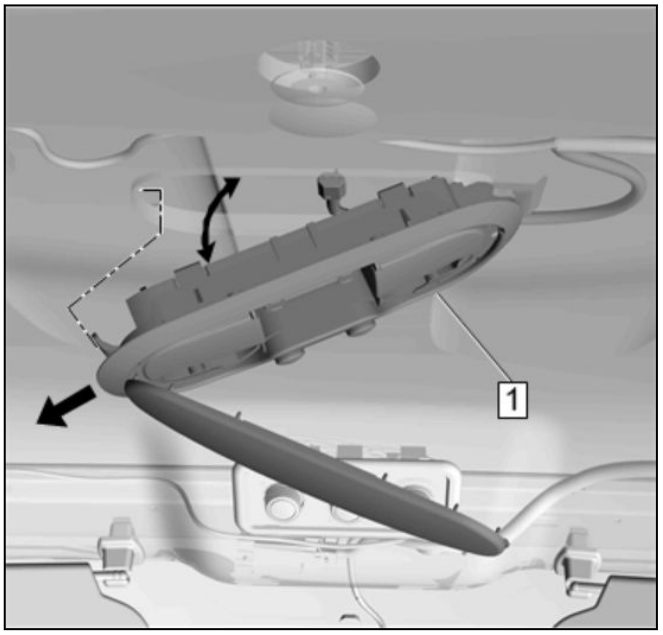

4854589

1. Position the dome and reading lamp (1) near the headliner opening.
2. Connect the electrical connector.
3. Insert the lamp housing arm at the right side above the headliner.
4. While tilted down on the left side, insert the dome lamp (1) up and to the right.

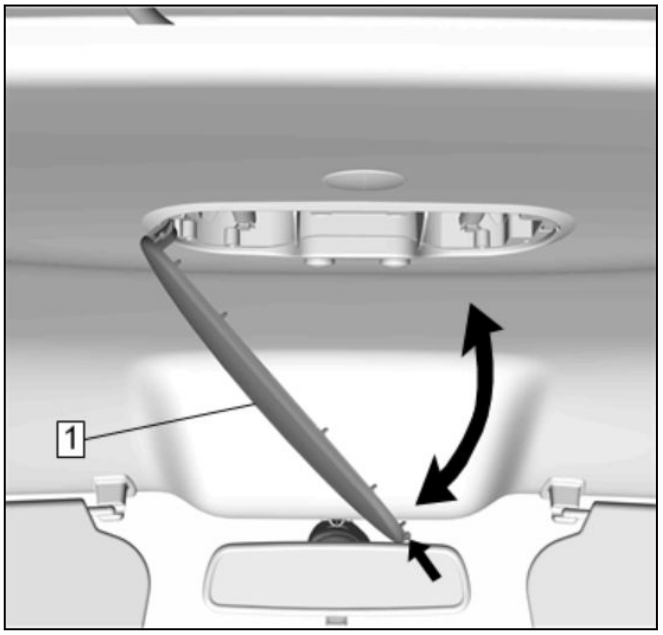

4846585

Note: The lamp lens arm on the left side is designed to hold the lamp in position when the lens is fully closed.

5. Install the left arm of the lens (1) through the lamp and headliner opening, simultaneously lifting the lamp up and close the lens (1).
6. Make sure the tab of the lens (1) has snapped back into the fully seated position.

Backup Bulb Replacement

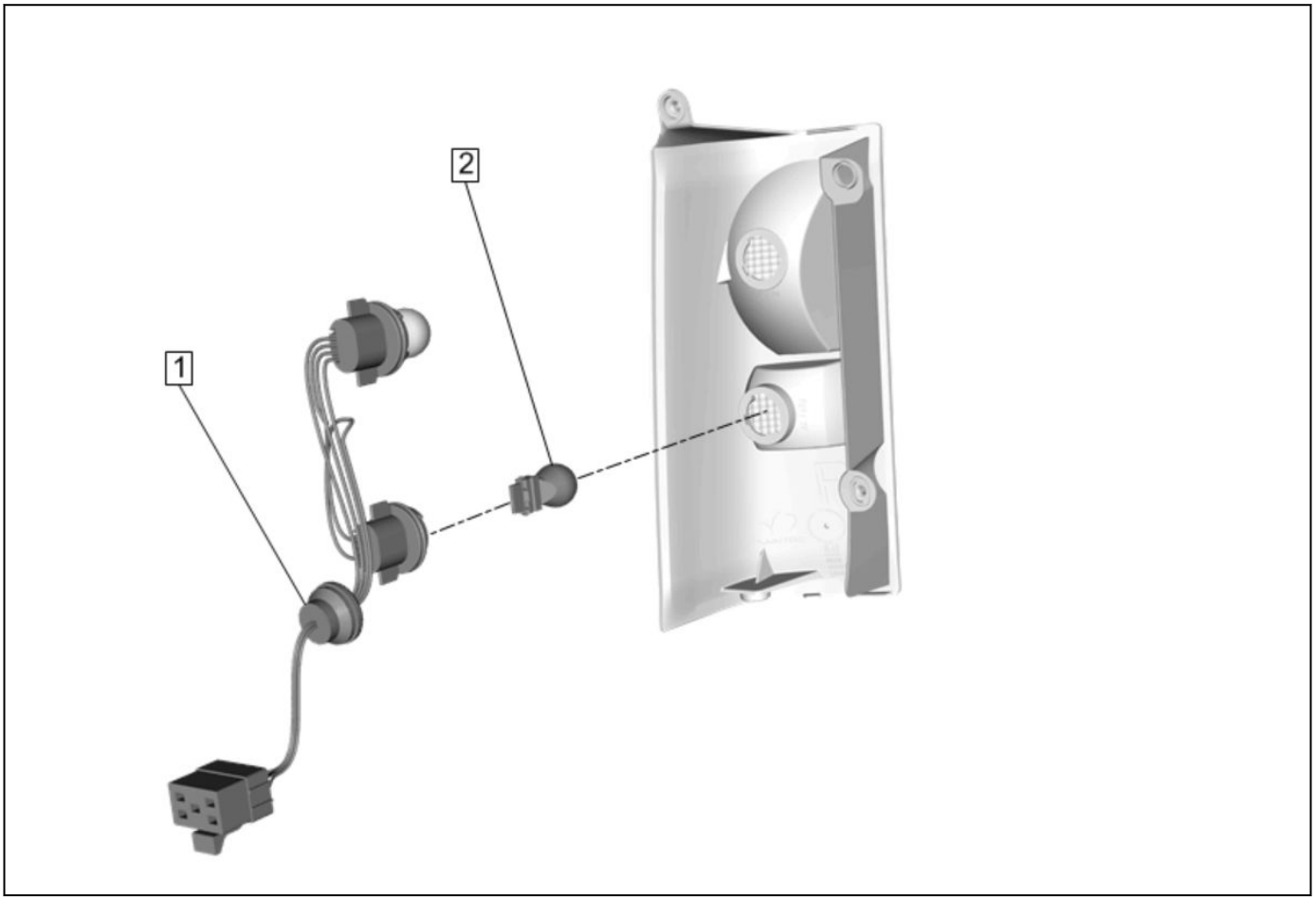

4855832

Backup Bulb Replacement

Callout	Component Name
Preliminary Procedure *Tail Lamp Replacement 1-74*	
1	Tail Lamp Wiring Harness Socket **Procedure** Rotate the bulb socket counterclockwise to remove it from the lamp housing.
2	Backup Lamp Bulb **Procedure** Pull the bulb from the bulb socket.

Rear License Plate Lamp Replacement

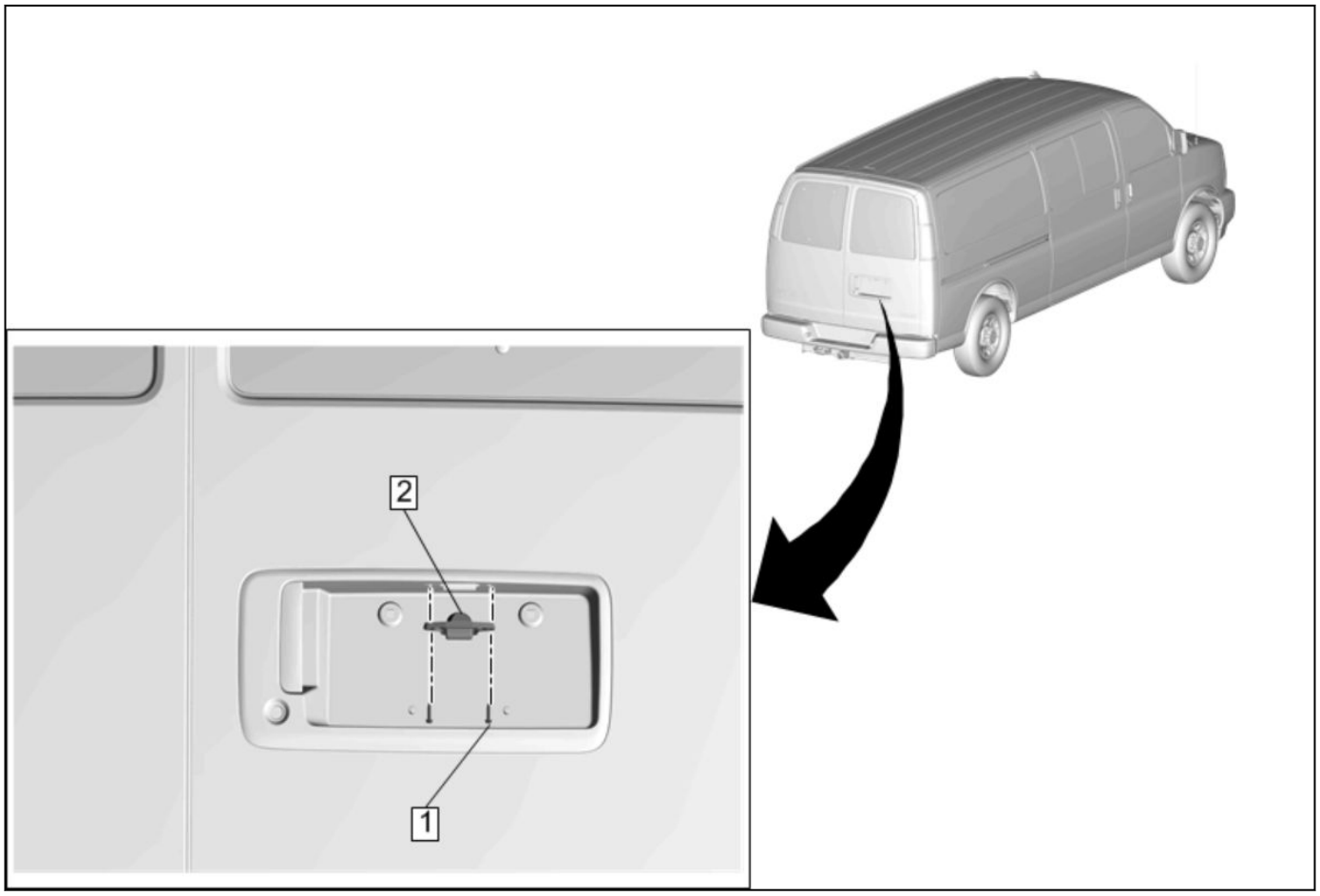

4846594

Rear License Plate Lamp Replacement

Callout	Component Name
1	License Lamp Screw [2x] **Procedure** **Caution:** Refer to [Link target (target-id 178169-) not found] . **Tighten** 1.5 newtonm (13 lb in)
2	Rear License Plate Lamp **Procedure** Disconnect the electrical connector.

Tail Lamp Replacement

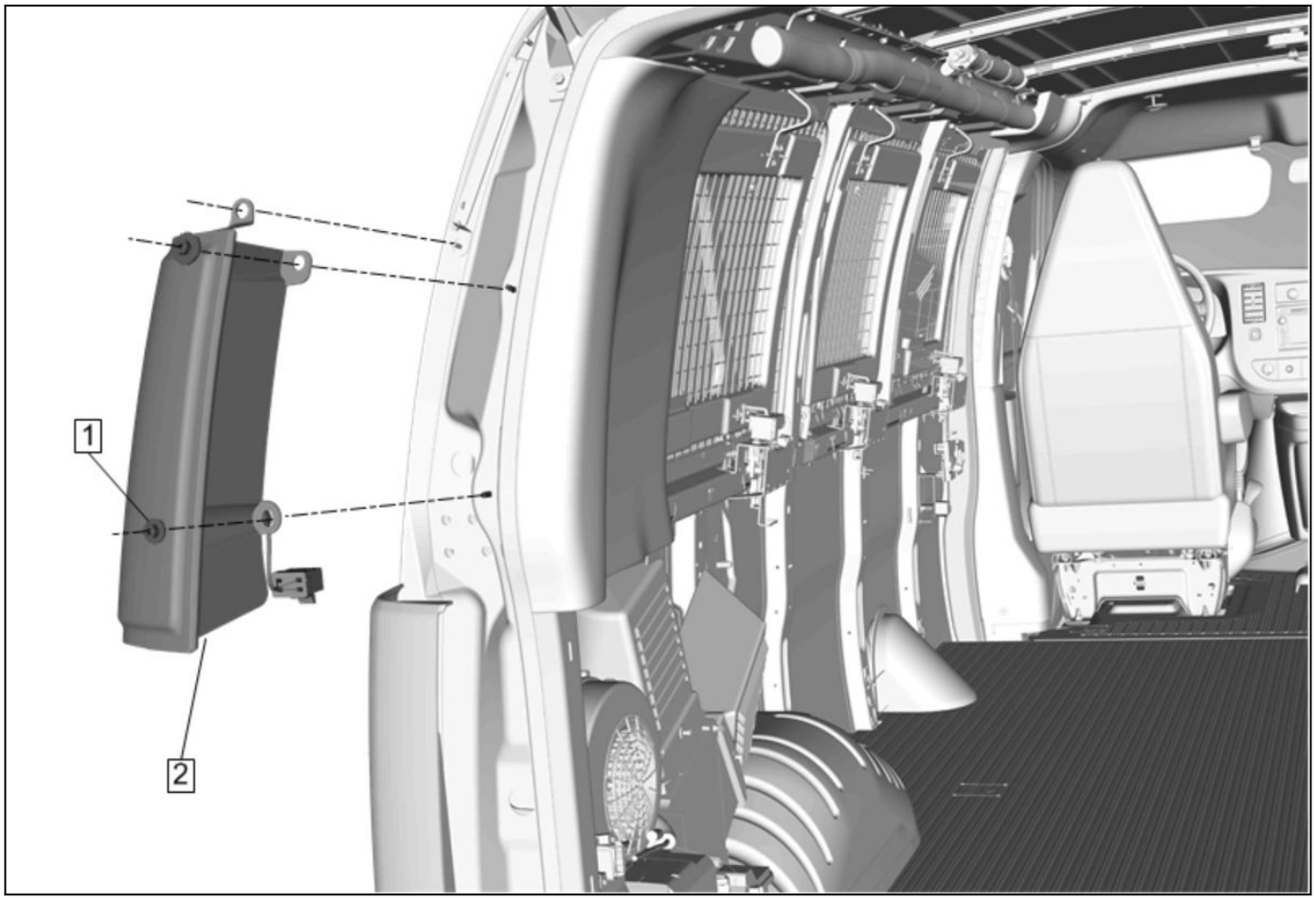

4846593

Tail Lamp Replacement

Callout	Component Name
Preliminary Procedures 1. [Link target (target-id 148263-) not found] 2. [Link target (target-id 51655-) not found]	
1	Tail Lamp Nut [2x] **Caution:** Refer to [Link target (target-id 178169-) not found] . **Tighten** **5 N•m (44 lb in)**
2	Tail Lamp **Procedure** 1. Disconnect the electrical connector. 2. Transfer components as necessary.

Stop and Tail Lamp Bulb Replacement

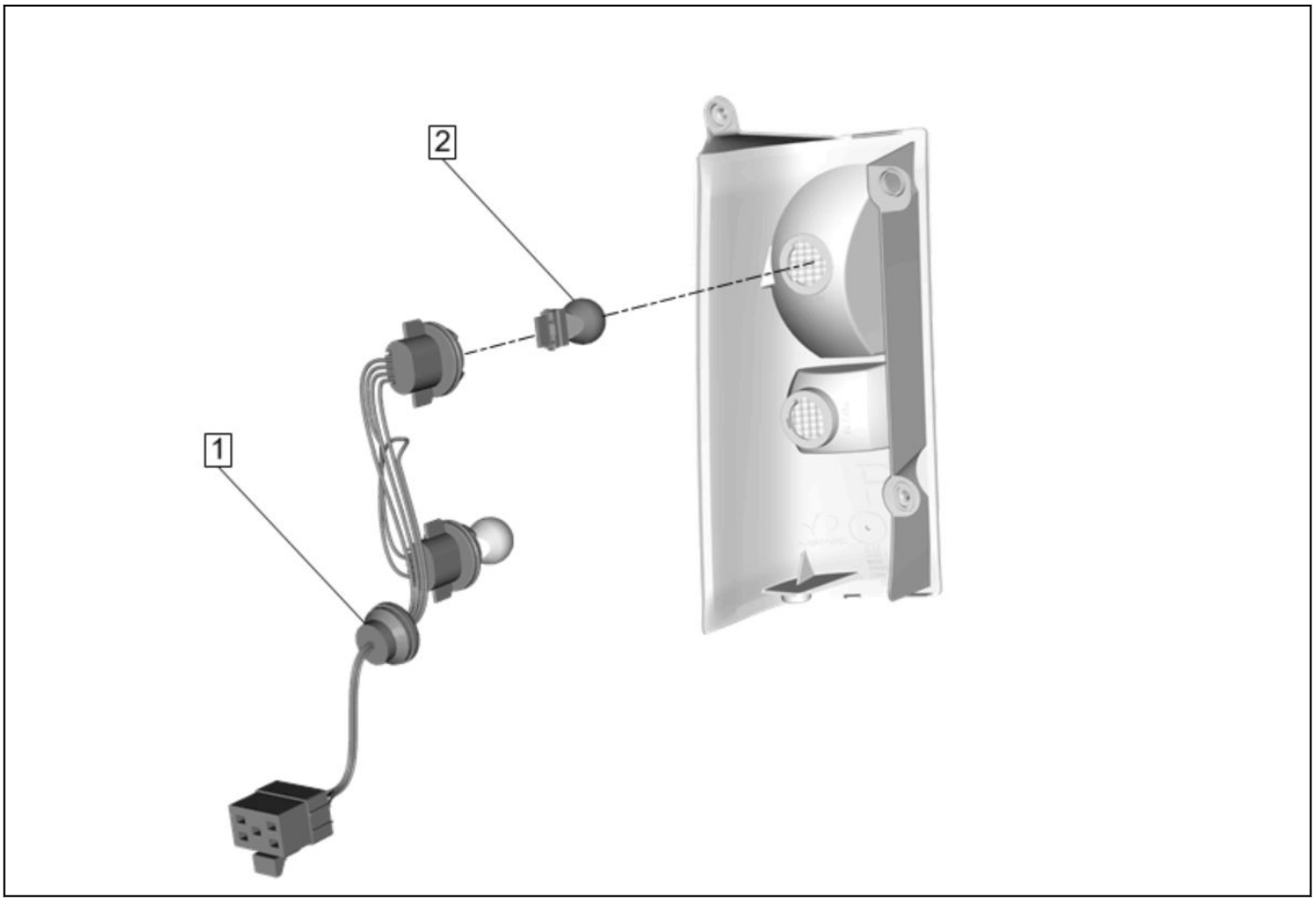

4855829

Stop and Tail Lamp Bulb Replacement

Callout	Component Name
Preliminary Procedure *Tail Lamp Replacement 1-74*	
1	Tail Lamp Wiring Harness Socket **Procedure** Rotate the bulb socket counterclockwise to remove it from the lamp housing.
2	Stop and Tail Lamp Bulb **Procedure** Pull the bulb from the bulb socket.

Mirrors

Specifications

Fastener Specifications

Reusable Threaded Fastener Tightening Specifications

Note: All fasteners listed in this table can be reused after removal.	
Application	Specification
	Metric (English)
Commercial Outside Rearview Mirror Head Nut	4 newtonm (35 lb in)
Commercial Outside Rearview Mirror Pivot Nut	12 newtonm (106 lb in)
Inside Rearview Mirror Screw	2newtonm (18 lb in)
Outside Rearview Camper Mirror Head Nut	4 newtonm (35 lb in)
Outside Rearview Mirror Lower Glass Screw	2newtonm (18 lb in)
Outside Rearview Mirror Nut	10 newtonm (89 lb in)
Rearview Mirror Filler Nut	10 newtonm (89 lb in)

Schematic and Routing Diagrams

7085673

Outside Rearview Mirror Schematics (Pan and Tilt (DE5))

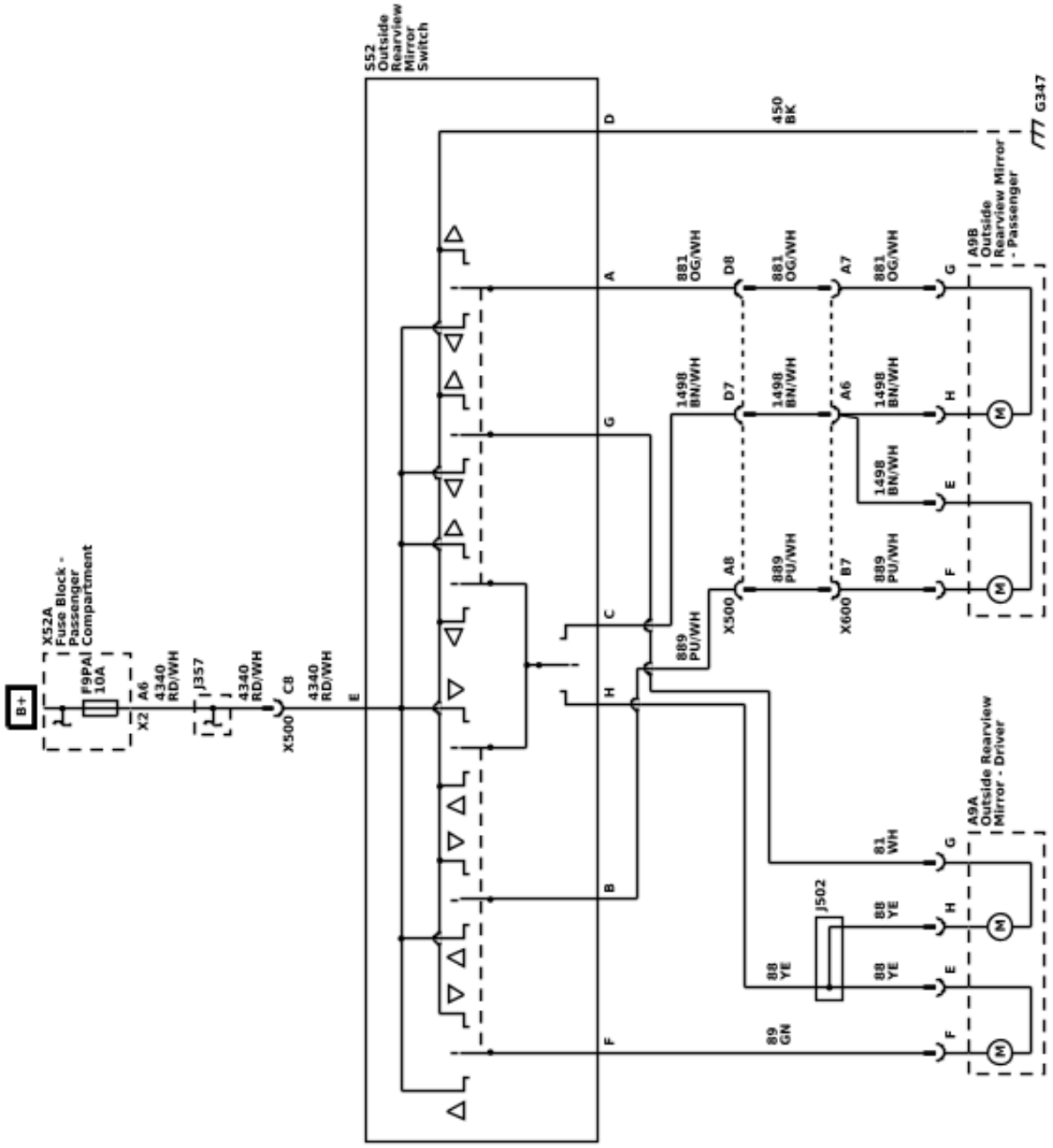

Outside Rearview Mirror Schematics (Heated Mirrors (DE5))

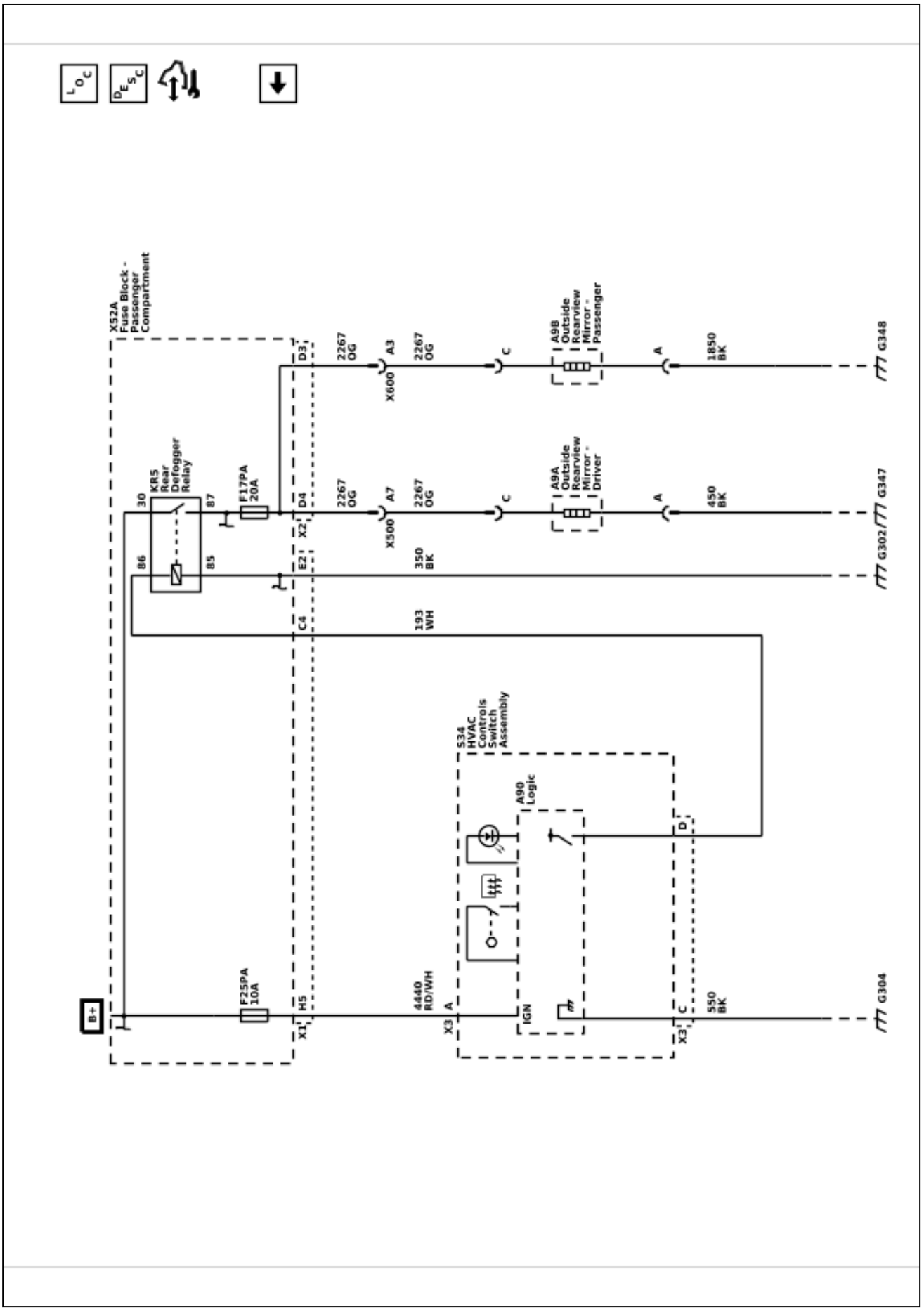

Repair Instructions

Outside Rearview Mirror Opening Cover Replacement

Removal Procedure

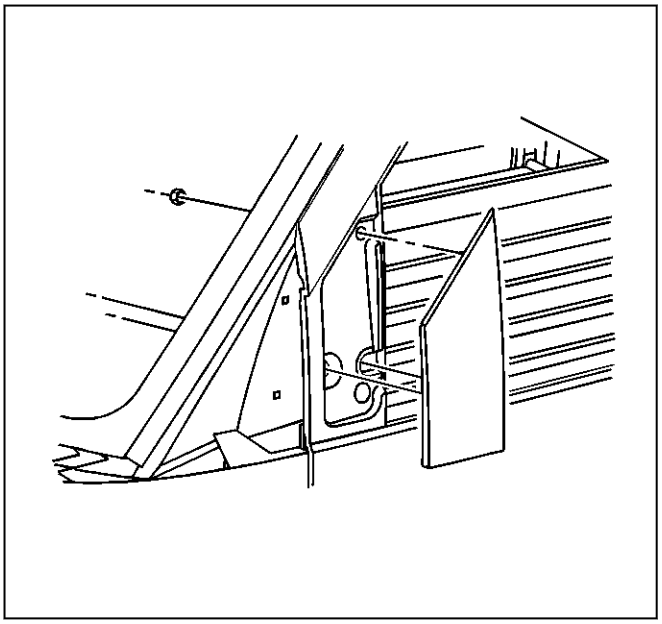

334019

1. Remove the front door garnish molding. Refer to [Link target (target-id 149896-) not found] .
2. Remove the electrical connector from the rearview mirror.
3. Remove the nuts that retain the rearview mirror filler to the door.
4. Remove the rearview mirror filler from the door.

Installation Procedure

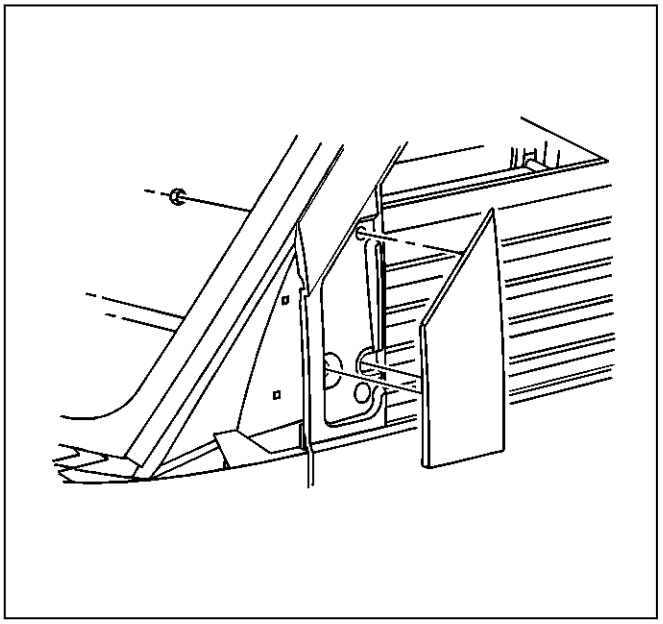

334019

1. Install the rearview mirror filler to the door.

Caution: Refer to [Link target (target-id 178169-) not found] .

2. Install the nuts in order to retain the rearview mirror filler to the door and tighten to **10 newtonm (89 lb in)**.
3. Install the front door front garnish molding. Refer to [Link target (target-id 149896-) not found] .

Power Mirror Switch Replacement

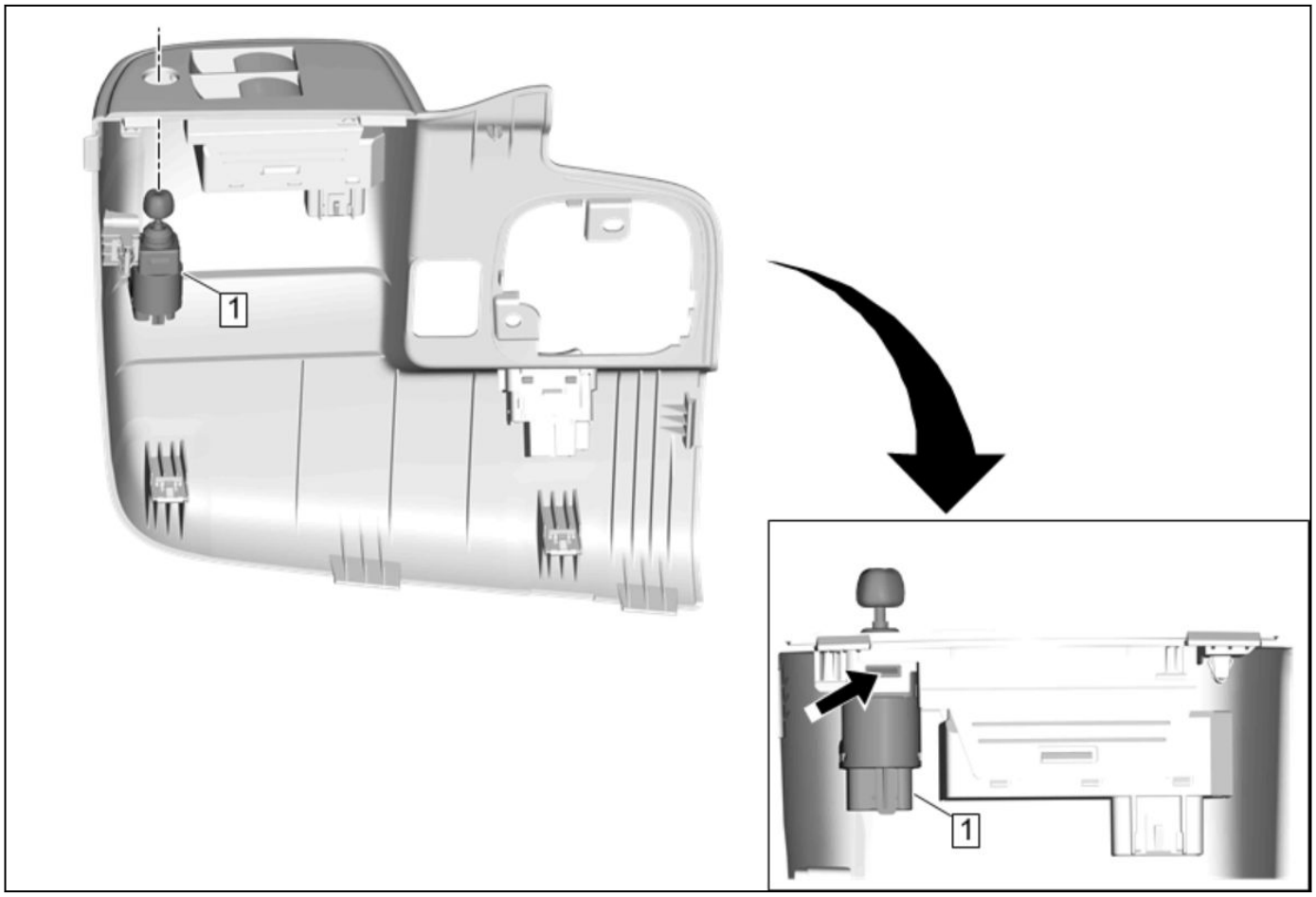

4862820

Power Mirror Switch Replacement

Callout	Component Name
Preliminary Procedure [Link target (target-id 149959-) not found]	
1	Power Mirror Switch **Procedure** From the backside of the front door trim plate, use a plastic trim tool to gently push in on the side tabs to release the switch from the front door trim plate.

Manual Mirror Replacement (DE2)

Removal Procedure

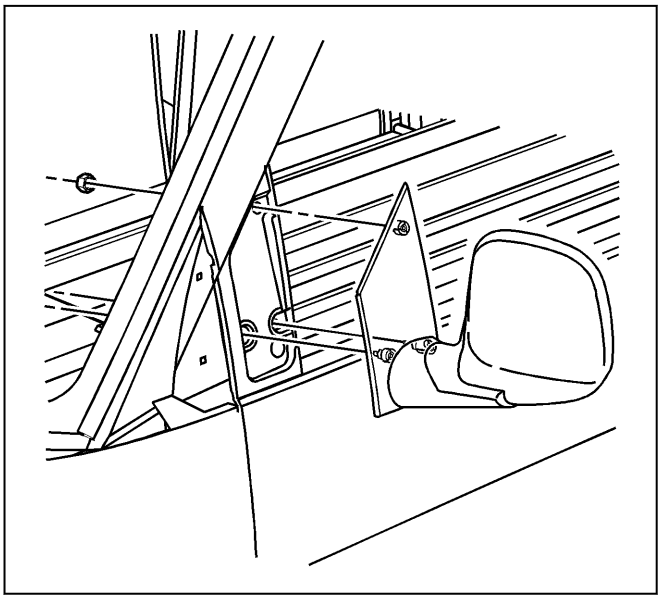

334021

1. Remove the front door garnish molding. Refer to [Link target (target-id 149896-) not found] .
2. Remove the nuts that retain the rearview mirror to the door.
3. Remove the rearview mirror from the door.

Installation Procedure

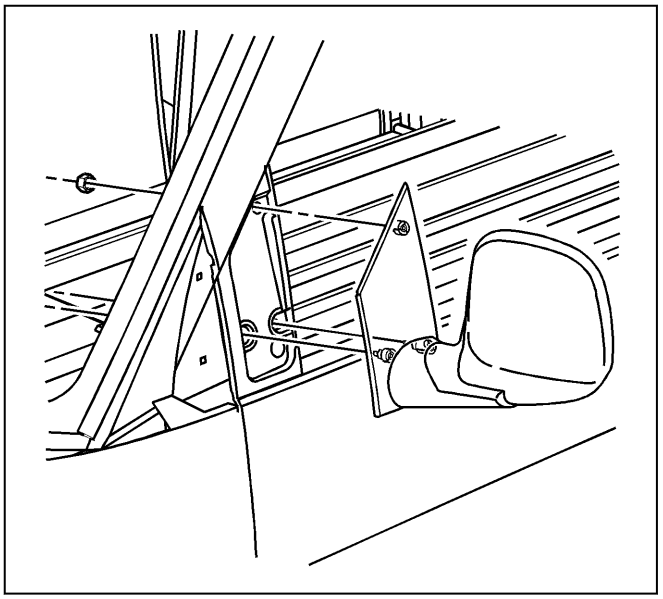

334021

1. Install the rearview mirror to the door.

Caution: Refer to [Link target (target-id 178169-) not found] .

2. Install the nuts in order to retain the rearview mirror to the door and tighten to **10 newtonm (89 lb in)**.
3. Install the front door front garnish molding. Refer to [Link target (target-id 149896-) not found] .

Manual Mirror Replacement (DHC)

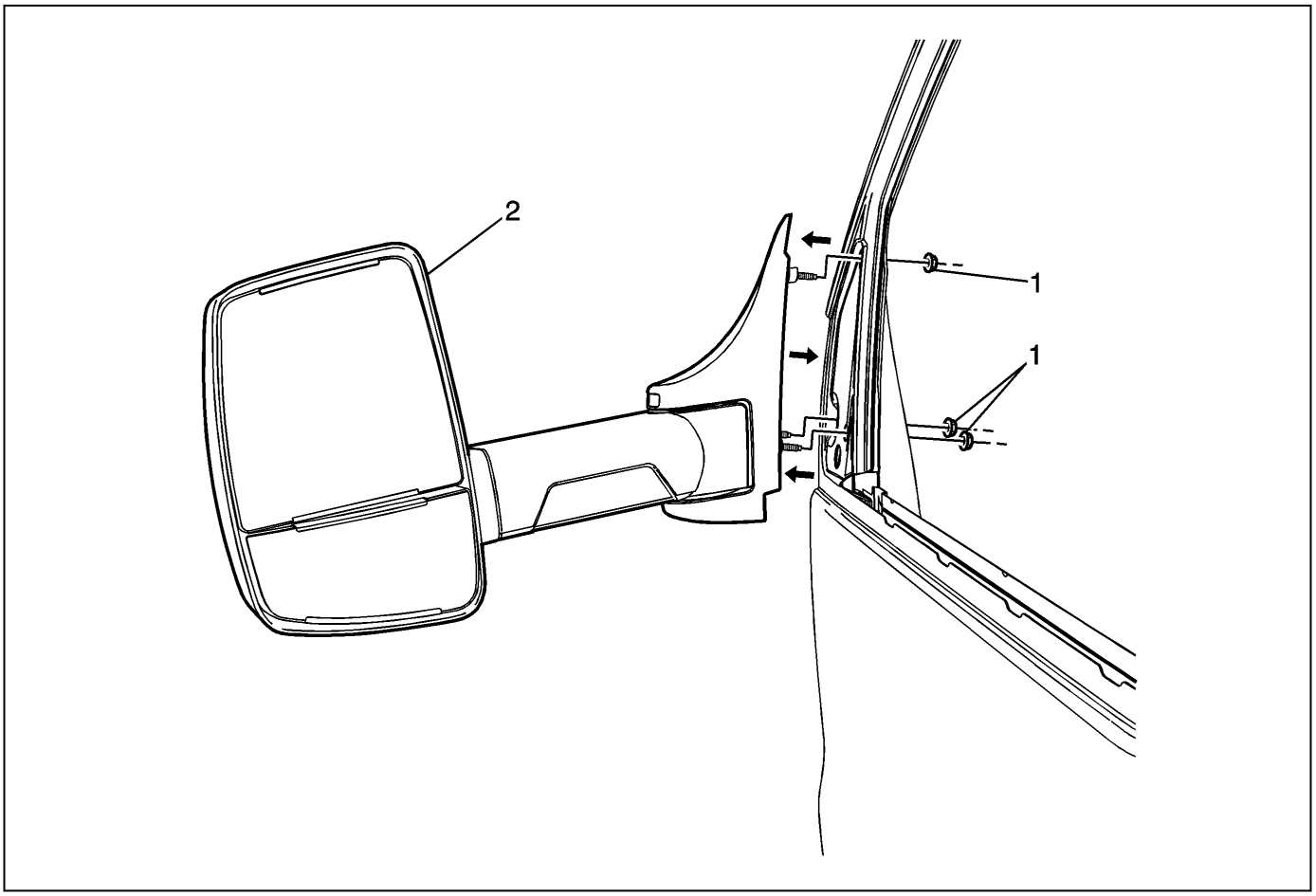

2332721

Manual Mirror Replacement (DHC)

Callout	Component Name
Preliminary Procedures 1. Place the window in the fully down position. 2. Remove front door trim panel. Refer to [Link target (target-id 149959-) not found] .	
1	Outside Rearview Mirror Nut (Qty: 3) **Caution:** Refer to [Link target (target-id 178169-) not found] Fastener Caution . **Procedure** 1. Take the weight off the three mirror studs using an aid to assist in holding the mirror in place, then follow the torque sequence steps below. 2. Torque the front nut first. 3. Torque the top nut second. 4. Torque the rear nut last. 5. Check static torque (should be no less then 8 Nm). **Tighten** 10 newtonm (89 lb in).
2	Outside Rearview Mirror

Power Mirror Replacement

Removal Procedure

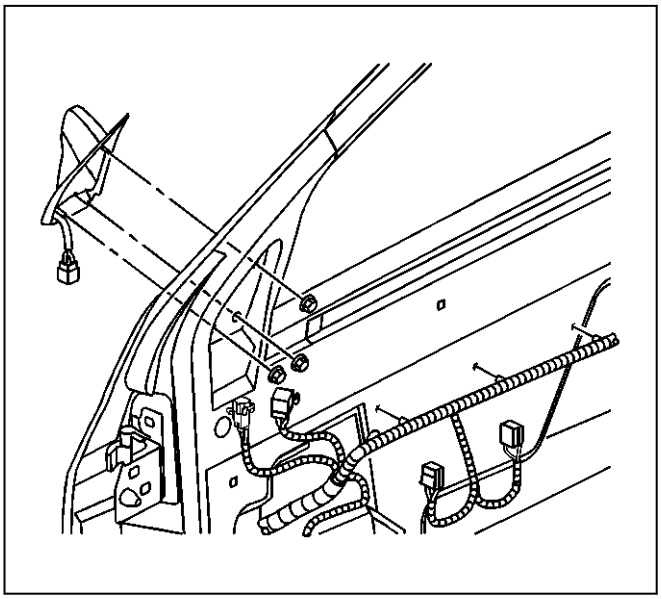

621571

1. Remove the front door trim panel. Refer to [Link target (target-id 149952-) not found] .
2. Remove the nuts from the outside rearview mirror.
3. Disconnect the electrical connector from the outside rearview mirror.
4. Remove the outside rearview mirror from the front door.

Installation Procedure

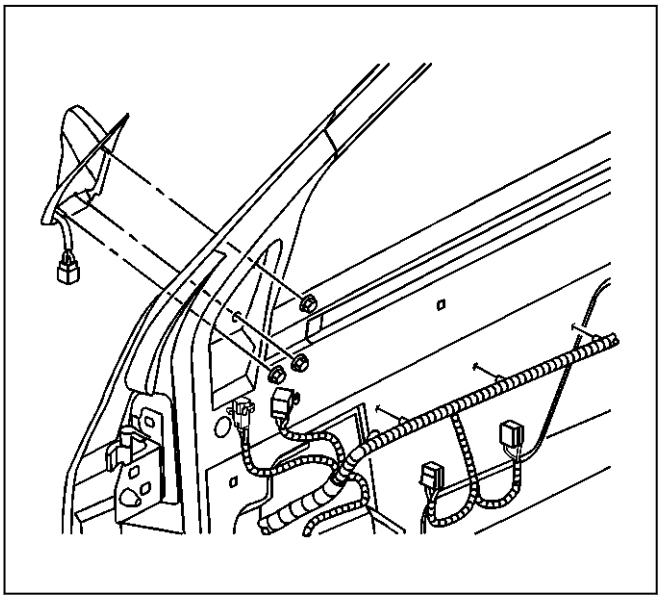

621571

1. Install the outside rearview mirror to the front door.

Caution: Refer to [Link target (target-id 178169-) not found] .

2. Install the outside rearview mirror nuts and tighten to **10 newtonm (89 lb in)**.
3. Connect the electrical connector to the outside rearview mirror.
4. Install the front door trim panel. Refer to [Link target (target-id 149952-) not found] .

Outside Rearview Mirror Glass Replacement (Base Level)

Removal Procedure

Warning: When working with any type of glass or sheet metal with exposed or rough edges, wear approved safety glasses and gloves in order to reduce the chance of personal injury.

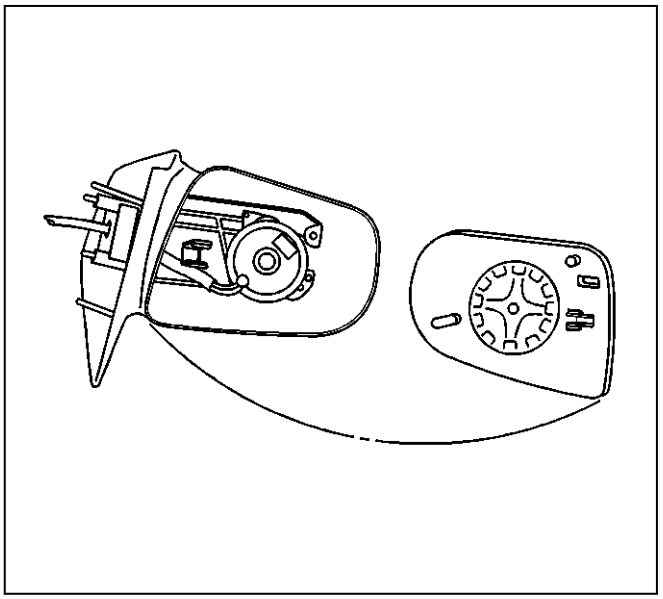

625764

1. Remove the damaged mirror back and the glass-assembly from the mirror housing by completing the following steps:
   1.1. Insert your fingers as far as possible behind the mirror back toward the center of the back.
   1.2. With force sufficient in order to disengage the snap-fits from the adjuster mechanism, pull the mirror back out of the housing.
2. Inspect the adjuster mechanism for damage.
3. If the mirror has the heated feature, unplug the 2 electrical connections from the mirror back.
4. Remove the mirror face from the mirror housing.

Installation Procedure

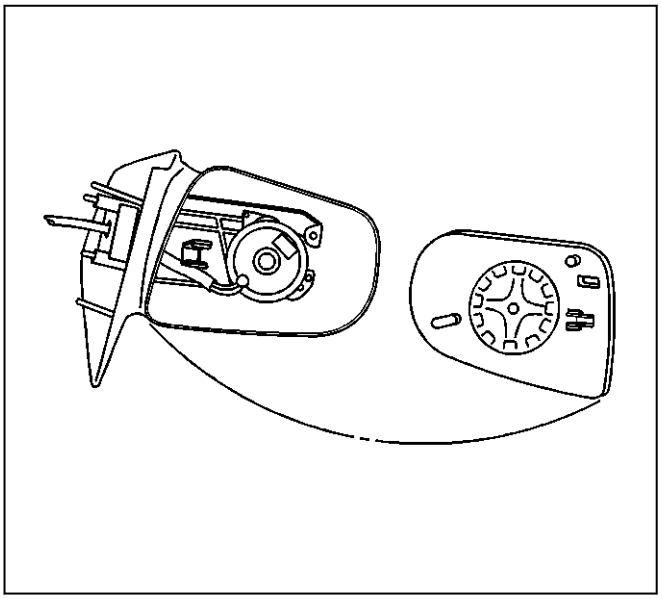

625764

1. Remove the replacement mirror back and glass sub-assembly from the package.
2. Inspect the components for any damage. Ensure that the mirror back and the glass sub-assembly have all the snap-fit hooks in place.
3. If the mirror has the heated feature, plug in the 2 electrical connectors to the back of the mirror back.
4. Align the mirror back snap-fit hooks with the adjuster mechanism ramps.
5. Gently press the mirror back into the adjuster mechanism with the palm of the hand on the center of the glass. Use the palm of the hand to rotate the glass about the glass pivot until the engagement of the snap-fit hooks.
6. Perform the following procedure in order to ensure that the mirror glass is fully installed:
   6.1. Place foam below the mirror assembly to catch the glass if it should fall.
   6.2. Hold the assembly so that the mirror glass is face down, while taking care that the mirror hosing is not scratched, slap the upward surface of the housing. The mirror glass should stay retained in the housing.
7. Observe the following conditions that indicate a successful installation:
   - The mirror back remains firmly attached to the motor pack.
   - Electrical/Manual action of the mirror is possible.

Outside Rearview Mirror Glass Replacement - Lower

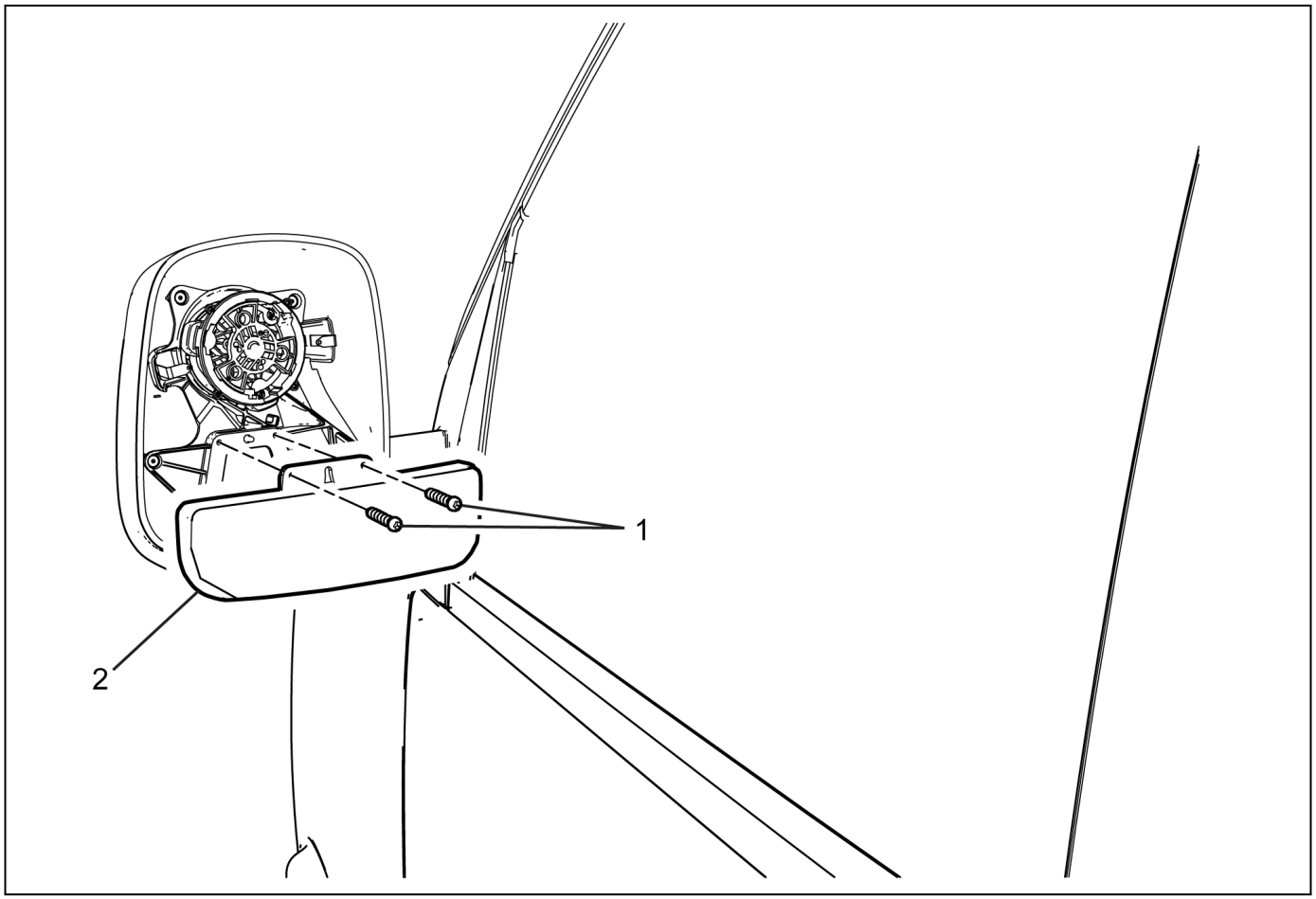

3654718

Outside Rearview Mirror Glass Replacement - Lower

Callout	Component Name
Preliminary Procedure Remove the outside rearview mirror upper glass. Refer to *Outside Rearview Mirror Glass Replacement - Upper 1-88*.	
1	Outside Rearview Mirror Lower Glass Screw (Qty: 2) **Caution:** Refer to [Link target (target-id 178169-) not found] . **Tighten** 2 newtonm (18 lb in)
2	Outside Rearview Mirror Lower Glass

Outside Rearview Mirror Glass Replacement - Lower

Single Use Fasteners and Components

- Outside Rearview Mirror Glass - Lower
- Outside Rearview Mirror Glass Screw
- Outside Rearview Mirror Glass Retention Spring
- Outside Rearview Mirror Glass Bracket

Removal Procedure

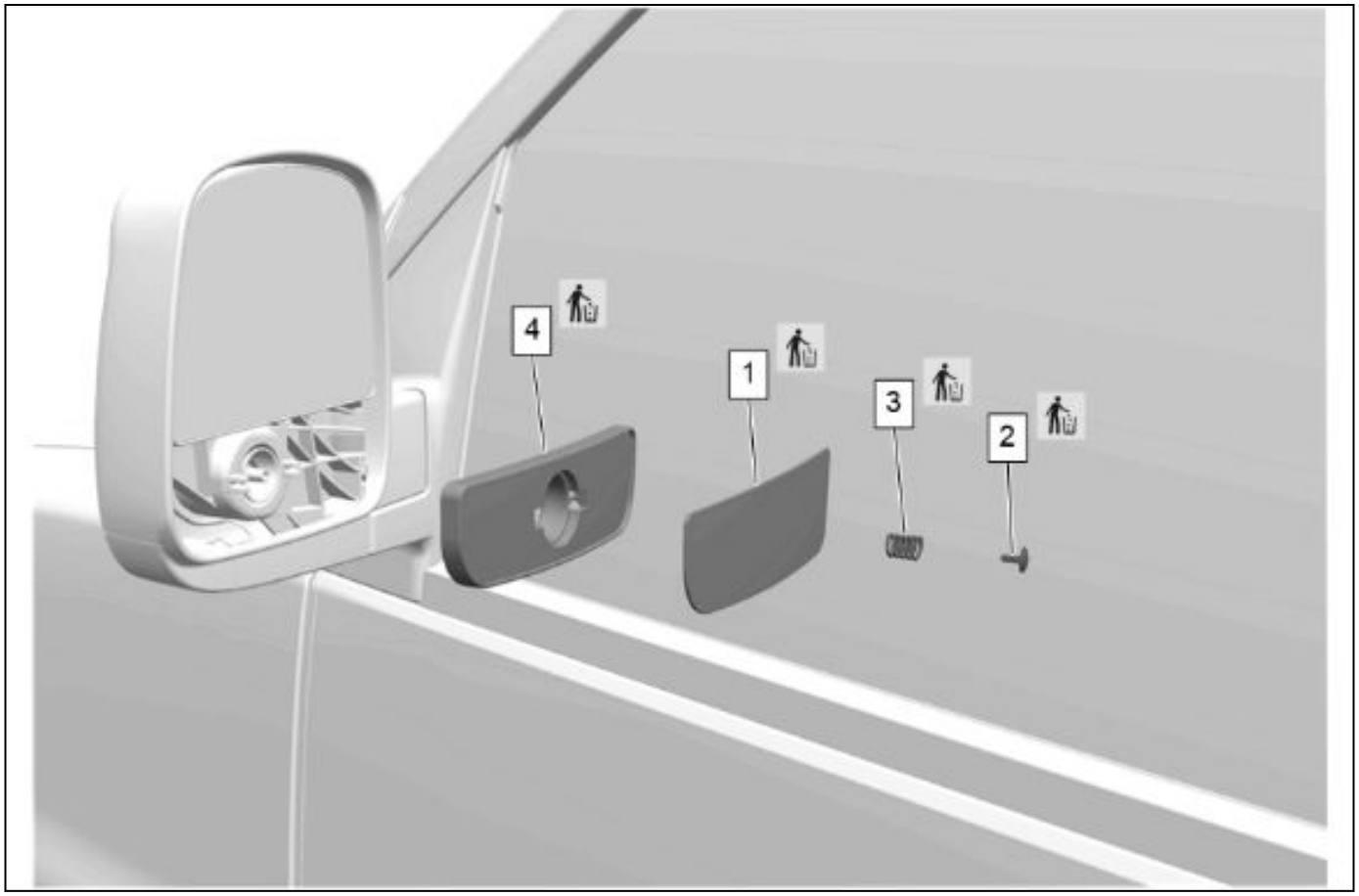

6446345

1. Apply masking tape over the outside rearview mirror glass – lower (1).
2. Using an appropriate tool, punch a hole in the center of the mirror glass to expose the fastener.
3. Outside Rearview Mirror Glass Screw (2) » Remove and DISCARD
4. Outside Rearview Mirror Glass Retention Spring (3) » Remove and DISCARD

Note: The outside rearview mirror glass and bracket will be removed as an assembly.

5. Outside Rearview Mirror Glass Bracket (4) » Remove and DISCARD

Installation Procedure

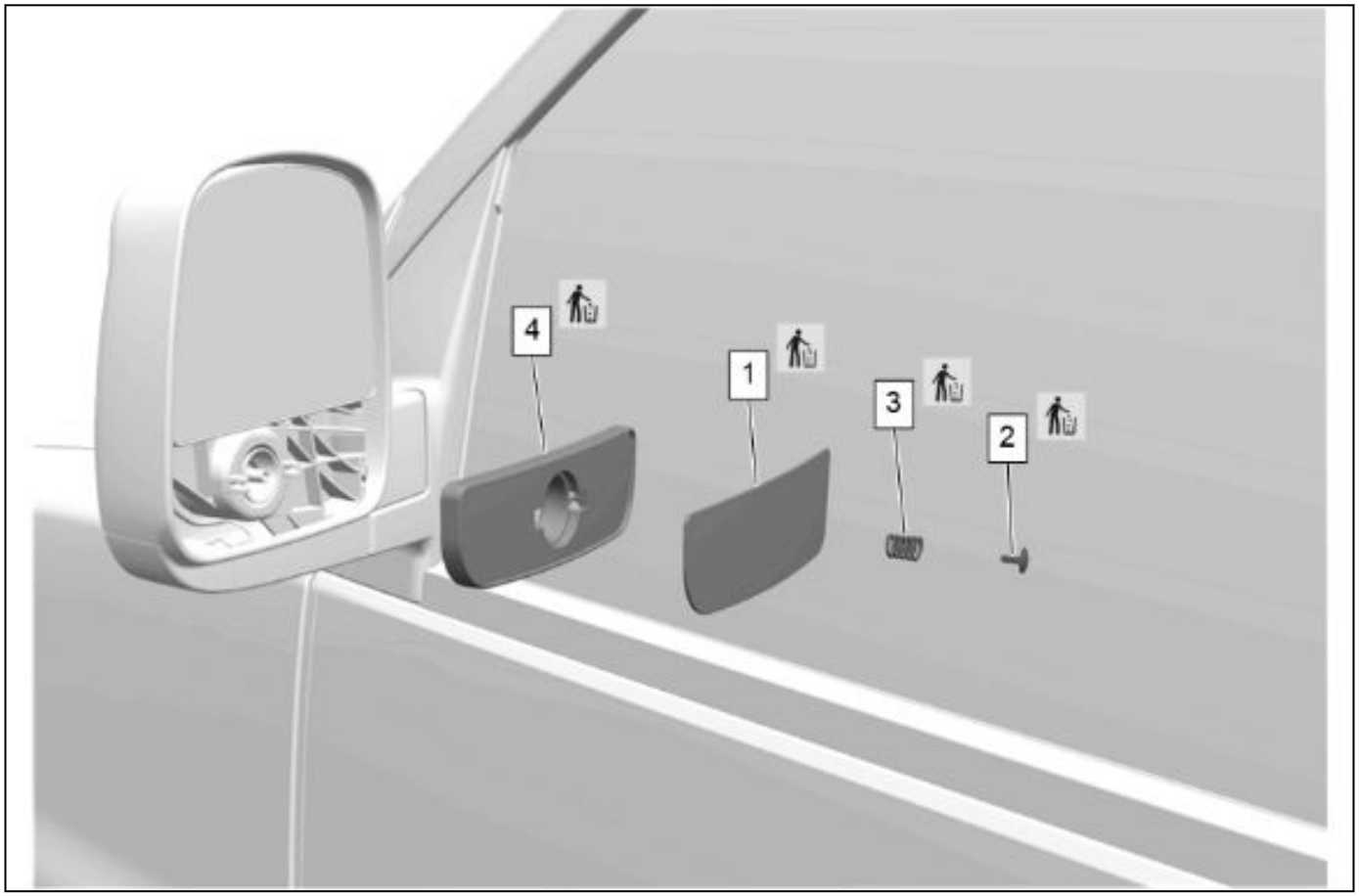

6446345

1. Outside Rearview Mirror Glass Bracket (4) » Install NEW
2. Outside Rearview Mirror Glass Retention Spring (3) » Install NEW

Caution: Refer to [Link target (target-id 178169-) not found] .

3. Outside Rearview Mirror Glass Screw (2) » Install NEW and tighten— **1.4** N•m **(12 lb in)**
4. Use a solution of 50/50 isopropyl alcohol and water to clean the adhesive surface.
5. Release the adhesive backing tape.
6. Outside Rearview Mirror Glass - Lower(1) » Install NEW

Outside Rearview Mirror Glass Replacement - Upper

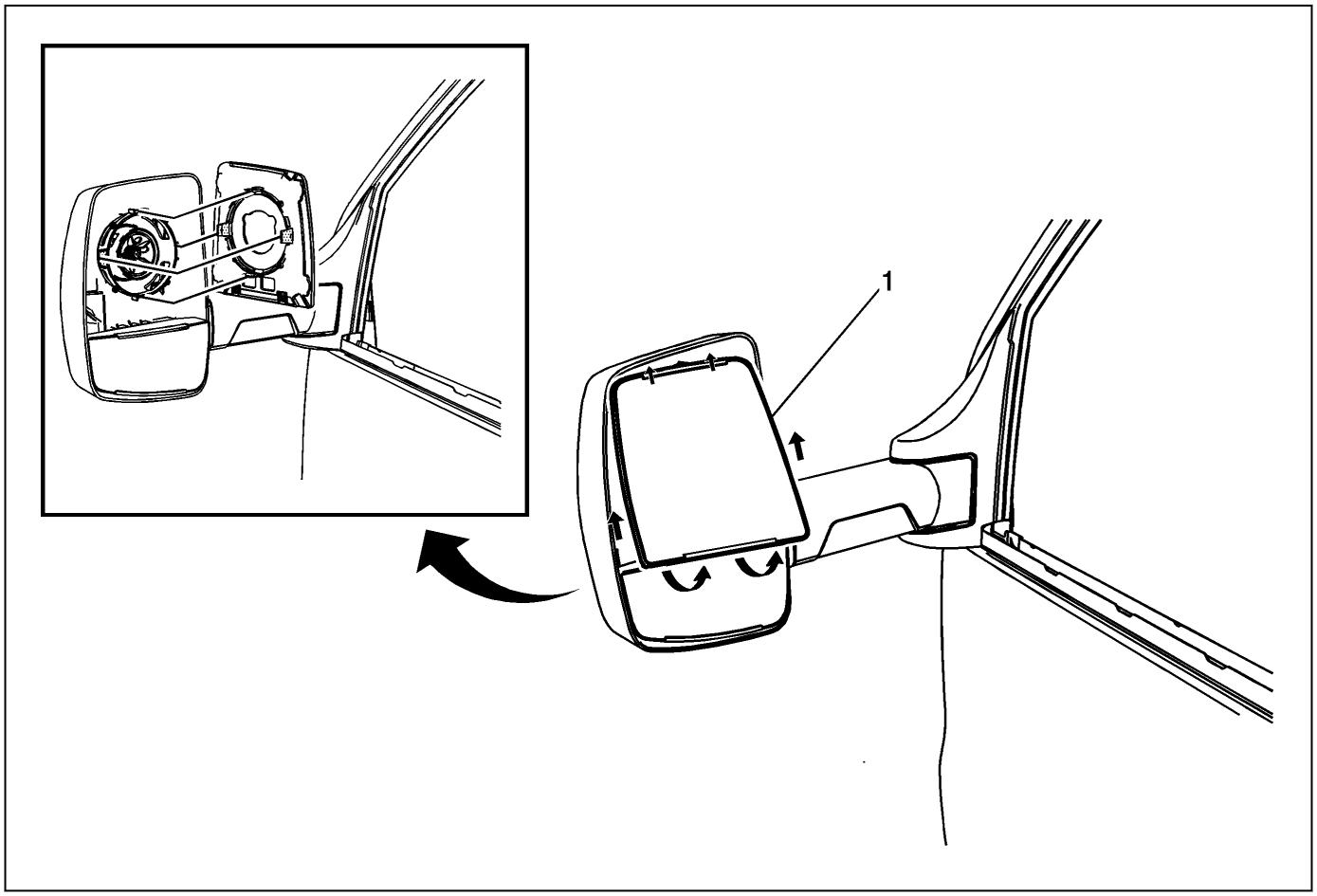

2332719

Outside Rearview Mirror Glass Replacement - Upper

Callout	Component Name
1	Outside Rearview Mirror Upper Glass ***Warning: Approved safety glasses and gloves should be worn when performing this procedure to reduce the chance of personal injury.*** **Procedure** 1. Place masking tape over the mirror glass. 2. Apply several layers of masking tape to the top of the outside rearview mirror housing in order to protect the painted finish. 3. Push the mirror glass inward at the top of the face until full travel is reached. 4. Retain pressure on the bottom of the mirror face. 5. Pull outward until the mirror face is released. 6. Disconnect the electrical connectors, if equipped

Camper Type Rearview Mirror Replacement

Removal Procedure

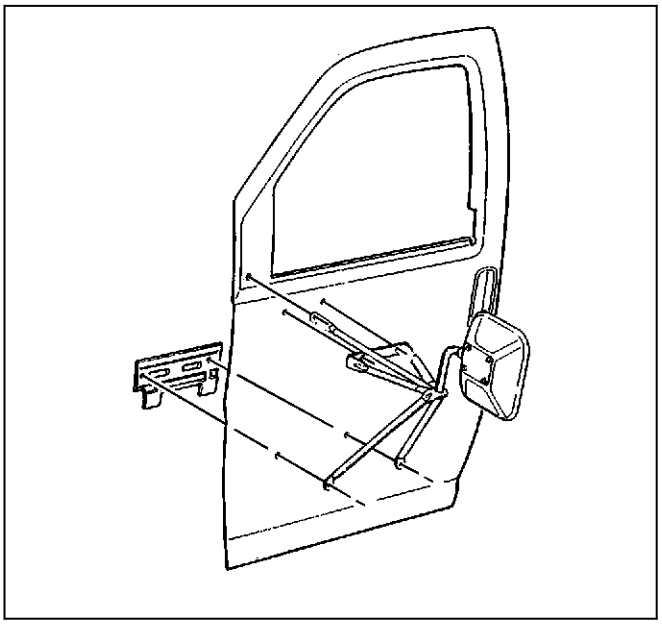

334018

1. Remove the outside rearview camper mirror head from the vehicle.
2. Remove the nuts that retain the outside rearview camper mirror braces to the door.
3. Remove the outside rearview camper mirror braces from the vehicle.

Installation Procedure

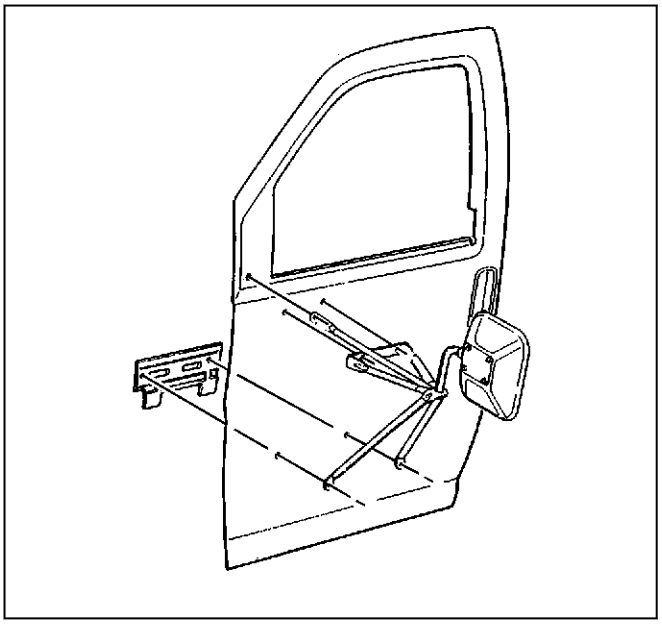

334018

1. Install the outside rearview camper mirror braces to the vehicle.
2. Align the holes in the outside rearview camper mirror braces with the studs on the door.
3. Install the nuts that retain the outside rearview camper mirror braces to the door.

   Do not tighten the nuts.

Caution: Refer to [Link target (target-id 178169-) not found] .

4. Install the outside rearview camper mirror head to the vehicle and tighten to **4 newtonm (35 lb in)**.

Commercial Rearview Mirror Replacement

Removal Procedure

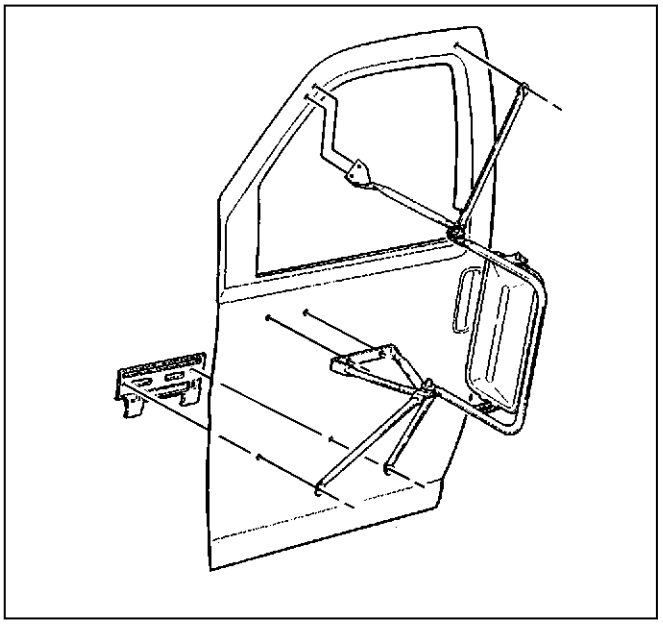

334015

1. Remove the commercial outside rearview mirror head from the vehicle.
2. Remove the nuts that retain the commercial outside rearview mirror braces to the door.
3. Remove the commercial outside rearview mirror braces from the vehicle.

Installation Procedure

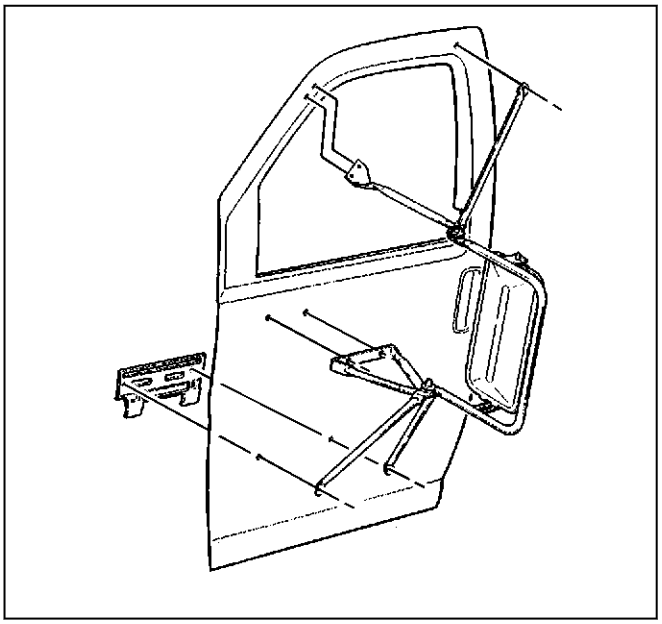

334015

1. Install the commercial outside rearview mirror braces to the vehicle.
2. Align the holes in the commercial outside rearview mirror braces with the studs on the door.
3. Install the nuts that retain the commercial outside rearview mirror braces to the door.

   Do not tighten the nuts.

Caution: Refer to [Link target (target-id 178169-) not found] .

4. Install the commercial outside rearview mirror head to the vehicle. Tighten the retaining nuts to **4 newtonm (35 lb in)**.
5. Perform the following procedure when the mirror installation is complete:
   - 5.1. Position the mirror support arm approximately 90 degrees to the door panel.
   - 5.2. Torque the following pivot nuts:
     - 5.2.1. The upper brace
     - 5.2.2. The lower brace
     - 5.2.3. The mirror support arm

       Tighten the pivot nuts to **12 newtonm (106 lb in)**.

Inside Rearview Mirror Replacement

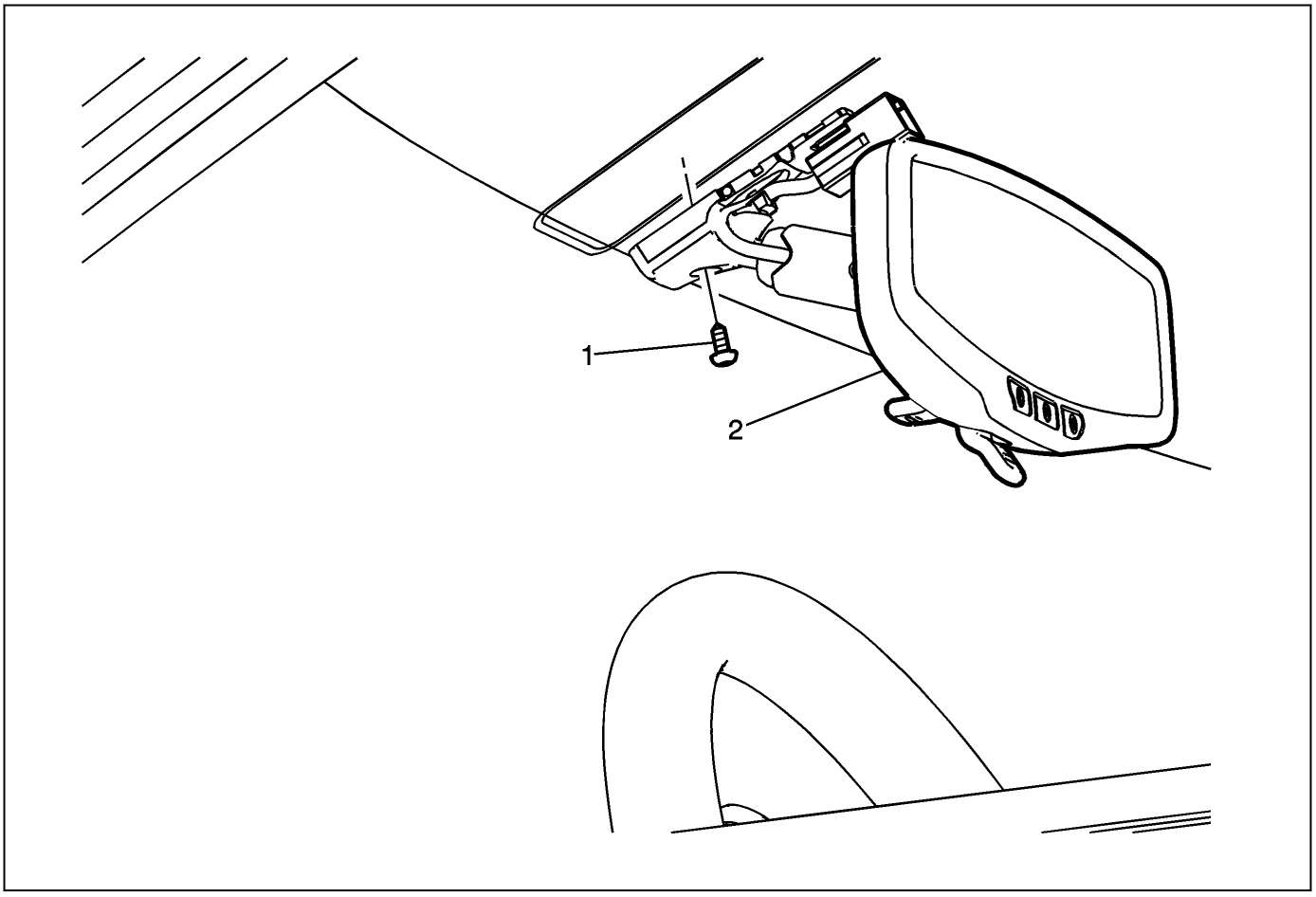

3228847

Inside Rearview Mirror Replacement

Callout	Component Name
1	Inside Rearview Mirror Screw **Caution:** Refer to [Link target (target-id 178169-) not found] . **Procedure** Remove the inside rearview mirror cover, if equipped. **Tighten** 2 N•m (18 lb in)
2	Inside Rearview Mirror **Procedure** 1. { If equipped } Disconnect the electrical connector. 2. Adjust the mirror to the full upward position. 3. Slide the mirror upward off of the rearview mirror button.

Trailering Systems

Schematic and Routing Diagrams

7085793

Trailering Systems Schematics (Trailer Connector/Provision (UY7 - NE7))

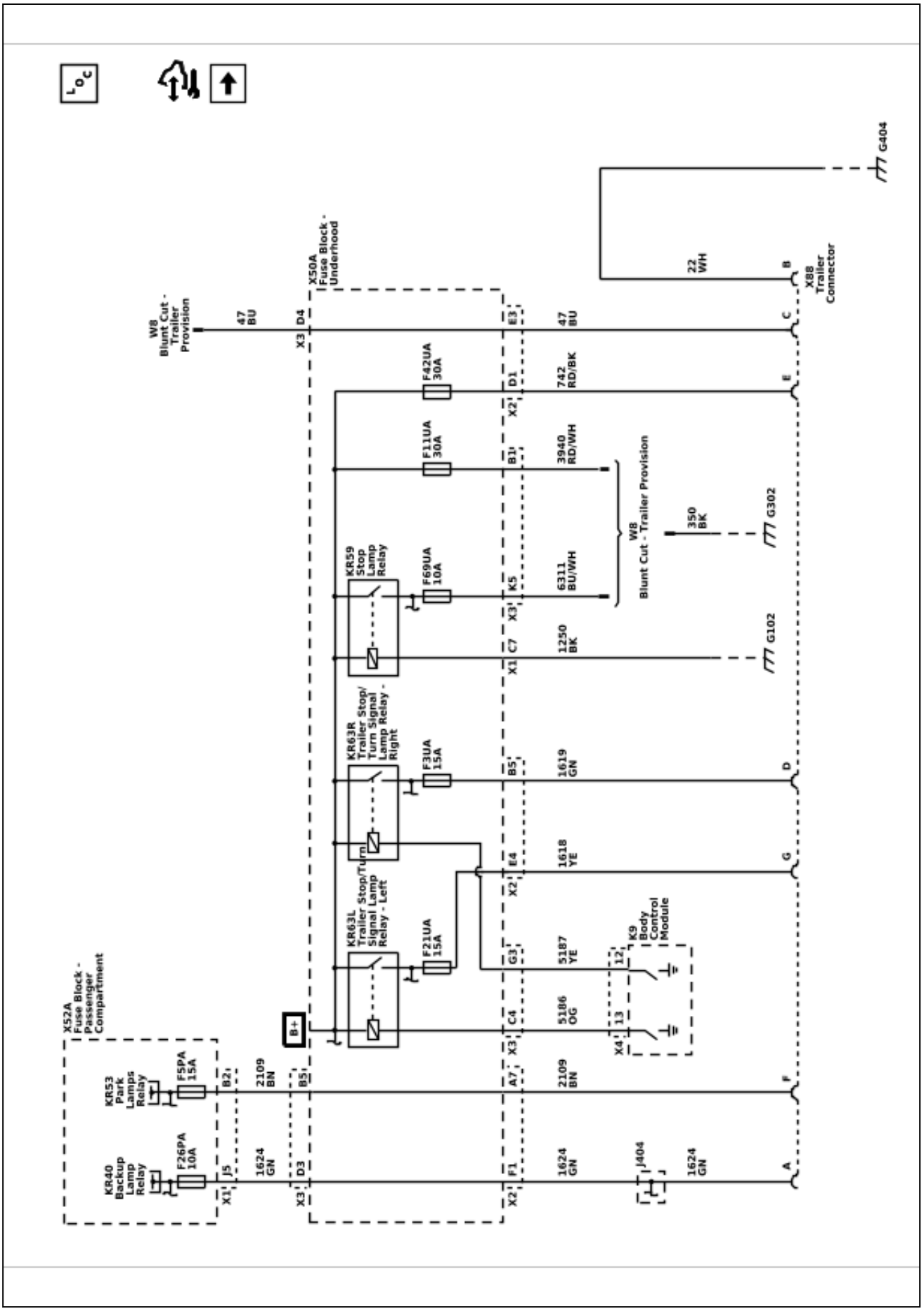

Trailering Systems Schematics (Trailer Connector/Provision (UY7 & NE7))

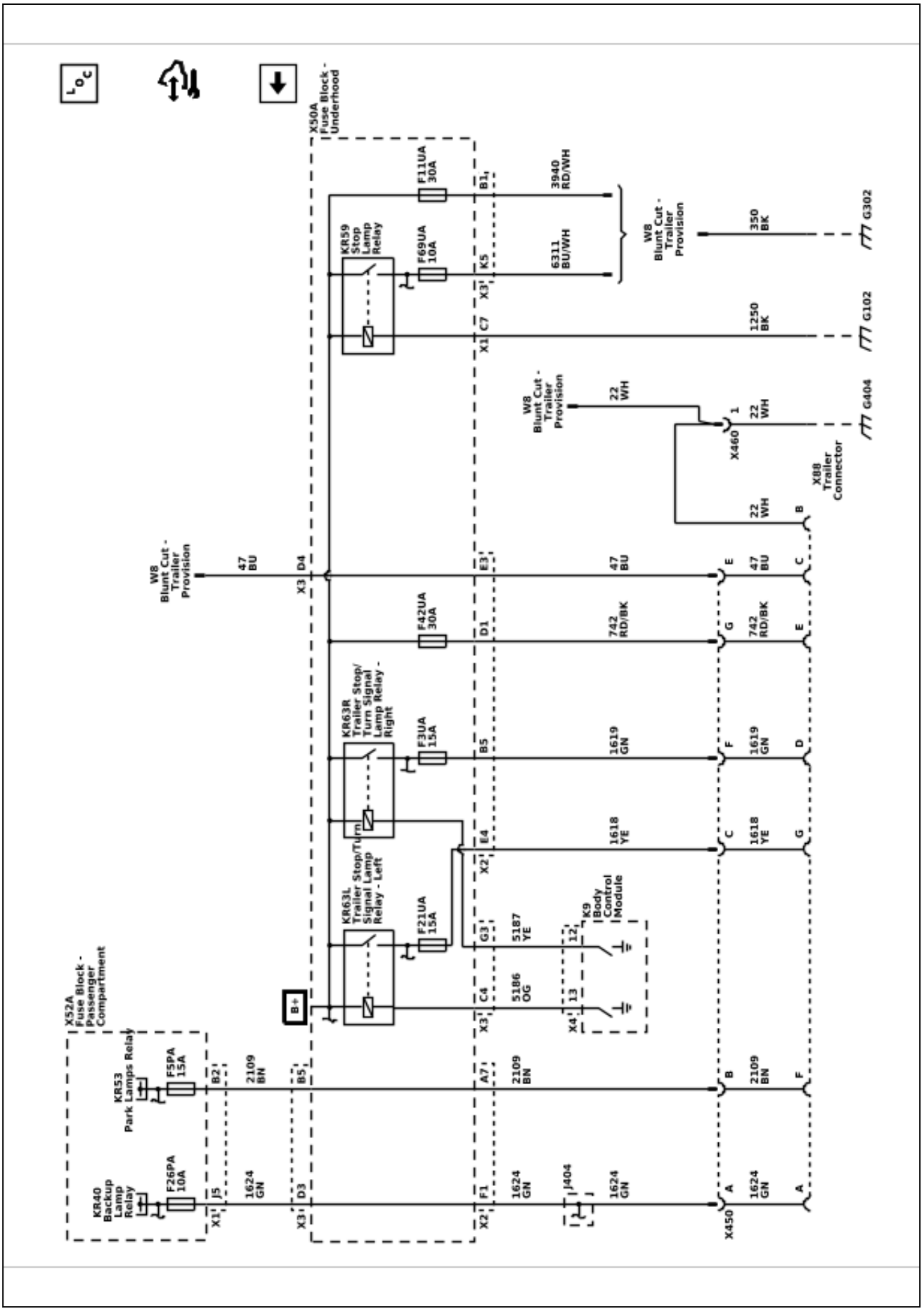

Vehicle Access

Specifications

Fastener Specifications

Single Use Non-Threaded Fasteners/Components

Note: All fasteners/components listed in this table MUST BE DISCARDED and replaced with NEW after removal.
Application
Rivet

Reusable Threaded Fastener Tightening Specifications

Note: All fasteners listed in this table can be reused after removal.	
Application	**Specification**
	Metric (English)
Door Lock Striker Bolt	10 newtonm (89 lb in)
Door Outside Handle Nut	11 newtonm (97 lb in)
Front Side Door Latch Bolt	10 newtonm (89 lb in)
Front Side Door Lock Striker Bolt	10 newtonm (89 lb in)
Intermediate Side Door Lock Nut	10 newtonm (89 lb in)
Intermediate Side Door Lock Screw	10 newtonm (89 lb in)
Rear Door Latch Bolt	25 newtonm (18 lb ft)
Rear Door Lock Screw	10 newtonm (89 lb in)
Rear Door Lower Striker Bolt	10 newtonm (89 lb in)
Rear Door Upper Striker Bolt	10 newtonm (89 lb in)
Rear Side Door Latch Bolt	10 newtonm (89 lb in)
Rear Side Door Latch Control Nut	11 newtonm (97 lb in)
Rear Side Door Lower Latch Striker Bolt	10 newtonm (89 lb in)
Rear Side Door Upper Latch Bolt	25 newtonm (18 lb ft)
Rear Side Door Upper Latch Striker Bolt	10 newtonm (89 lb in)
Side Rear Door Lower Door Latch Bolt	11 newtonm (97 lb in)
Side Rear Door Upper Latch Bolt	25 newtonm (18 lb ft)
Sliding Door Outside Handle Nut	11 newtonm (97 lb in)
Sliding Door Rear Lock Bolt	10 newtonm (89 lb in)
Sliding Side Door Control Bolt	10 newtonm (89 lb in)
Strut Ball Stud Bracket Bolt	20 newtonm (15 lb ft)

Adhesives, Fluids, Lubricants, and Sealers

Adhesives, Fluids, Lubricants, and Sealers

Application	Type of Material	GM Part Number	
		United States	**Canada**
Front Side Door Latch Bolt	Thread Locking Adhesive	19333511	10953489
Front Side Door Outside Handle	Thread Locking Adhesive	19333511	10953489
Rear Door Lock Screw	Thread Locking Adhesive	19333511	10953489
Screw	Thread Locking Adhesive	19333511	10953489

Schematic and Routing Diagrams

Door Lock/Indicator Schematics (Lock/Unlock Control (AU3))

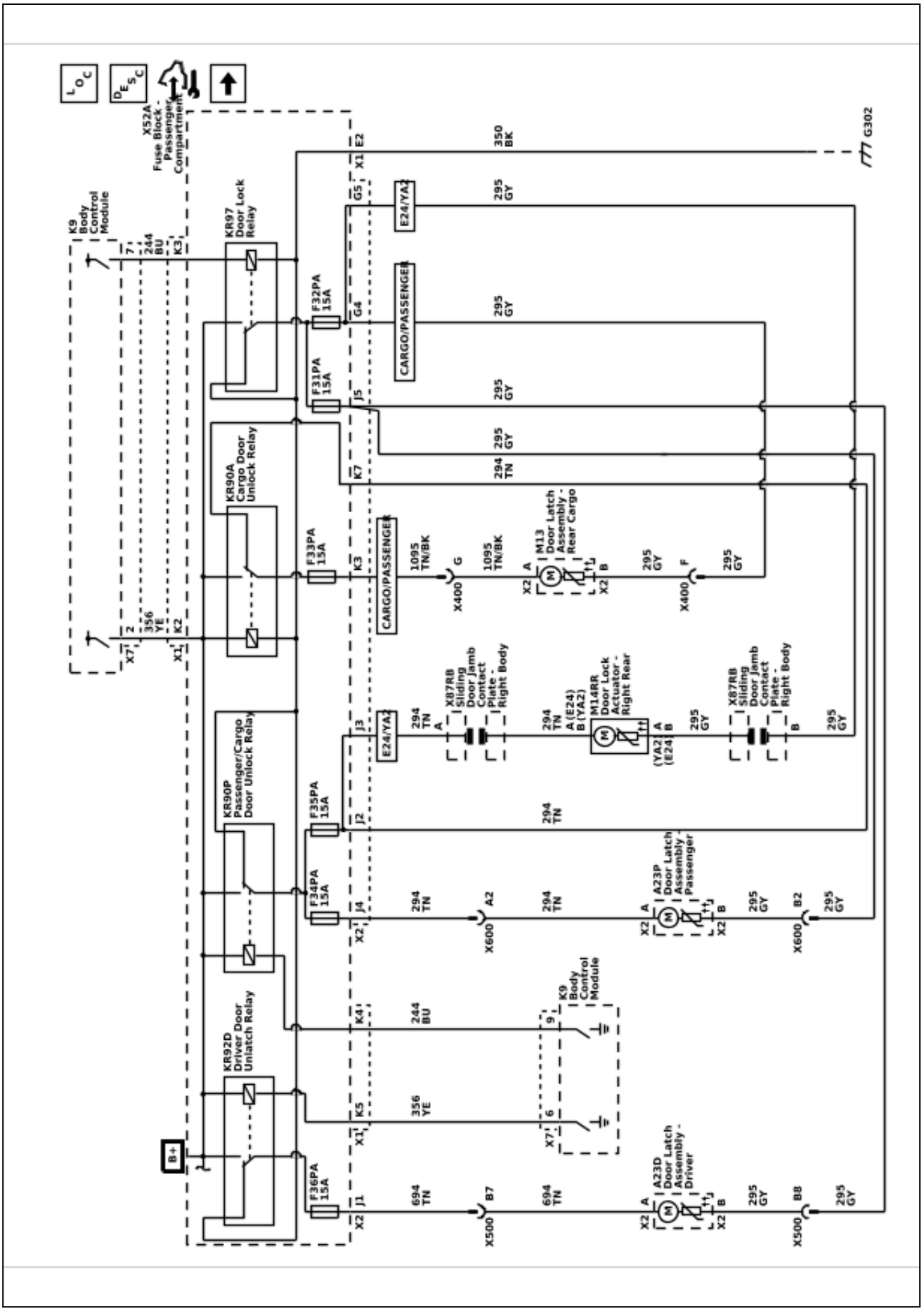

Door Lock/Indicator Schematics (Door Lock Switches (AU3))

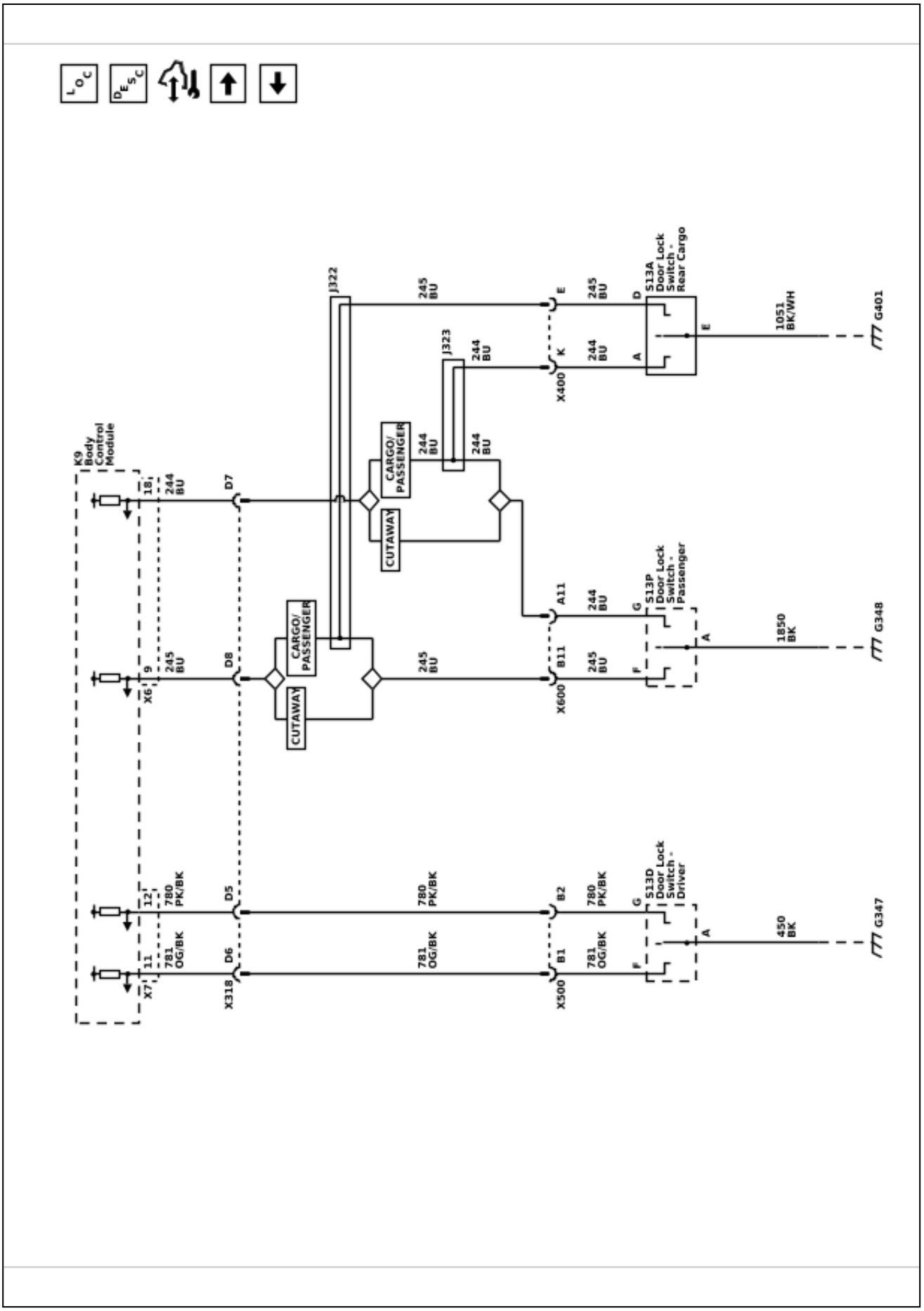

Door Lock/Indicator Schematics (Door Ajar Switches)

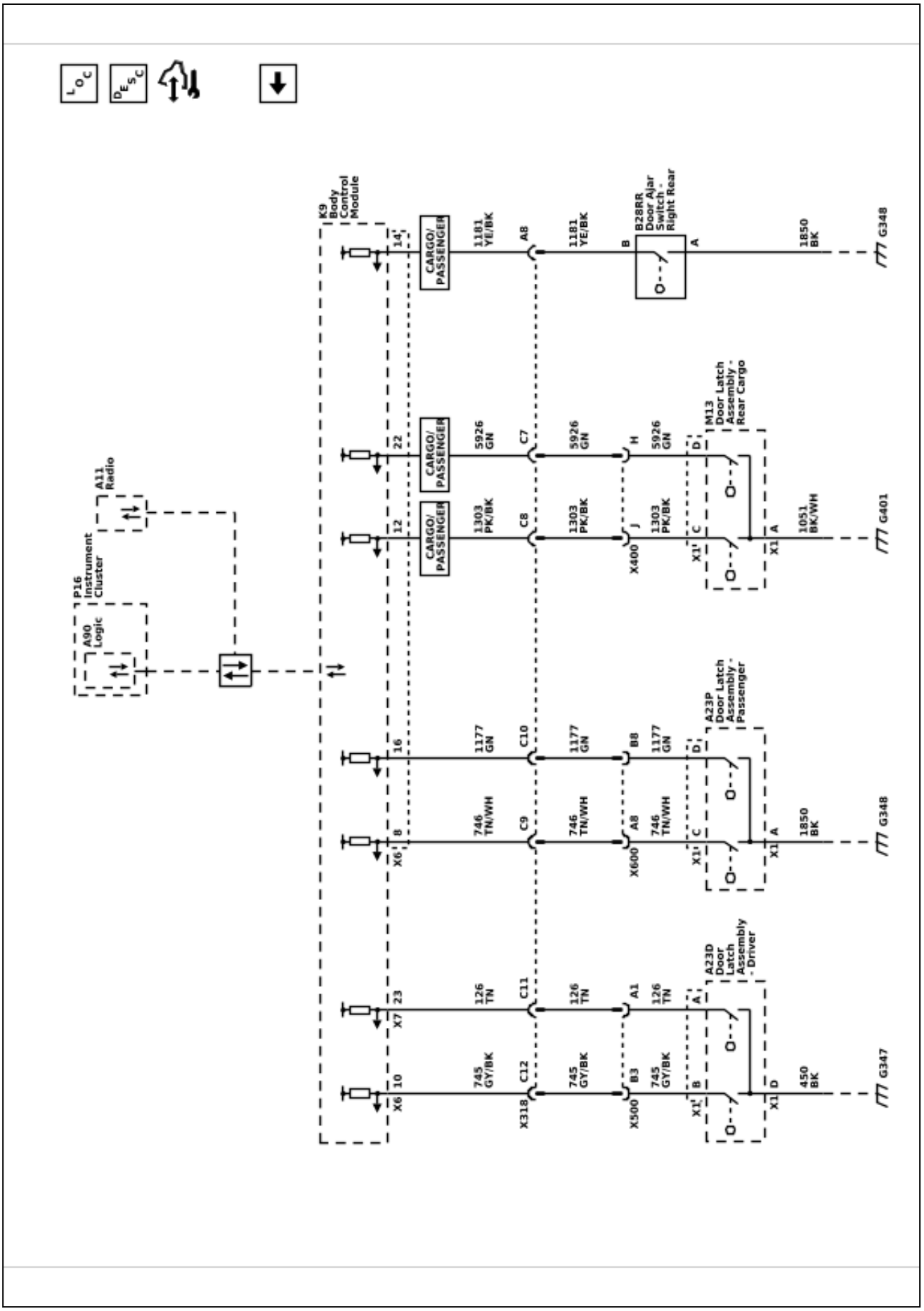

7085656

Hood Latch Schematics (Hood Latch)

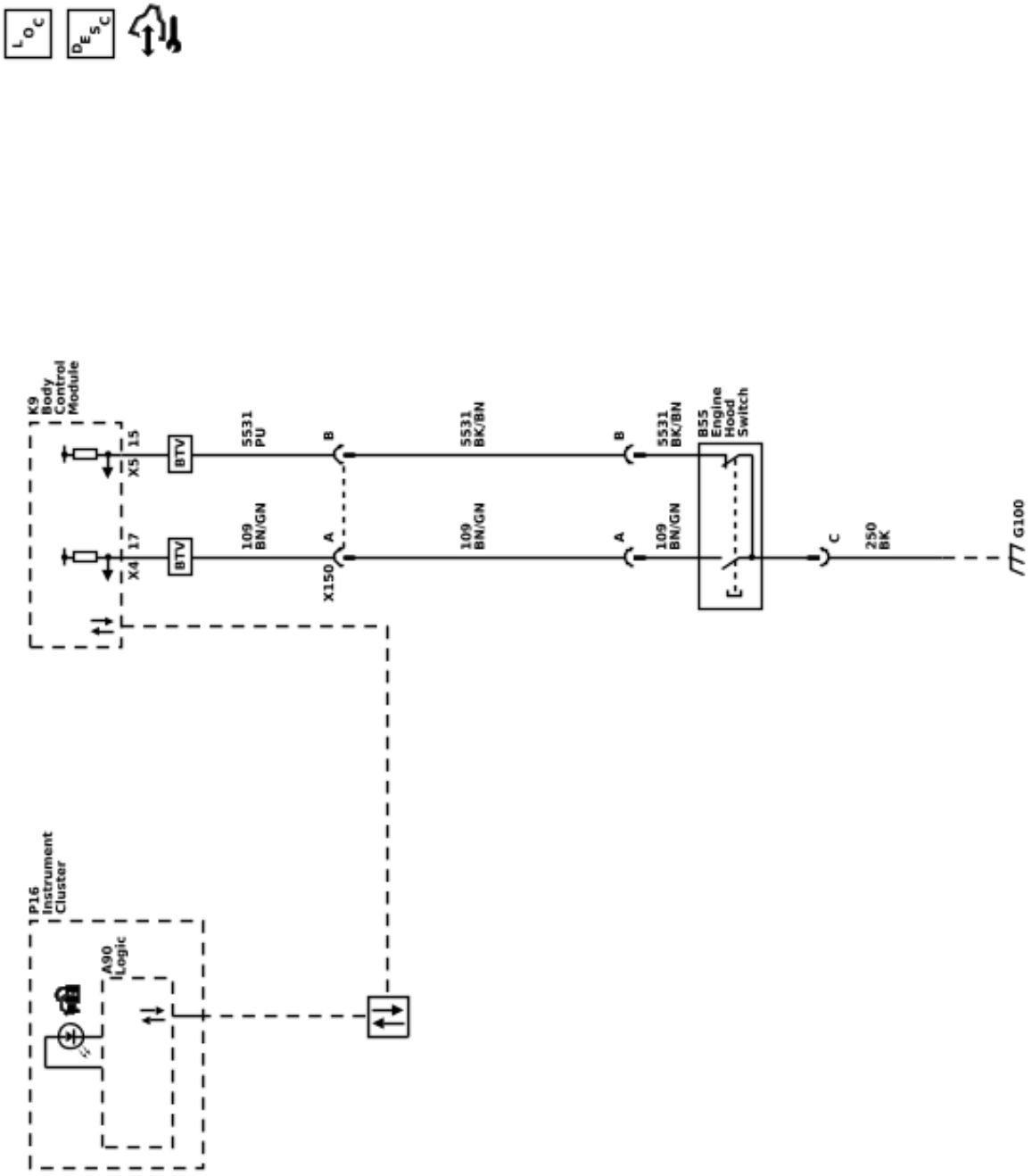

Diagnostic Information and Procedures

Door Will Not Open/Close, Door Binding, or Locks, Handles, or Cylinders Do Not Function

Door Will Not Open/Close, Door Binding, or Locks, Handles, or Cylinders Do Not Function

Step	Action	Yes	No
DEFINITION: This diagnostic table is designed to address the mechanical diagnosis of the door latching system, which could include the inside and outside handles, latch rods/cables, latches, or latch cylinders.			
1	Did you perform the Diagnostic System Check – Vehicle?	Go to *Step 2*	Go to [Link target (target-id 72794-) not found]
2	Were you sent here from a Vehicle Access Symptom Table?	Go to *Step 3*	Go to [Link target (target-id 72796-) not found]
3	Does the door open with both handles?	Go to *Step 4*	Go to *Step 12*
4	Does the door open with the outside handle?	Go to *Step 5*	Go to *Step 13*
5	Does the door open with the inside handle?	Go to *Step 6*	Go to *Step 14*
6	Does the door close and latch properly?	Go to *Step 7*	Go to *Step 15*
7	Does the manual lock knob lock and unlock the latch smoothly without binding?	Go to *Step 8*	Go to *Step 16*
8	Does the door lock switch and/or the keyless entry transmitter lock and unlock the door latch or door latches?	Go to *Step 9*	Go to *Step 18*
9	Is the outside key cylinder loose or does it rattle or fall out? (if equipped)	Go to *Step 19*	Go to *Step 10*
10	Does the outside key cylinder lock and unlock the latch and function smoothly without binding? (if equipped)	Go to *Step 11*	Go to *Step 20*
11	Does the door bind, does it take excessive effort to open, or is it misaligned?	Go to *Step 21*	Go to *Step 22*
12	Does the Rear Door open?	Go to *Step 21*	Go to *Step 22*
12	Door will not open with both handles: • Unlock the door and disengage the rear child security lock, if equipped. • Aggressively snap outside door handle multiple times (release the handle from the full travel position as quickly as possible). • Rapidly unlock the door from the key fob or the inside unlock switch multiple times. After the last unlock cycle, pull both handles. • With the door still unlocked, press inboard on both the inside and outside handles. Ensure not to damage the outer panel or trim panel. Then. cycle each handle to full travel to release. • If the door still does not open, pull outside handle to full stop. Cut the outside handle gasket from underneath outside door handle. With the gasket removed, press inboard on the outside door handle (ensure not to damage the outer panel). Then, cycle the outside door handle to full travel and release handle. • If the door still does not open, remove the door trim panel enough to gain access to the inside door handle cable. Completely remove inside door handle cable from inside door handle. This step will cause damage to the door trim panel. • If the door still does not open, remove the door trim panel enough to gain access to the side door latch. Reach inside the door and remove the outside cable from the door latch. Reach inside the door and lift up on the outside release lever of the side door latch. Did you find and correct the condition?	Go to *Step 21*	Go to *Step 18*

Step	Action	Yes	No
13	If the door will not open with the outside handle, or the handle is obstructed or loose, check the following: • For cold weather freezing, thaw as necessary. • Check the handle for foreign material. Remove material as necessary. • Check the handle grab bar for looseness or damage. Repair as necessary. • Check the handle for full travel. If the issue is not resolved, remove the trim panel as necessary to gain access to door hardware and check the following: • Check the handle chassis for loose fasteners, broken chassis inserts, or loose or missing spring. • Remove the door trim panel as necessary to check that outside door handle cable is properly attached at both door latch and outside handle. If the cable is pinched, kinked, or improperly installed, correct as necessary. Did you find and correct the condition?	Go to *Step 22*	Go to *Step 15*
14	If the door will not open with the inside handle: • Check the inside handle for foreign material. Remove material as necessary. • Check that the handle is secure. Correct as necessary. • If rear door, verify child security is not engaged. • Remove the trim panel as necessary to and check the inside handle rod/cable attachments at both the latch and handle. If the cable is kinked or pinched, correct as necessary. • Remove the door trim panel as necessary to check that inside door handle cable is properly attached at both door latch and inside door handle. If the cable is pinched, kinked, or improperly installed, correct as necessary. Did you find and correct the condition?	Go to *Step 22*	Go to *Step 16*
15	If the door does not close or latch properly or partially: 1. Check that the lock/unlock lever on the latch is in the open position to allow the door to close. • Apply pressure to the lock/unlock lever in the open position with a plastic trim tool while simultaneously pulling the outside door handle. 2. If the door does not properly close, remove the door trim panel as necessary and check the following components: • Check that the outside and inside door handles are properly attached at the door latch and both handles. If the cables are pinched, kinked, or improperly installed, correct as necessary. Both handle levers should always return to home position after handle actuation. • Verify the door striker is properly aligned. If not, adjust the door striker. Did you find and correct the condition?	Go to *Step 22*	Go to appropriate Door Latch Replacement procedure.
16	If the door will not unlock or is difficult to unlatch with the inside manual lock knob: • For cold weather freezing, thaw as necessary • Check the lock knob for a loose condition. Repair or replace as necessary. Check the lock knob for binding or dragging using the following procedure: 1. Remove the lock knob bezel to lock rod interference. If the condition does not go away, remove the door trim and cycle locks checking for drag/interference. Correct as required.	Go to *Step 22*	Go to *Step 17*

Step	Action	Yes	No
	2. If condition goes away, check for drag/interference of the lock knob against the inner belt seal, or the trim panel. Correct as required. 3. If further action is required, remove the trim panel and check the lock rod and lock knob for interference with the following: • Water deflector/paper • Side impact foam • Rod grommet in sheet metal • Glass run channel • Other rods or cables • Trim panel Did you find and correct the condition?		
17	For manual locks, if the latch will not function properly do the following: 1. With the door open, manually close the latch with a screwdriver. 2. Check the latch for internal binding by actuating the latch with the inside door handle lever. 3. Manually close the latch with a screwdriver again. 4. Check the latch for internal binding by actuating the latch with the outside door handle lever. Did you find and correct the condition?	Go to *Step 22*	Go to *Step 18*
18	For power locks, if the latch will not function properly from the keyless entry transmitter or switch, do the following: 1. For cold weather freezing, thaw as necessary. 2. Must return to Step 16 to check for system drag/bind before completing any electrical checks. 3. Remove trim pad as required and check the following: • Verify door harness is fully seated/connected at latch connector. • Assure wire harness connectors are seated and locked properly at latch and door switch. Remove and re-seat if required. • Check BCM for trouble codes. Correct/proceed accordingly. • Check for 12V at latch and door switch. Correct/proceed accordingly. • Check door harness for cuts/chafing/corrosion. Correct/replace as required. • Check harness connector pins for corrosion. 4. If power locks still do not function do the following: . Remove latch from door cavity. . Connect latch to electrical connector outside the door. . Function power lock/unlock switch. Watch for lock/unlock lever on latch to move completely from one position to the other. . If lever does not move, remove connector from old latch and attach to new latch outside of door cavity. . Verify new latch is functional, if so, attach rods and install new latch in door. Did you find and correct the condition?	Go to *Step 22*	Go to *Step 19*
19	If the key cylinder is loose do the following: • Remove the trim if necessary. • Check that the retaining clip is installed properly. (if equipped) • Check that the fastener is properly torqued. (if equipped) Did you find and correct the condition?	Go to *Step 22*	Go to *Step 20*

Step	Action	Yes	No
20	The outside key cylinder will not lock and unlock the latch and function smoothly without binding: 1. For cold weather freezing, thaw as necessary 2. Remove trim if required. 3. Check that the key cylinder rod is securely attached both to the key cylinder pawl and the latch. 4. Check that key cylinder lever, rod and latch lever are free of interferences. Remove interferences as required. 5. Check that latch cylinder rod is routed properly. Re-route as required. 6. Remove rod from latch cylinder and actuate cylinder. Check for internal resistance. Lubricate latch cylinder as required 7. Verify Cylinder rotates with vehicle key. If not, code and replace cylinder to match vehicle key. See latch cylinder coding and replacing. Did you find and correct the condition?	Go to *Step 22*	Go to *Step 21*
21	The door is difficult to open: • Check for interference with the fender, adjacent door, body opening or door striker and adjust as necessary. • Check for binding door hinges. Lubricate or align/adjust as necessary. • Check the door check link for binding. Lubricate as necessary. • Adjust the door as necessary. Did you find and correct the condition?	Go to *Step 22*	Go to appropriate Door Lock Striker Adjustment procedure.
	{ If equipped } Rear Door will not open: • To open the door, grab the spare tire and pull on the door while pressing the unlock button. • Once the door is open, inspect the rear door body side bumper (wedge) for scraping. • If scraping is found on the top or bottom of the wedge, slightly loosen the bolts that secure the wedge to the vehicle. • Push the close button and let the door auto close. The wedge will self align. • Open and close the door to ensure proper operation. • Rear Door Guide Wedge Bolt tighten — [2x] *Fastener Specifications 1-95*	Go to *Step 22*	Go to *Step 21*
22	Verify proper operation of the door closing system. • Outside handle • Inside handle • Manual lock/unlock − Outside key cylinder − Inside latch knob − Double pull handle • Power lock/unlock − Key fob − Door switches • Door opening/closing effort Is the condition still present?	Go to *Step 1*	System OK

Repair Instructions

Door Control Replacement

Removal Procedure

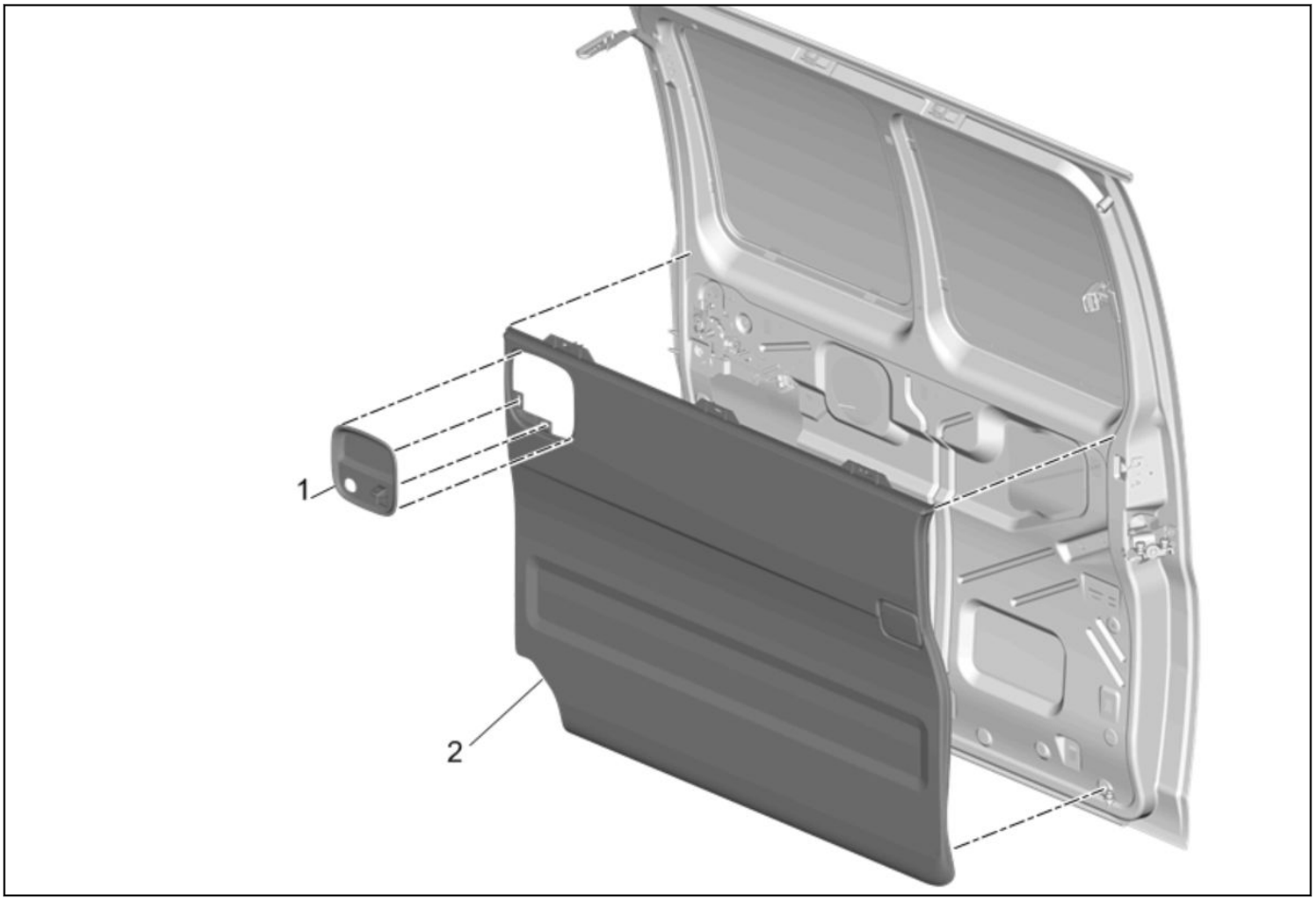

4866340

1. Sliding Rear Side Door Trim Panel(2) » Remove—[Link target (target-id 149956-) not found]

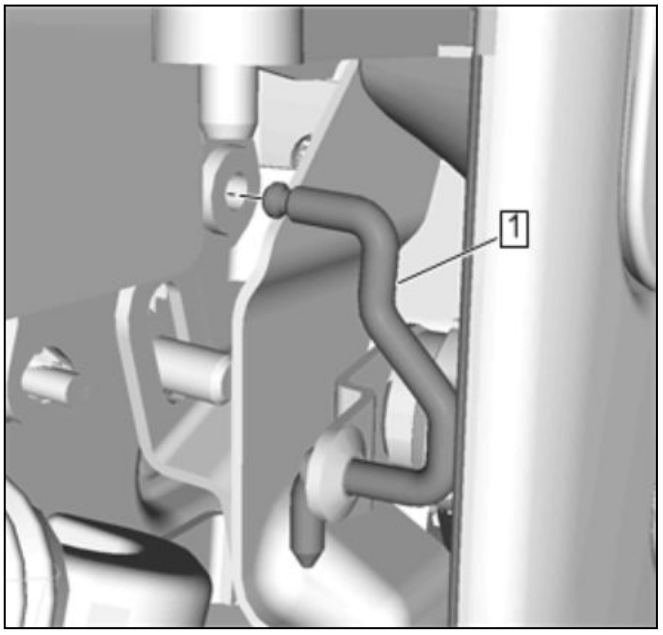

4867308

2. Rear Side Door Lock Cylinder Rod (1) » Remove

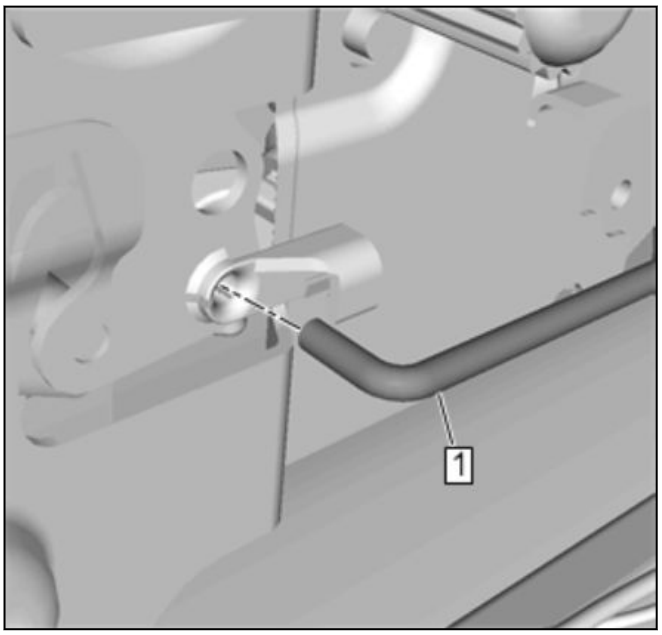

4867309

3. Rear Side Door Latch Rod (1) » Remove

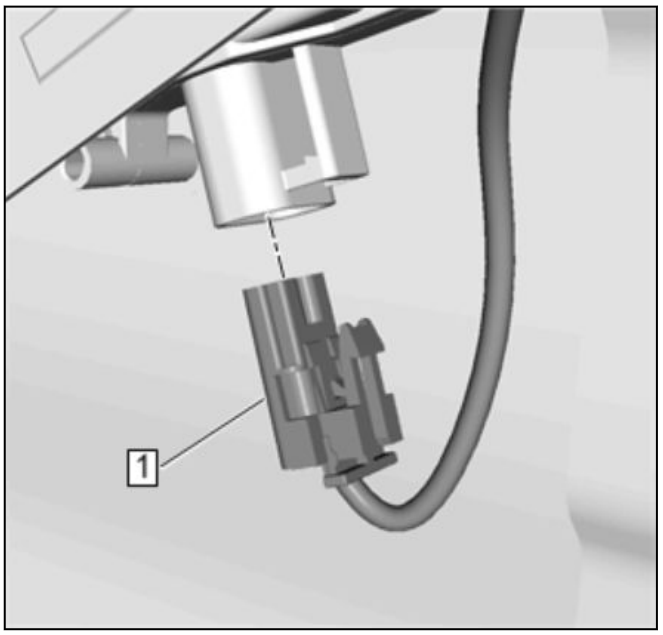

4867304

5. Disconnect the electrical connector. (1) » Remove

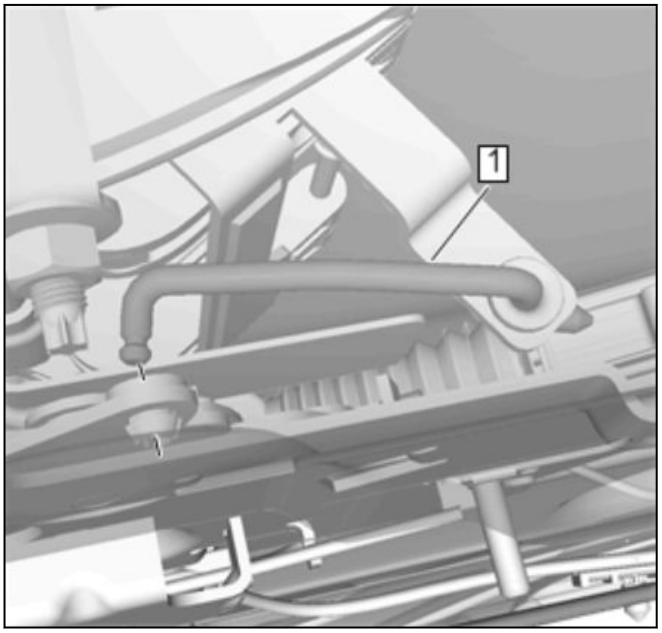

4867311

4. Rear Side Door Outside Handle Rod (1) » Remove

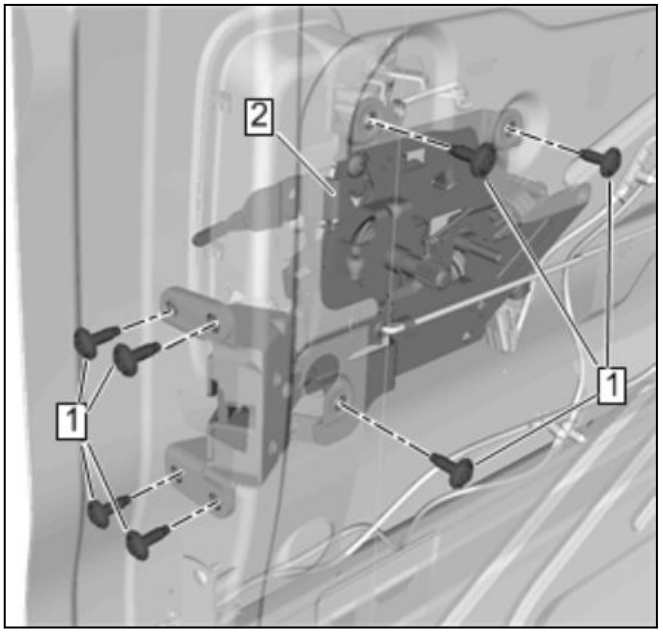

4867307

6. Rear Side Door Latch Bolt (1) » Remove[7x]
7. Door Control (2) » Remove

Installation Procedure

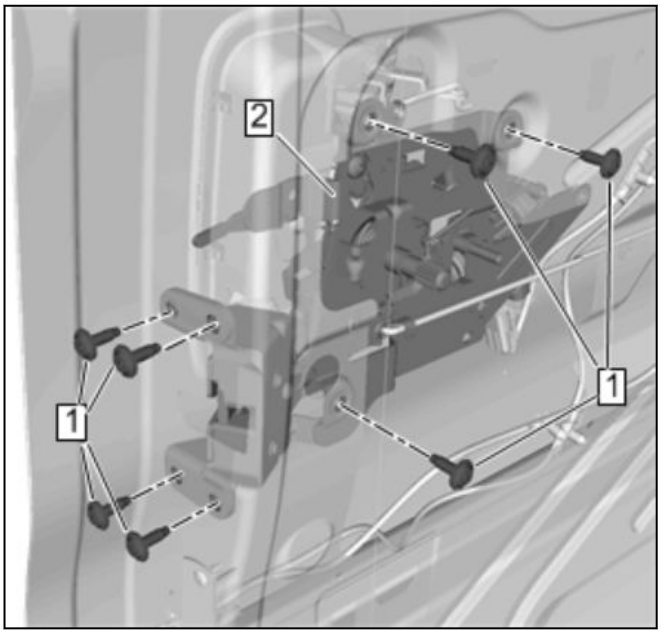

4867307

1. Door Control (2) » Install

Caution: Refer to [Link target (target-id 178169-) not found] .

2. Rear Side Door Latch Bolt (1) » Install and tighten[7x] **10 newtonm (88 lb in)**

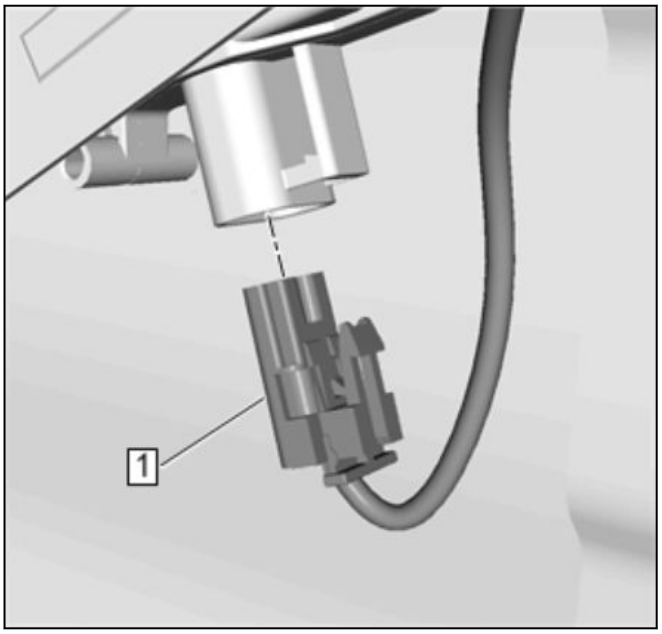

4867304

3. Connect the electrical connector. (1) » Install

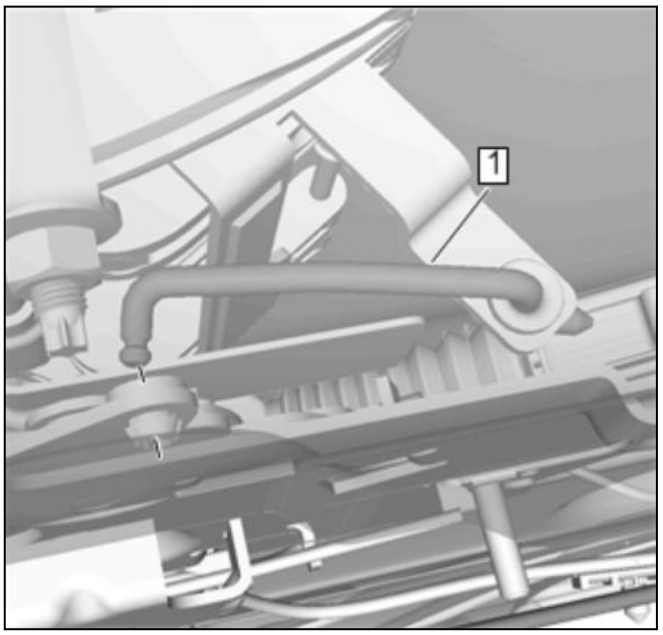

4867311

4. Rear Side Door Outside Handle Rod (1) » Install

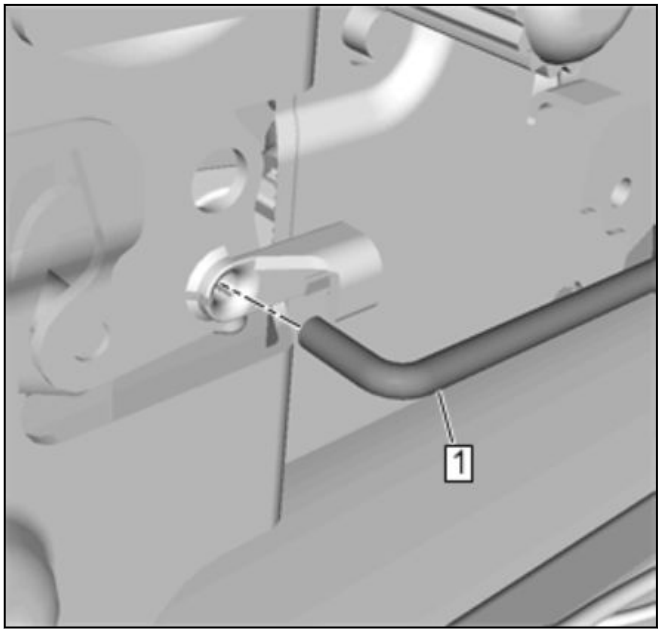

4867309

5. Rear Side Door Latch Rod (1) » Install

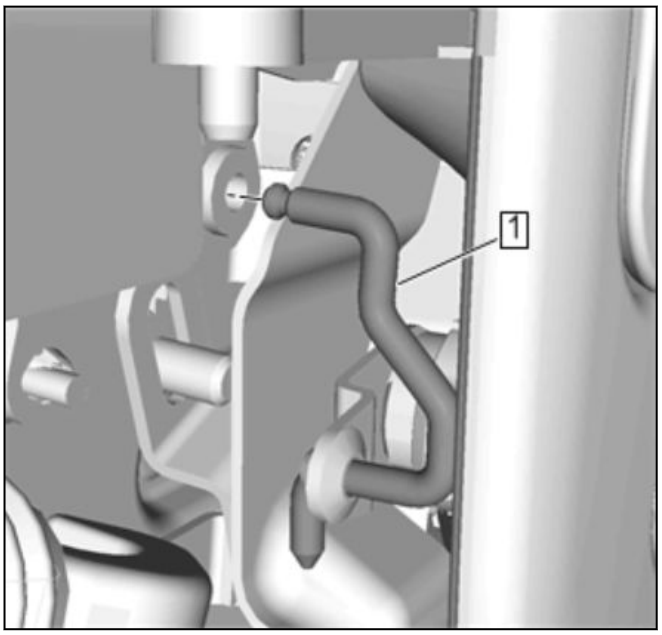

4867308

6. Rear Side Door Lock Cylinder Rod (1) » Install

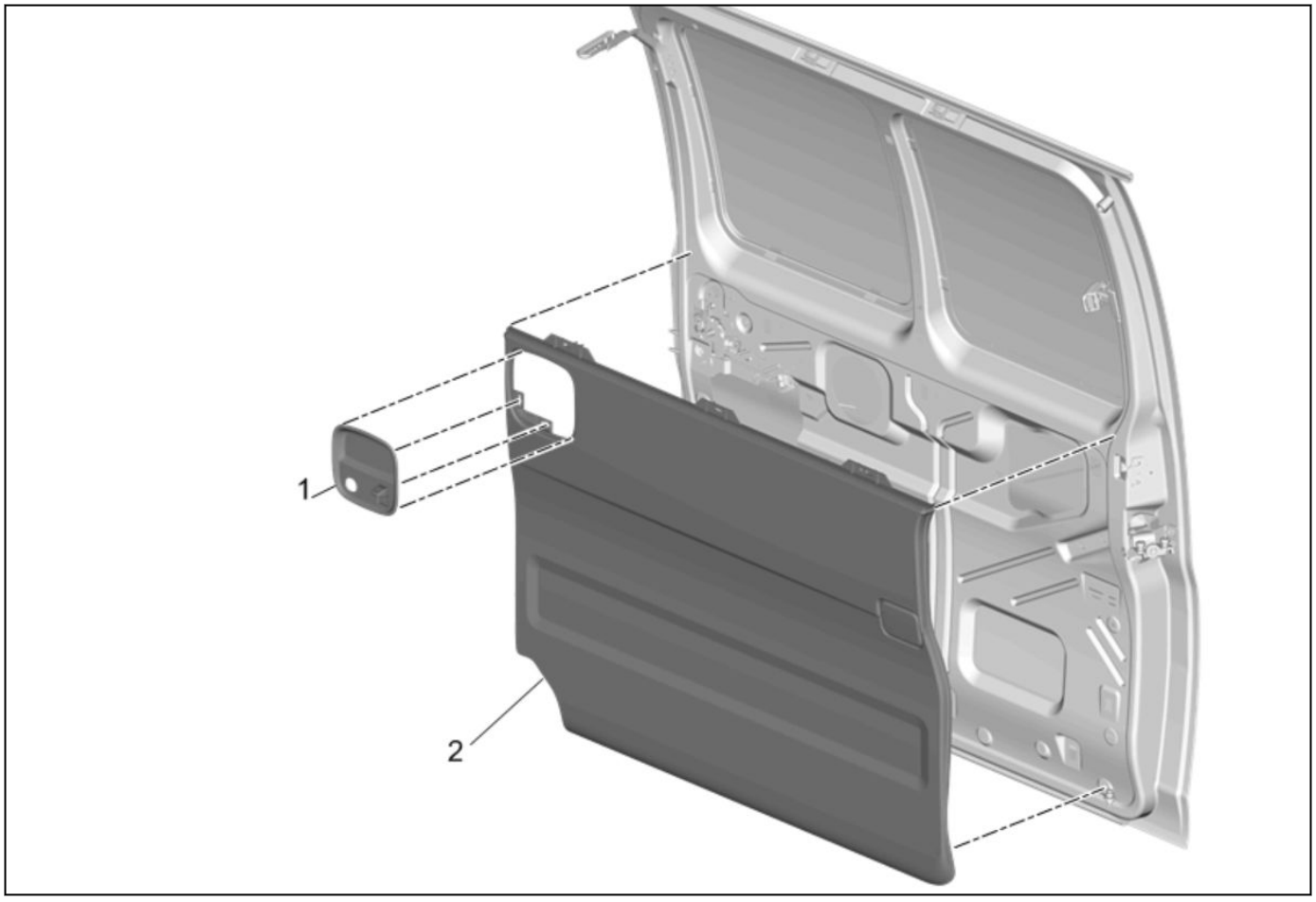

4866340

7. Sliding Rear Side Door Trim Panel(2) » Install—[Link target (target-id 149956-) not found]

Lock Cylinder Binding

Applying the proper lubrication may correct the following problems in many cases:

- Binding door lock cylinders

  Sticking door lock cylinders

- Keys that are hard to insert
- Keys that are hard to remove

The recommended material for lubricating these components are (in order of preference):

- Lubricant GM P/N 12345120, or the equivalent
- 5W 30 motor oil
- Silicone spray GM P/N 1052276, or the equivalent

Penetrating lubricants, such as GM P/N 1052949 and WD-40®, are not recommended because they wash out the original lubrication. These lubricants will eventually evaporate and leave little or no lubricating material. If you use these materials in order to unfreeze or loosen the lock cylinder components, refer to steps 2 through 4 for the proper method of lubrication.

You may repair lock cylinders that freeze due to cold weather by using the following procedure:

1. Apply heat to the lock cylinder with a heat gun. Be careful not to damage the painted surfaces.
2. Hold the lock cylinder shutter open with a paper clip (or similar item). Force air into the lock cylinder using compressed air and a blow gun attachment.
3. While holding the lock cylinder shutter open, inject a small amount of lubricant (refer to the recommendations) into the lock cylinder.
4. Work the key into the lock cylinder several times. Wipe any excess lubrication residue from the key.

Door Lock Cylinder Replacement

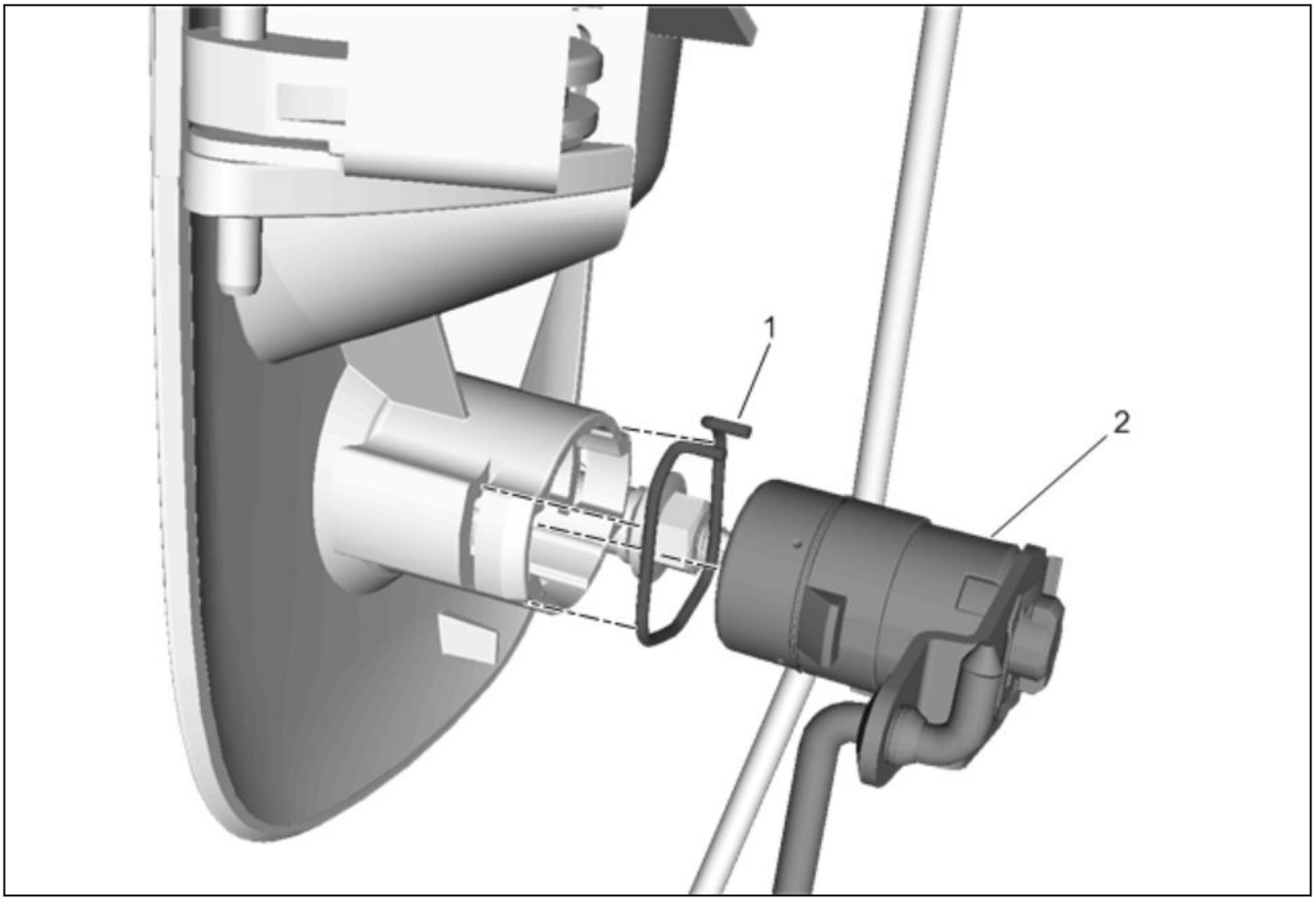

4849256

Door Lock Cylinder Replacement

Callout	Component Name
Preliminary Procedure *Door Outside Handle Replacement 1-119*	
1	Front Lock Cylinder Retainer
2	Front Side Door Lock Cylinder **Procedure** After installation, code the key and lock cylinder. [Link target (target-id 47833-) not found]

Rear Door Lock Cylinder Replacement

Removal Procedure

1. Remove the rear door outside handle and license pocket. [Link target (target-id 148290-) not found]

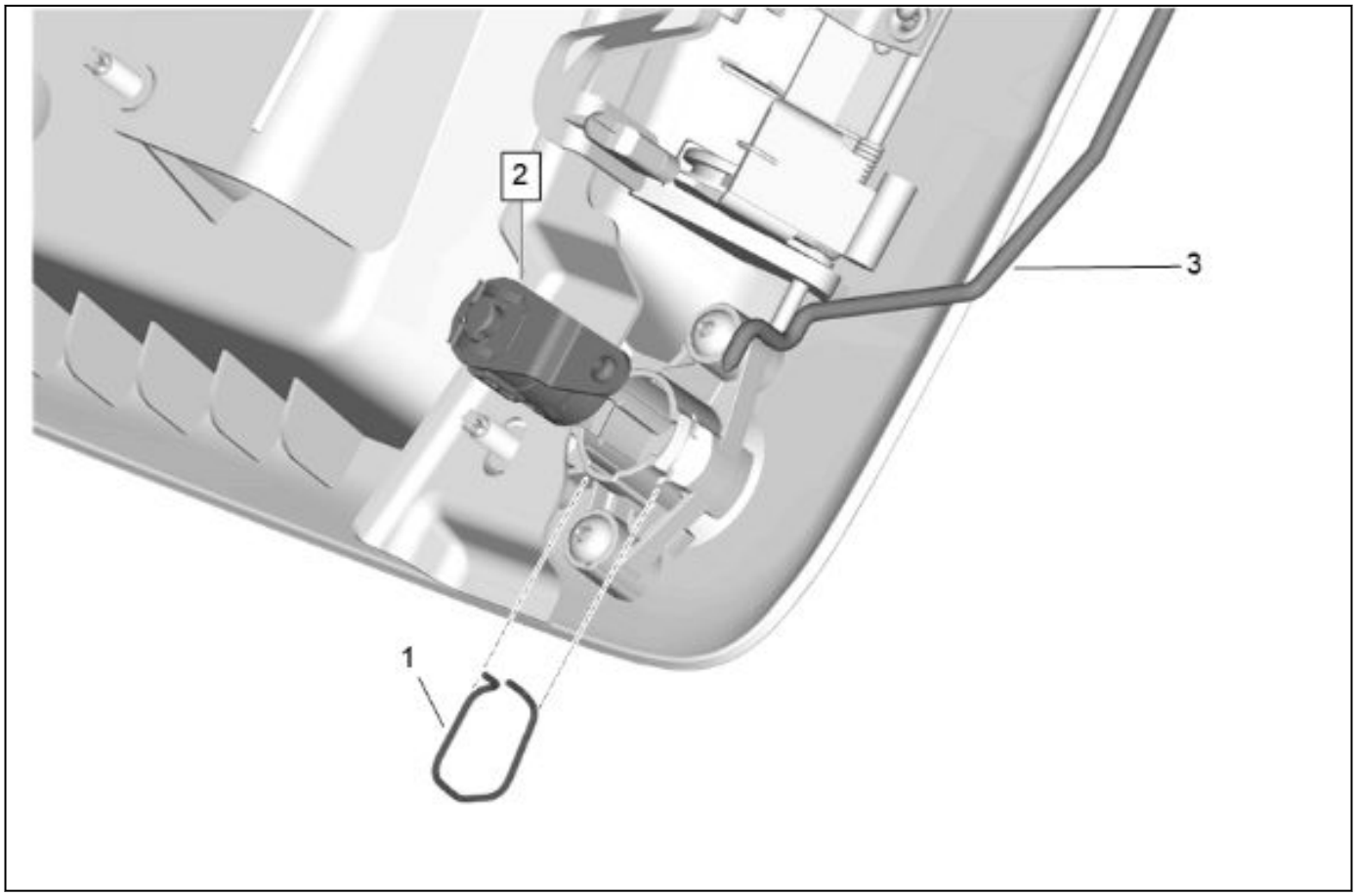

6380102

2. Remove the lock cylinder retainer (1).
3. Remove the rear door lock cylinder rod (3).
4. Remove the rear door lock cylinder (2).

Installation Procedure

1. Code the NEW rear door lock cylinder. [Link target (target-id 47833-) not found] .

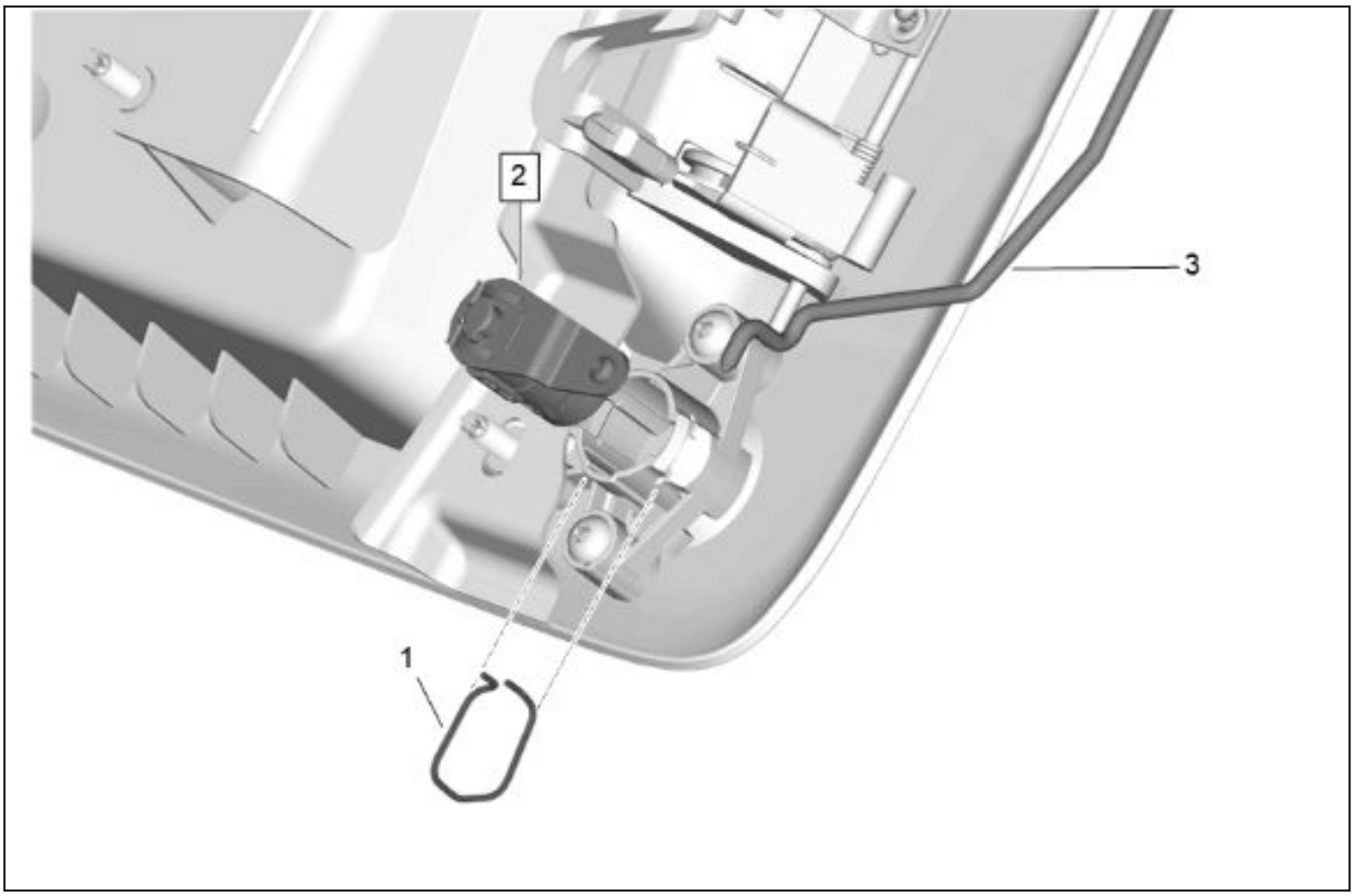

6380102

2. Install the rear door lock cylinder (2).
3. Install the rear door lock cylinder rod (3).
4. Install the lock cylinder retainer (1).
5. Install the rear door outside handle and license pocket. [Link target (target-id 148290-) not found]

Front Side Door Inside Handle Replacement

Single Use Fasteners and Components

Rivet

Removal Procedure

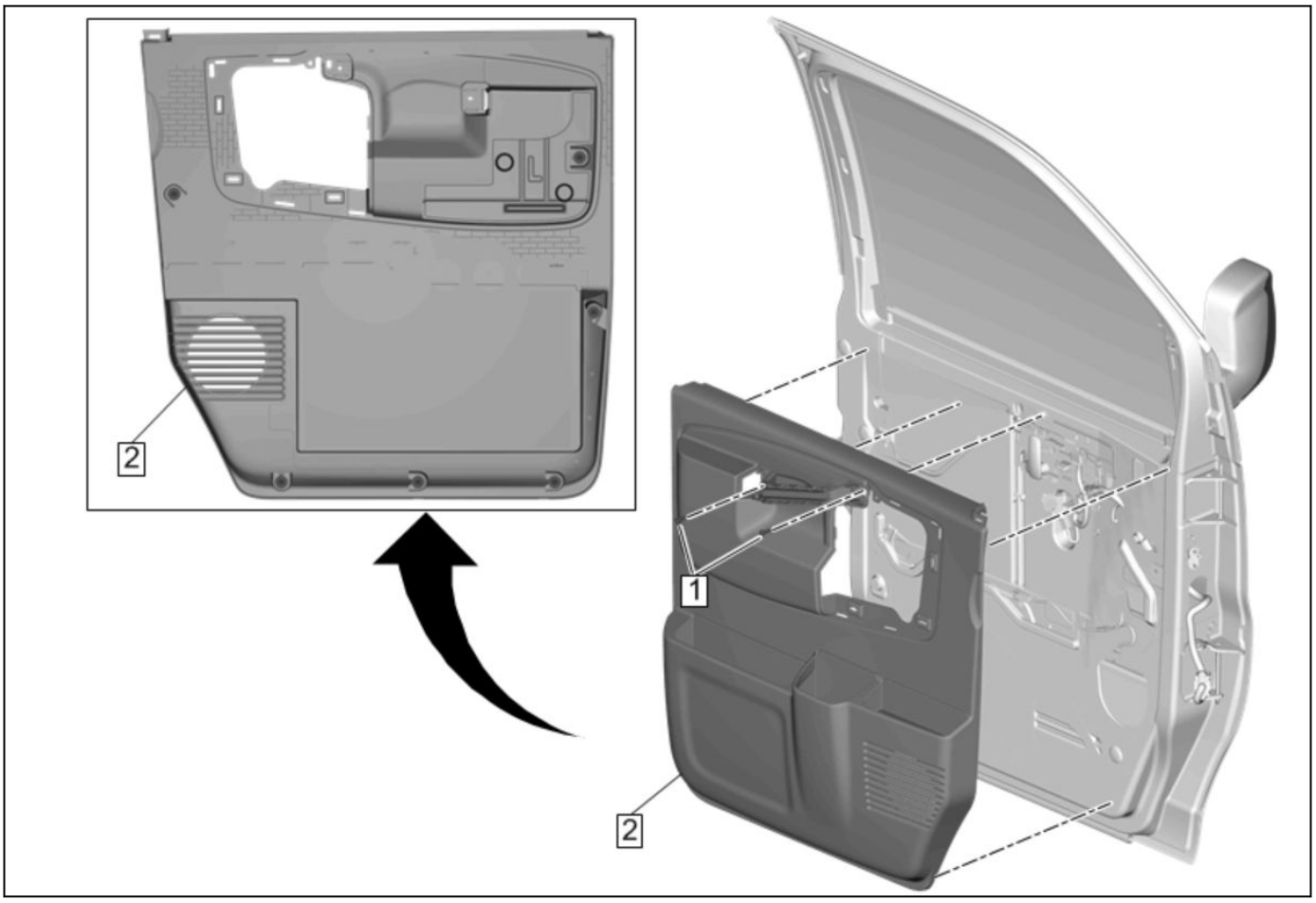

4848015

1. Front Side Door Trim Panel (2) » Remove— [Link target (target-id 149952-) not found]

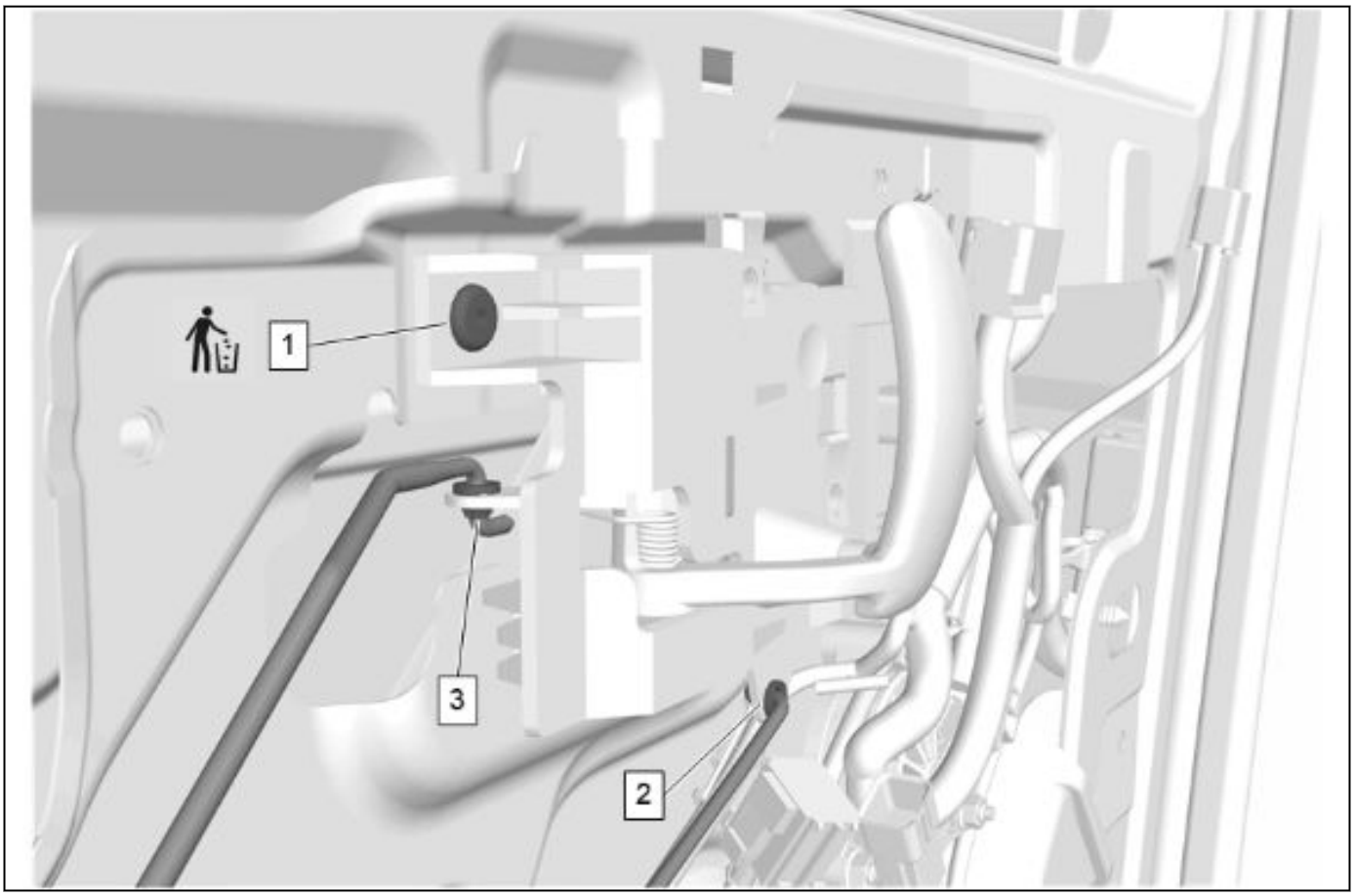

6100668

Warning: Refer to [Link target (target-id 178036-) not found] .

2. Drill out the rivet (1). Remove and DISCARD
3. Front Door Locking Rod (2) » Remove
4. Front Door Inside Handle Rod (3) » Remove

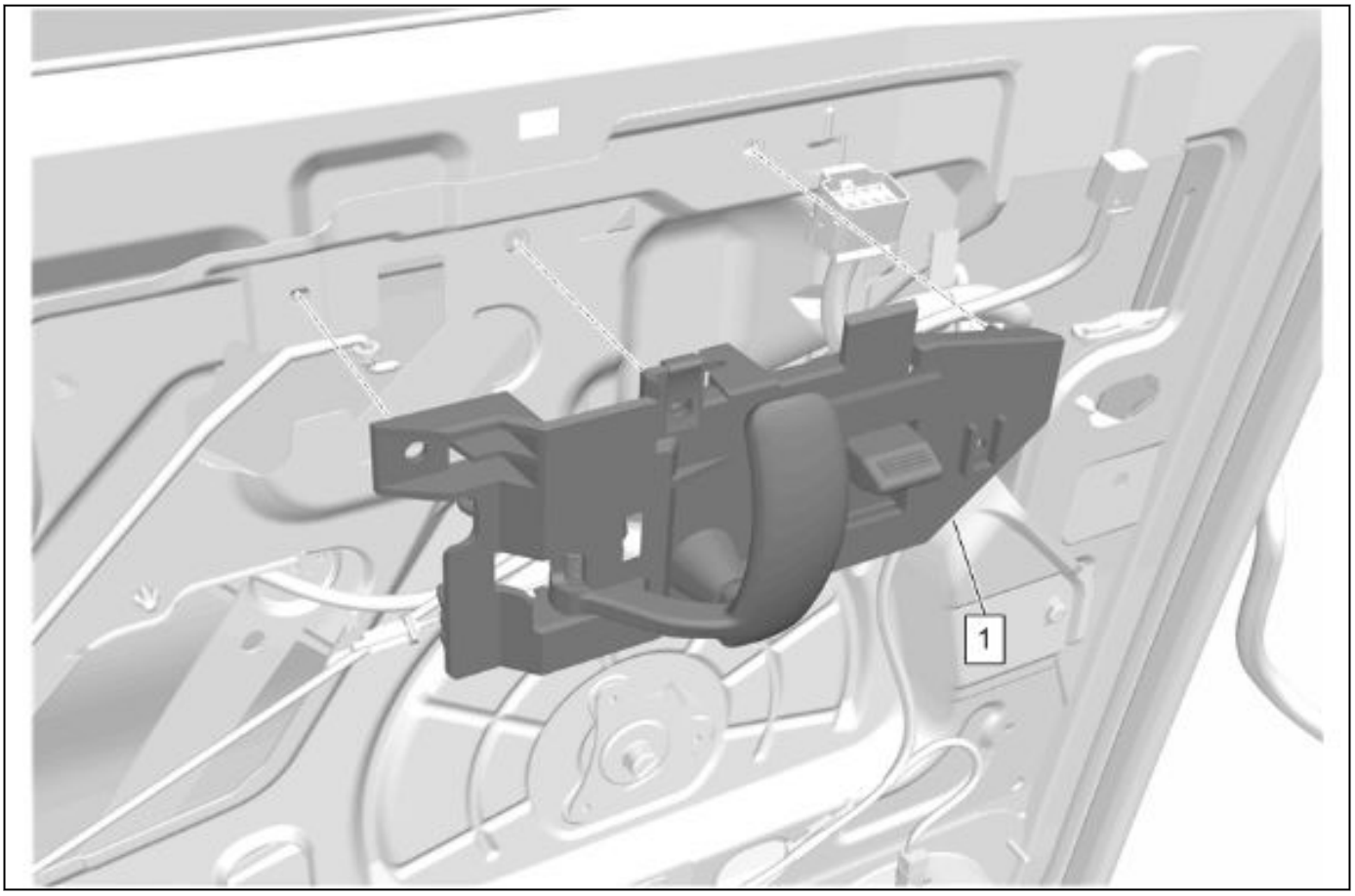

6100667

5. Front Side Door Inside Handle (1) » Remove

Installation Procedure

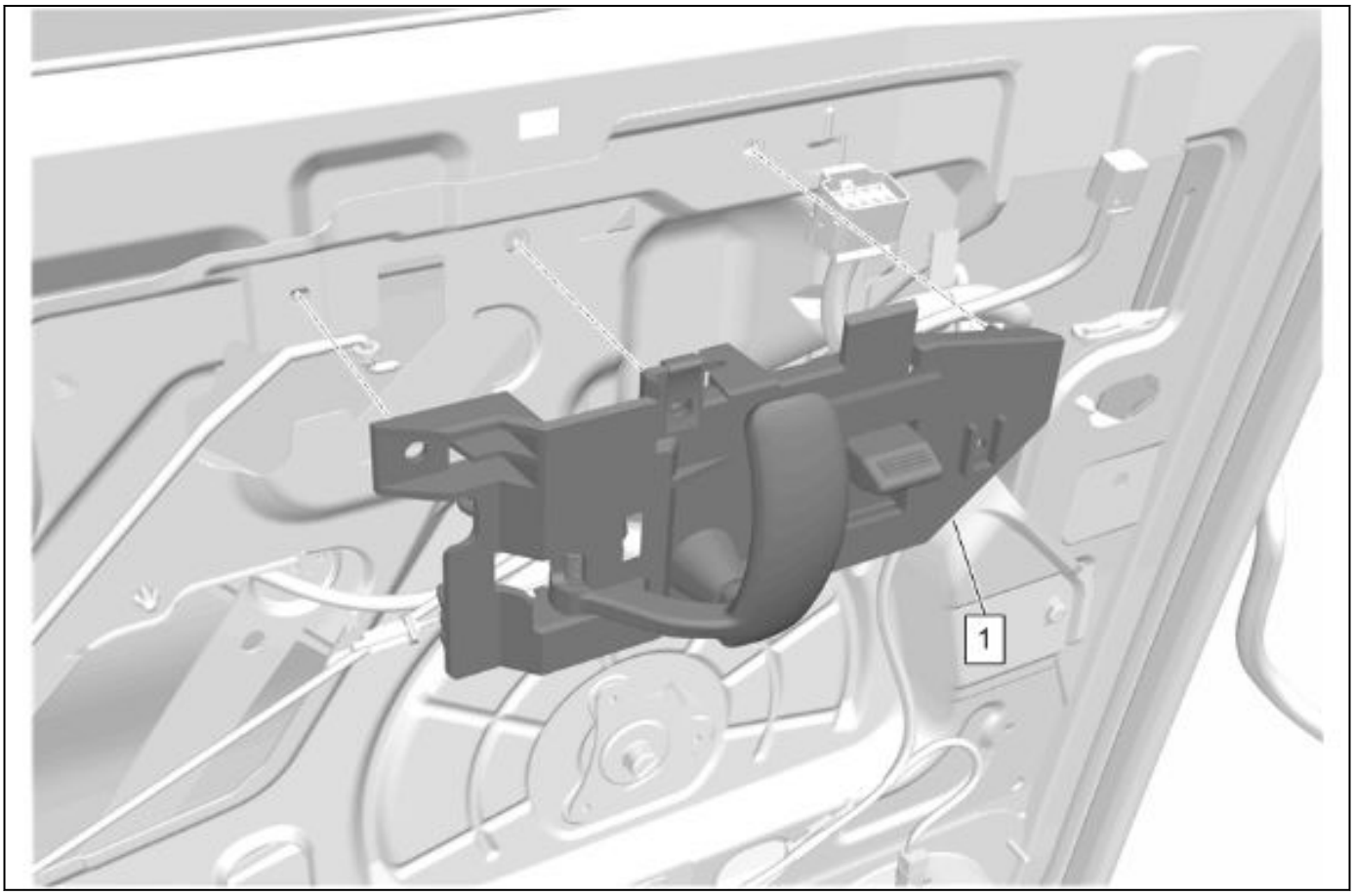

6100667

1. Front Side Door Inside Handle (1) » Install

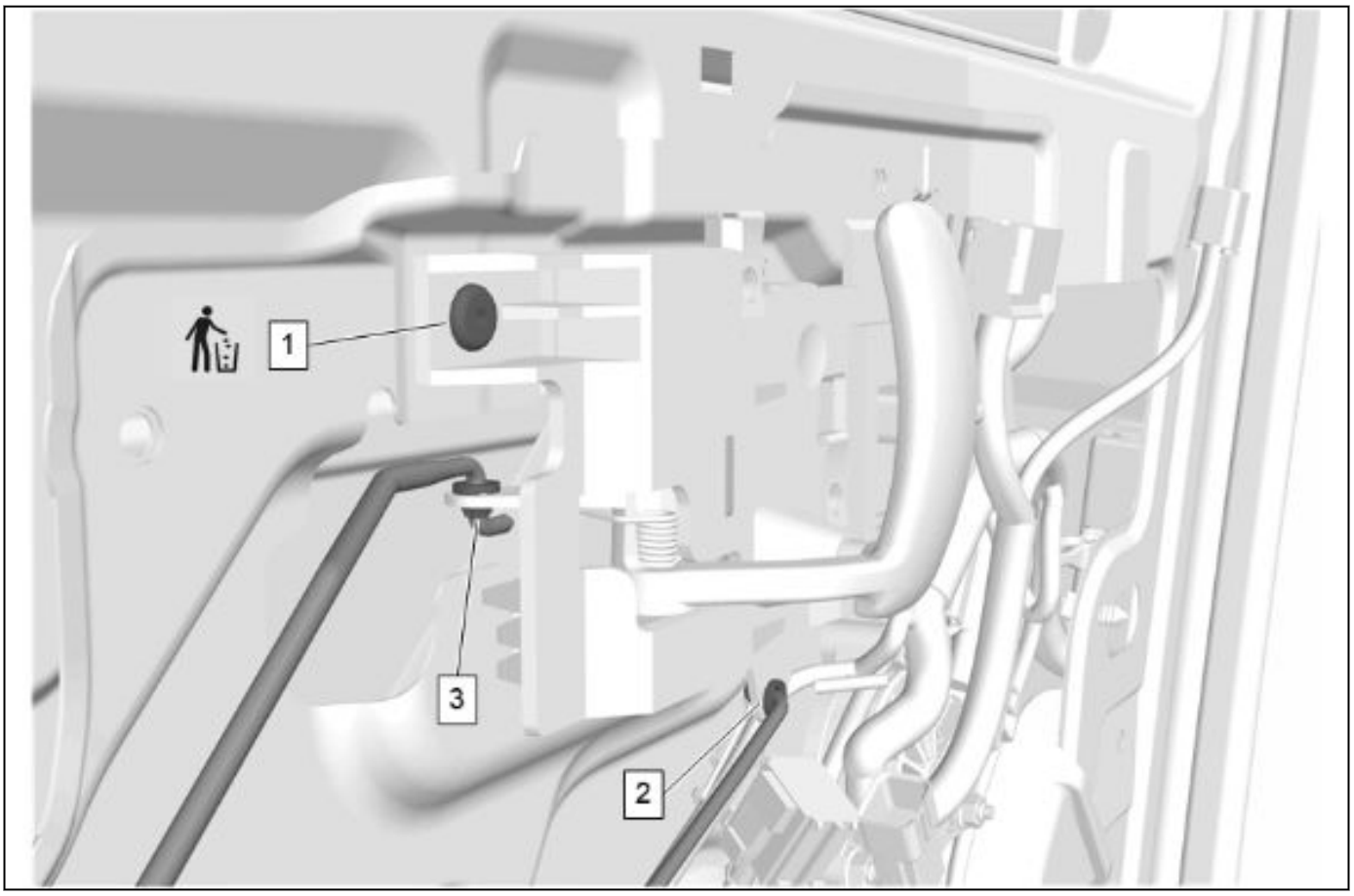

6100668

2. Front Door Inside Handle Rod (3) » Install
3. Front Door Locking Rod (2) » Install

Caution: Refer to [Link target (target-id 178169-) not found] .

4. Rivet (1) » Install NEW— *Fastener Specifications 1-95*

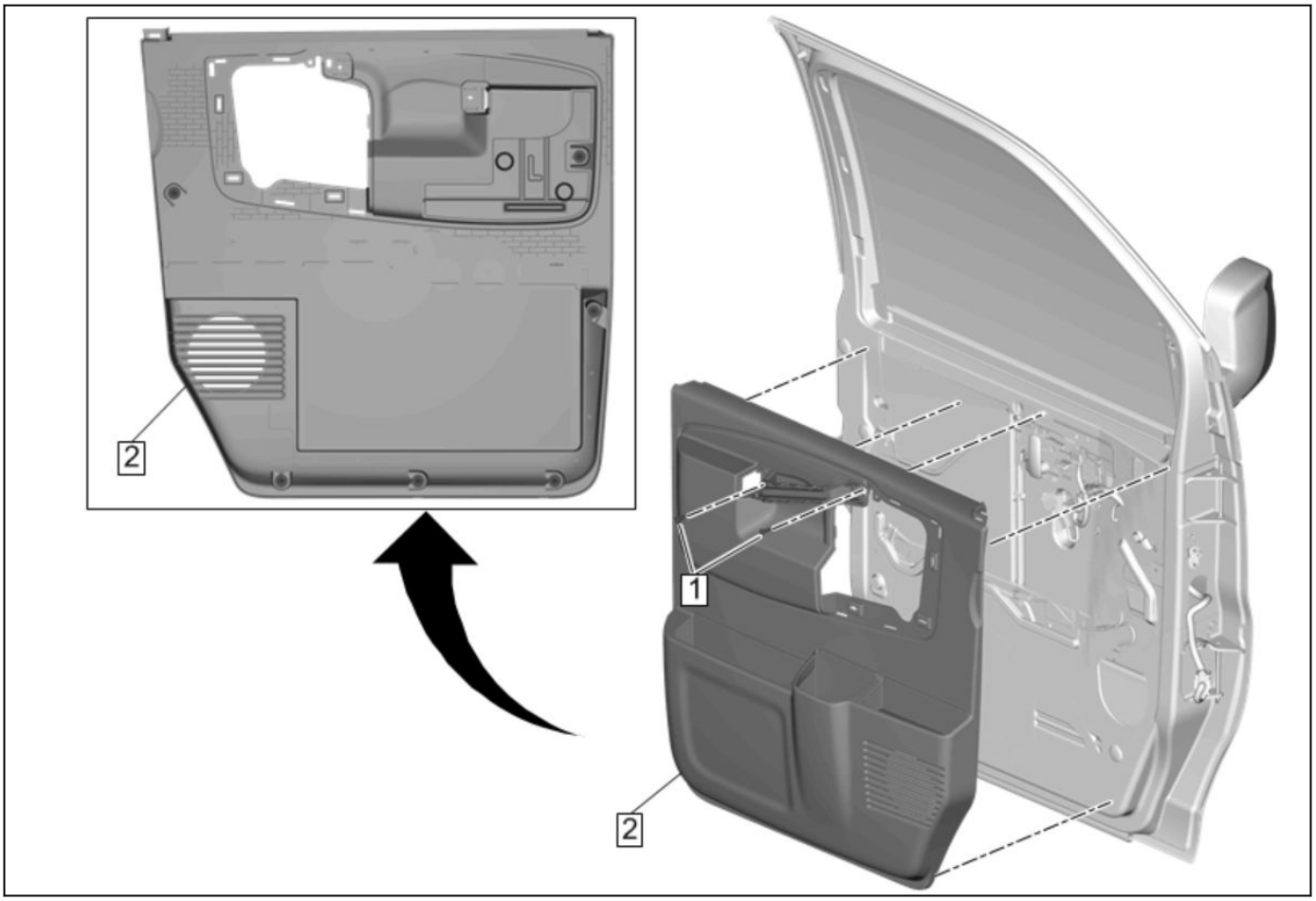

4848015

5. Front Side Door Trim Panel (2) » Install— [Link target (target-id 149952-) not found]

Front and Rear Side Door Outside Handle Rod Clip Replacement

Removal Procedure

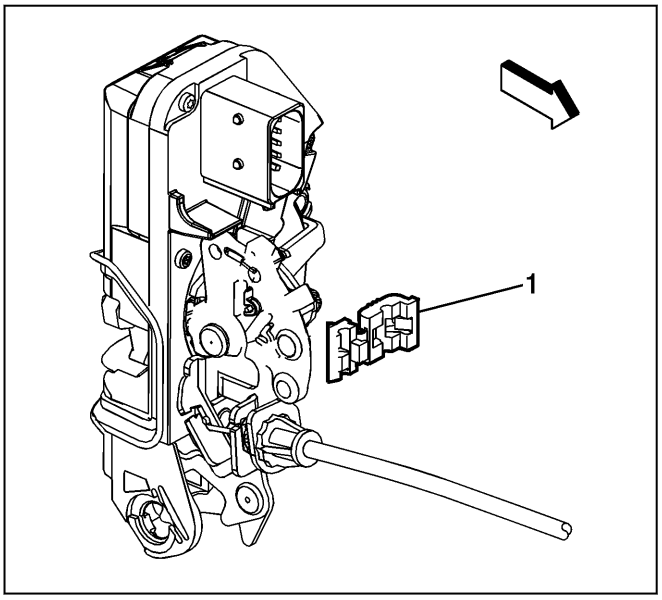

2829645

Note: It maybe necessary to remove the front or rear side door latch from some of the vehicles to access the rod clip, refer to the appropriate procedure in this sub-section.

1. Using the appropriate tool, open the outside door handle rod clip (1) on the latch.

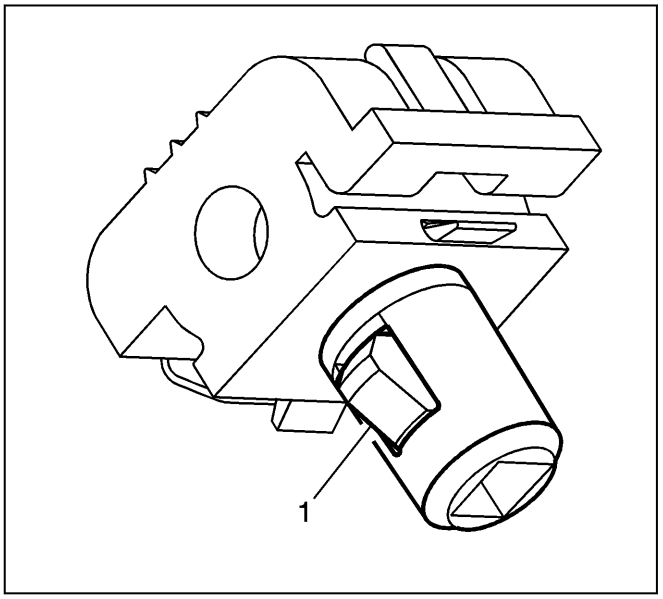

2790591

Note: The clip for the outside door handle rod is designed for one use only, a new clip Must be installed to the door latch to retain the outside handle rod.

Note: Use the appropriate tool to push in on the retaining tabs (1) located on each side of the old clip to remove.

2. Remove the old outside door handle rod clip from the door latch.

Installation Procedure

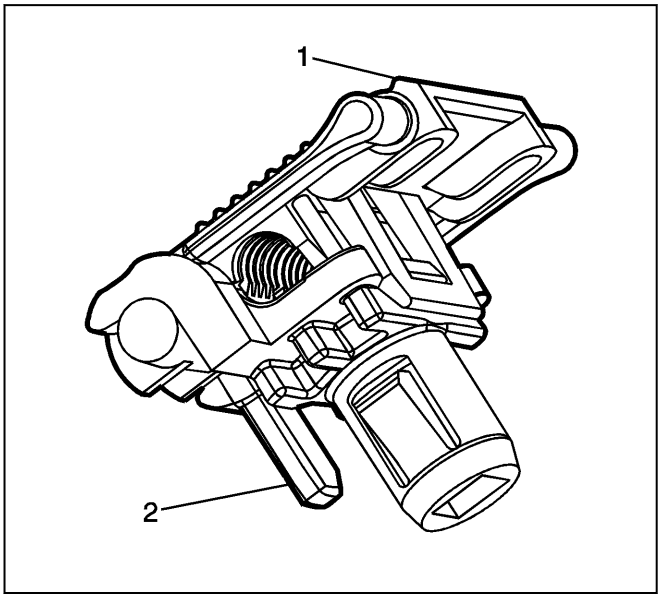

2790592

Note: When replacing the old designed outside door handle rod clip with the new designed clip (1) the anti rotation tab (2) will need to be removed.

Note: When installing the outside door handle rod to latch in order to prevent outside handle lever pre-load, the outside handle shall be fully secured to the door prior to securing integral latch clip to outside handle release rod. Push upward at the bottom the rod clip.

1. Install the new outside door handle rod clip (1) to the latch.
2. Verify the outside door handle will release the door latch.

Intermediate Side Door Inside Handle Replacement

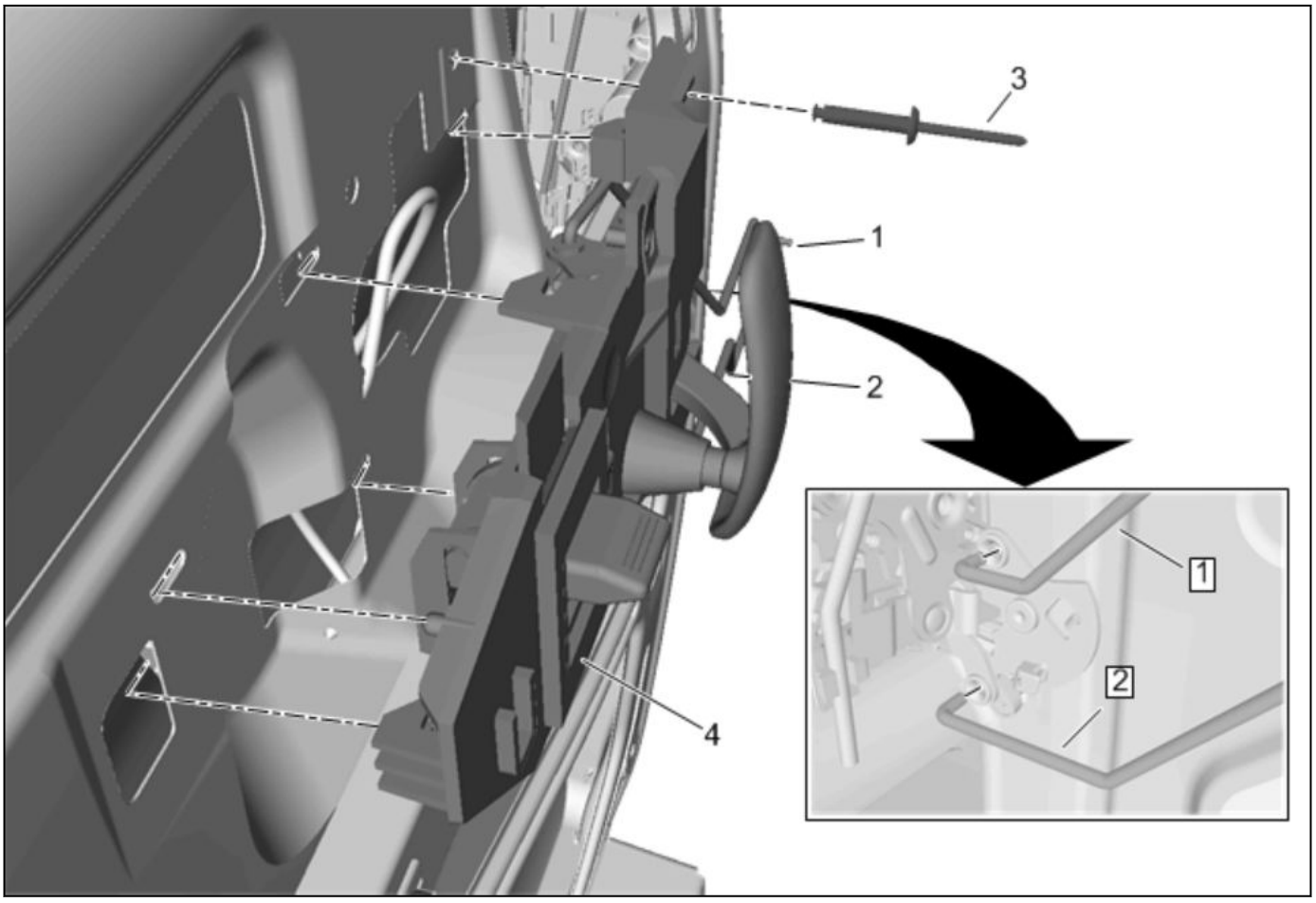

4855013

Intermediate Side Door Inside Handle Replacement

Callout	Component Name
Preliminary Procedure Remove rear side 60/40 door trim panel – right side (E24, 60 door). [Link target (target-id 149955-) not found]	
1	Intermediate Side Door Inside Handle Rod
2	Intermediate Side Door Locking Rod
3	Intermediate Side Door Inside Handle Rivot **Caution:** Refer to [Link target (target-id 178036-) not found] . **Procedure** Drill out the rivet.
4	Intermediate Side Door Inside Handle

Door Outside Handle Replacement

Removal Procedure

1. Front Side Door Water Deflector » Remove— [Link target (target-id 149852-) not found]

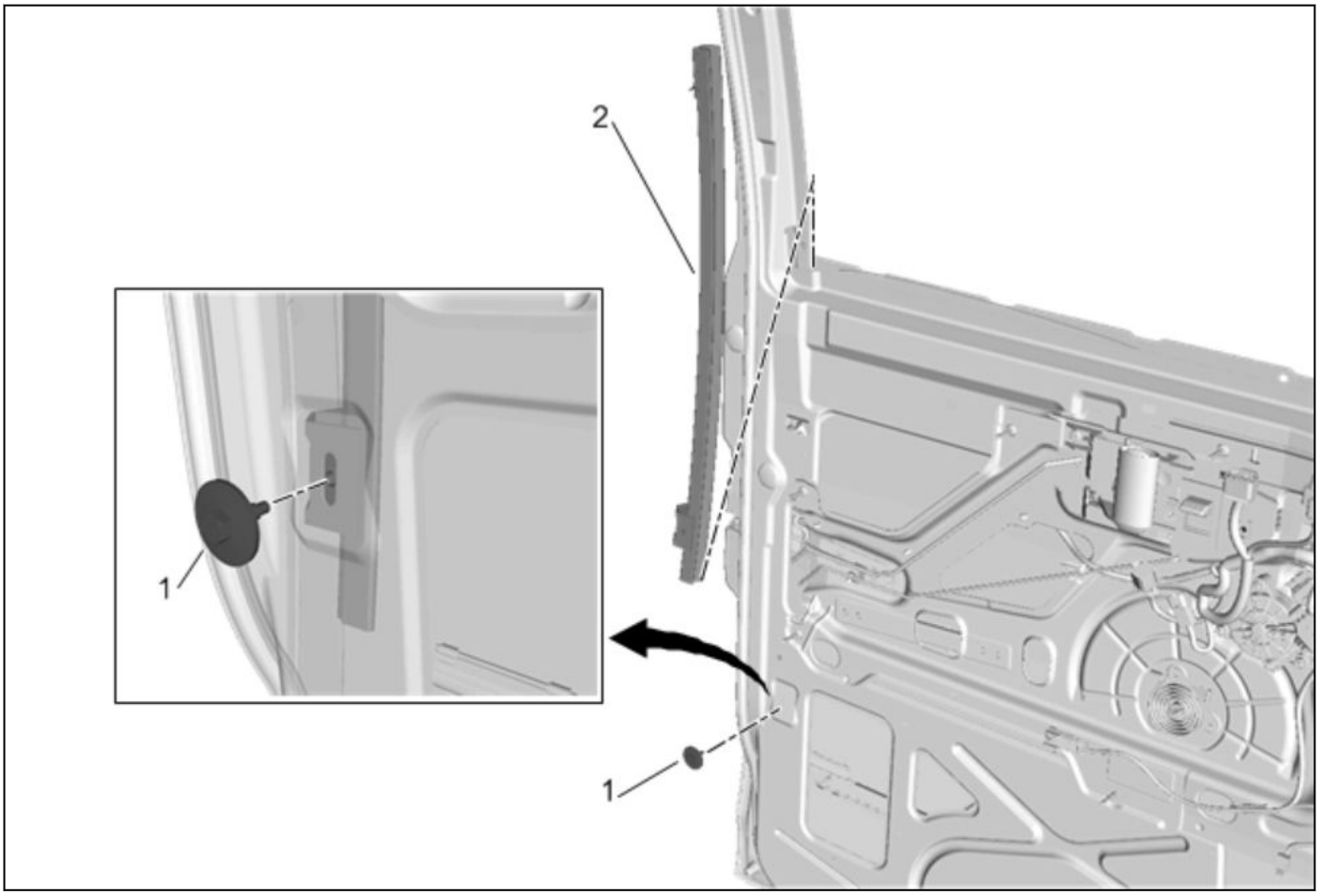

4847561

2. Front Side Door Window Channel - Lower Rear (2) » Remove— *Front Side Door Window Channel Replacement - Lower Rear 1-38*

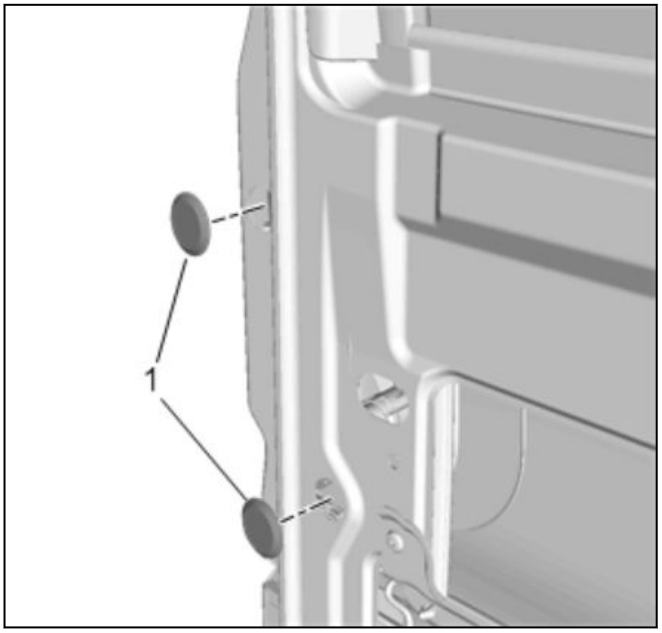

4848823

3. Front Side Door Access Hole Plug (1) » Remove[2x]

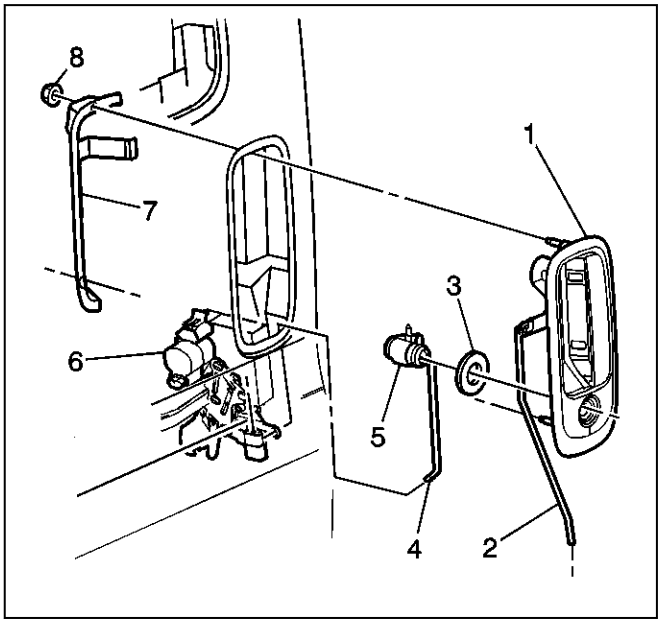

334032

4. Front Side Door Lock Cylinder Rod (4) » Remove
5. Front Side Door Outside Handle Rod (2) » Remove
6. Front Side Door Outside Handle Nut (8) » Remove
7. Front Side Door Outside Handle (1) » Remove
8. Transfer components as necessary.

Installation Procedure

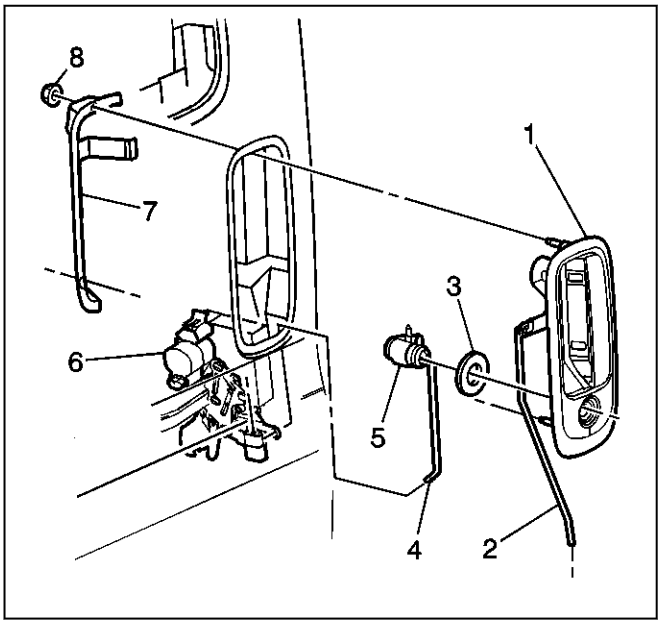

334032

1. Front Side Door Outside Handle (1) » Install
2. New and reused threaded components must have adhesive removed and reapplied. Perform the following steps before installation:
   2.1. Loosen the adhesive from the external threads of the components using a nylon wheel/brush and clean with brake cleaner or a similar solvent.
   2.2. Thread the cleaned components into the internal mating threads and remove to loosen trapped cured adhesive.
   2.3. Remove loose debris from internal and external threads using compressed air.
   2.4. Apply liquid thread locking adhesive in a strip along half of the length of the external threads, starting at the tip, just prior to installation.*Adhesives, Fluids, Lubricants, and Sealers 1-95*

Caution: Refer to [Link target (target-id 178169-) not found] .

3. Front Side Door Outside Handle Nut (8) » Install and tighten**11 newtonm (97 lb in)**
4. Front Side Door Lock Cylinder Rod (4) » Install
5. Front Side Door Outside Handle Rod (2) » Install

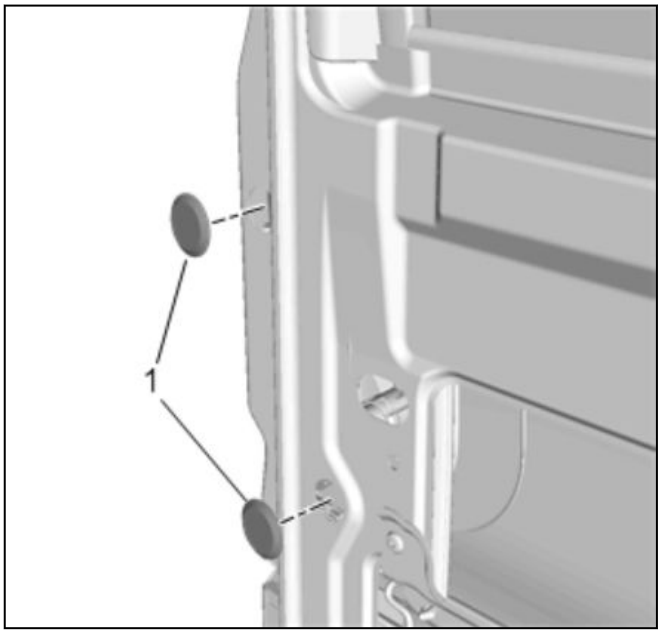

4848823

6. Front Side Door Access Hole Plug (1) » Install[2x]

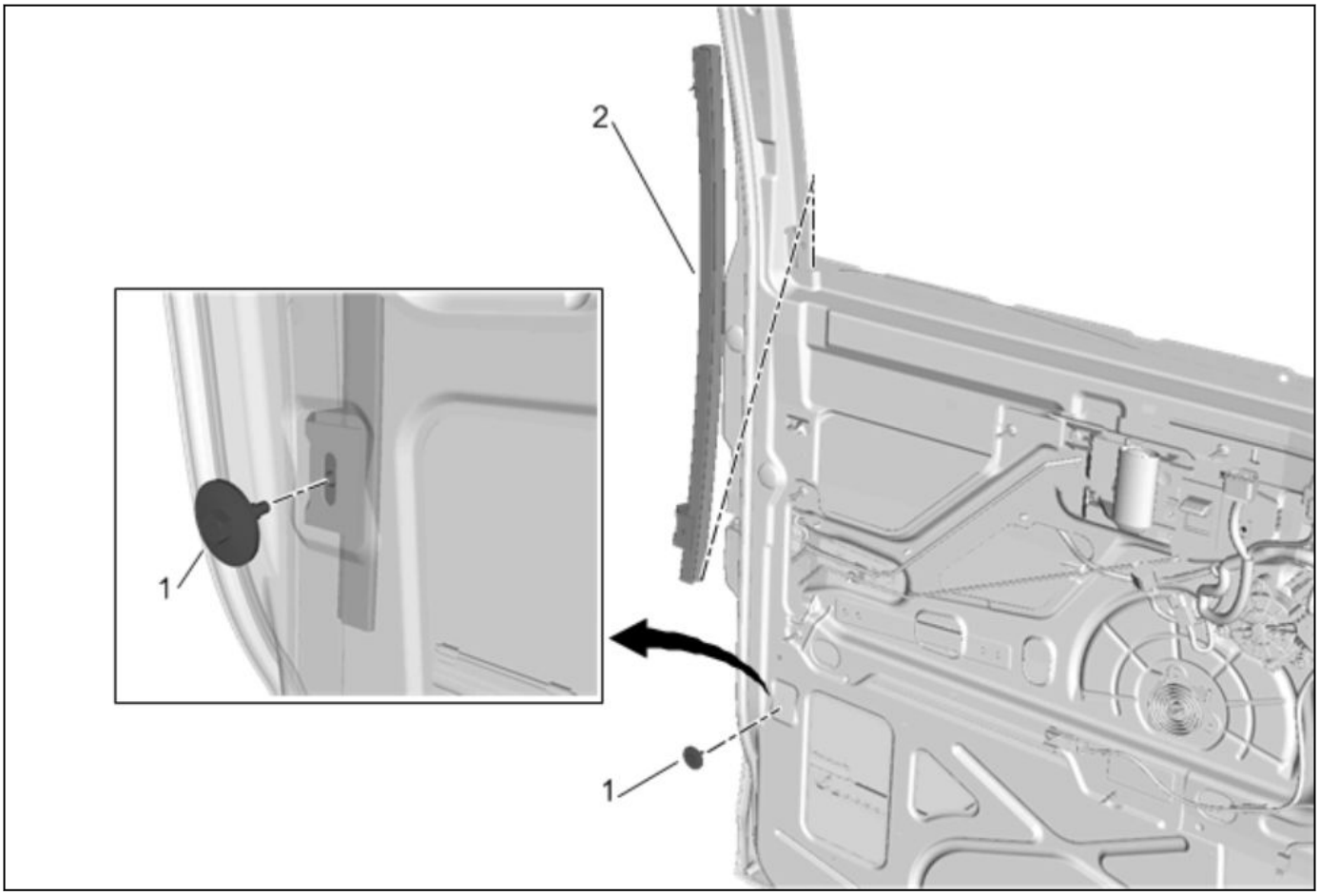

4847561

7. Front Side Door Window Channel - Lower Rear (2) » Install— *Front Side Door Window Channel Replacement - Lower Rear 1-38*
8. Front Side Door Water Deflector » Install— [Link target (target-id 149852-) not found]

Sliding Door Outside Handle Replacement

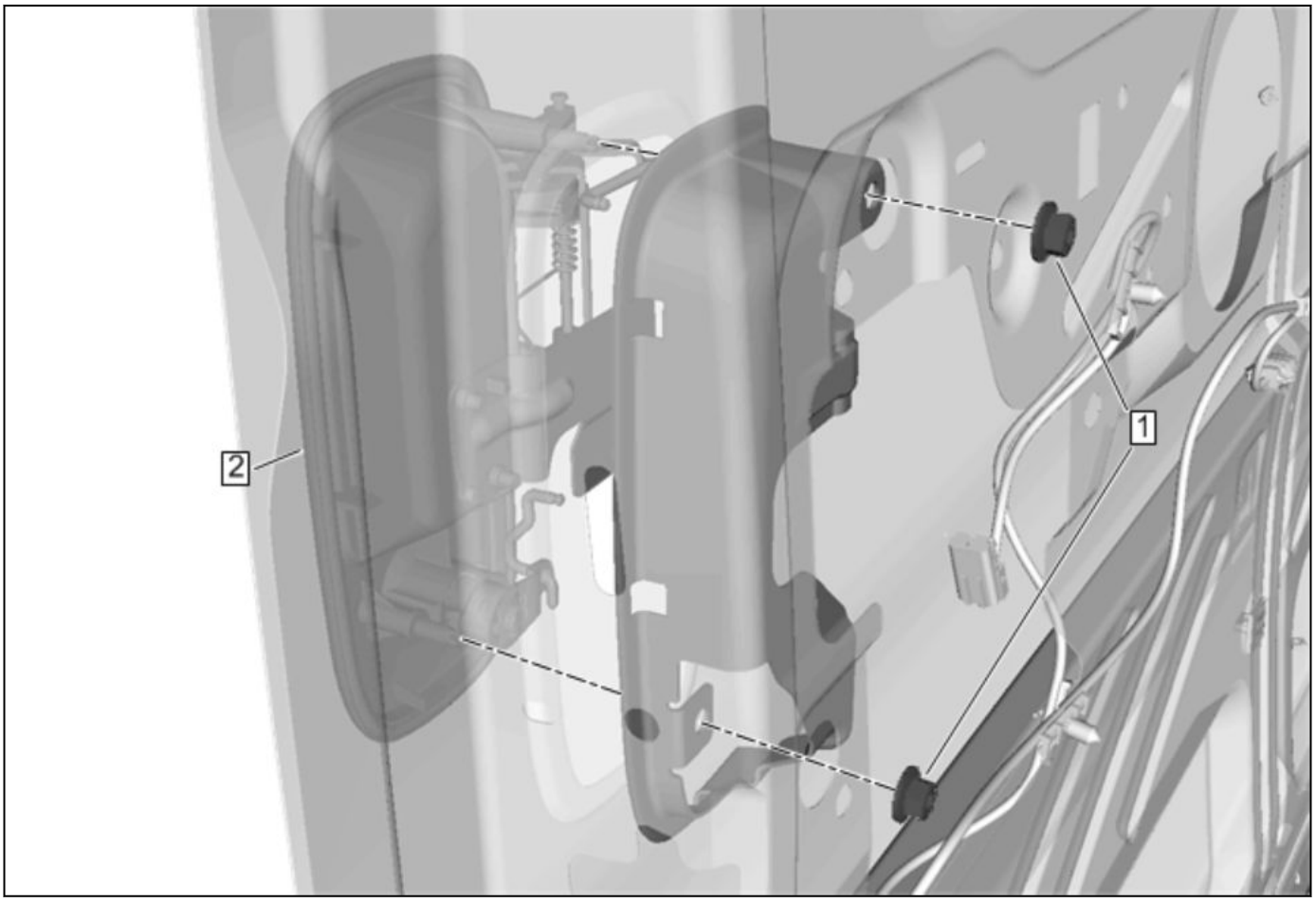

4867312

Sliding Door Outside Handle Replacement

Callout	Component Name
Preliminary Procedure *Door Control Replacement 1-105*	
1	Rear Side Door Outside Handle Nut [2x] **Caution:** Refer to [Link target (target-id 178169-) not found] . **Tighten** 11 newtonm (97 lb in)
2	Sliding Door Outside Handle

Rear Door Inside Handle Replacement

Removal Procedure

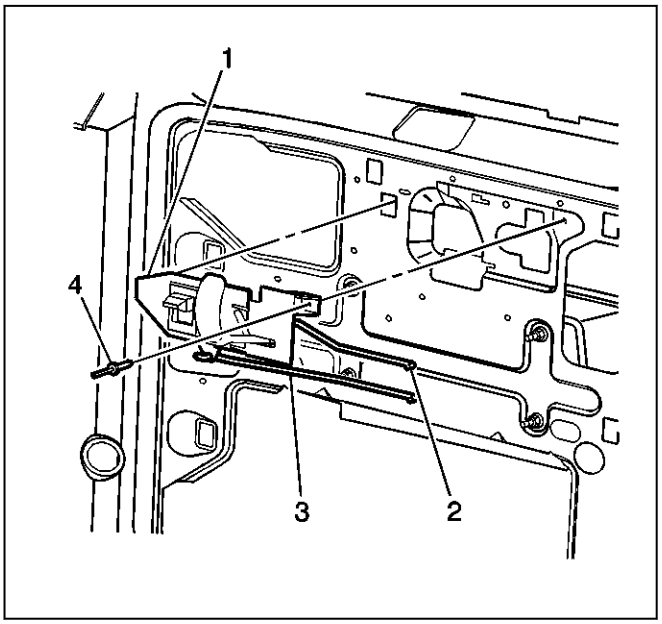

334069

1. Remove the right side rear door trim panel. Refer to [Link target (target-id 149950-) not found] .
2. Remove the rivet (4) at the rear edge of the rear door inside handle.
3. Remove the lock rods (3) from the lock.
4. Remove the rear door inside handle from the right rear door.
5. Transfer parts.

Installation Procedure

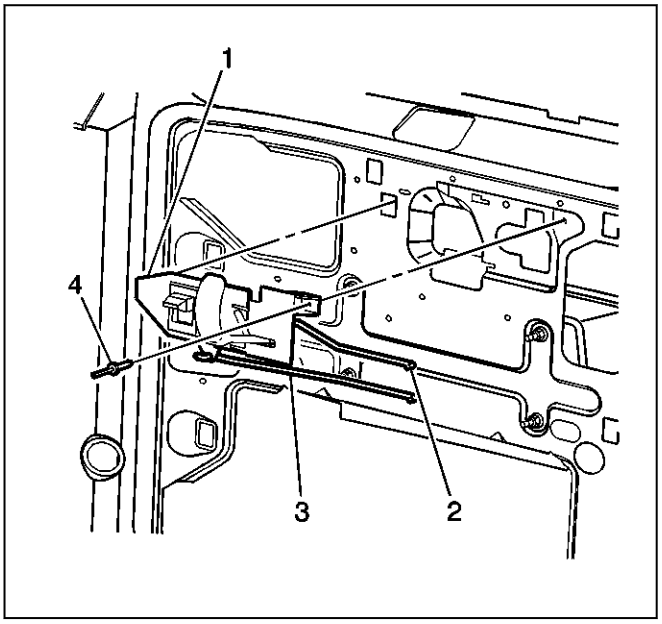

334069

1. Install the rear door inside handle to the right rear door.
2. Install the lock rods (3) to the lock.
3. Install the rivet (4) at the rear edge of the rear door inside handle.
4. Install the right side rear door trim panel. Refer to [Link target (target-id 149950-) not found] .

Rear Door Latch Control Replacement

Removal Procedure

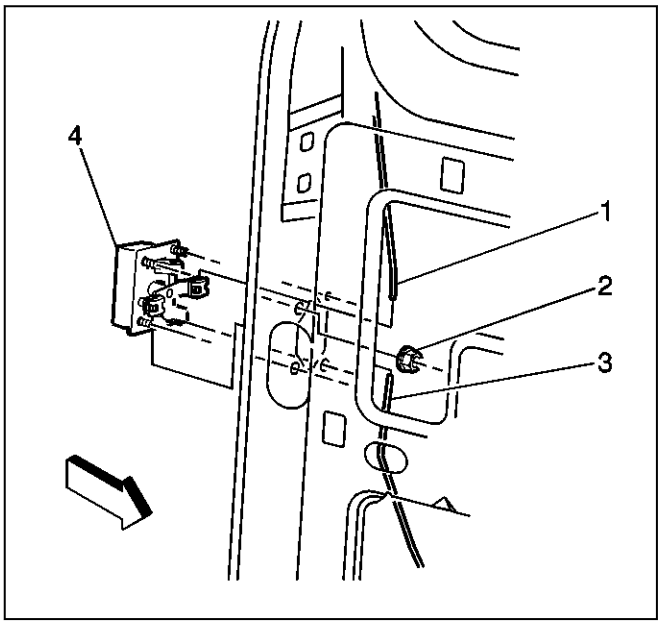

334092

1. Remove the rear door trim panel, left side. Refer to [Link target (target-id 149949-) not found] .
2. Remove the lock rods (1, 3) from the rear door latch control, left side (4).
3. Remove the two nuts (2) that retain the rear door latch control (4) to the rear door.
4. Remove the left side rear door latch control (4) from the vehicle.

Installation Procedure

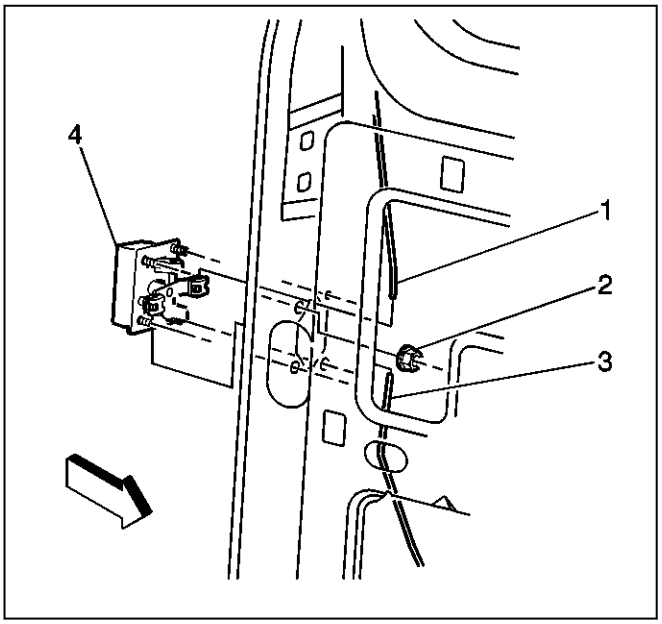

334092

1. Install the rear door latch control (4) to the vehicle.

Caution: Refer to [Link target (target-id 178169-) not found] .

2. Install the two nuts (2) that retain the rear door latch control (4) to the rear door, left side and tighten to **11 newtonm (97 lb in)**.
3. Install the lock rods (1, 3) to the rear door latch control (4), left side.
4. Install the rear door trim panel, left side. Refer to [Link target (target-id 149949-) not found] .

Rear Side Door Latch Control Replacement

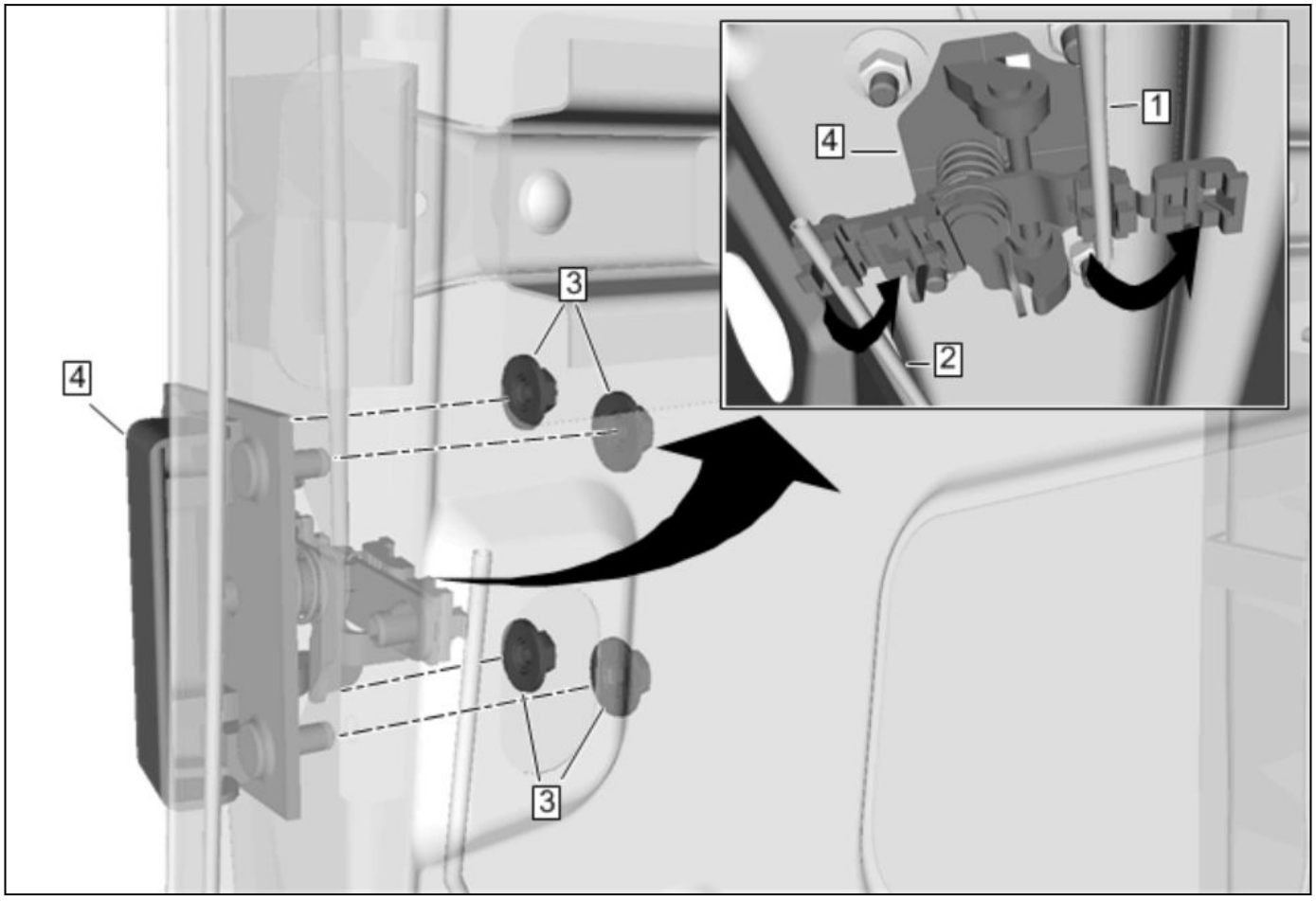

4855017

Rear Side Door Latch Control Replacement

Callout	Component Name
Preliminary Procedure Remove rear side 60/40 door trim panel – right side (E24, 40 door). [Link target (target-id 149955-) not found]	
1	Rear Side Door Latch Rod
2	Rear Side Door Lower Latch Rod
3	Rear Side Door Latch Control Nut [4x] **Caution:** Refer to [Link target (target-id 178169-) not found] . **Tighten** 7 newtonm (62 lb in)
4	Rear Side Door Latch Control

Sliding Door Inside Handle Replacement

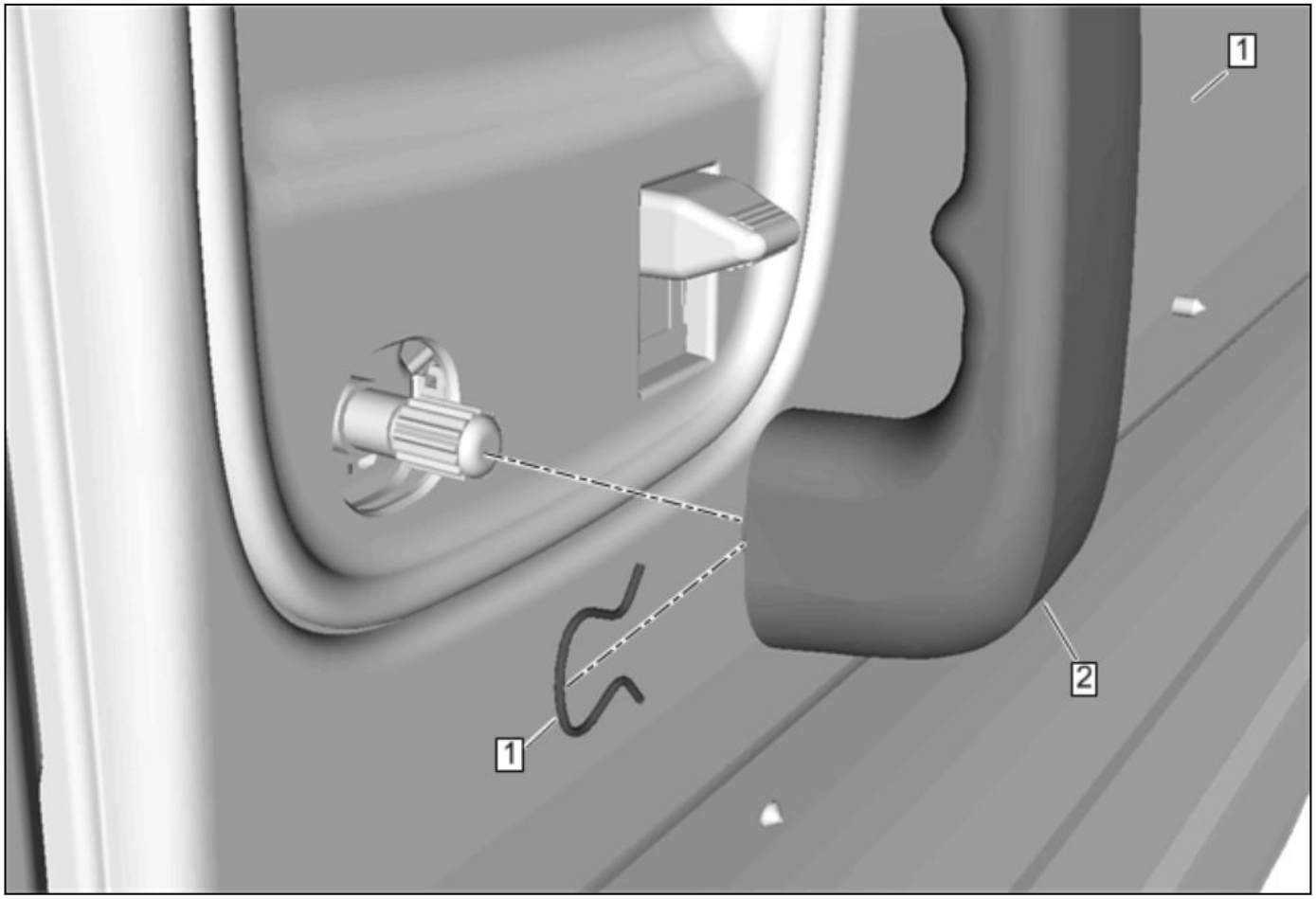

4867306

Sliding Door Inside Handle Replacement

Callout	Component Name
1	Rear Side Door Inside Handle Clip **Procedure** using a suitable tool, remove the door window regulator handle clip.
2	Sliding Door Inside Handle

Rear Door Latch Replacement - Lower

Removal Procedure

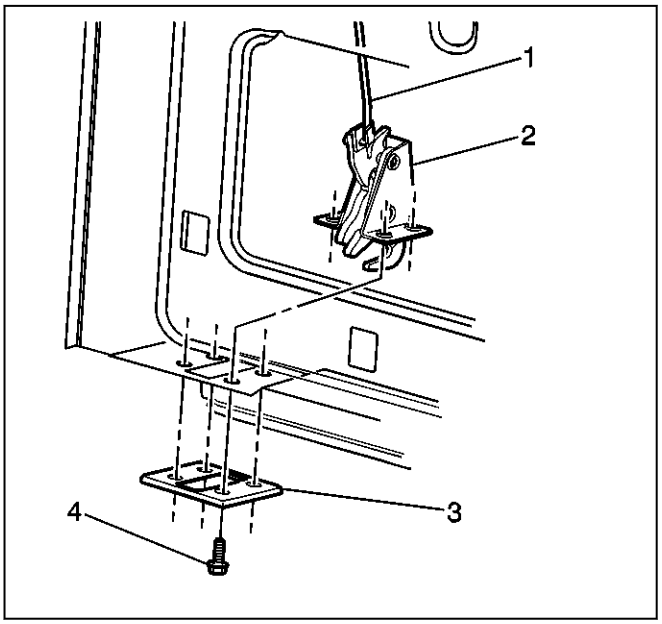

334093

1. Remove the rear door trim panel - left side. [Link target (target-id 149949-) not found]
2. Remove the lock rod (1) from the left side rear door lower latch (2).
3. Remove the 4 bolts (4) and rear side door inner panel latch reinforcement (3) that retains the left side rear door lower latch (2) to the door.
4. Remove the left side rear door lower latch (2) from the door.

Installation Procedure

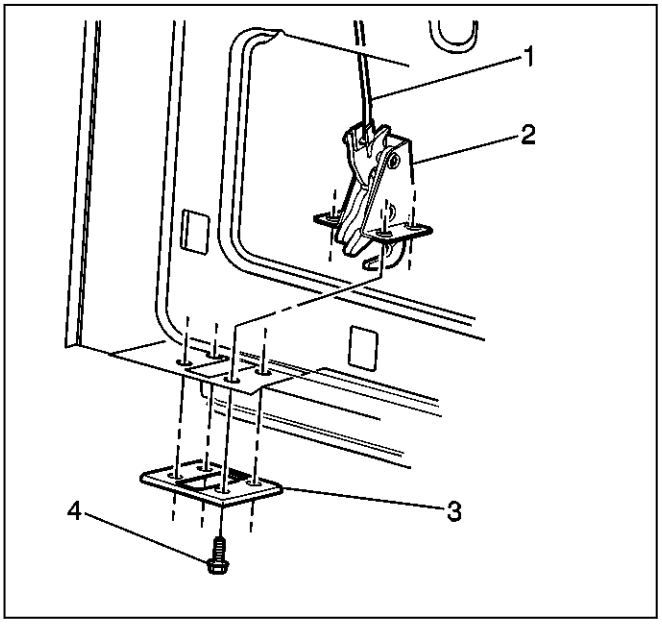

334093

1. Install the left side rear door lower latch (2) to the door.

Caution: Refer to [Link target (target-id 178169-) not found] .

2. Install rear side door inner panel latch reinforcement (3) and the 4 bolts (4) in order to retain the left side rear door lower latch (2) to the door and tighten to **25 newtonm (18 lb ft)**.
3. Install the lock rod (1) to the left side rear door lower latch (2).
4. Install the rear door trim panel - left side. [Link target (target-id 149949-) not found]

Rear Side Door Latch Replacement (Cargo Door)

Removal Procedure

1. Open the door.
2. Disconnect the power connector.

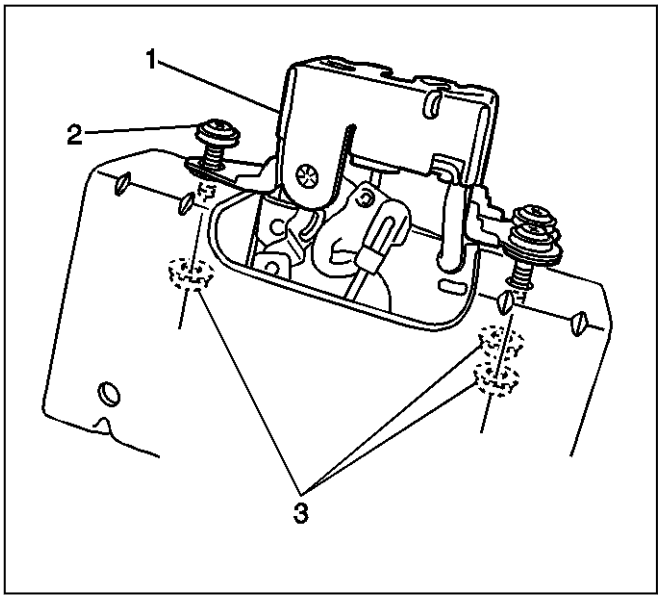

834699

3. Remove the latch bolts (2).
4. Remove the latch (1).

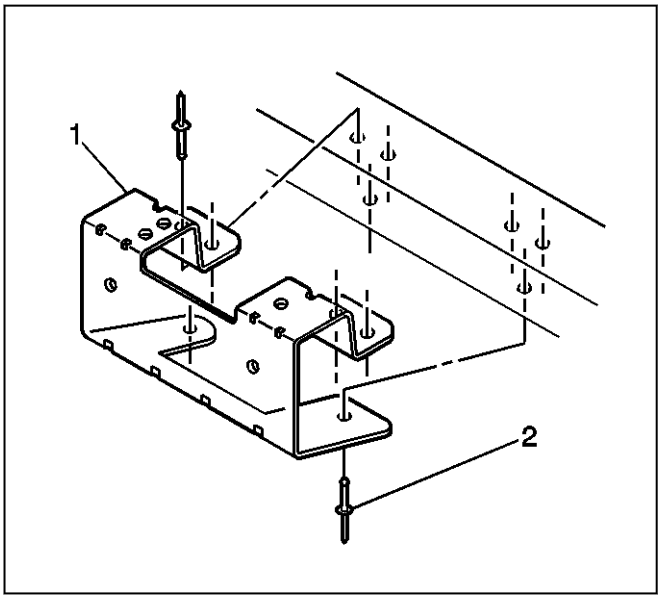

834697

5. Drill out the rivets (2).
6. Remove the latch bracket (1).

Installation Procedure

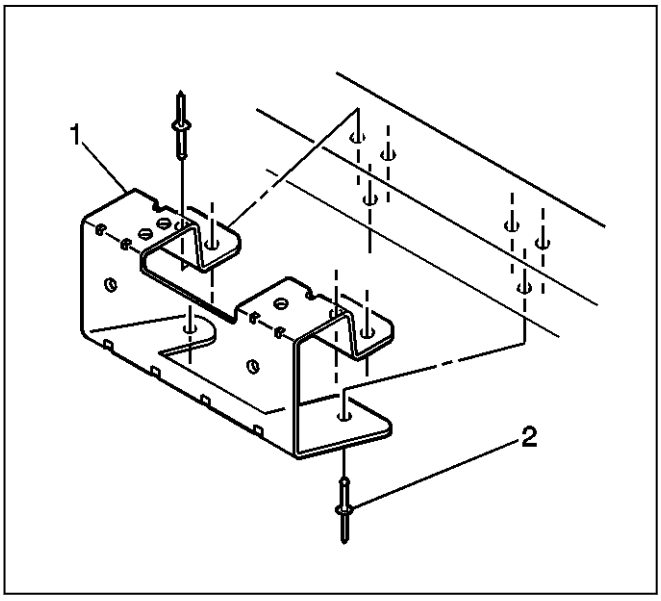

834697

1. Install the latch brackets (1).
2. Install the rivets (2).

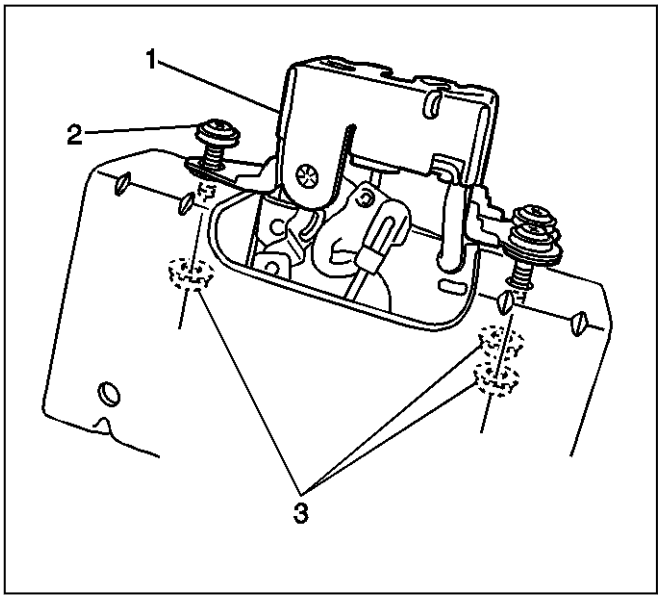

834699

3. Install the latch (1).

Caution: Refer to [Link target (target-id 178169-) not found] .

4. Install the latch bolts (2) and tighten to **10 newtonm (89 lb in)**.
5. Connect the electrical connection.

Rear Side Door Latch Replacement (Front Door)

Removal Procedure

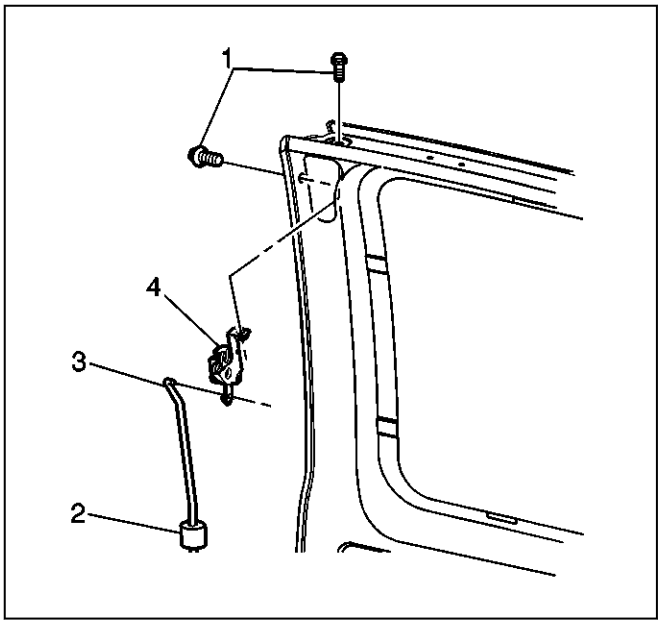

334095

1. Rear Side Door Trim Panel » Remove— [Link target (target-id 149955-) not found]
2. Remove the rear side door latch bolt (1) from the rear side door latch (4).

3. Remove the rear side door latch lock rod (3) from the rear side door latch (4).
4. Remove the rear side door latch (4).

Installation Procedure

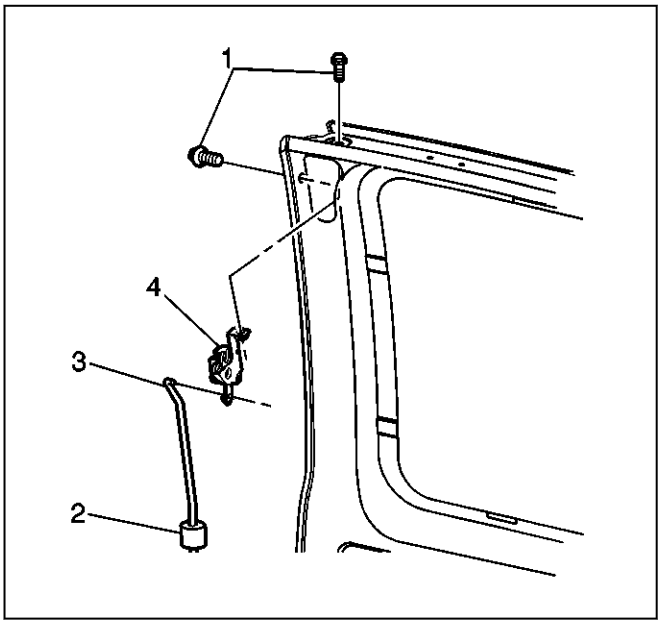

334095

1. Install the rear side door latch lock rod (3) to the rear side door latch (4).
2. Install the rear side door latch (4) to the rear side door.

Caution: Refer to [Link target (target-id 178169-) not found] .

3. Rear Side Door Latch Bolt (1) Install and tighten[2x] **25 newtonm (18 lb ft)**.
4. Rear Side Door Trim Panel » Install— [Link target (target-id 149955-) not found]

Rear Side Door Lower Latch Replacement

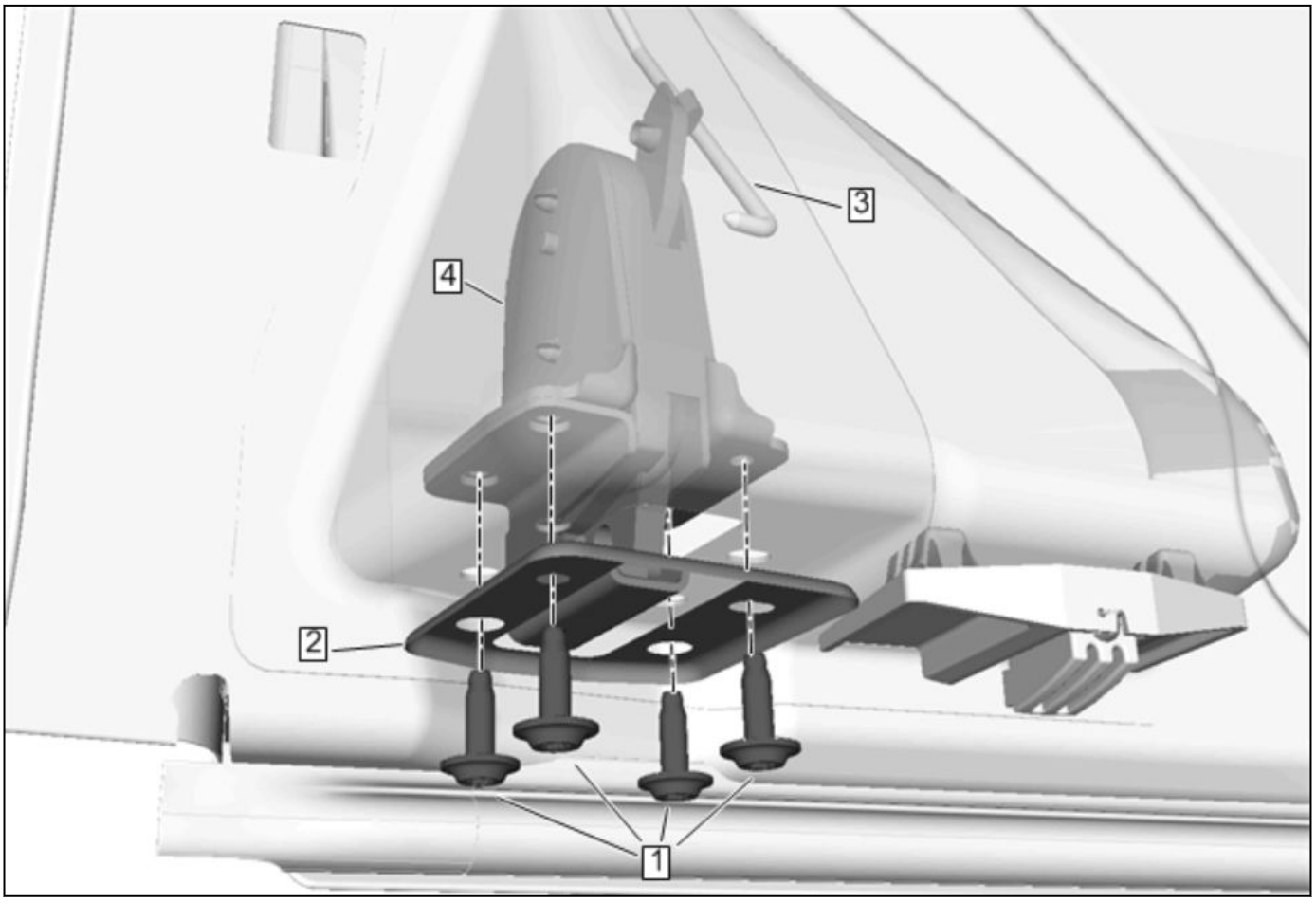

4855019

Rear Side Door Lower Latch Replacement

Callout	Component Name
Preliminary Procedure Remove rear side 60/40 door trim panel – right side (E24, 40 door). [Link target (target-id 149955-) not found]	
1	Rear Side Door Latch Bolt [4x] **Caution:** Refer to [Link target (target-id 178169-) not found] . **Tighten** 10 newtonm (88 lb in)
2	Rear Side Door Inner Panel Latch Reinforcement – Lower
3	Rear Side Door Lower Latch Rod
4	Rear Side Door Lower Latch

Rear Side Door Latch Replacement - Upper

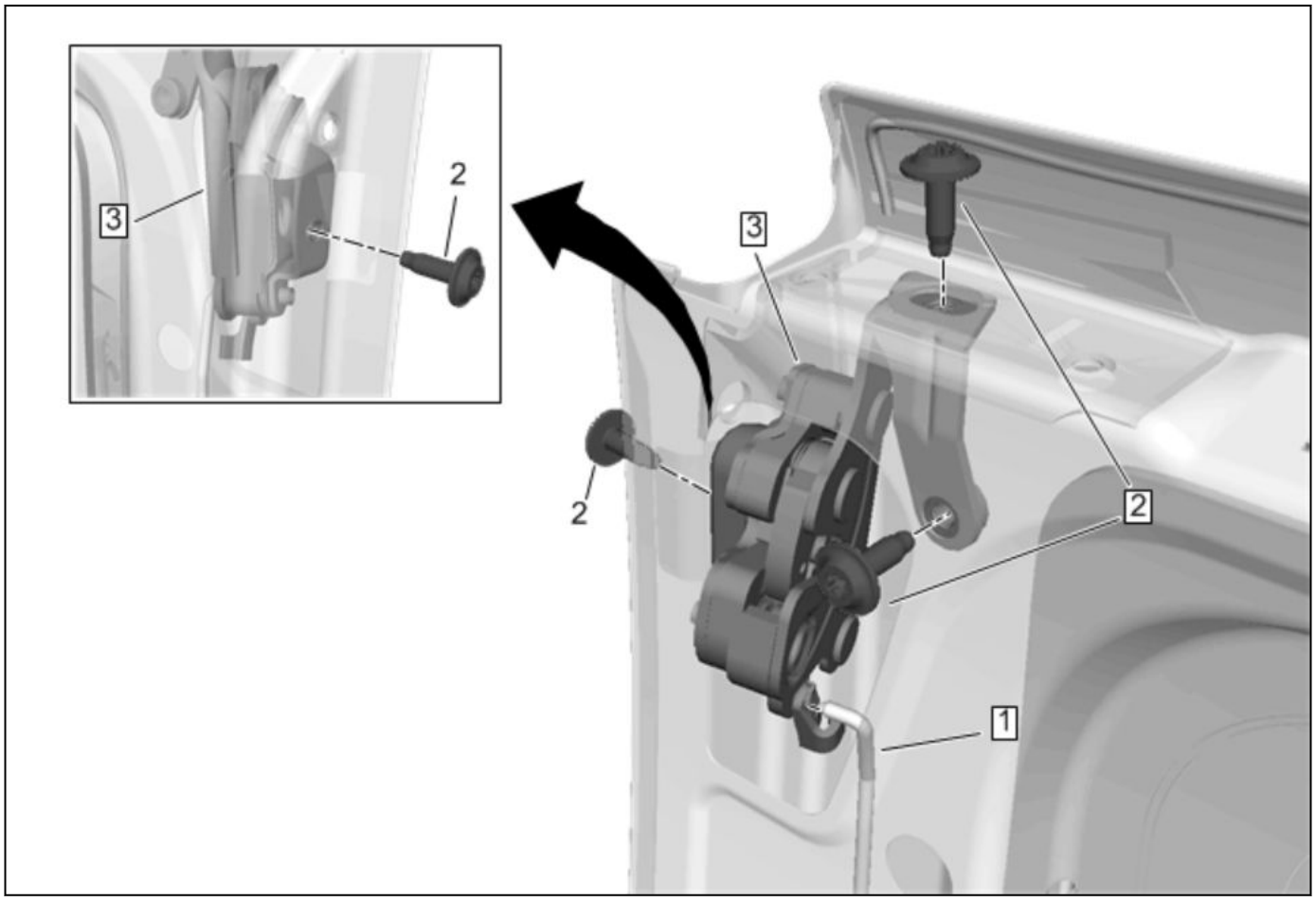

4855022

Rear Side Door Latch Replacement - Upper

Callout	Component Name
Preliminary Procedures 1. Reposition the rear side door weatherstrip. [Link target (target-id 150116-) not found] 2. Remove rear side 60/40 door trim panel – right side (E24, 40 door). [Link target (target-id 149955-) not found]	
1	Rear Side Door Latch Rod
2	Rear Side Door Latch Bolt [3x] **Caution:** Refer to [Link target (target-id 178169-) not found] . **Tighten** 10 newtonm (88 lb in)
3	Rear Side Door Upper Latch

Rear Door Latch Replacement - Upper

Removal Procedure

1. Remove the left side rear door trim panel. [Link target (target-id 149949-) not found]

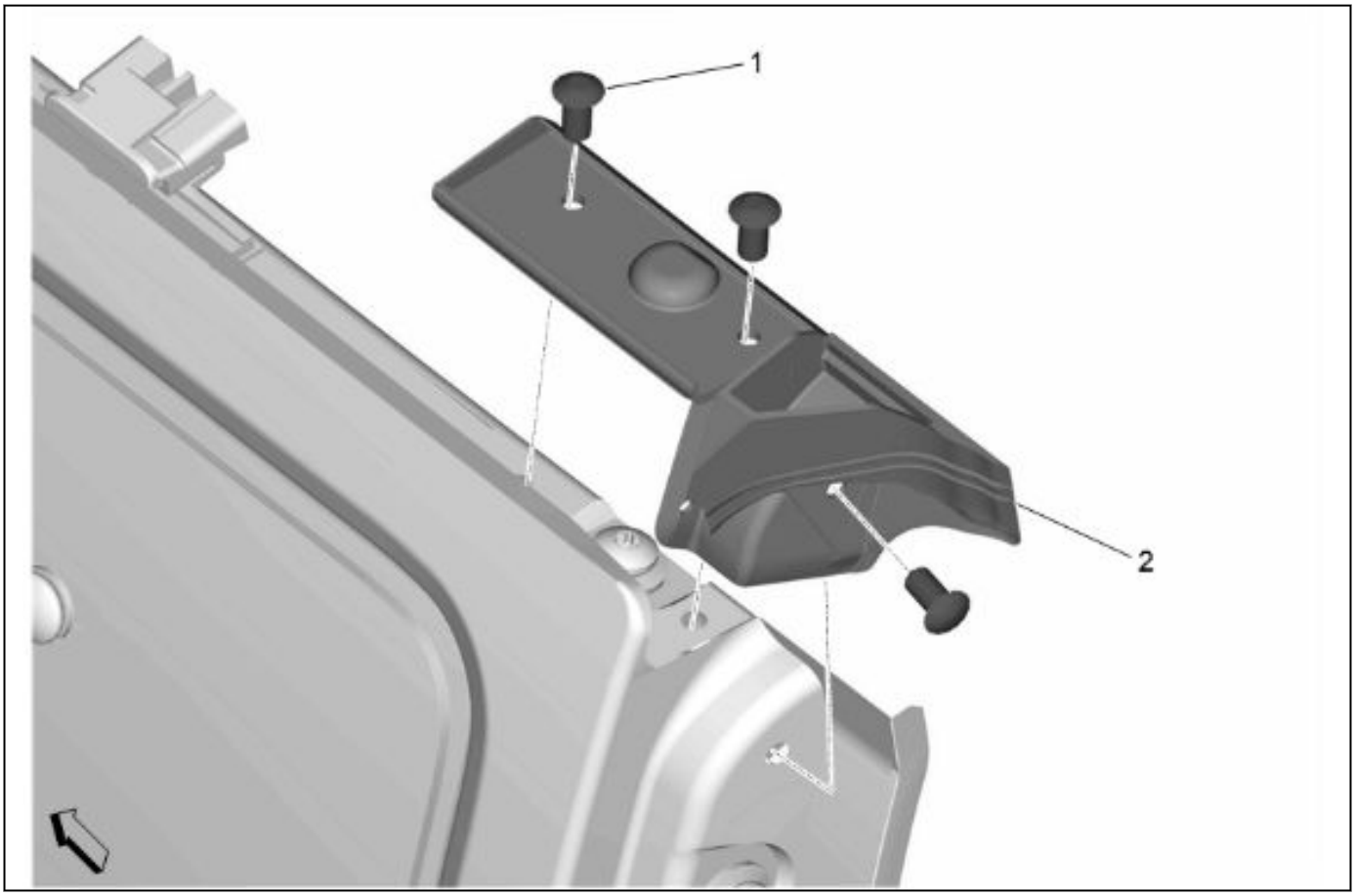

6379526

2. Rear Door Weatherstrip Retainer (1) » Remove[3x]
3. Rear Door Weatherstrip (2) » Remove

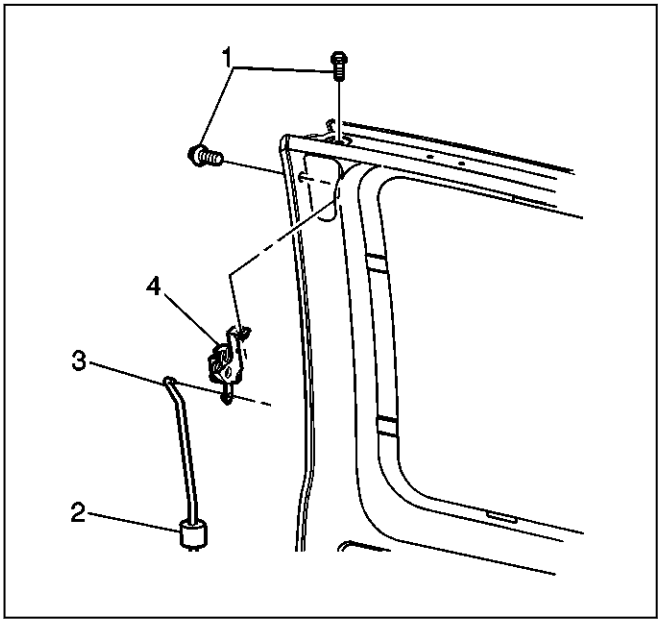

334095

4. Remove the lock rod (3) and bumper (2) from the left side rear door upper latch (4).
5. Remove the 2 bolts (1) that retains the left side rear door upper latch (4) to the door.
6. Remove the left side rear door upper latch (4) from the door.

Installation Procedure

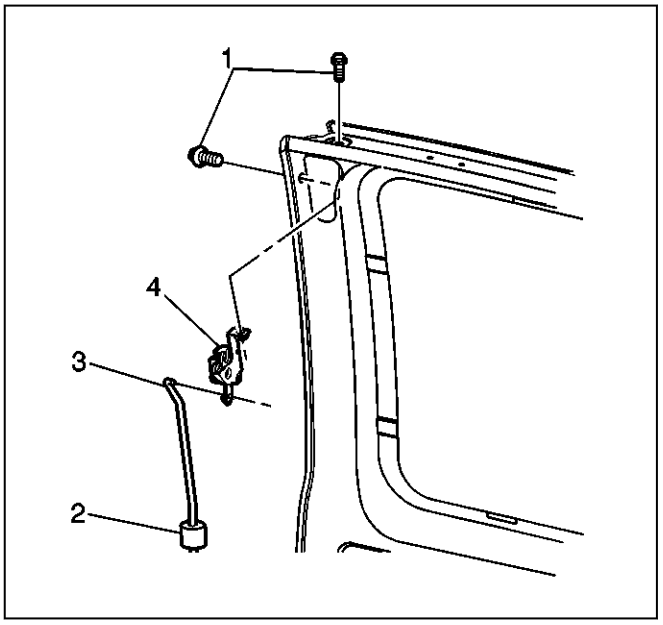

334095

1. Install the left side rear door upper latch (4) to the door.

Caution: Refer to [Link target (target-id 178169-) not found] .

2. Install the 2 bolts (1) in order to retain the left side rear door upper latch (4) to the door and tighten to **25 newtonm (18 lb ft)**.
3. Install the lock rod (3) and bumper (2) to the left side rear door upper latch (4).

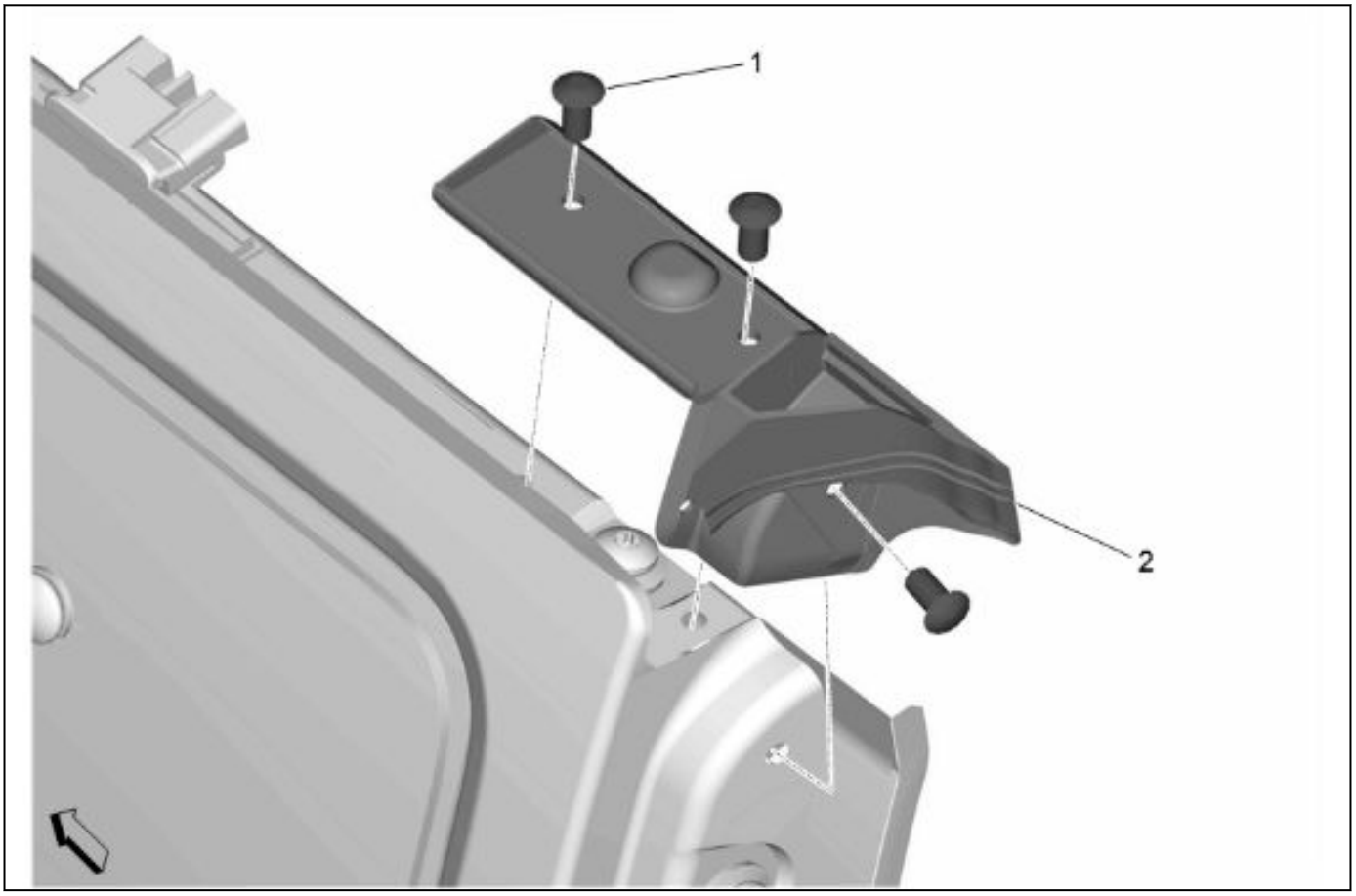

6379526

4. Rear Door Weatherstrip (2) » Install
5. Rear Door Weatherstrip Retainer (1) » Install[3x]
6. Install the left side rear door trim panel. [Link target (target-id 149949-) not found]

Rear Side Door Lock Cylinder Replacement

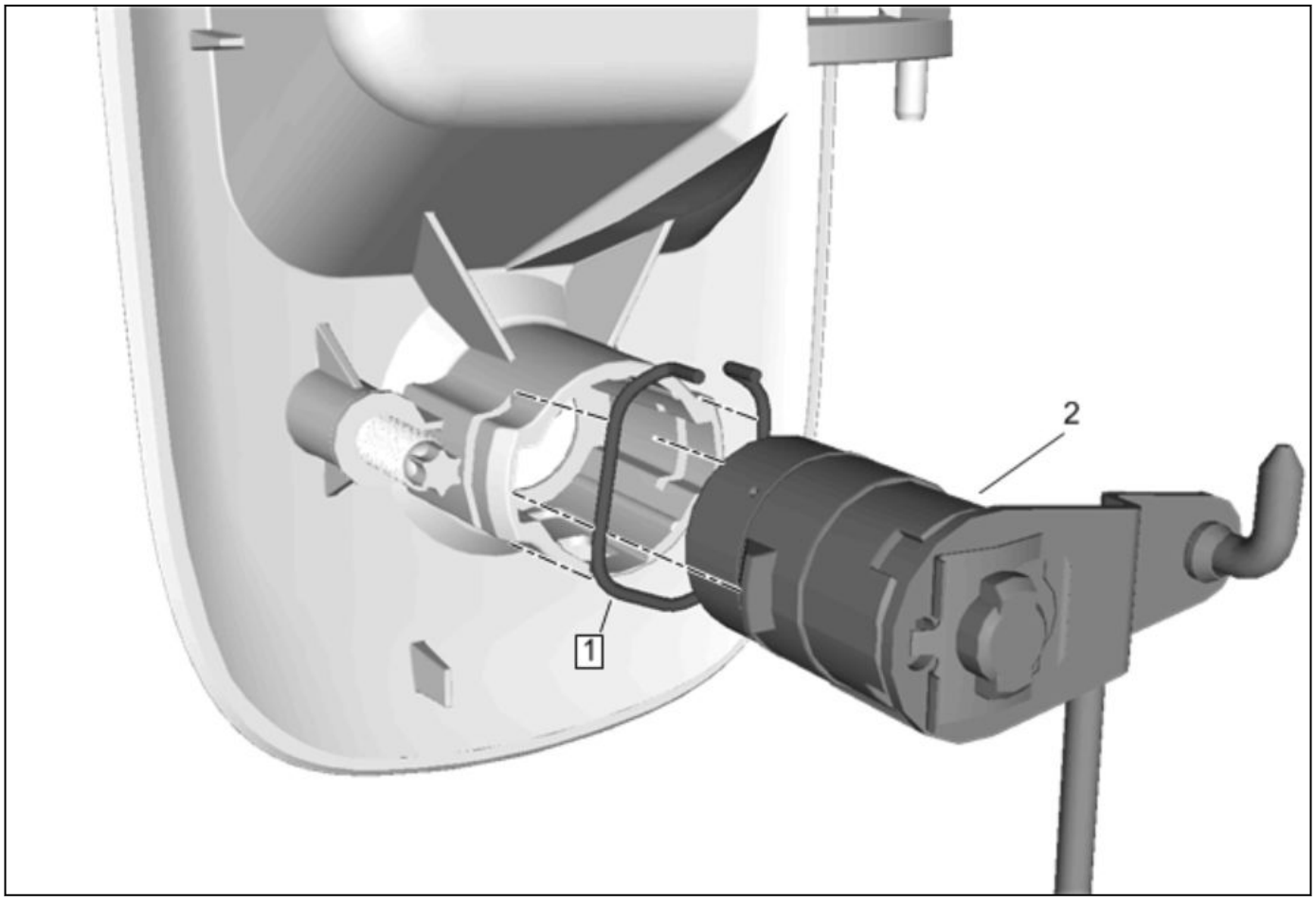

4855007

Rear Side Door Lock Cylinder Replacement

Callout	Component Name
Preliminary Procedure *Sliding Door Outside Handle Replacement 1-123*	
1	Rear Side Door Lock Cylinder Retainer
2	Rear Side Door Lock Cylinder After installation, code the key and lock cylinder, if needed. [Link target (target-id 47833-) not found]

Rear Door Lock Replacement

Removal Procedure

Note: The door ajar switch is contained within the lock of the rear door. Therefore replacement of the lock will include the replacement of the rear door ajar switch.

1. Remove the rear door trim panel. [Link target (target-id 149950-) not found]

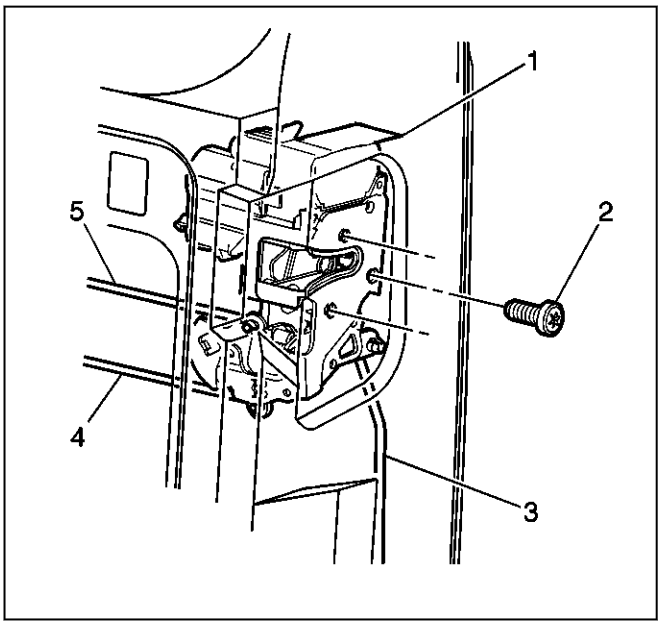

334096

2. Remove the lock rods (3,4,5) from the rear door lock (1).
3. Disconnect the electrical connector from the rear door lock (1).
4. Remove the 3 rear door lock screws (2) that retain the rear door lock (1) to the rear door.
5. Remove the rear door lock (1) from the rear door.
6. Remove the rear door lock (1) from the vehicle.

Installation Procedure

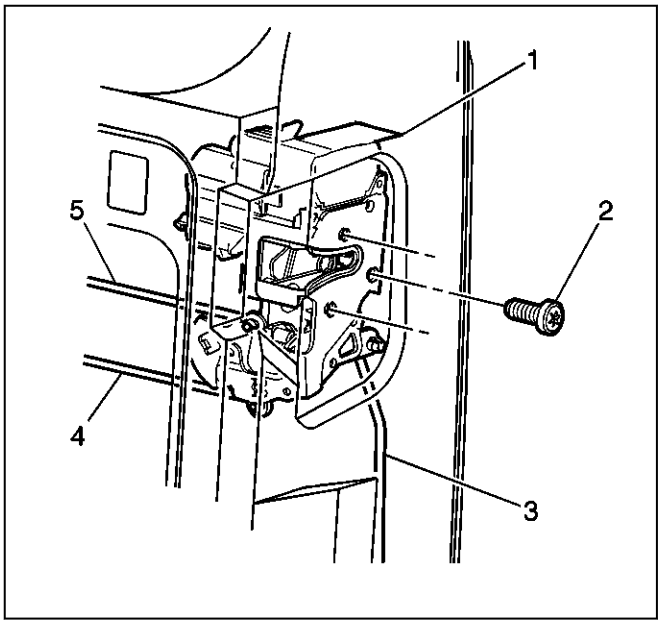

334096

1. Install the rear door lock (1) to the vehicle.
2. Install the rear door lock (1) to the rear door.
3. New and reused threaded components must have adhesive removed and reapplied. Perform the following steps before installation:
   3.1. Loosen the adhesive from the external threads of the components using a nylon wheel/brush and clean with brake cleaner or a similar solvent.
   3.2. Thread the cleaned components into the internal mating threads and remove to loosen trapped cured adhesive.
   3.3. Remove loose debris from internal and external threads using compressed air.
   3.4. Apply liquid thread locking adhesive in a strip along half of the length of the external threads, starting at the tip, just prior to installation.*Adhesives, Fluids, Lubricants, and Sealers 1-95*

Caution: Refer to [Link target (target-id 178169-) not found] .

4. Install the 3 rear door lock screws (2) in order to retain the rear door lock (1) to the rear door and tighten to **10 newtonm (89 lb in)**.
5. Connect the electrical connector to the rear door lock (1).

6. Install the lock rods (3,4,5) to the rear door lock (1).
7. Install the rear door trim panel. [Link target (target-id 149950-) not found]

Intermediate Side Door Lock Replacement

Removal Procedure

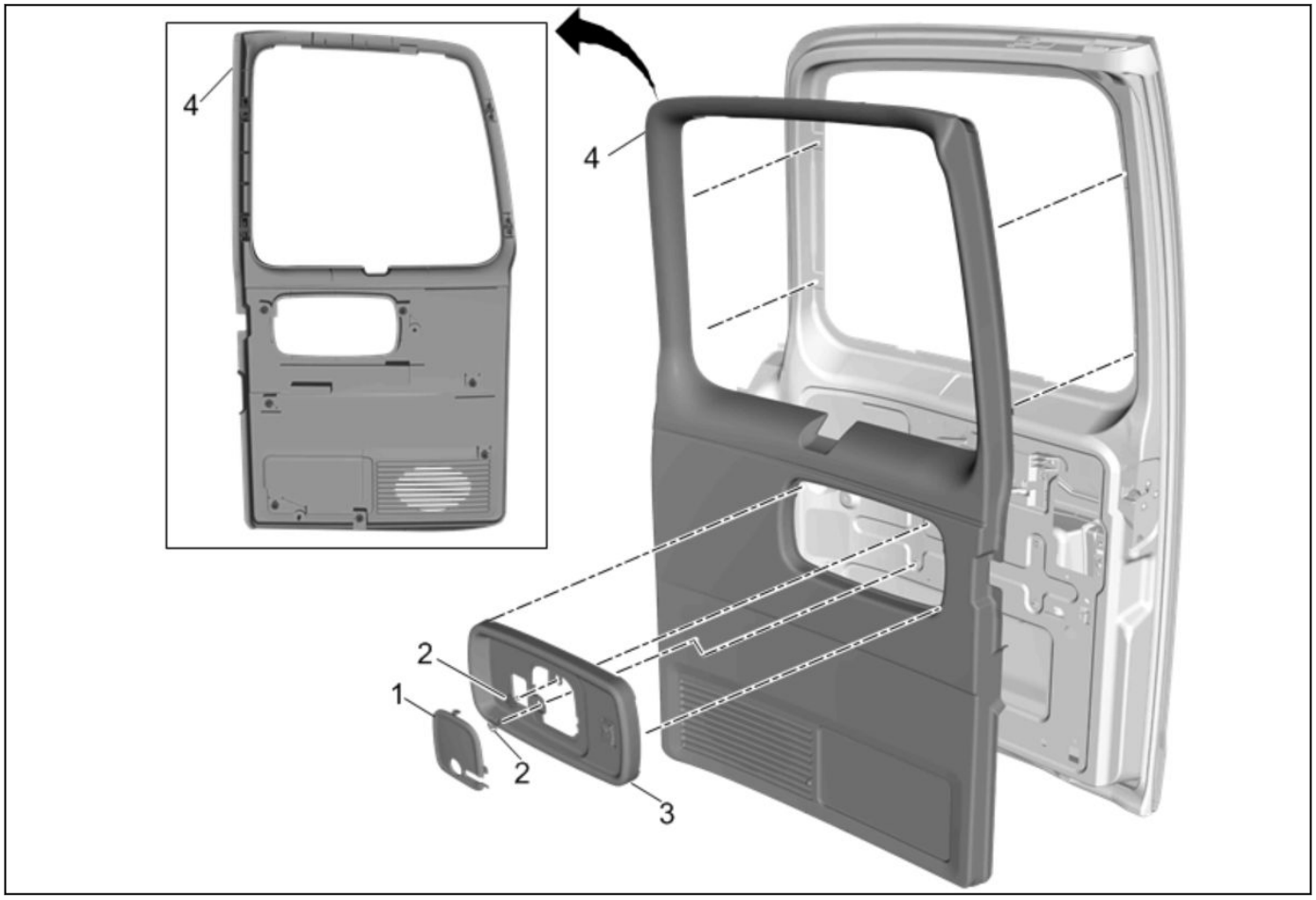

4849411

1. Intermediate Side Door Trim Panel(4) » Remove— [Link target (target-id 214536-) not found]

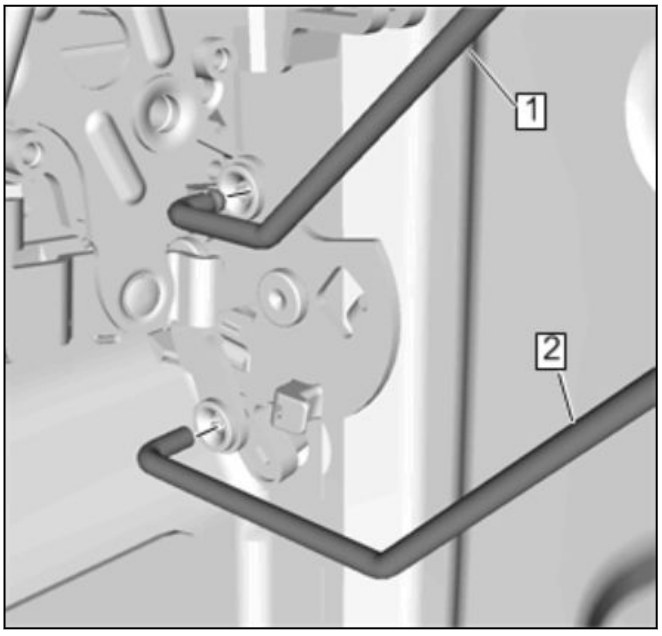

4854999

2. Intermediate Side Door Inside Handle Rod(1) » Remove
3. Intermediate Side Door Locking Rod – Inside(2) » Remove

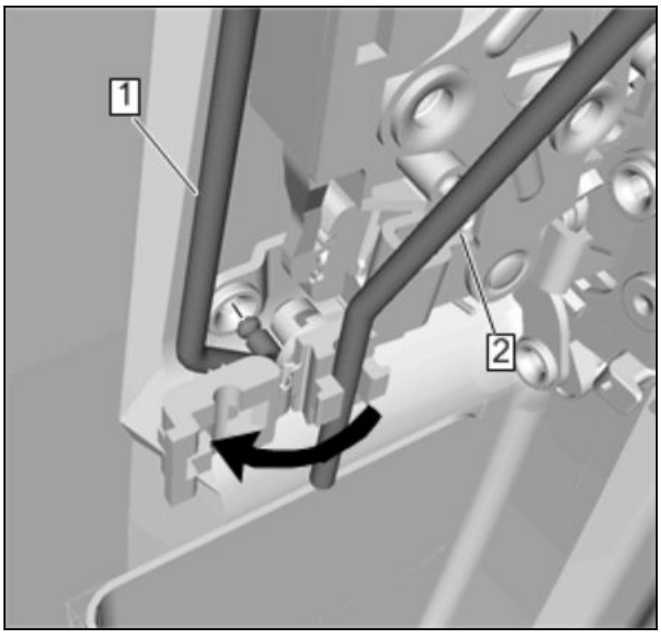

4855004

4. Intermediate Side Door Locking Rod – Outside(1) » Remove
5. Intermediate Side Door Outside Handle Rod (2) » Remove

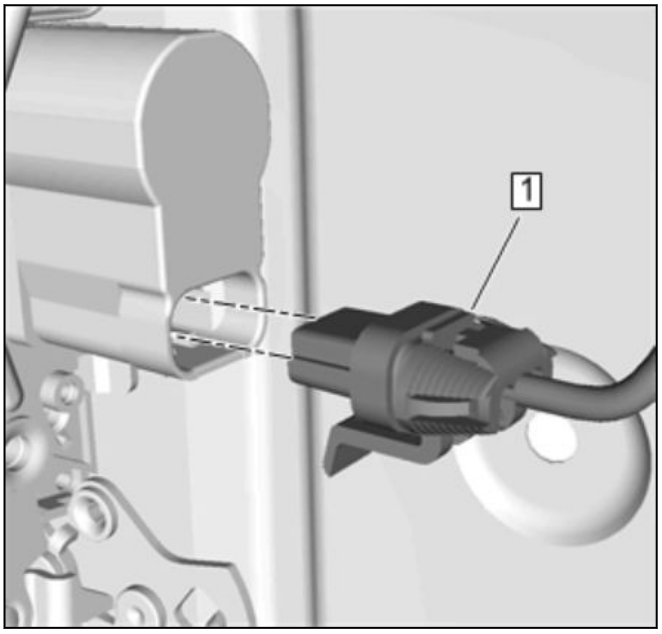

4855005

6. Intermediate Side Door Wiring Harness(1) » Remove

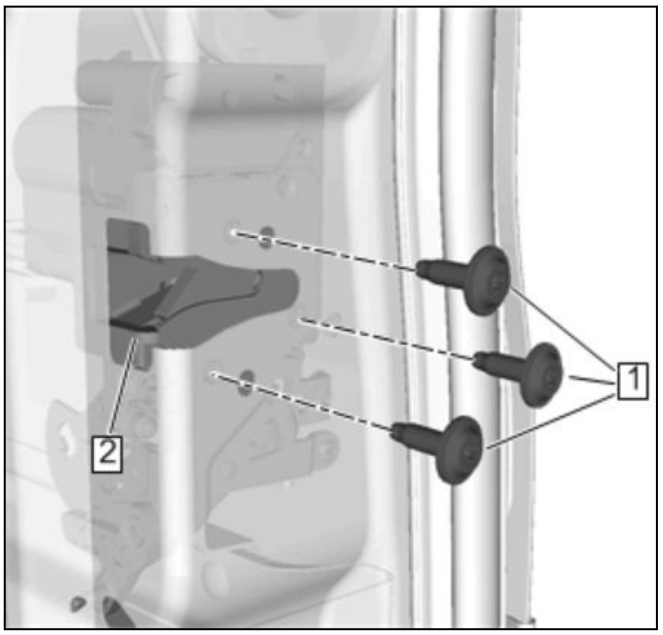

4855002

7. Rear Side Door Latch Bolt (1) » Remove[3x]
8. Intermediate Side Door Lock (2) » Remove

Installation Procedure

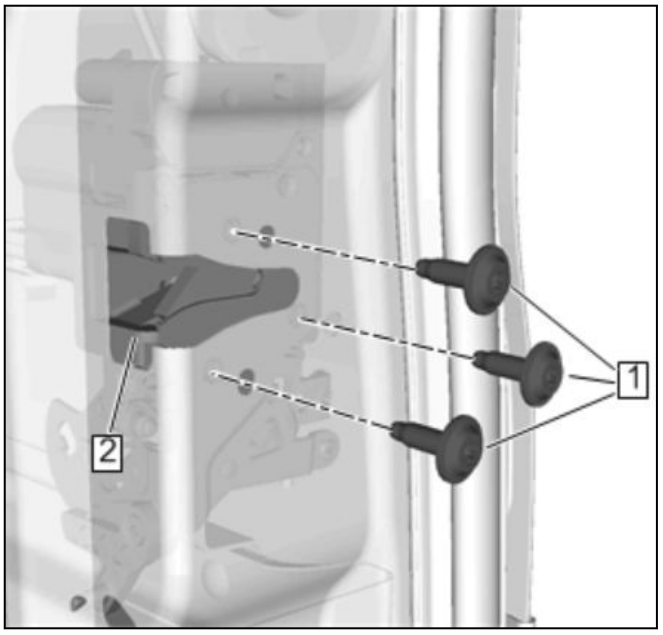

4855002

1. Intermediate Side Door Lock (2) » Install

Caution: Refer to [Link target (target-id 178169-) not found] .

2. Rear Side Door Latch Bolt (1) » Install and tighten[3x] **10 newtonm (88 lb in)**

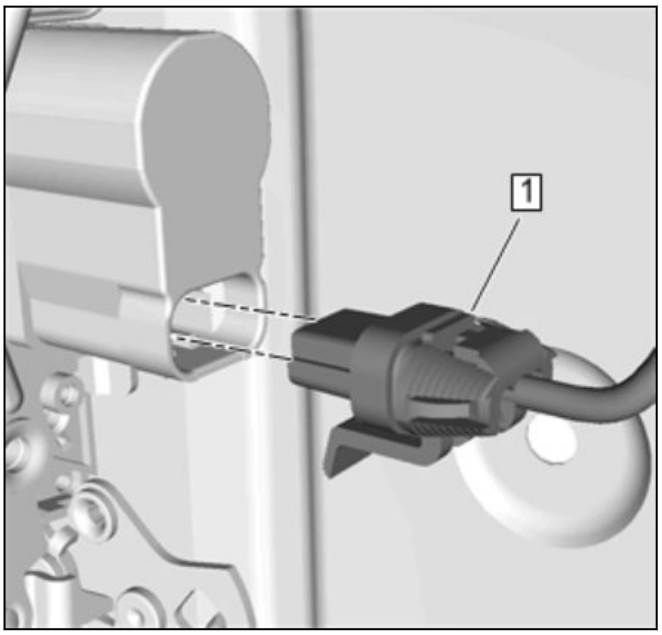

4855005

3. Intermediate Side Door Wiring Harness(1) » Install

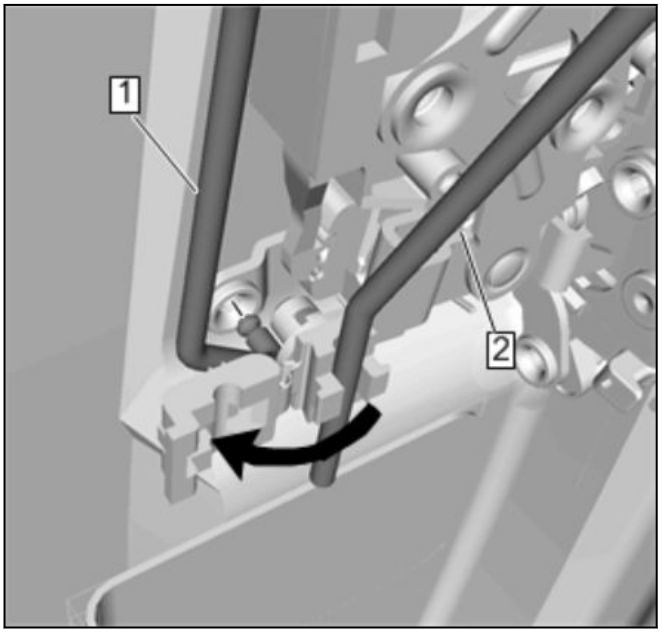

4855004

4. Intermediate Side Door Locking Rod – Outside(1) » Install
5. Intermediate Side Door Outside Handle Rod (2) » Install

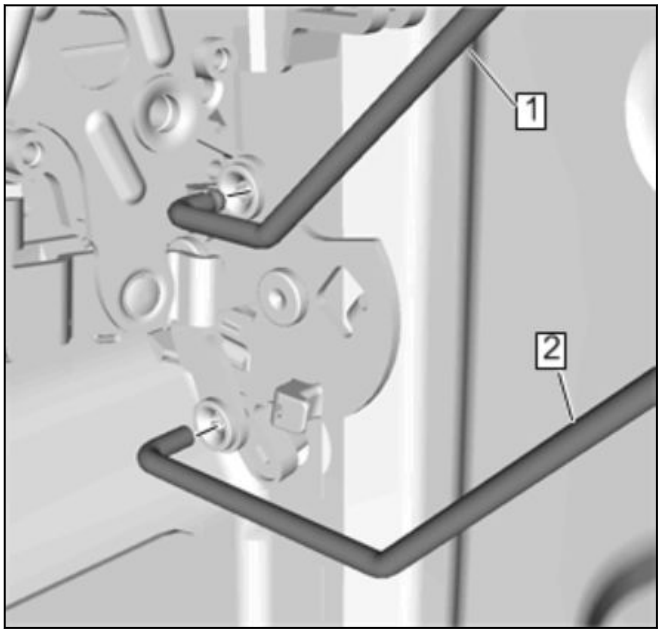

4854999

6. Intermediate Side Door Inside Handle Rod(1) » Install
7. Intermediate Side Door Locking Rod – Inside(2) » Install

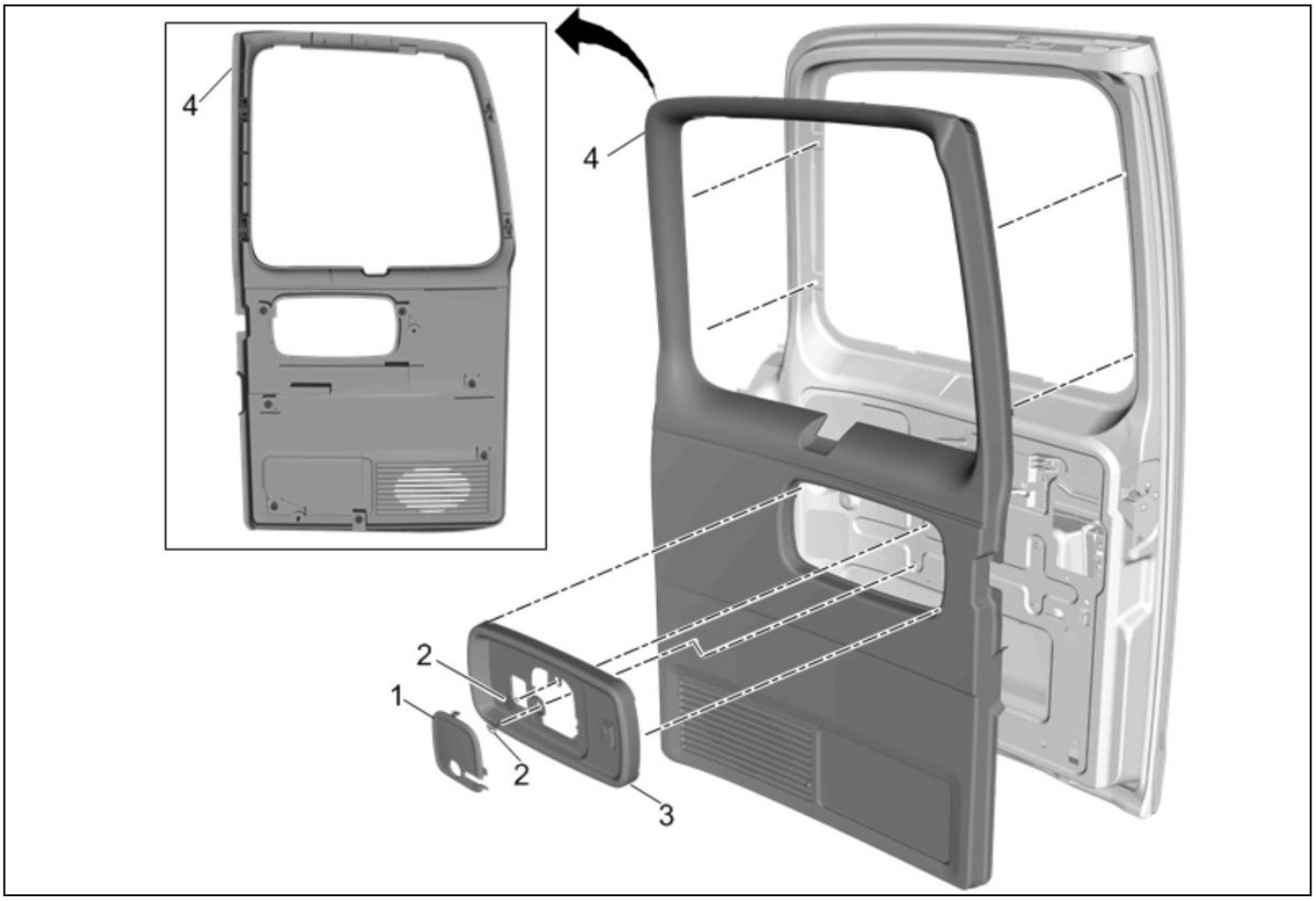

4849411

8. Intermediate Side Door Trim Panel(4) » Install— [Link target (target-id 214536-) not found]

Front Side Door Lock Replacement

Removal Procedure

1. Front Side Door Window Channel Replacement - Lower Rear » Remove— *Front Side Door Window Channel Replacement - Lower Rear 1-38*
2. Front Side Door Lock Cylinder Rod » Remove

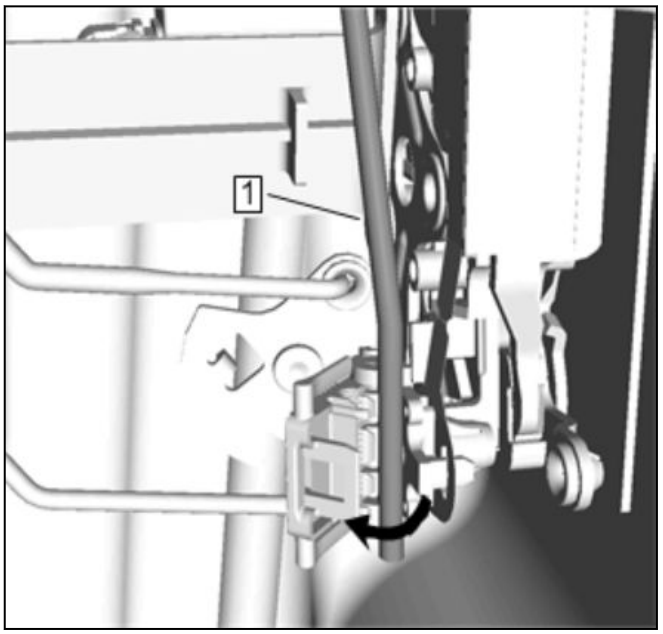

4850148

3. Front Side Door Outside Handle Rod (1) » Remove

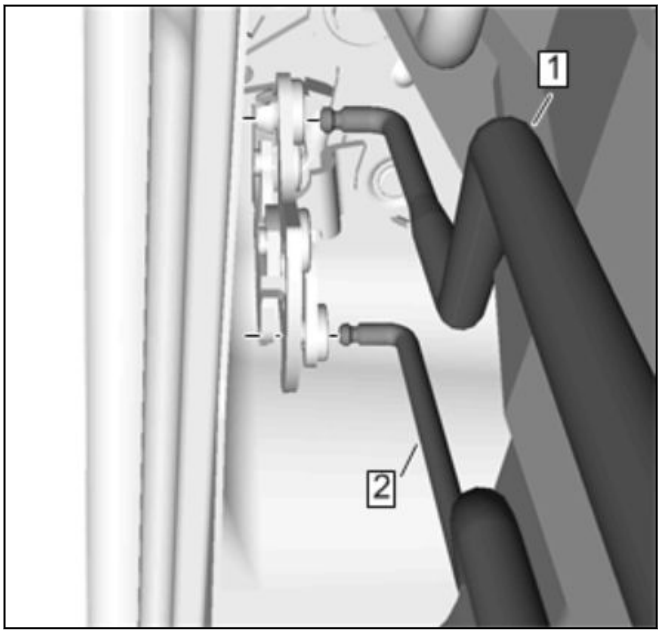

4850152

4. Front Side Door Inside Handle Rod (1) » Remove
5. Front Side Door Lock Rod (2) » Remove

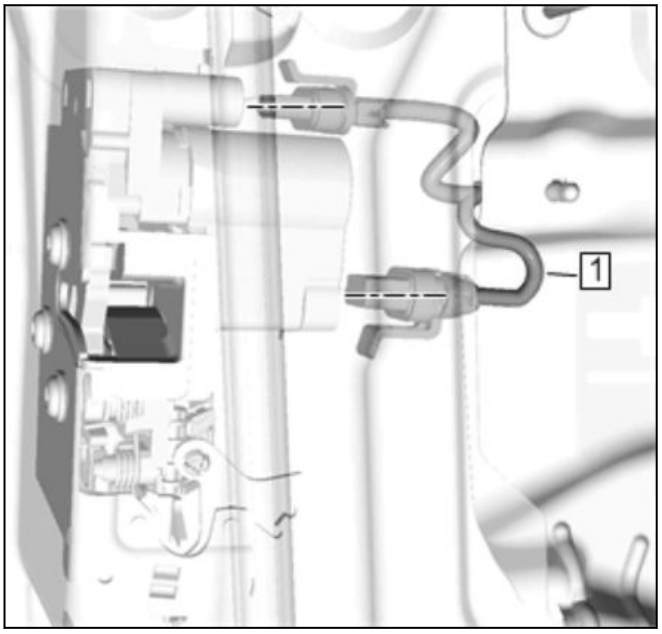

4850153

6. Front Side Door Wiring Harness (1) » Remove

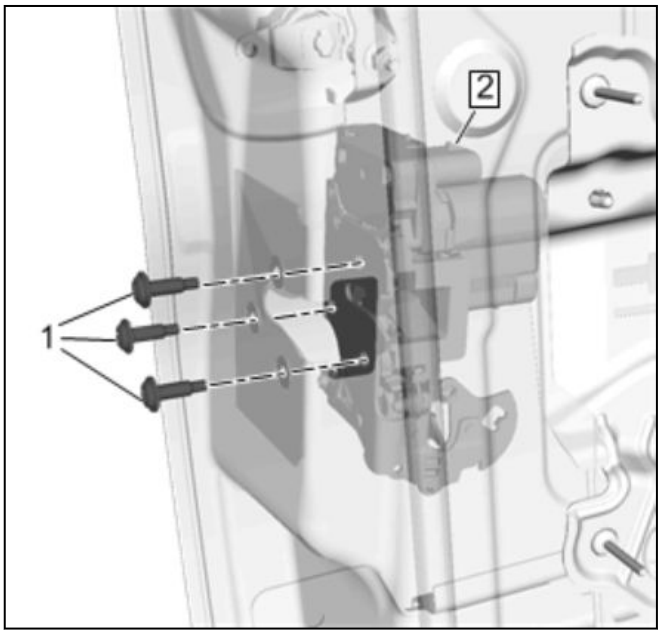

4850154

7. Front Side Door Latch Bolt (1) » Remove

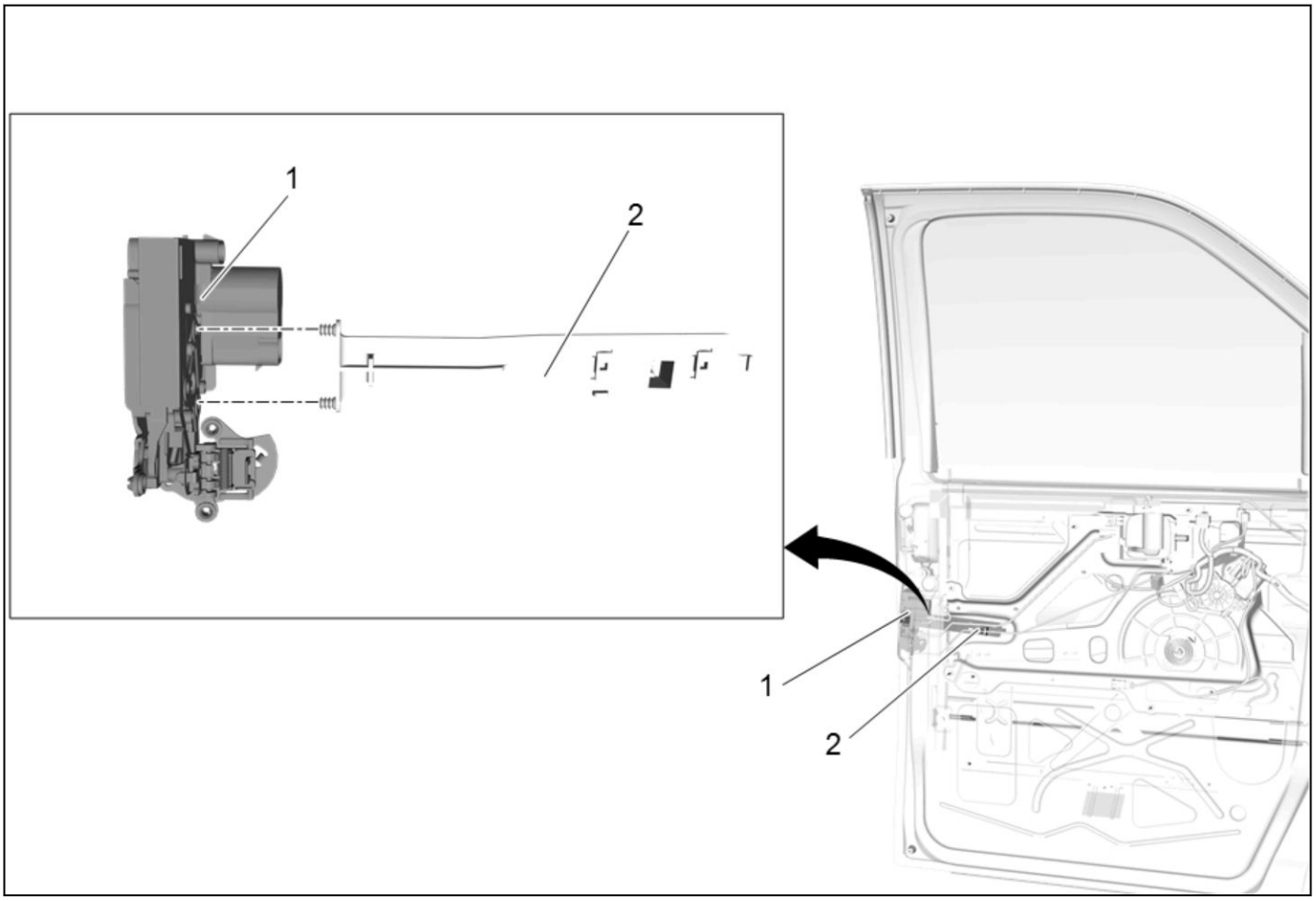

5193260

8. Remove the front side door latch (1) from the front side door window module support bracket (2).

Installation Procedure

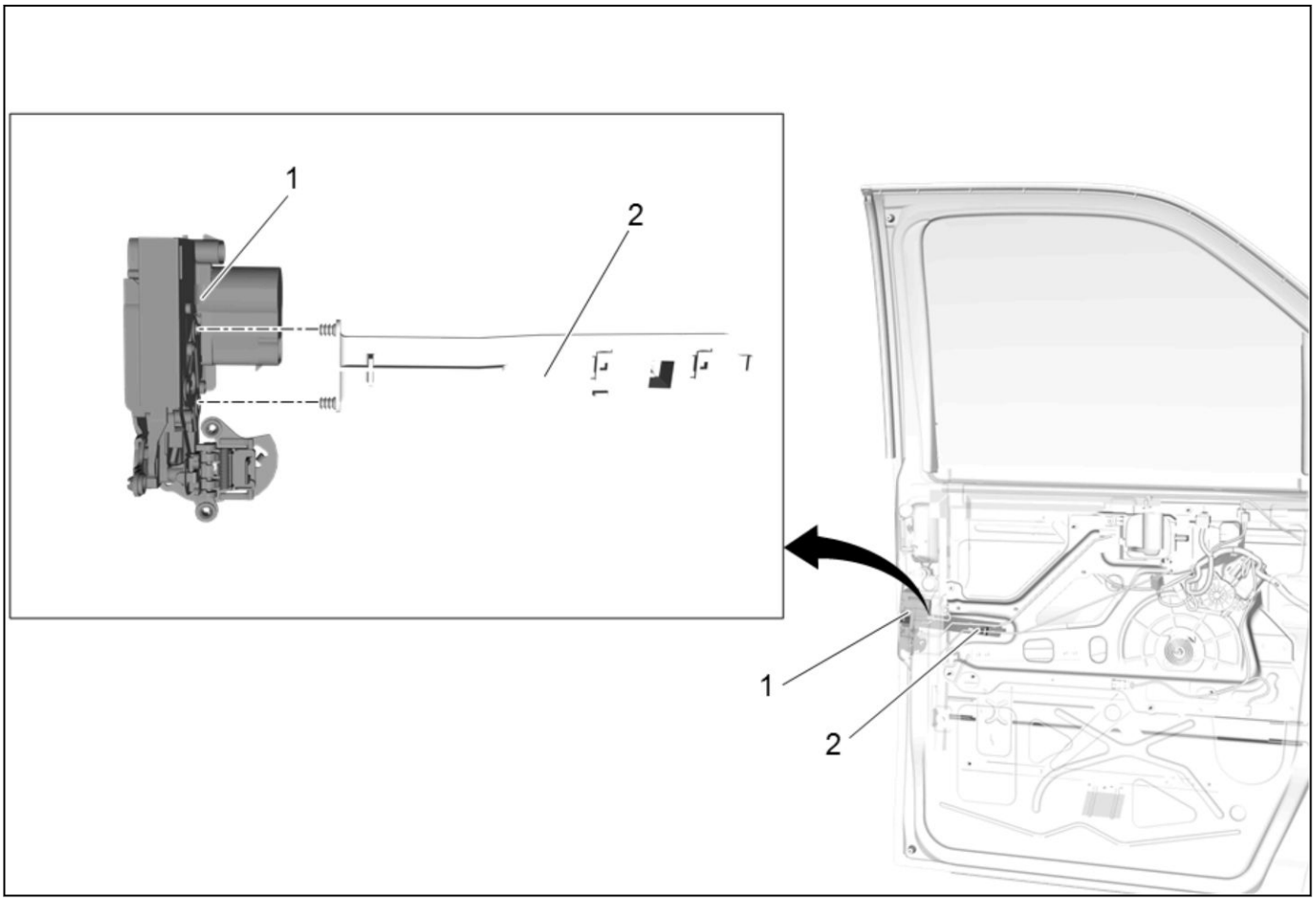

5193260

1. Install the front side door latch (1) to the front side door window module support bracket (2).

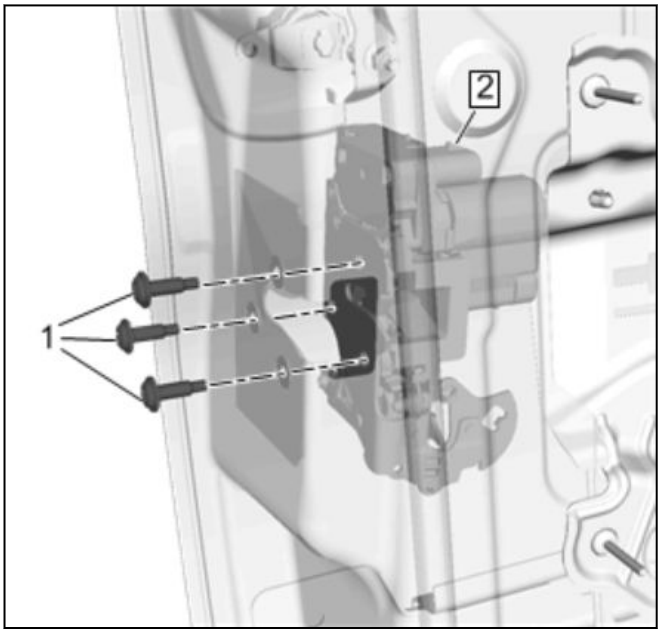

4850154

2. Front Side Door Latch (2) » Install

3. New and reused threaded components must have adhesive removed and reapplied. Perform the following steps before installation:
   3.1. Loosen the adhesive from the external threads of the components using a nylon wheel/brush and clean with brake cleaner or a similar solvent.
   3.2. Thread the cleaned components into the internal mating threads and remove to loosen trapped cured adhesive.
   3.3. Remove loose debris from internal and external threads using compressed air.
   3.4. Apply liquid thread locking adhesive in a strip along half of the length of the external threads, starting at the tip, just prior to installation.*Adhesives, Fluids, Lubricants, and Sealers 1-95*

Caution: Refer to [Link target (target-id 178169-) not found] .

4. Front Side Door Latch Bolt (1) » Install and tighten**10 newtonm (89 lb in)**

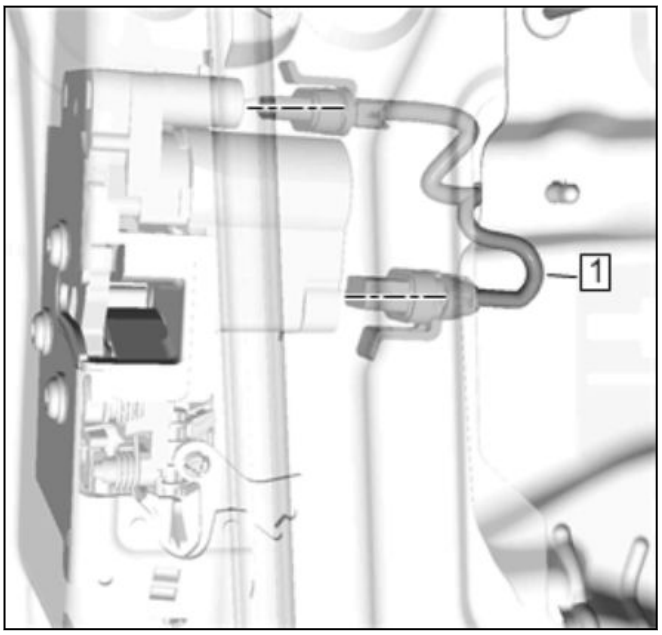

4850153

5. Front Side Door Wiring Harness (1) » Install

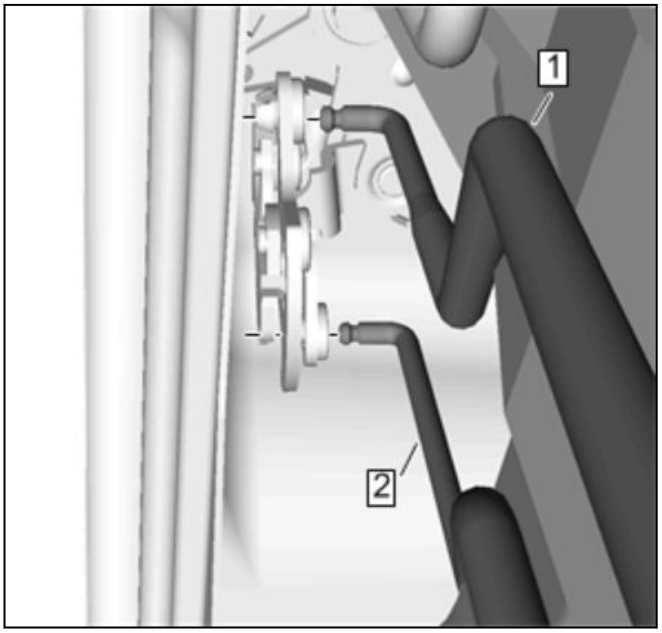

4850152

6. Front Side Door Inside Handle Rod (1) » Install
7. Front Side Door Lock Rod (2) » Install

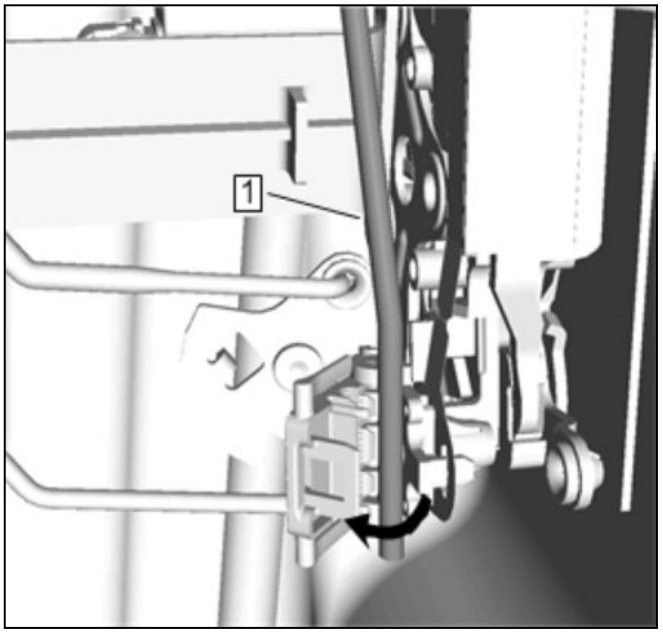

4850148

8. Front Side Door Outside Handle Rod (1) » Install
9. Front Side Door Lock Cylinder Rod » Install
10. Front Side Door Window Channel Replacement - Lower Rear » Install— *Front Side Door Window Channel Replacement - Lower Rear 1-38*

Sliding Door Rear Lock Replacement

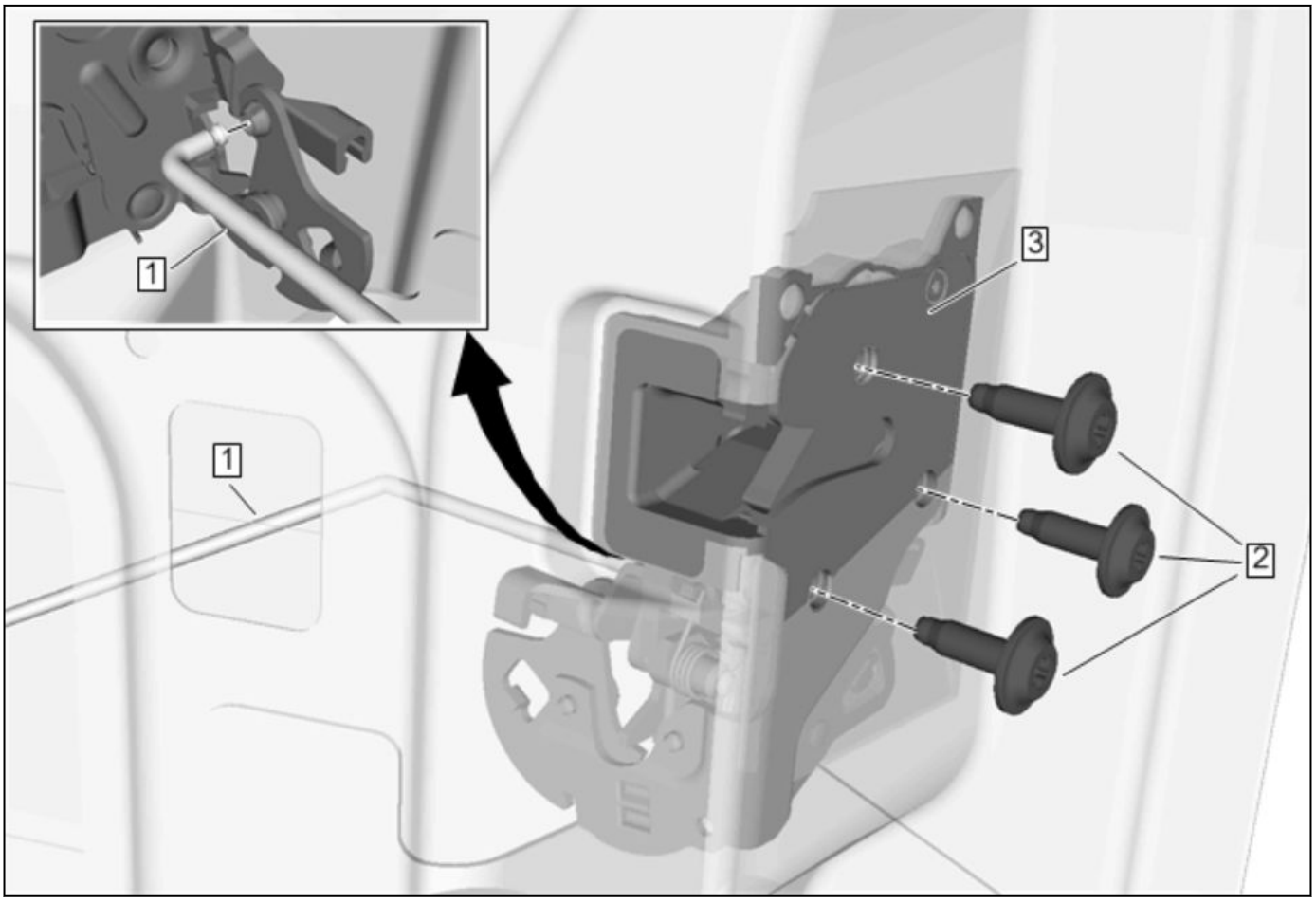

4867317

Sliding Door Rear Lock Replacement

Callout	Component Name
Preliminary Procedure [Link target (target-id 149956-) not found]	
1	Rear Side Door Latch Rod
2	Rear Side Door Latch Bolt [3x] **Caution:** Refer to [Link target (target-id 178169-) not found] . **Tighten** 10 newtonm (88 lb in)
3	Sliding Door Rear Lock

Door Lock Harness Contact Replacement

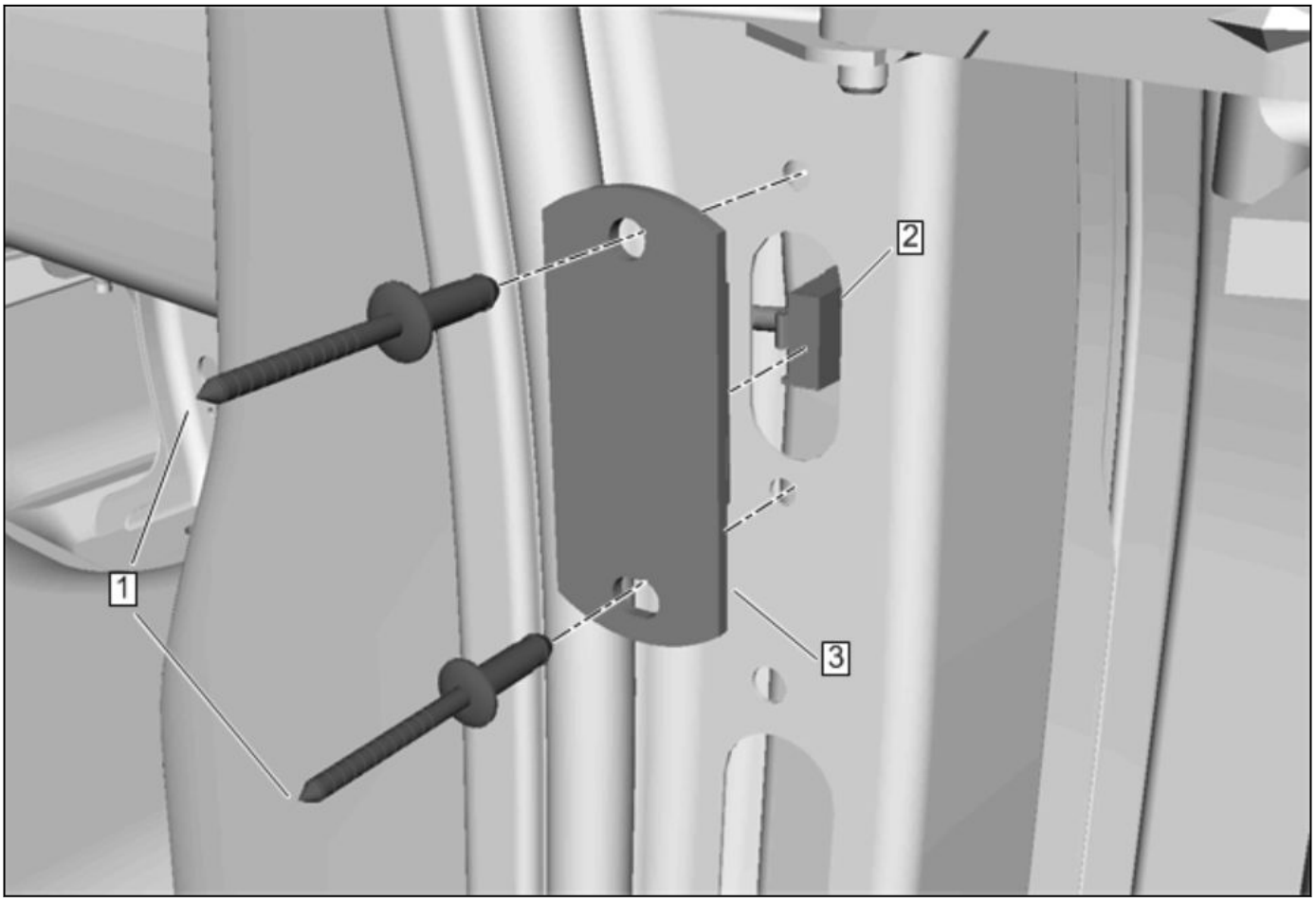

4855012

Door Lock Harness Contact Replacement

Callout	Component Name
1	Door Lock Harness Contact Rivet [2x] **Caution:** Refer to [Link target (target-id 178036-) not found] .
2	Door Lock Harness
3	Door Lock Harness Contact

Body Side Upper Front and Rear Access Panel Strut Replacement

Removal Procedure

Warning: When a hood hold open device is being removed or installed, provide alternate support to avoid the possibility of damage to the vehicle or personal injury.

Caution: Refer to [Link target (target-id 178196-) not found] .

1. Open and support the cargo door.

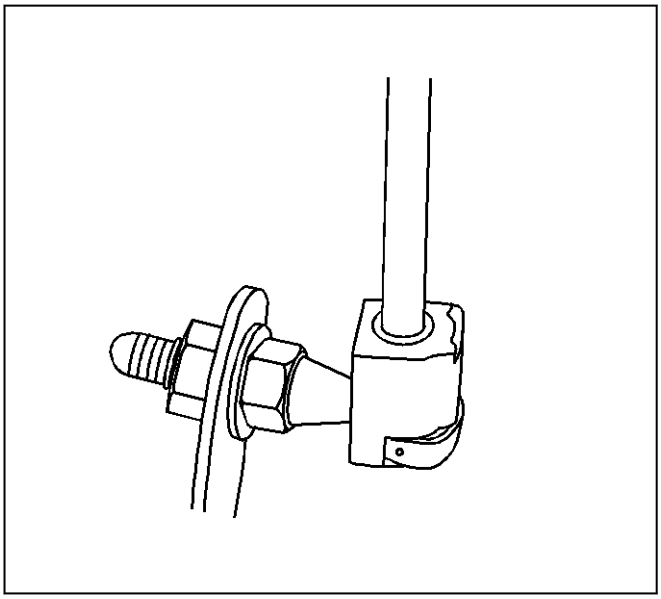

824867

2. Using a flat-bladed tool pry the retainer clip away from the ball stud socket.

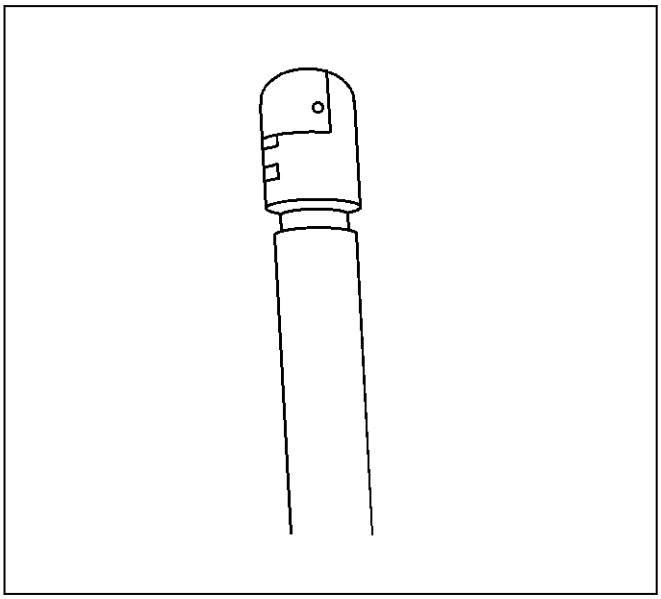

824873

3. Remove the upper end of the assist rods from the ball stud.

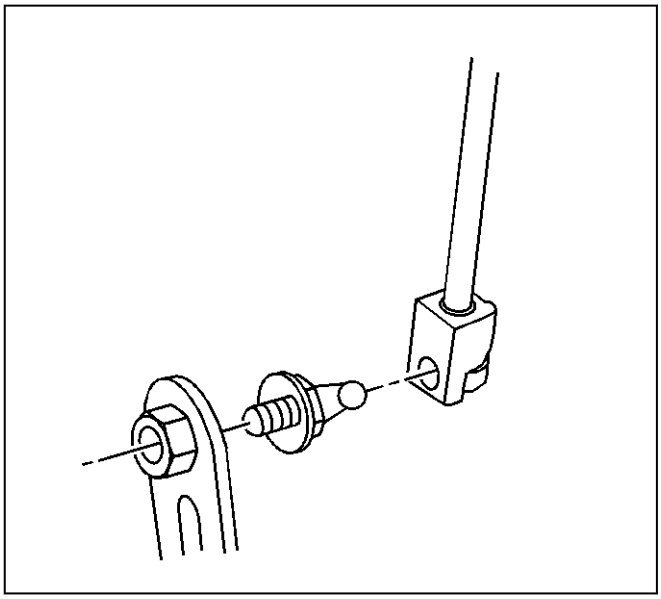

824869

4. Remove the lower end of the assist rods from the ball stud.
5. Remove the assist rods from the cargo door.

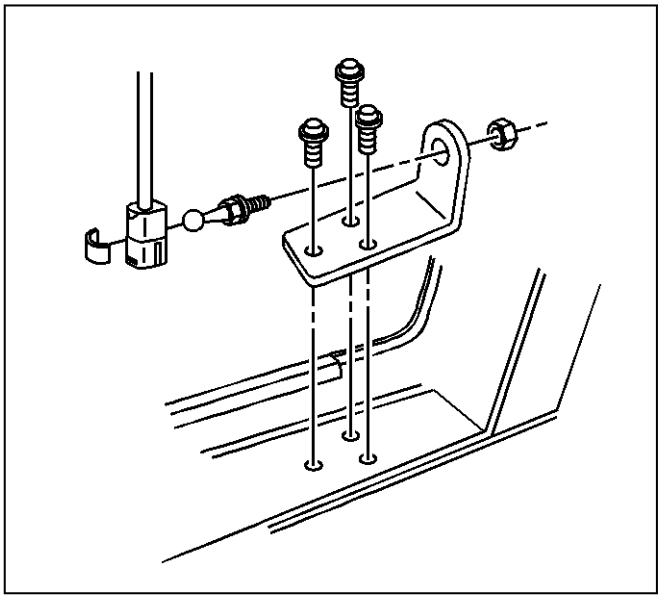

834702

6. Remove ball stud bolts.
7. Remove ball stud bracket.

Installation Procedure

1. Position the assist rods to the cargo door.

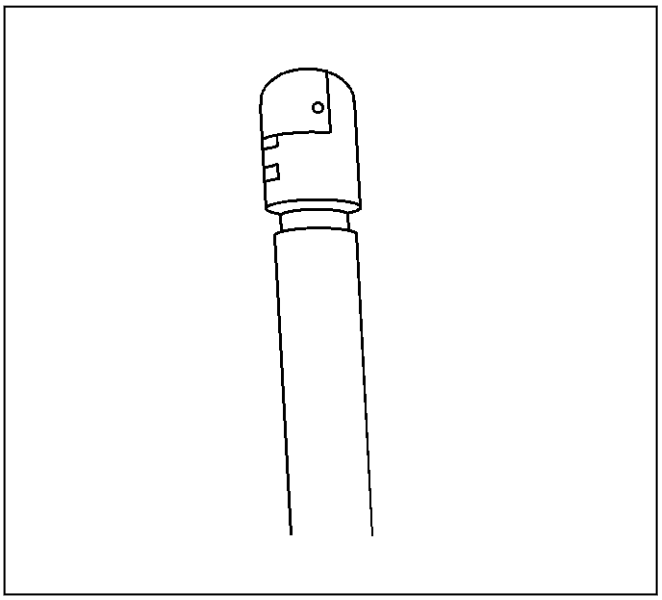

824873

2. Install the upper end of the assist rods to the ball stud. Press in to place until fully seated.

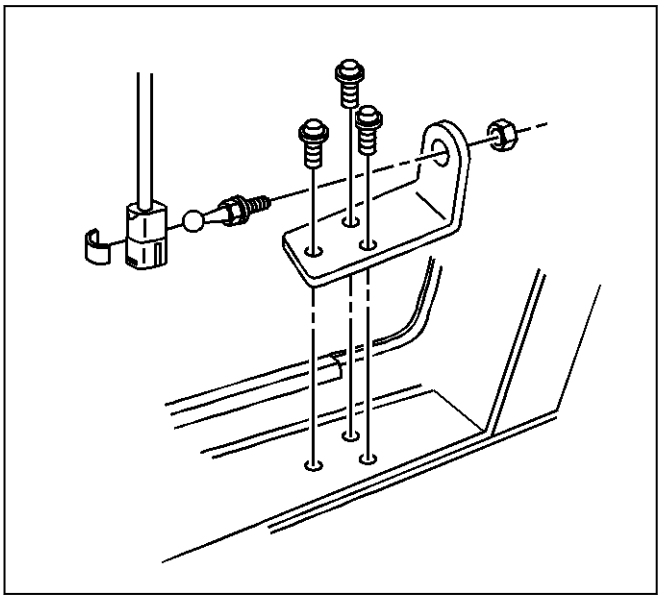

834702

3. Install ball stud bracket.

Caution: Refer to [Link target (target-id 178169-) not found] .

4. Install ball stud bolts and tighten to **20 newtonm (15 lb ft)**.

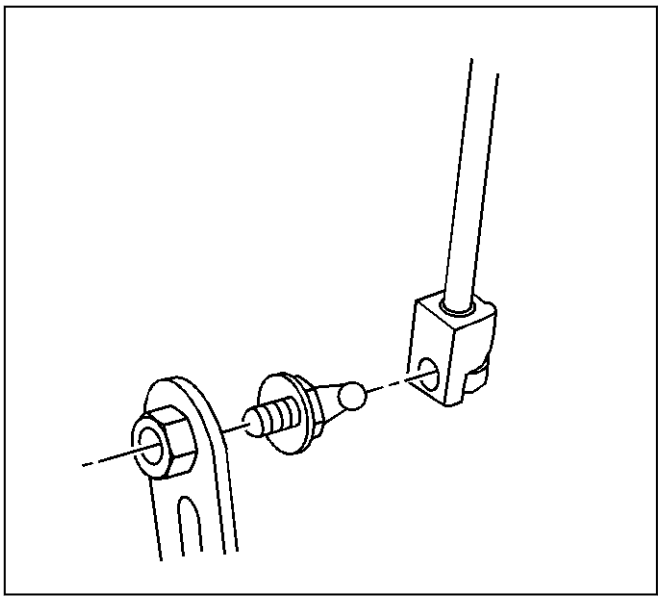

824869

5. Install the lower end of the assist rods to the ball stud. Press in to place until fully seated.
6. Remove the support from the cargo door.
7. Close the cargo door.

Intermediate Side Door Lower Hook Striker Replacement

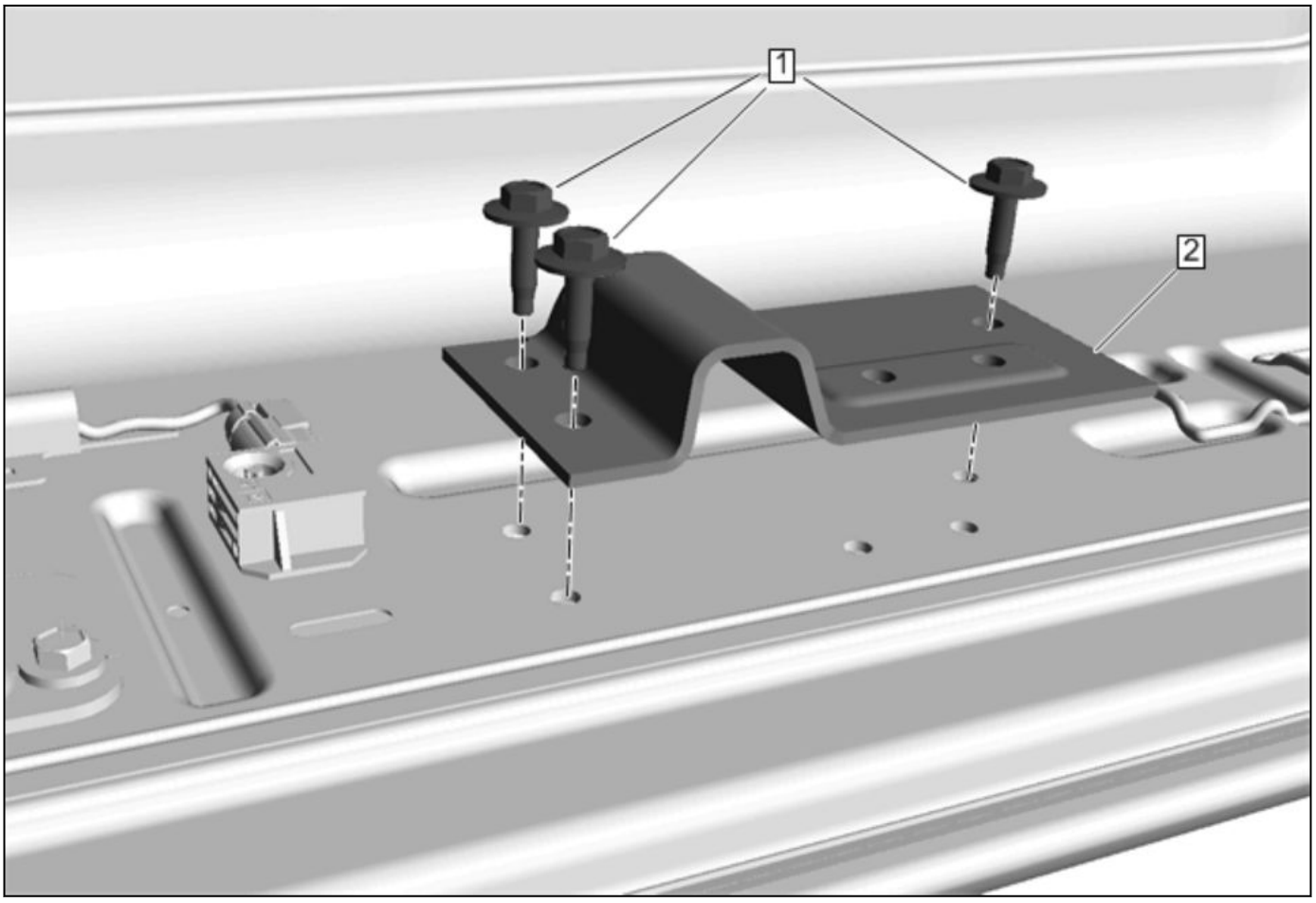

4855011

Intermediate Side Door Lower Hook Striker Replacement

Callout	Component Name
Preliminary Procedures 1. [Link target (target-id 299055-) not found] 2. [Link target (target-id 148376-) not found]	
1	Intermediate Side Door Lower Hook Striker Bolt [3x] **Caution:** Refer to [Link target (target-id 178169-) not found] . **Tighten** 10 newtonm (88 lb in)
2	Intermediate Side Door Lower Hook Striker

Door Striker Replacement (Cargo Door)

Removal Procedure

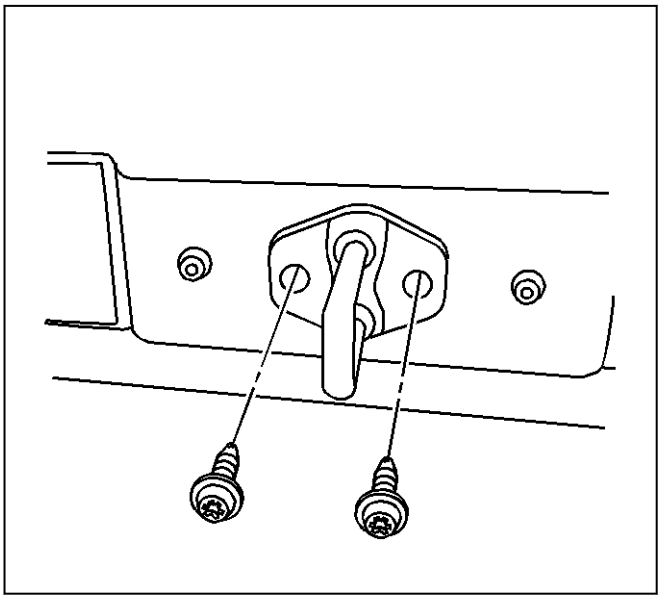

834701

1. Remove the bolts that retain the door lock striker to the door opening.
2. Remove the door lock striker from the door opening.

Installation Procedure

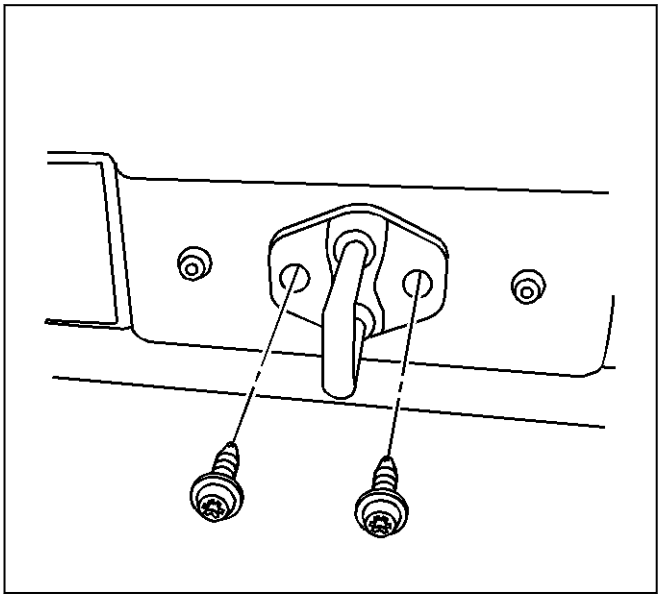

834701

1. Install the door lock striker to the door opening.

Caution: Refer to [Link target (target-id 178169-) not found] .

2. Install the bolts in order to retain the door lock striker to the door opening and tighten to **10 newtonm (89 lb in)**.

Door Striker Replacement (Front Door)

Removal Procedure

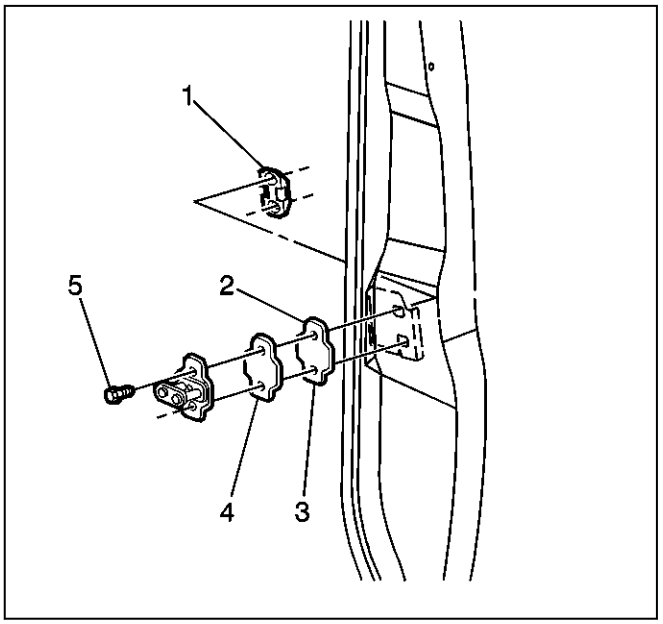

333950

1. Remove the bolts (5) that retain the door lock striker (4) to the door opening.
2. Remove the door lock striker (4) from the door opening.

Installation Procedure

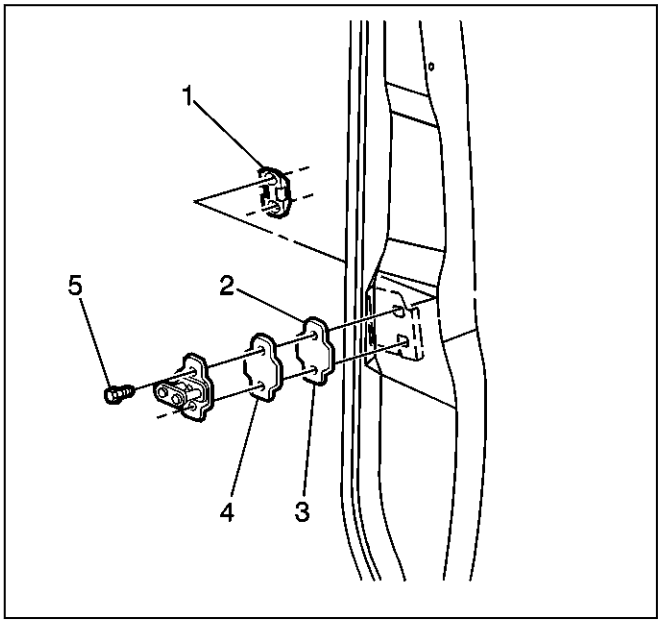

333950

1. Install the door lock striker (4) to the door opening.

Caution: Refer to [Link target (target-id 178169-) not found] .

2. Install the bolts (5) in order to retain the door lock striker (4) to the door opening and tighten to **10 newtonm (89 lb in)**.

Front Side Door Lock Striker Replacement (Cargo)

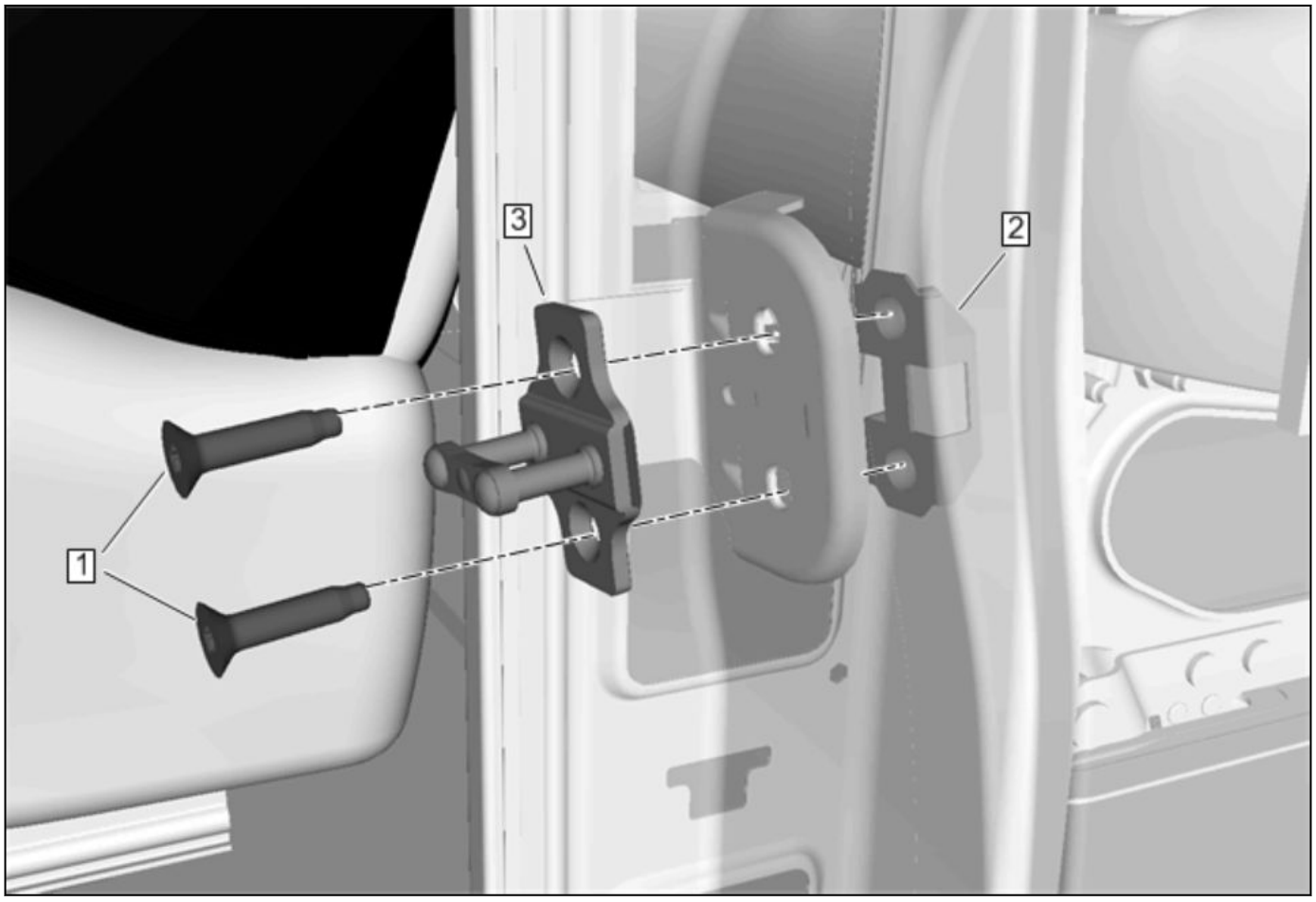

4850875

Front Side Door Lock Striker Replacement (Cargo)

Callout	Component Name
Preliminary Procedure [Link target (target-id 51648-) not found]	
1	Front Side Door Latch Striker Bolt [2x] **Caution:** Refer to [Link target (target-id 178169-) not found] . **Tighten** 24 newtonm (17 lb ft)
2	Front Side Door Lock Striker Anchor Plate
3	Front Side Door Lock Striker

Front Side Door Lock Striker Replacement (Passenger)

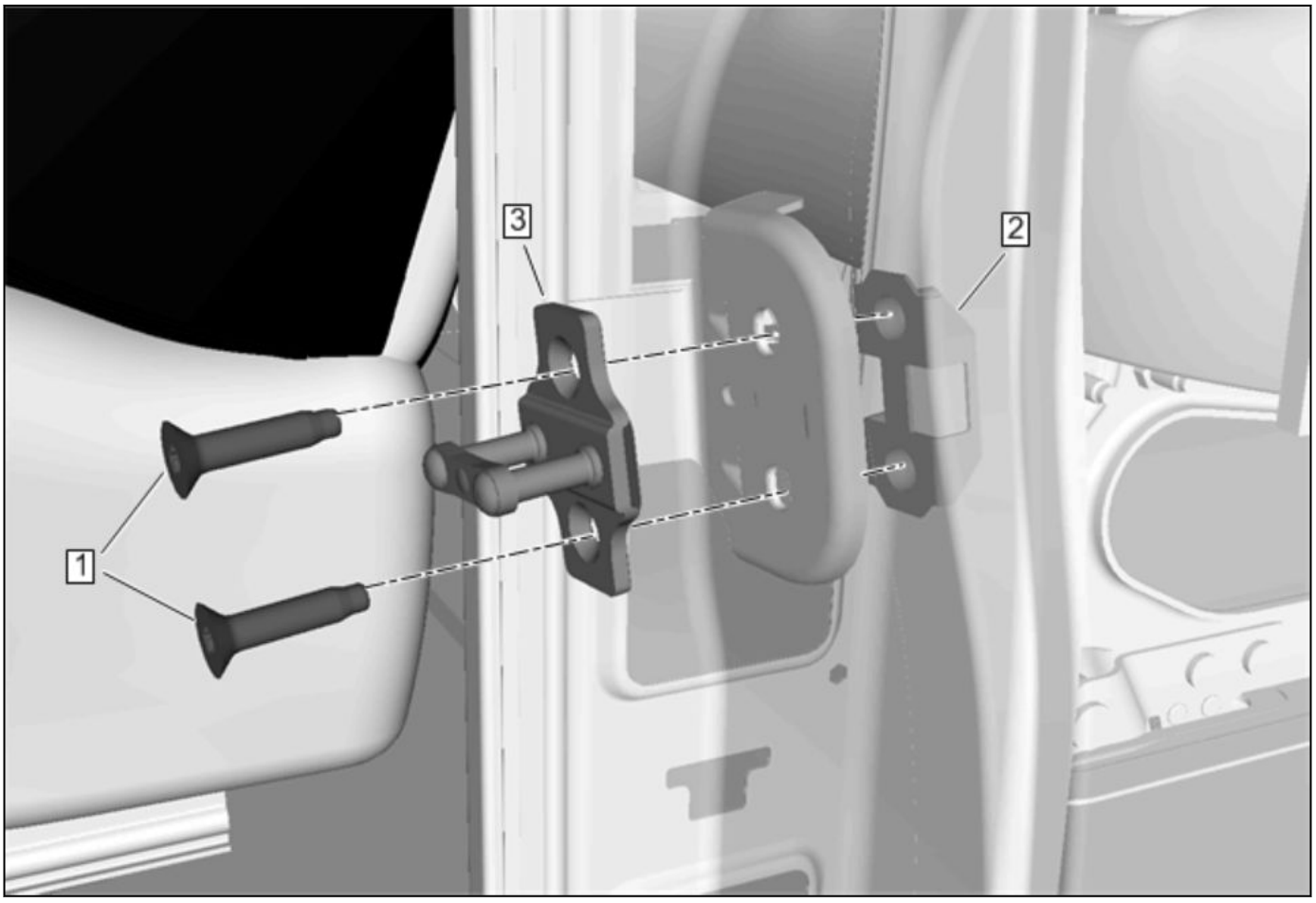

4850875

Front Side Door Lock Striker Replacement (Passenger)

Callout	Component Name
Preliminary Procedure [Link target (target-id 51619-) not found]	
1	Front Side Door Latch Striker Bolt [2x] **Caution:** Refer to [Link target (target-id 178169-) not found] . **Tighten** 24 newtonm (17 lb ft)
2	Front Side Door Lock Striker Anchor Plate
3	Front Side Door Lock Striker

Lock Striker Replacement - Lower

Removal Procedure

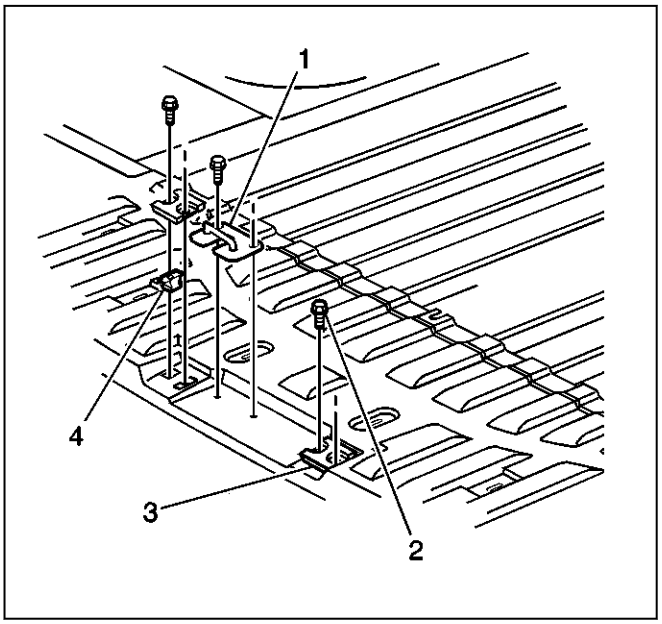

334090

1. Remove the bolts (2) that retain the rear door lower striker (1) to the floor panel.
2. Remove the rear door lower striker (1) from the floor panel.

Installation Procedure

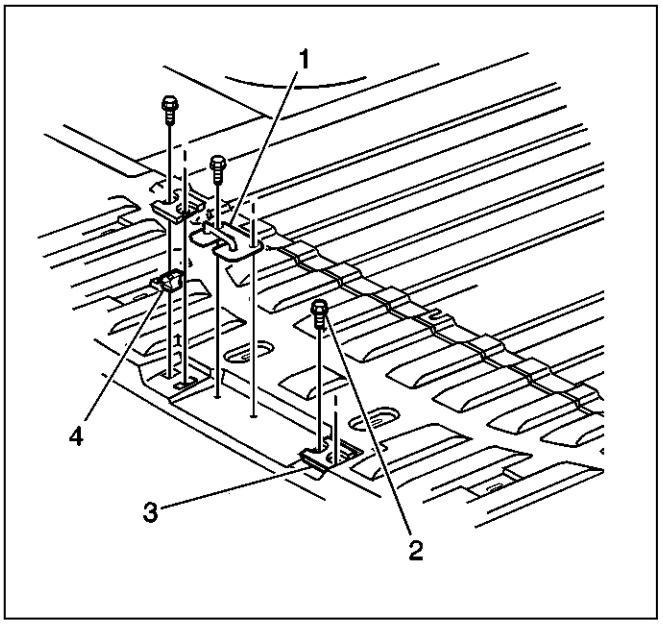

334090

1. Install the rear door lower striker (1) to the floor panel.

Caution: Refer to [Link target (target-id 178169-) not found] .

2. Install the rear door lower striker bolts in order to retain the rear door lower striker (1) to the floor panel and tighten to **10 newtonm (89 lb in)**.

Rear Side Door Latch Striker Replacement (Cargo Door)

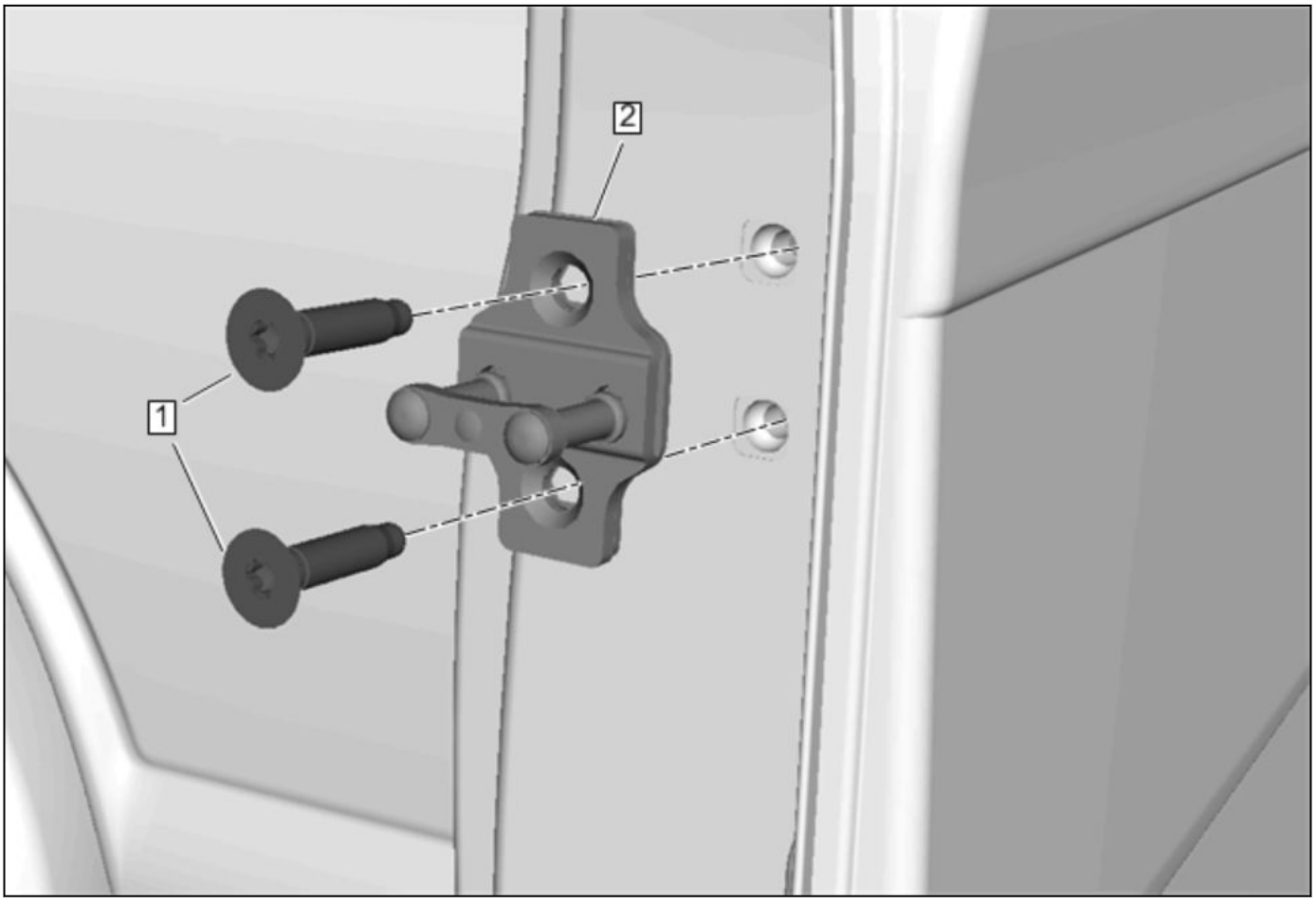

4855008

Rear Side Door Latch Striker Replacement (Cargo Door)

Callout	Component Name
1	Rear Side Door Lock Striker Bolt [2x] **Caution:** Refer to [Link target (target-id 178169-) not found] . **Tighten** 24 newtonm (17 lb ft)
2	Rear Side Door Latch Striker

Rear Side Door Latch Striker Replacement (Sliding Door Front)

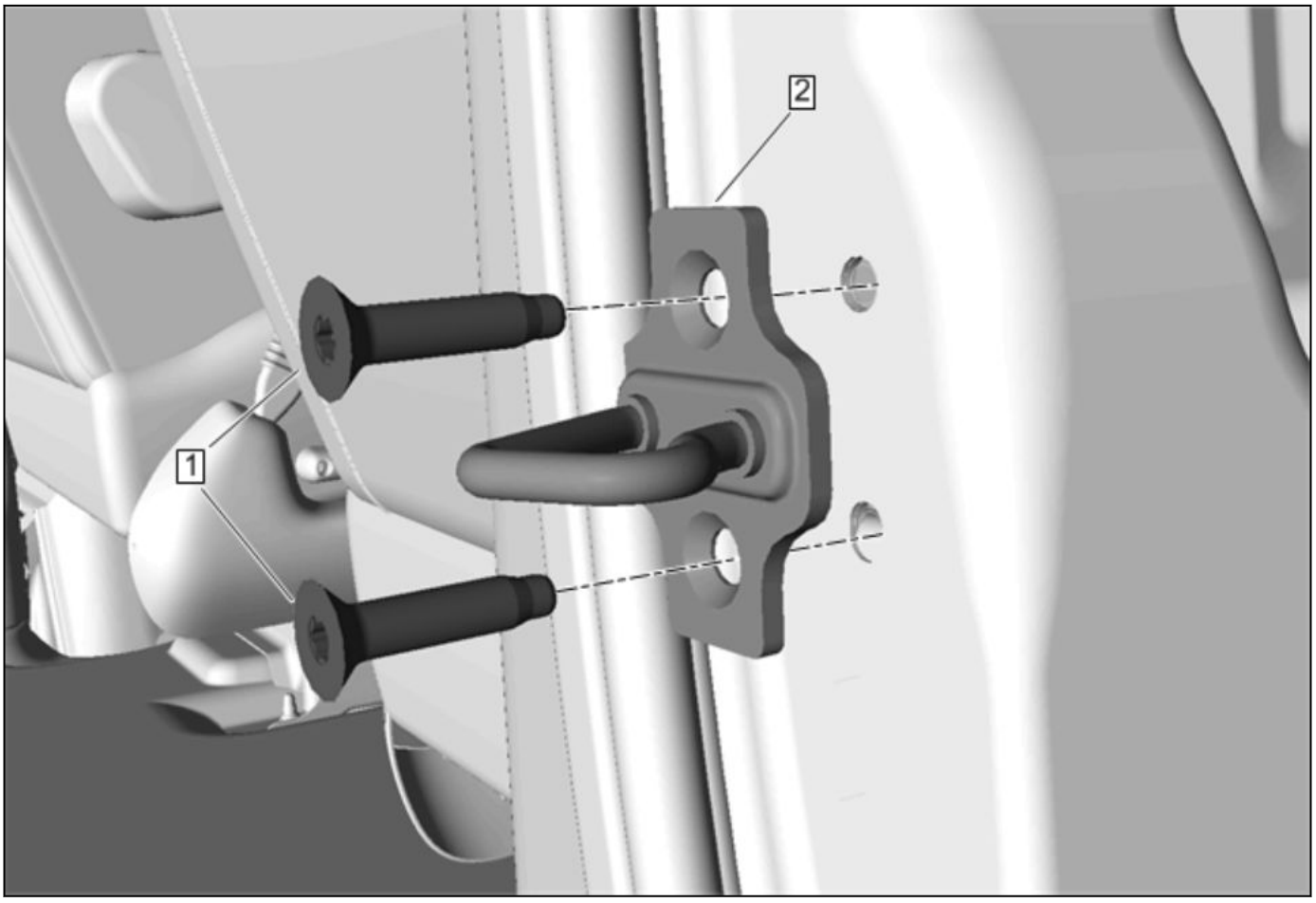

4867305

Rear Side Door Latch Striker Replacement (Sliding Door Front)

Callout	Component Name
1	Rear Side Door Latch Striker Bolt [2x] **Caution:** Refer to [Link target (target-id 178169-) not found] . **Tighten** 24 newtonm (18 lb ft)
2	Rear Side Door Latch Striker – Sliding Front

Rear Side Door Latch Striker Replacement (Sliding Door Rear)

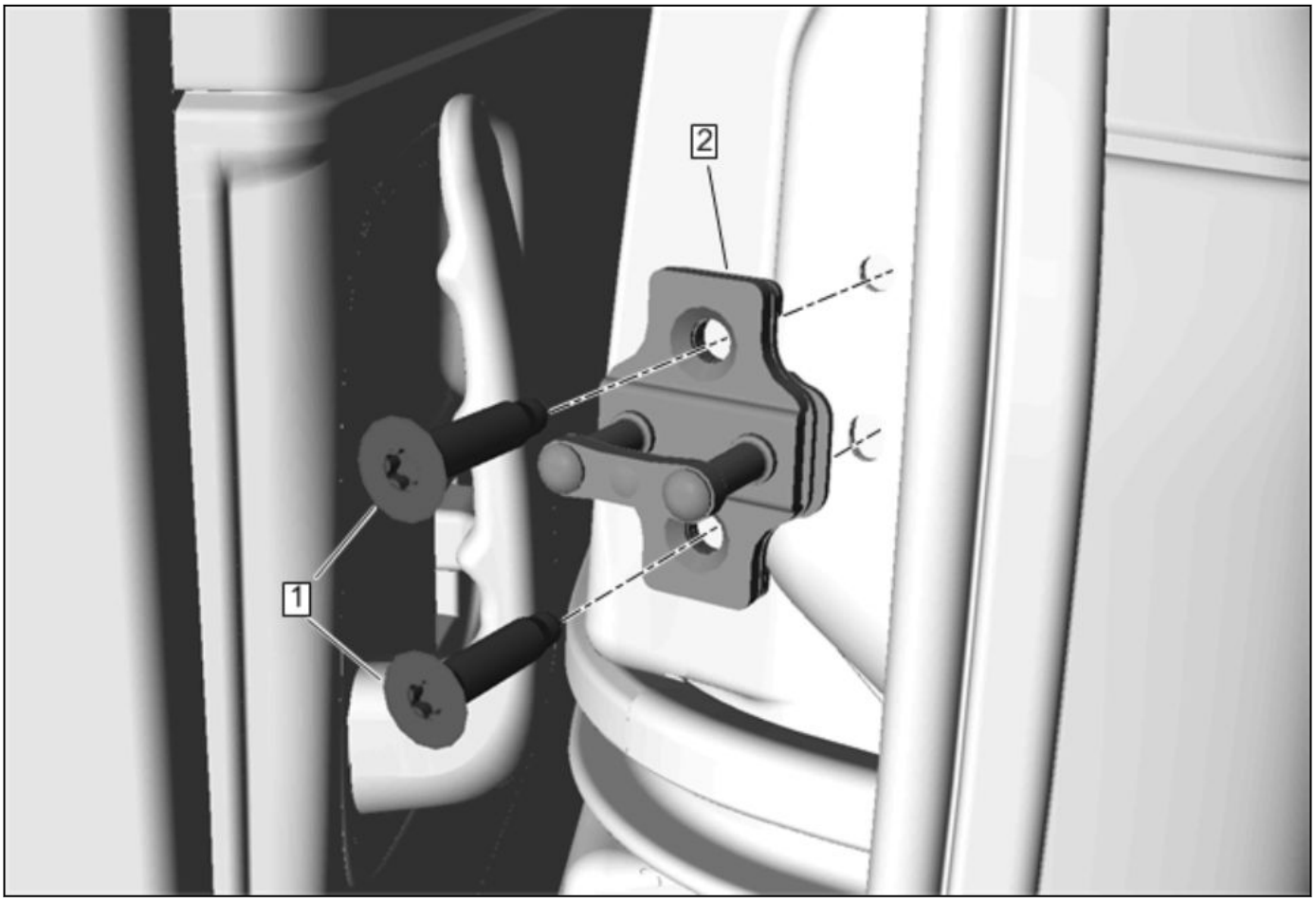

4867313

Rear Side Door Latch Striker Replacement (Sliding Door Rear)

Callout	Component Name
1	Rear Side Door Latch Striker Bolt [2x] **Caution:** Refer to [Link target (target-id 178169-) not found] . **Tighten** 24 newtonm (18 lb ft)
2	Rear Side Door Latch Striker – Sliding Rear

Rear Side Door Latch Striker Replacement - Lower

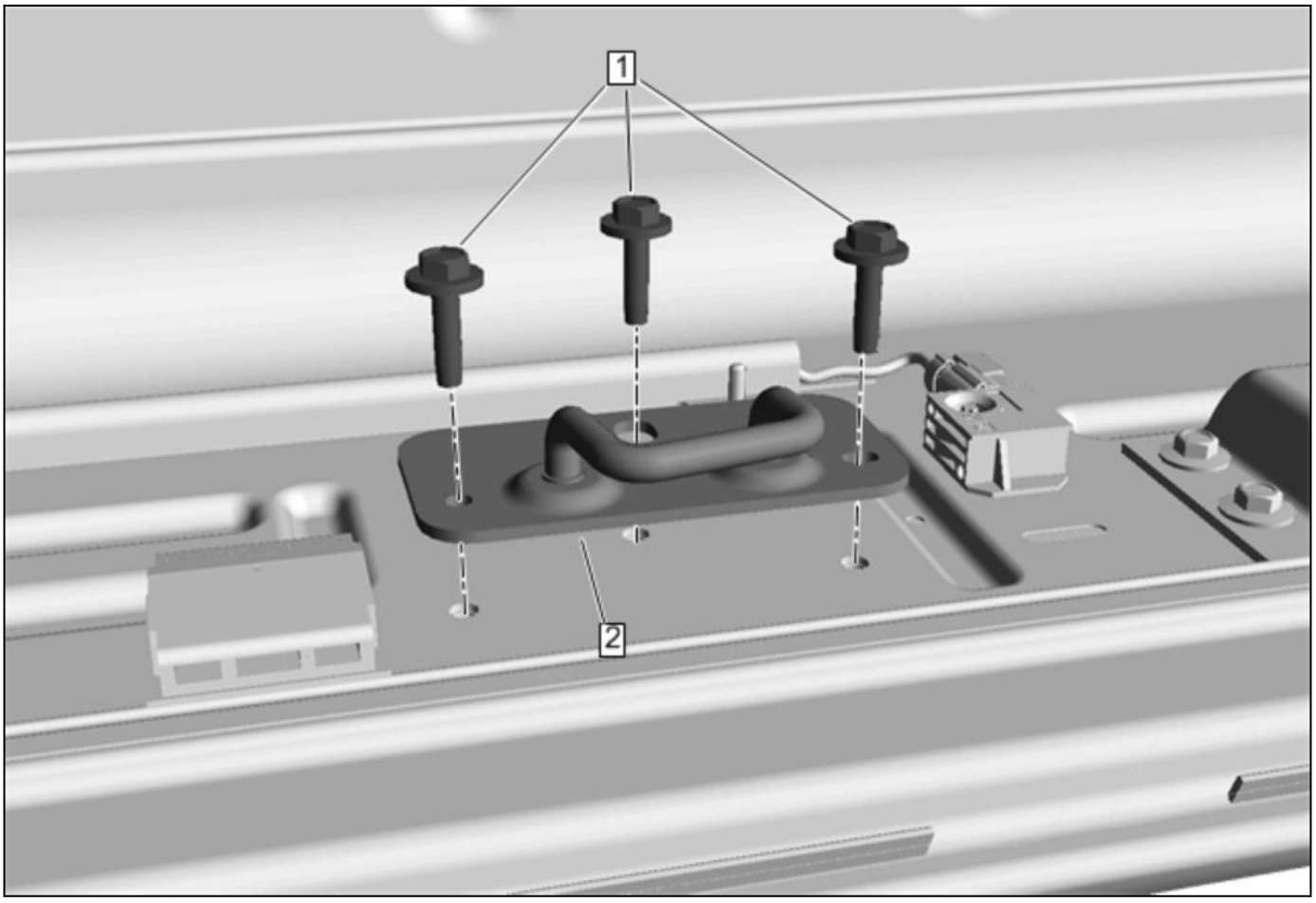

4855021

Rear Side Door Latch Striker Replacement - Lower

Callout	Component Name
Preliminary Procedure [Link target (target-id 148376-) not found]	
1	Rear Side Door Latch Striker Bolt [3x] **Caution:** Refer to [Link target (target-id 178169-) not found] . **Tighten** 10 newtonm (89 lb in)
2	Rear Side Door Latch Striker – Lower

Rear Side Door Latch Striker Adjustment - Front

1. Loosen the sliding side door front striker bolts.
2. Slide the door towards the striker.
3. Ensure that the lock fully engages the striker.

   Add or delete spacers behind the striker in order to accomplish this adjustment.

Caution: Refer to [Link target (target-id 178169-) not found] .

4. Adjust the sliding side door front striker bolts and tighten to **25 newtonm (18 lb ft)**.

Rear Side Door Latch Striker Adjustment - Rear

1. Loosen the sliding side door rear striker bolts.
2. Slide the door towards the striker.
3. Ensure that the lock fully engages the striker.

   Add or delete spacers behind the striker in order to accomplish this adjustment.

Caution: Refer to [Link target (target-id 178169-) not found] .

4. Adjust the sliding side door rear striker bolts and tighten to **25 newtonm (18 lb ft)**.

Rear Door Latch Striker Replacement - Upper

Removal Procedure

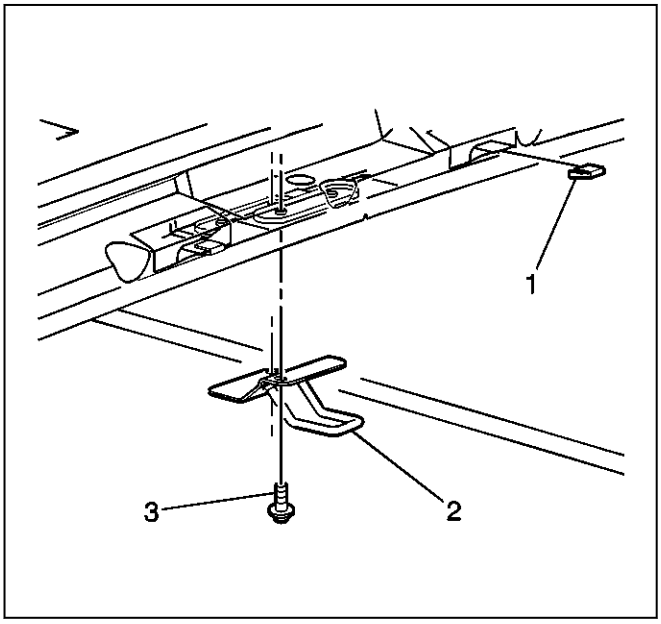

334083

1. Remove the back body opening garnish molding. Refer to [Link target (target-id 149915-) not found] .
2. Remove the bolts (3) that retain the rear door upper striker (2) to the door opening.
3. Remove the rear door upper striker (2) from the door opening.

Installation Procedure

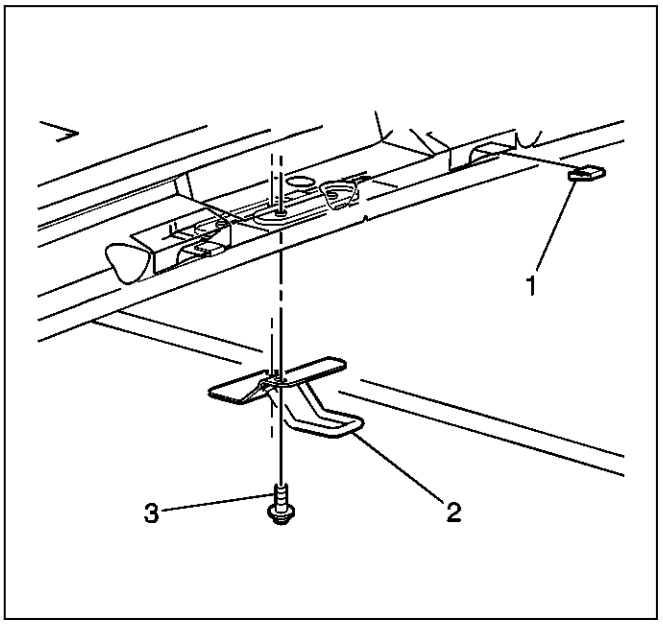

334083

1. Install the rear door upper striker (2) to the door opening.

Caution: Refer to [Link target (target-id 178169-) not found] .

2. Install the bolts (3) in order to retain the rear door upper striker (3) to the door opening and tighten to **10 newtonm (89 lb in)**.
3. Install the back body opening garnish molding. Refer to [Link target (target-id 149915-) not found] .

Rear Side Door Latch Striker Replacement - Upper

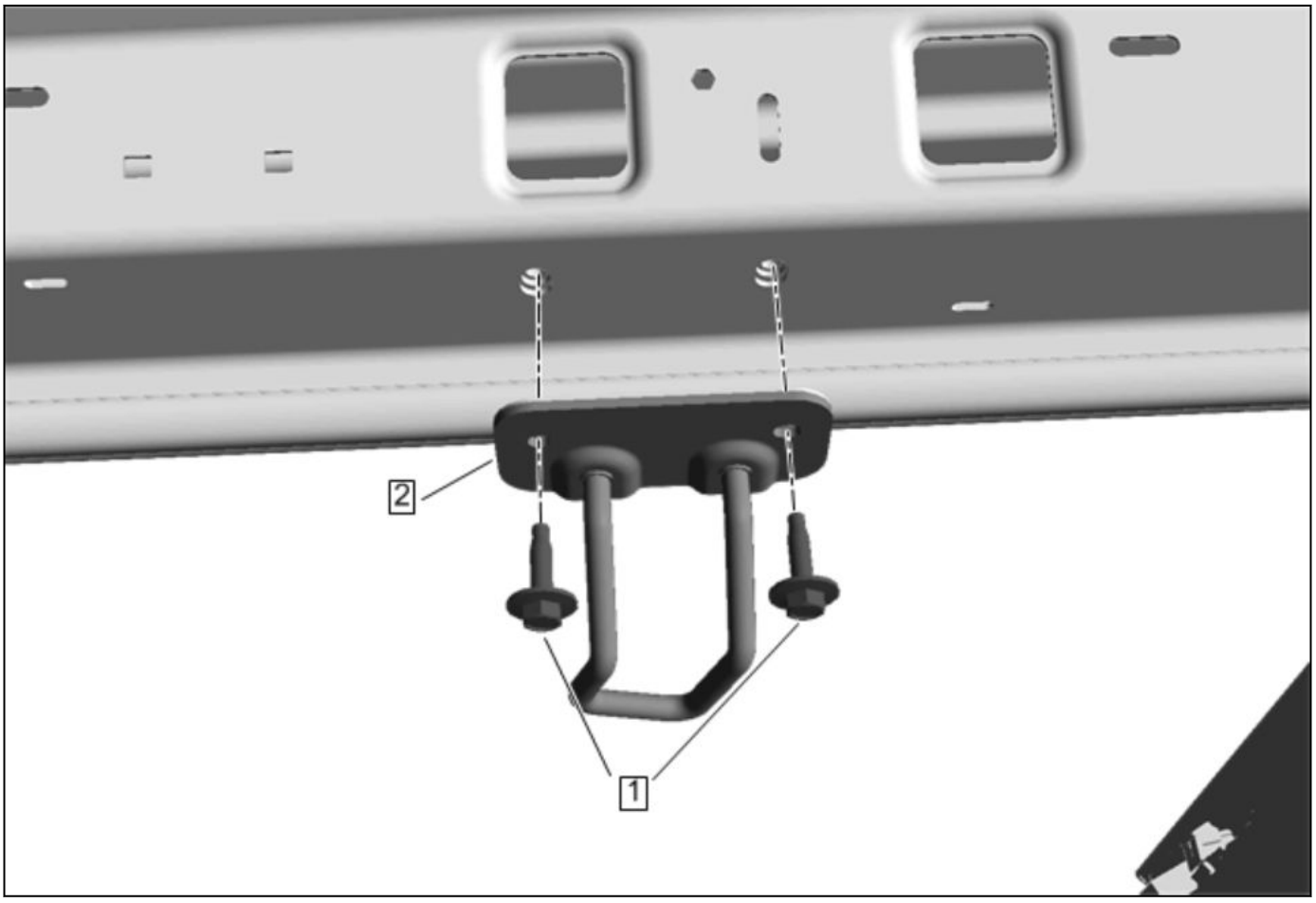

4855025

Rear Side Door Latch Striker Replacement - Upper

Callout	Component Name
Preliminary Procedure [Link target (target-id 148370-) not found]	
1	Rear Side Door Latch Striker Bolt [2x] **Caution:** Refer to [Link target (target-id 178169-) not found] . **Tighten** 10 newtonm (89 lb in)
2	Rear Side Door Latch Striker – Upper

Door Lock Switch Replacement

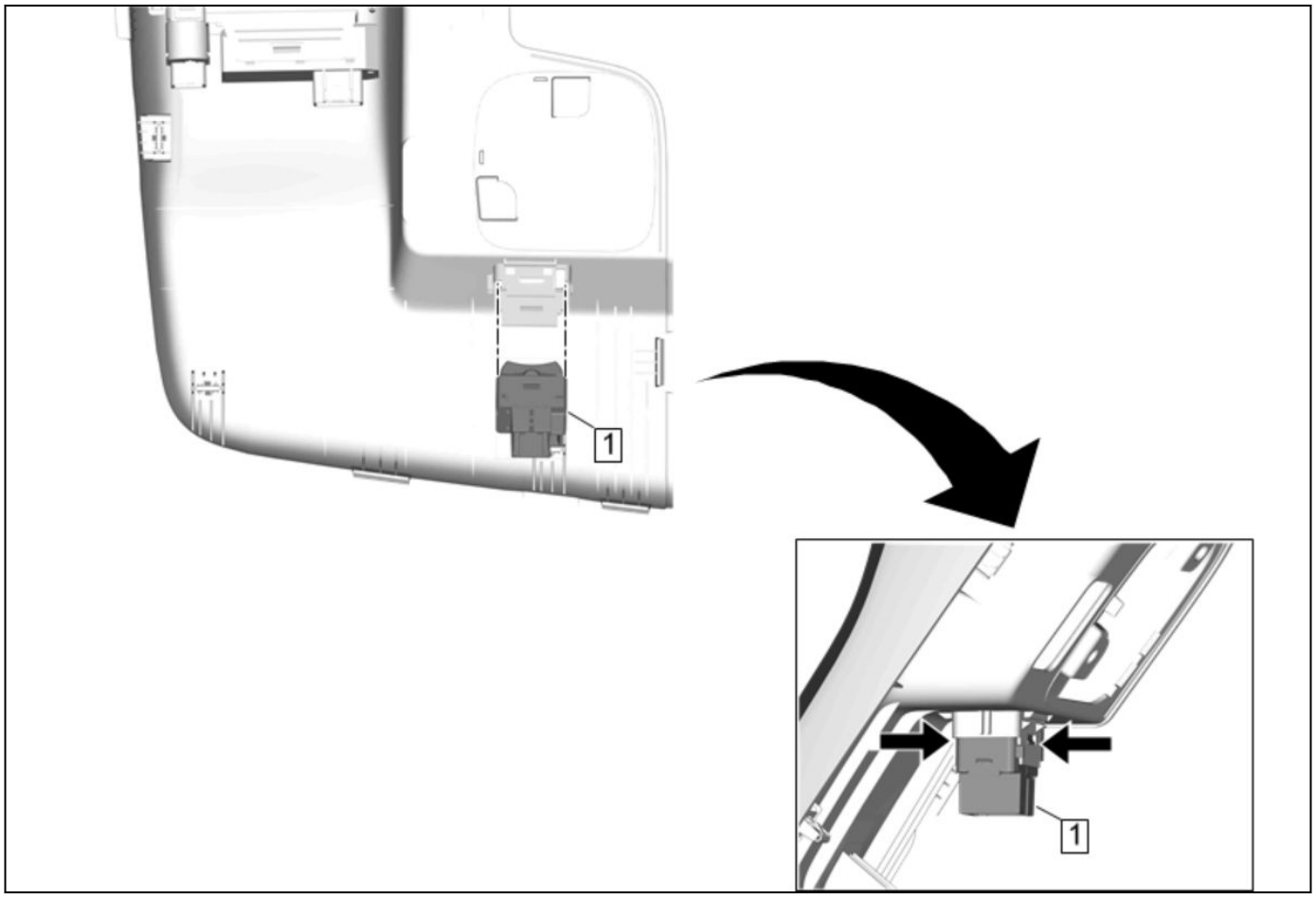

4862643

Door Lock Switch Replacement

Callout	Component Name
Preliminary Procedure [Link target (target-id 149959-) not found]	
1	Door Lock Switch **Procedure** From the backside of the front door trim plate, use a plastic trim tool to gently push in on the side tabs to release the switch from the front door trim plate.

Wipers and Washers

Specifications

Fastener Specifications

Reusable Threaded Fastener Tightening Specifications

Note: All fasteners listed in this table can be reused after removal.	
Application	**Specification**
	Metric (English)
Air Inlet Grille Panel Bolt	0.2 N•m (2 lb in)
Plenum Drain Tube Nut	5.5 N•m (49 lb in)
Windshield Wiper Arm Nut	32 N•m (24 lb ft)
Windshield Wiper Motor Bolt	9 N•m (80 lb in)
Windshield Washer Solvent Container Bolt	10 N•m (89 lb in)
Windshield Wiper Transmission Bolt	8 N•m (71 lb in)

Schematic and Routing Diagrams

7085678

Wiper/Washer Schematics (Wiper Controls)

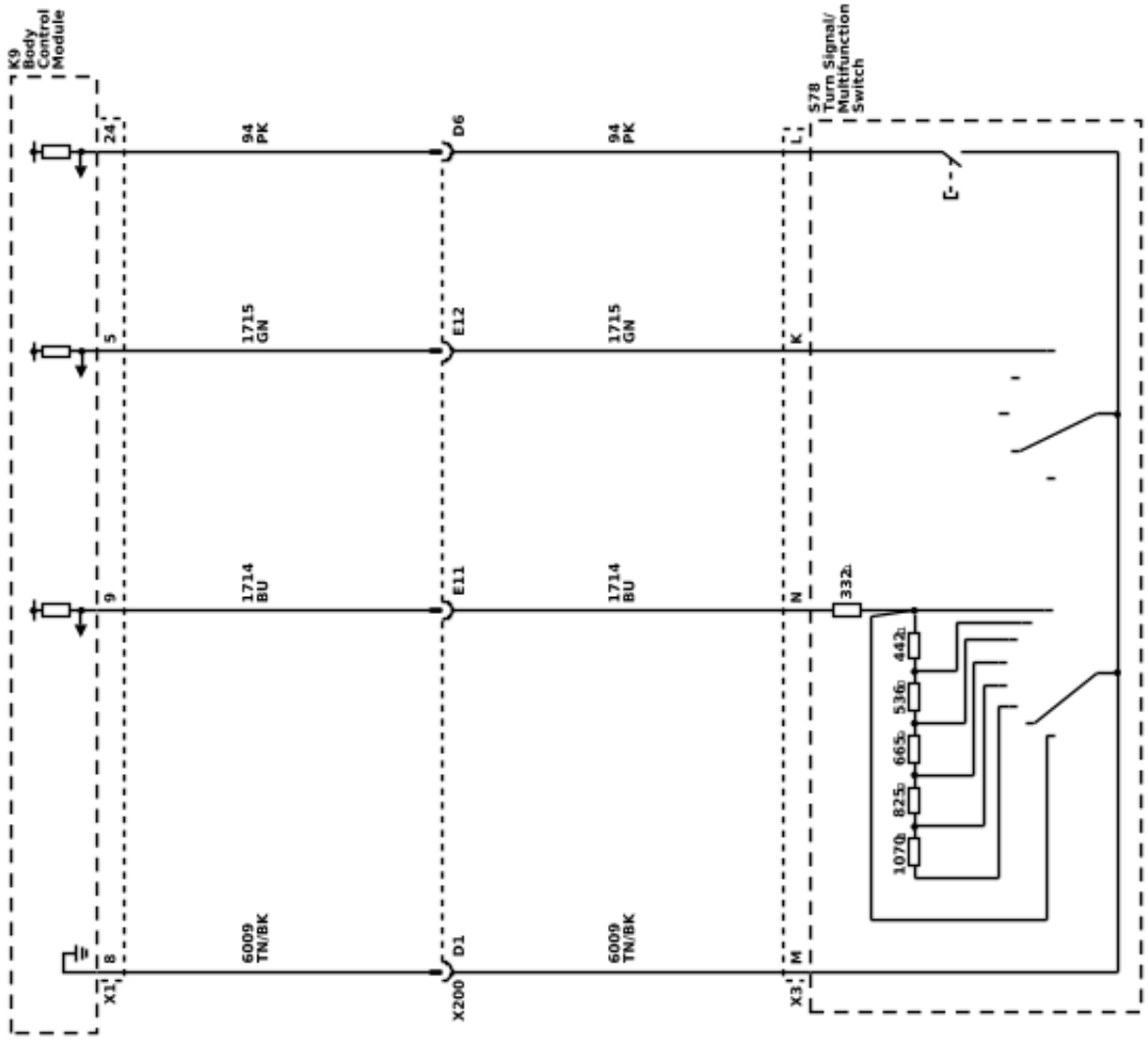

Wiper/Washer Schematics (Wiper and Washer Motor Control)

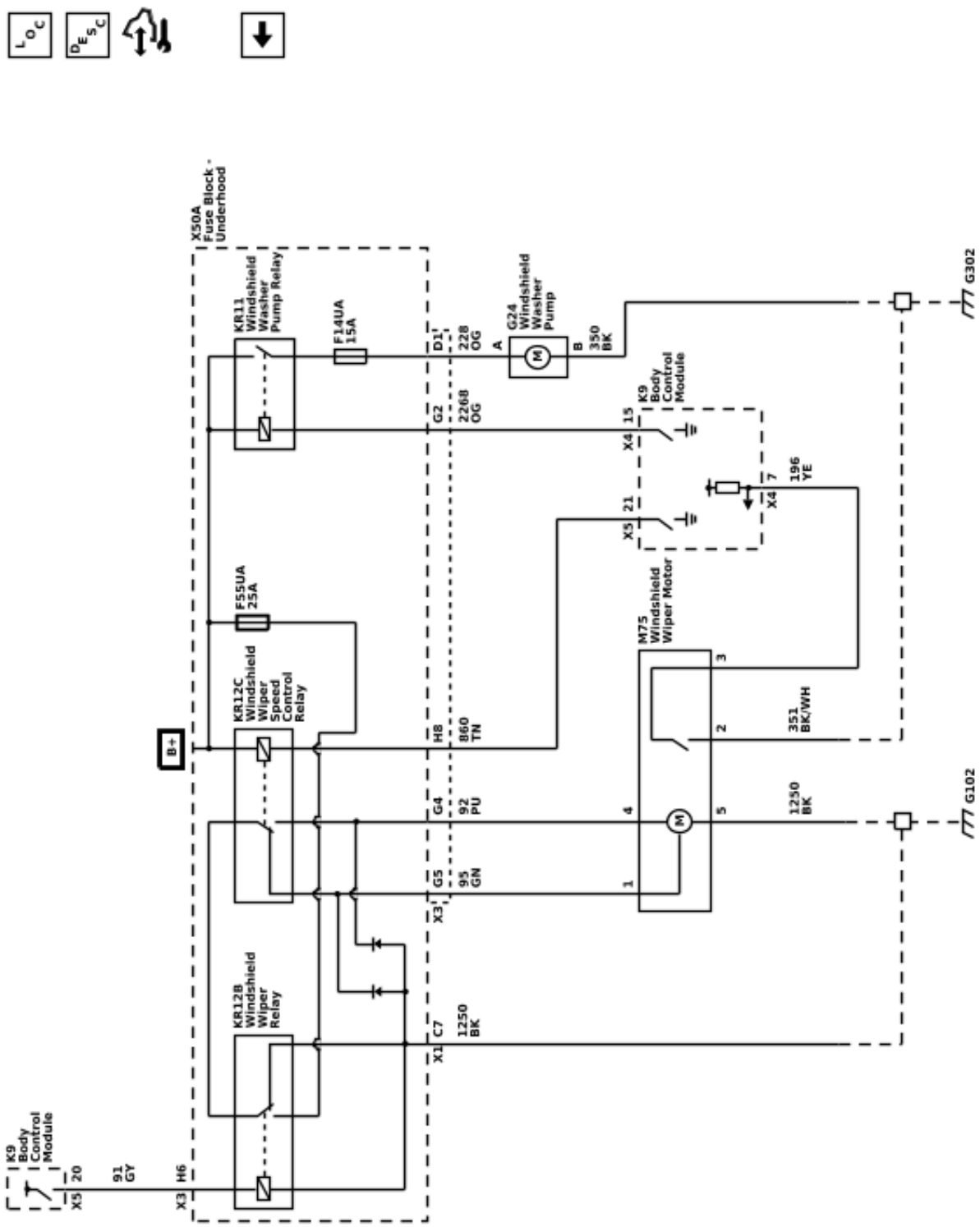

7085679

Diagnostic Information and Procedures

Wiper Arm Tip Pressure Check

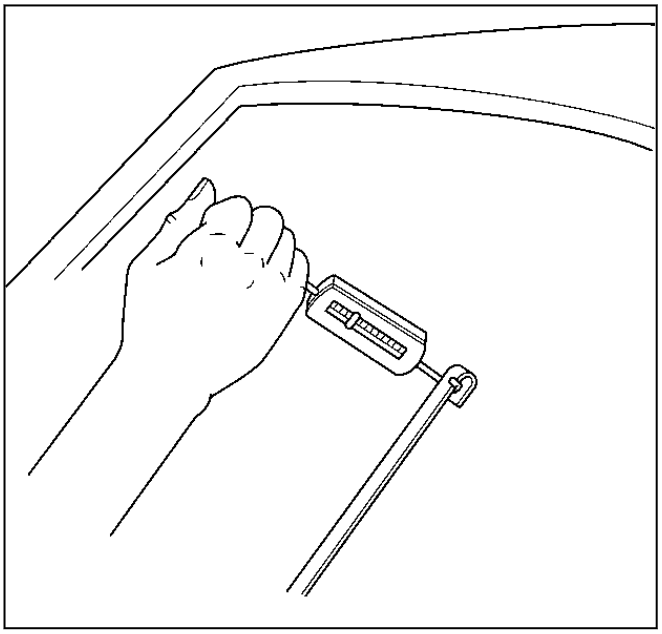

306518

1. Run the wiper arms to the mid-wipe position.
2. Remove the wiper blades from the wiper arms. Refer to *Windshield Wiper Blade Replacement 1-172*.
3. Attach a scale to the end of the wiper arm and measure the force required to lift the wiper arm perpendicular to the windshield to normal working height (height with the blade attached).
4. Replace the wiper arm if the measurement is not within the specification. Refer to *Windshield Wiper Arm Replacement 1-171*.

Tip Pressure

- Driver Side — 8.1–9.5 Newtons (29– 34 Ounces)
- Passenger Side — 5.8–7.0 Newtons (21– 25 Ounces)

Wiper Blade Element Check

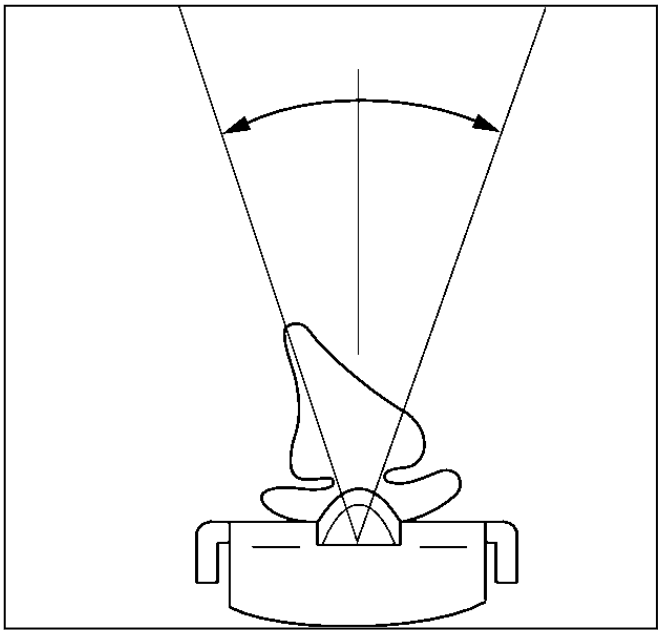

334256

1. Remove the wiper blades from the wiper arms. Refer to *Windshield Wiper Blade Replacement 1-172*.
2. Look down the length of the blade element.
3. Replace the wiper blade element if the rubber element which contacts the glass is not on the centerline of the blade +/−15 degrees. Refer to *Wiper Blade Element Replacement 1-173*.
4. Install the wiper blades on the wiper arms. Refer to *Windshield Wiper Blade Replacement 1-172*.

Repair Instructions

Windshield Washer Hose Replacement

Removal Procedure

1. Air Inlet Grille Panel - Left Side» Remove— *Air Inlet Grille Panel Replacement (Left Side) 1-169* *Air Inlet Grille Panel Replacement (Right Side) 1-170*

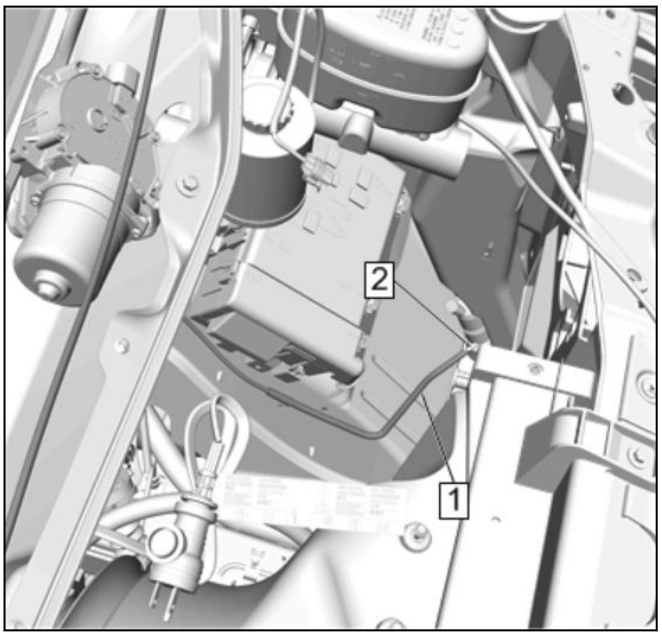

4860815

2. Windshield Washer Hose (1) @ Windshield Washer Pump(2) » Disconnect

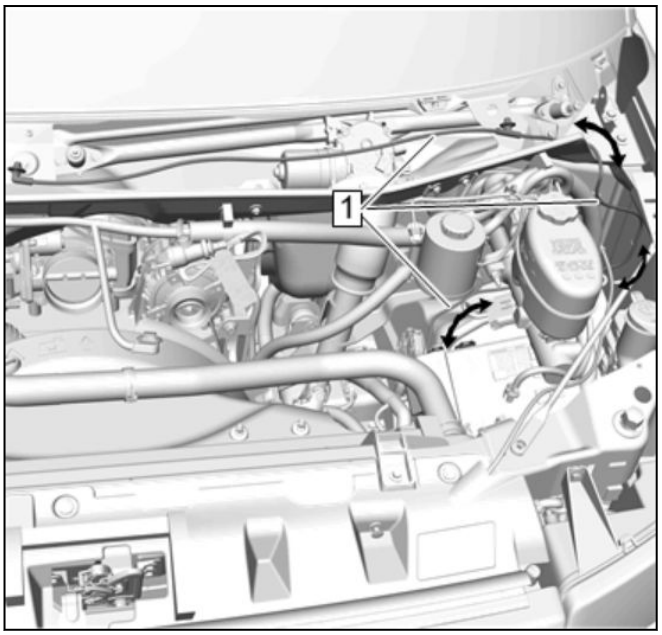

4860819

3. Pull the windshield washer hose (1) through the plenum lower panel opening, under the brake master cylinder and over the left front wheelhouse panel.
4. Pull the windshield washer hose (1) up through the engine compartment to remove.
5. Remove the windshield washer hose (1) from the vehicle.

Installation Procedure

1. Lubricate the windshield washer hose ends with washer solvent and install to the washer hose end to the washer pump.

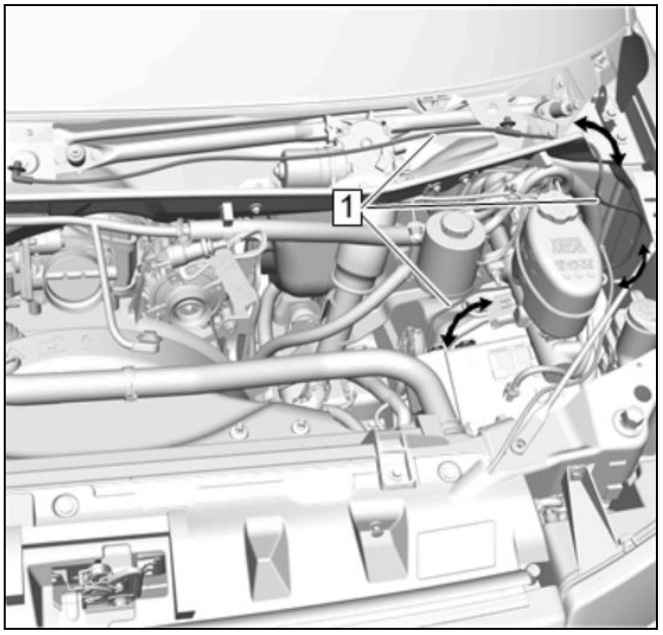

4860819

2. Route the windshield washer hose (1) over the front wheelhouse panel, under the brake master cylinder and through the plenum lower panel opening to its proper location.

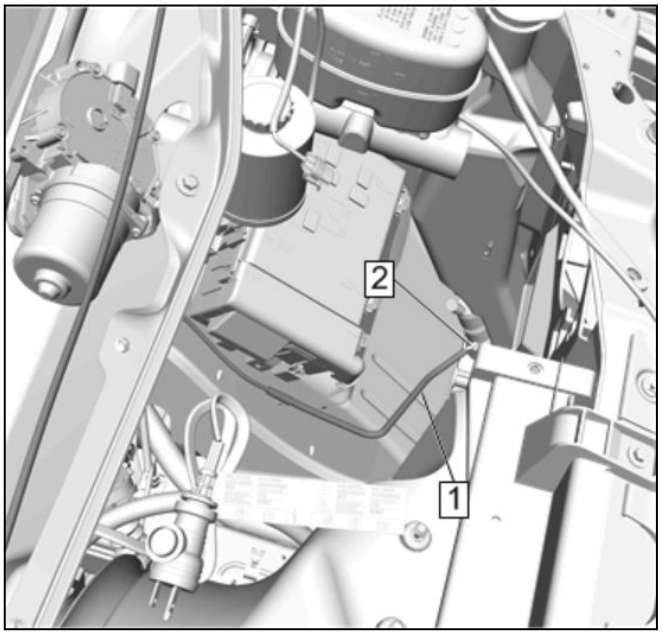

4860815

3. Windshield Washer Hose (1) @ Windshield Washer Pump(2) » Connect
4. Air Inlet Grille Panel - Left Side» Install— *Air Inlet Grille Panel Replacement (Left Side) 1-169* *Air Inlet Grille Panel Replacement (Right Side) 1-170*
5. Fill the windshield washer solvent container.

Windshield Washer Solvent Container Replacement

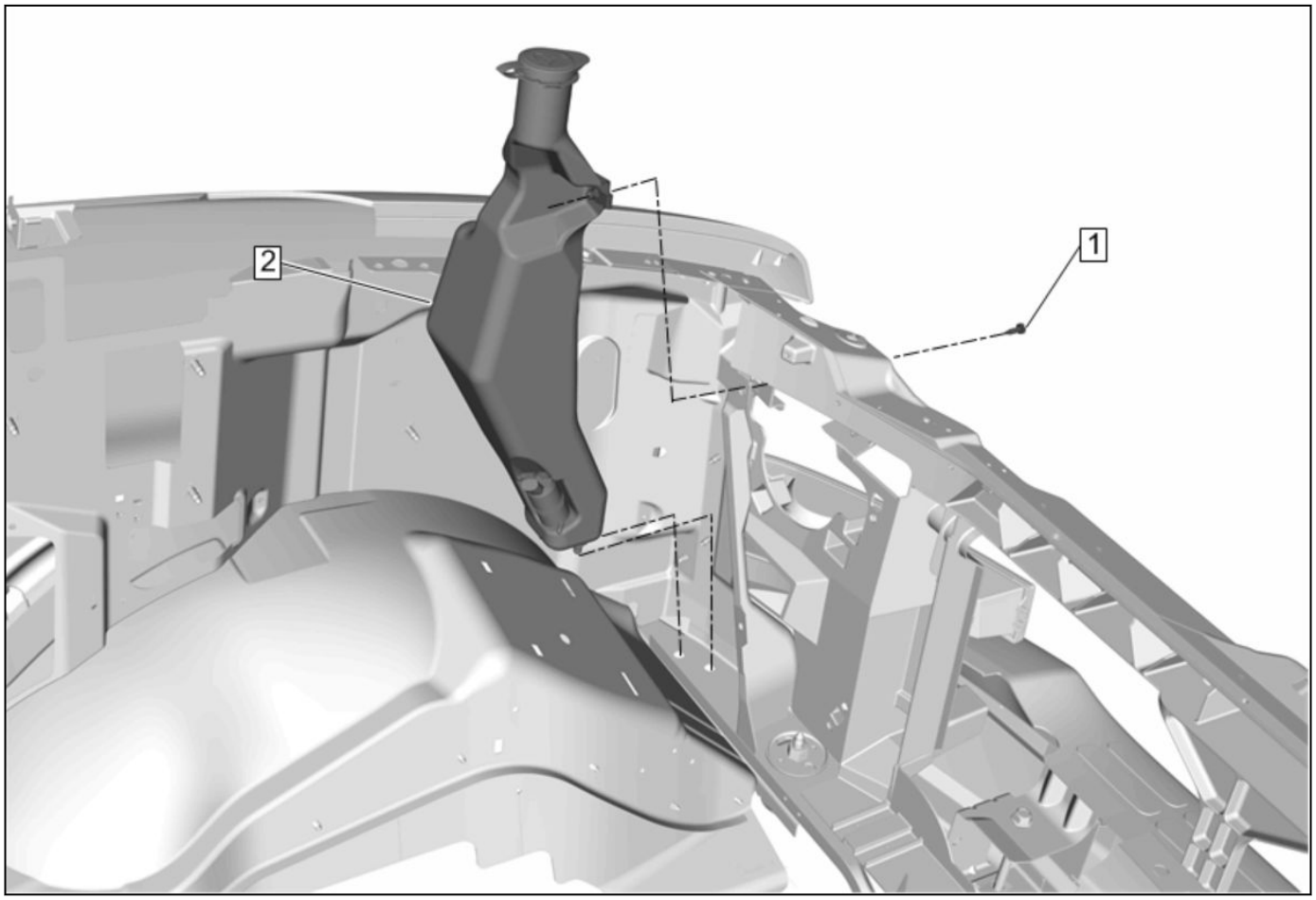

4846596

Windshield Washer Solvent Container Replacement

Callout	Component Name
Preliminary Procedures 1. Place a drain pan under the vehicle. 2. Disconnect the electrical connector. 3. Disconnect the windshield washer pump hose. 4. Reposition the brake master cylinder. [Link target (target-id 50183-) not found]	
1	Windshield Washer Solvent Container Bolt **Caution:** Refer to [Link target (target-id 178169-) not found] . **Tighten** 10 newtonm (89 lb in)
2	Windshield Washer Solvent Container **Procedure** 1. Lift the windshield washer solvent container from the locating holes in the front end lower panel support. 2. Transfer components as necessary.

Washer Pump Replacement

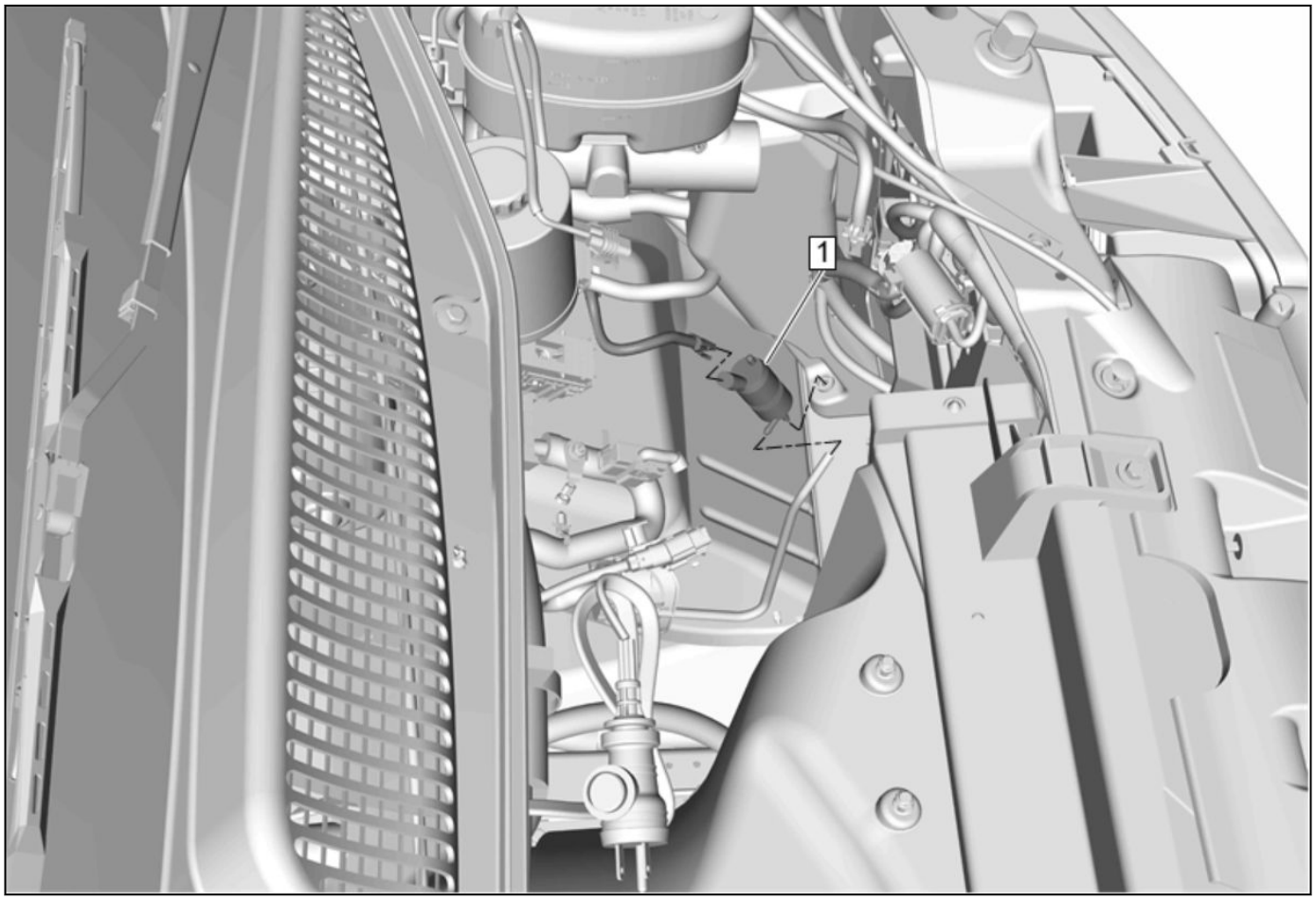

4859197

Washer Pump Replacement

Callout	Component Name
Preliminary Procedure Place a clean suitable drain pan under the windshield washer solvent container to recover the windshield washer solvent when the windshield washer pump hose is disconnected.	
1	Windshield Washer Pump **Procedure** 1. Disconnect the windshield washer pump hose. 2. Disconnect the electrical connector. 3. Twist and lift in opposite directions to disengage the windshield washer pump from the windshield washer solvent container and grommet.

Plenum Drain Tube Replacement

Removal Procedure

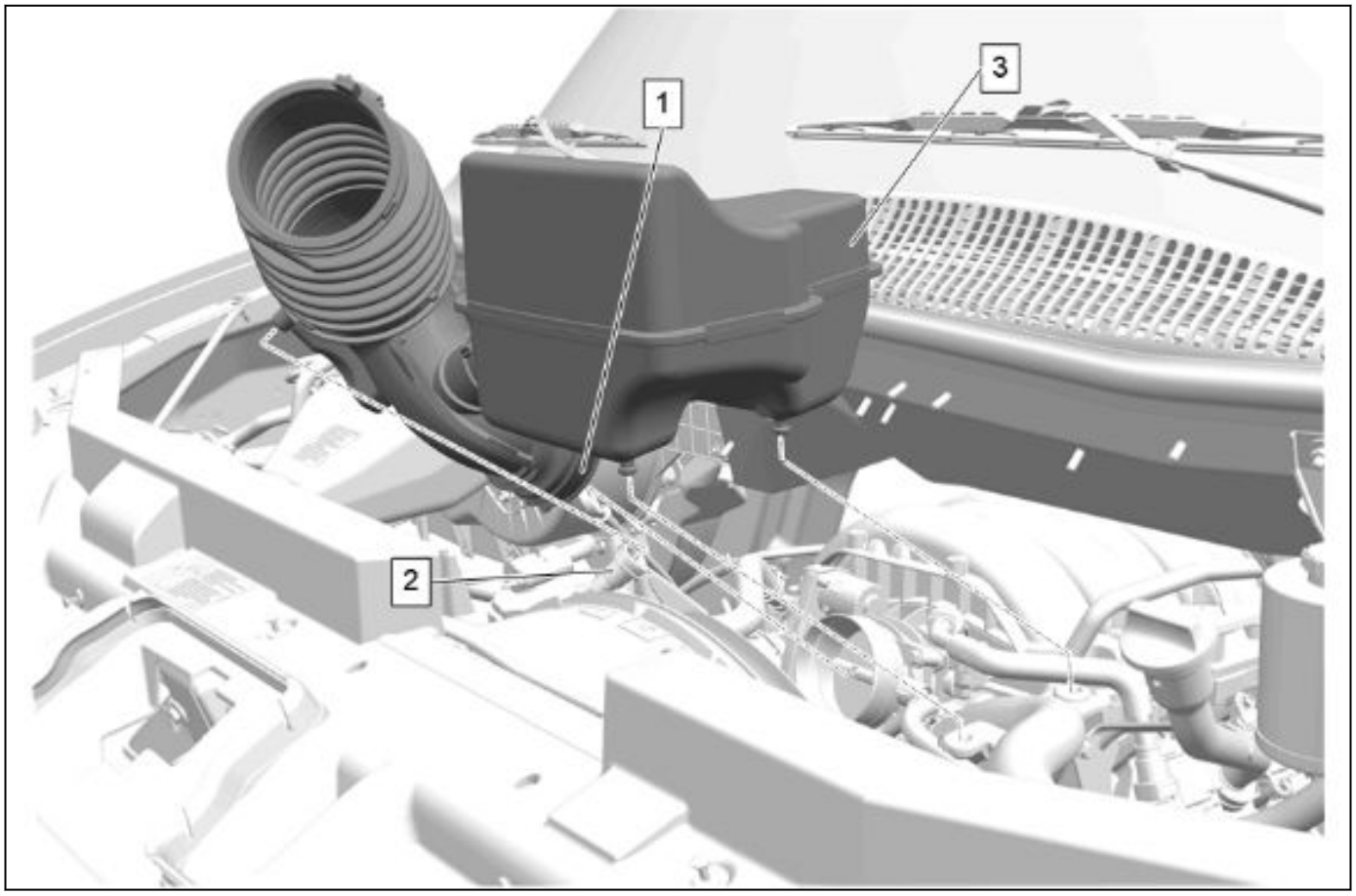

5659972

1. Air Cleaner Outlet Duct » Remove— [Link target (target-id 227760-) not found]

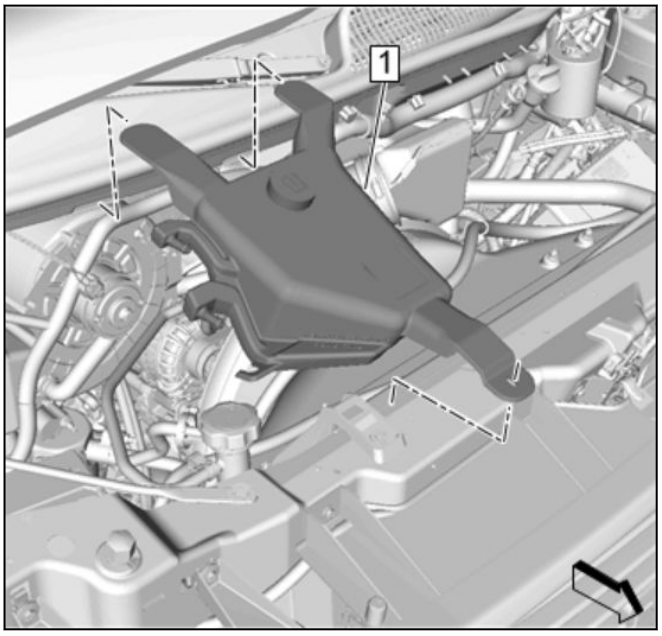

4840951

2. Coolant Recovery Reservoir (1) » Reposition— [Link target (target-id 37161-) not found]

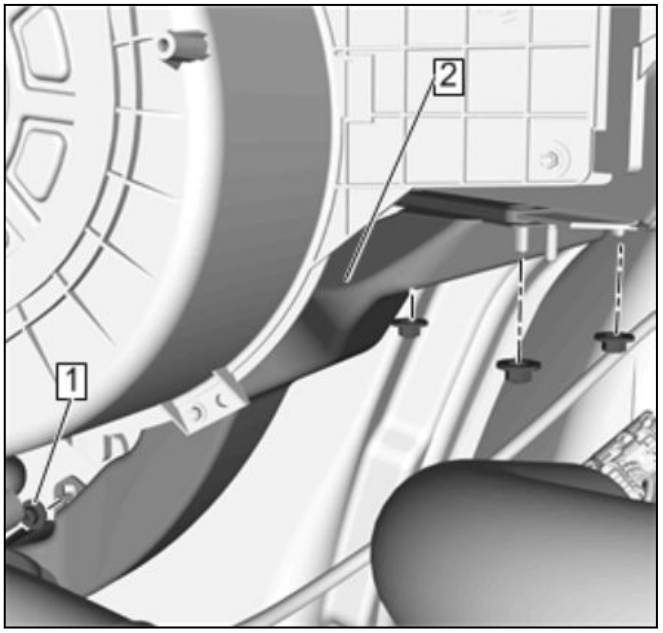

4824123

Note: Quantity of fasteners may vary based on option content.

3. Plenum Drain Tube Nut (1) » Remove[4x]
4. Plenum Drain Tube (2) » Remove

Installation Procedure

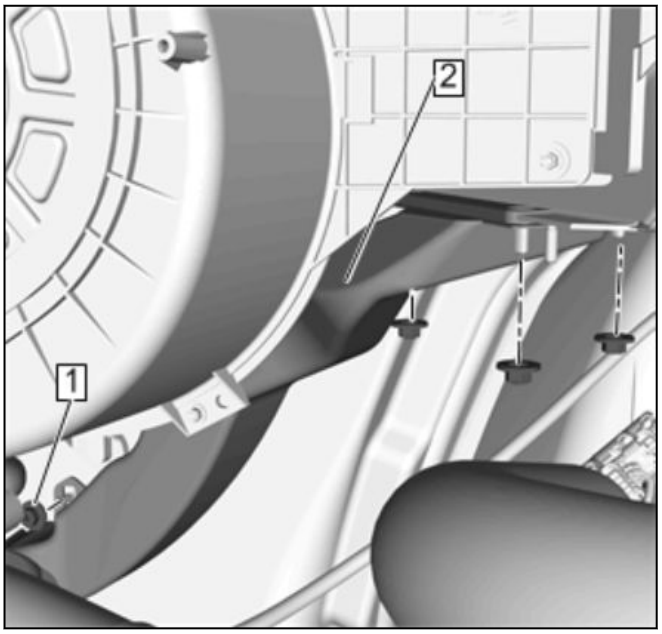

4824123

1. Plenum Drain Tube (2) » Install

Caution: Refer to [Link target (target-id 178169-) not found] .

Note: Quantity of fasteners may vary based on option content.

2. Plenum Drain Tube Nut (1) » Install and tighten[4x] **5.5** N•m **(49 lb in)**

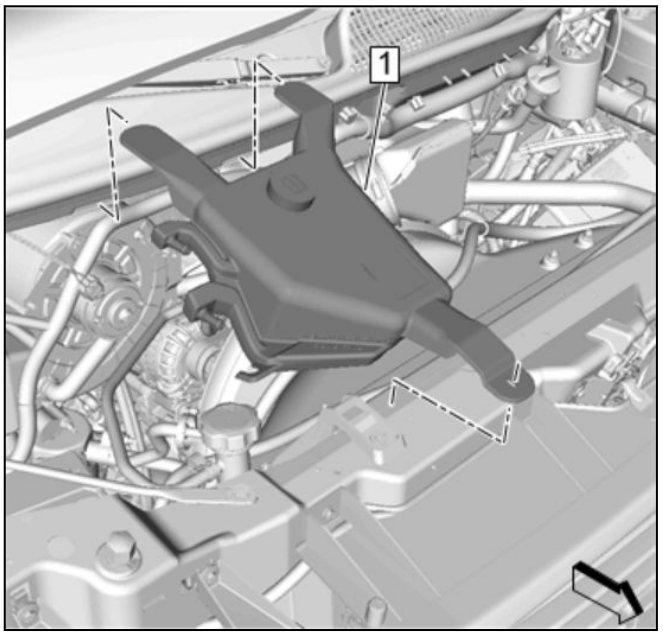

4840951

3. Coolant Recovery Reservoir (1) » Install— [Link target (target-id 37161-) not found]

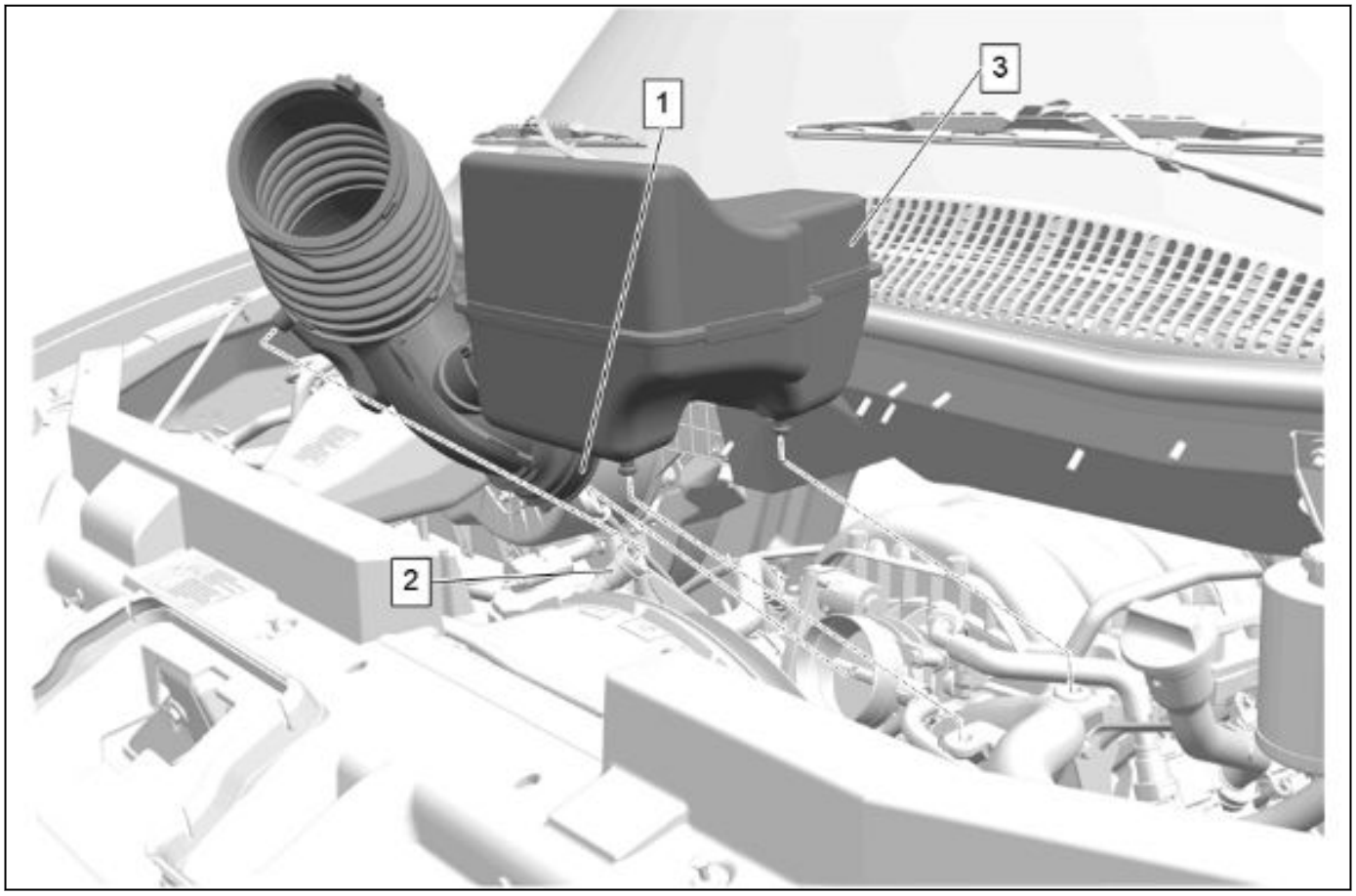

5659972

4. Air Cleaner Outlet Duct » Install— [Link target (target-id 227760-) not found]

Air Inlet Grille Panel Replacement (Left Side)

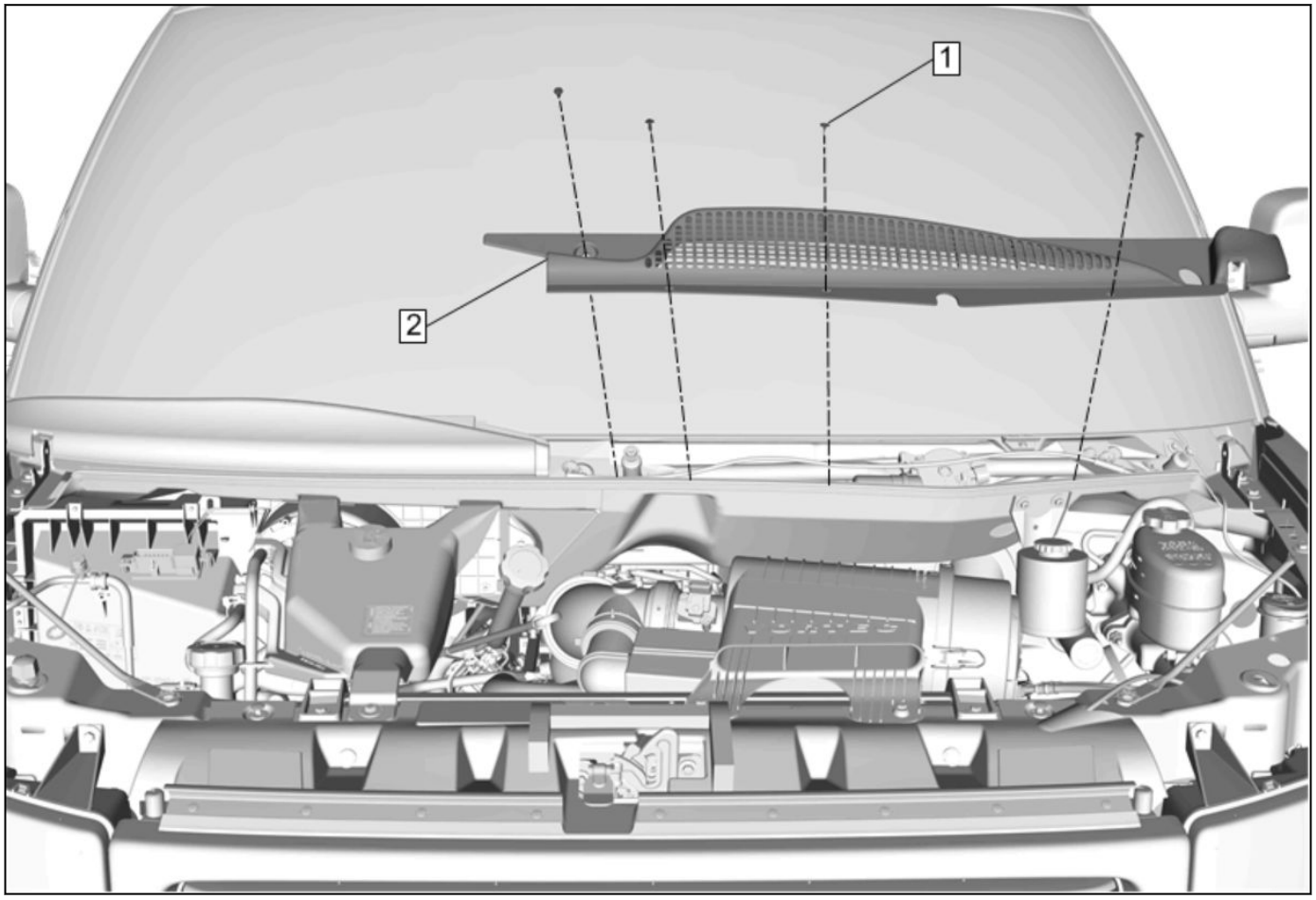

4855823

Air Inlet Grille Panel Replacement (Left Side)

Callout	Component Name
Preliminary Procedures 1. *Windshield Wiper Arm Replacement 1-171* 2. [Link target (target-id 162517-) not found]	
1	Air Inlet Grille Panel Bolt [4x] **Caution:** Refer to [Link target (target-id 178169-) not found] . **Tighten** 0.2 N•m (2 lb in)
2	Air Inlet Grille Panel - Left Side **Procedure** 1. Using an appropriate tool, release the air inlet grille panel from the windshield lower molding. 2. Lift up the front edge of the air inlet grille panel, slide the grille panel forward from both hood hinges. 3. Disconnect the windshield washer nozzle hose from the windshield washer hose. 4. Transfer components as necessary.

Air Inlet Grille Panel Replacement (Right Side)

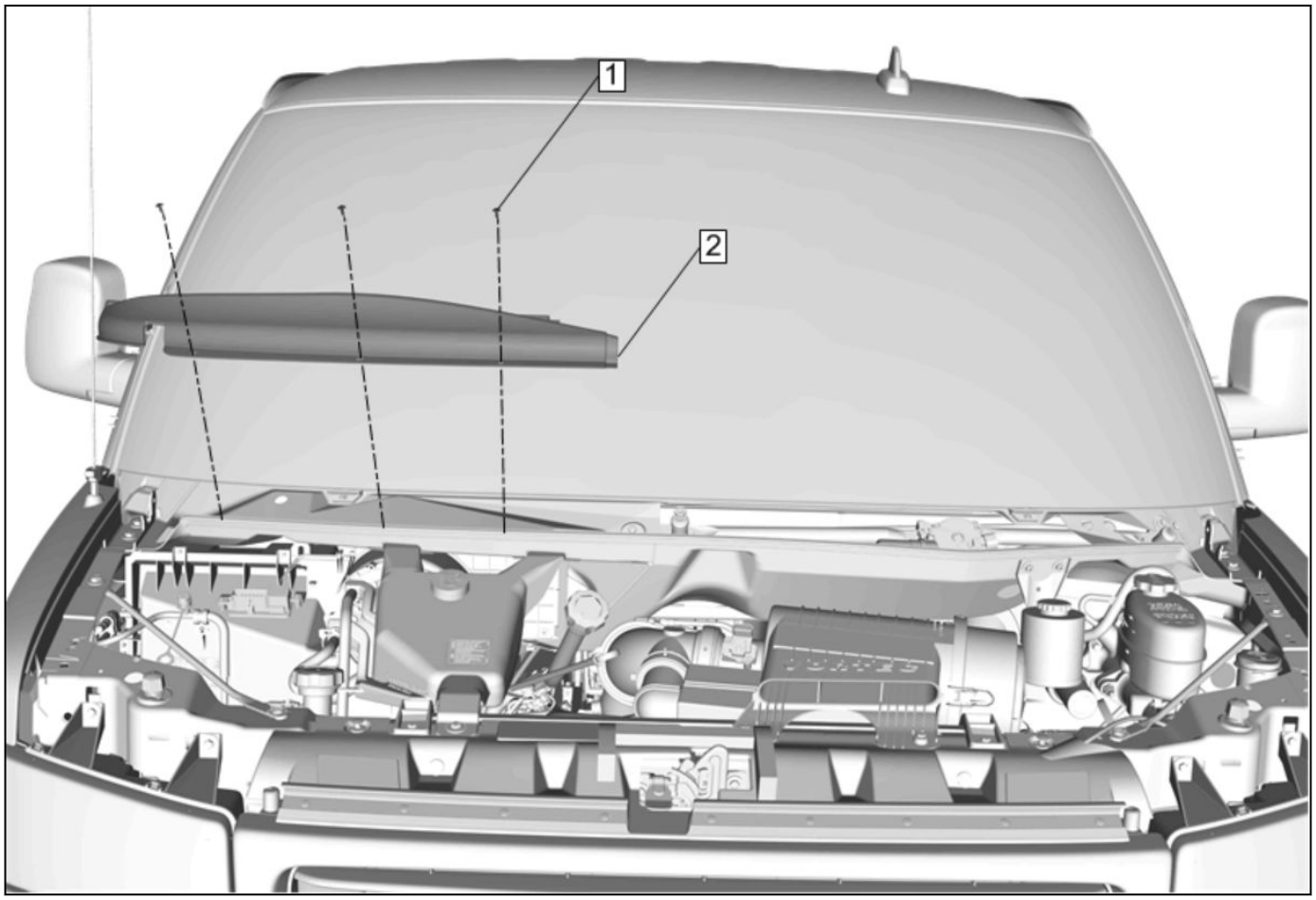

4855826

Air Inlet Grille Panel Replacement (Right Side)

Callout	Component Name
Preliminary Procedures 1. *Windshield Wiper Arm Replacement 1-171* 2. Air Inlet Grille Panel - Left Side» Remove— *Air Inlet Grille Panel Replacement (Left Side) 1-169* *Air Inlet Grille Panel Replacement (Right Side) 1-170*	
1	Air Inlet Grille Panel Bolt [3x] **Caution:** Refer to [Link target (target-id 178169-) not found] . **Tighten** 0.2 N•m (2 lb in)
2	Air Inlet Grille Panel - Right Side **Procedure** 1. Using an appropriate tool, release the air inlet grille panel from the windshield lower molding. 2. Lift up the front edge of the air inlet grille panel, slide the grille panel forward from both hood hinges.

Windshield Wiper Arm Replacement

5040112

Windshield Wiper Arm Replacement

Callout	Component Name
1	Windshield Wiper Arm Finish Cap **Procedure** Using an appropriate trim tool, remove the finish cap from the wiper arm.
2	Windshield Wiper Arm Nut **Caution:** Refer to [Link target (target-id 178169-) not found] . **Tighten** 32 N•m (24 lb ft)
3	Windshield Wiper Arm **Procedure** 1. Grasp the outer end of the wiper arm and gently rock the arm back and forth, while holding the wiper arm blade off the windshield. 2. Remove the windshield wiper arm from the pivot shaft. 3. Clean the wiper motor pivot shaft knurls with a soft wire brush before installing a new wiper arm. 4. Position the wiper arm on the wiper motor pivot shaft. 5. Align the windshield wiper arm. *Windshield Wiper Arm Adjustment 1-177*

Windshield Wiper Blade Replacement

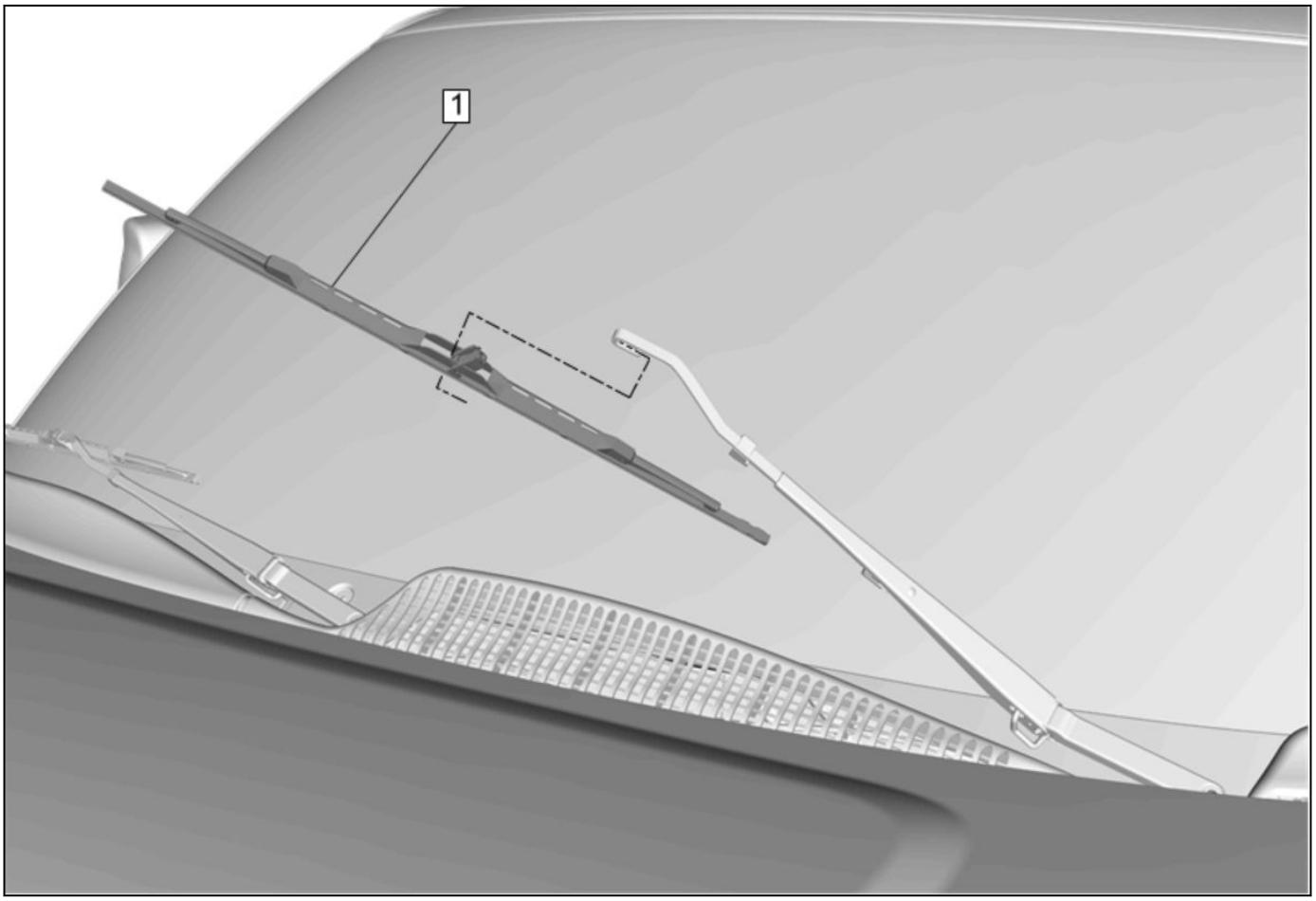

4856342

Windshield Wiper Blade Replacement

Callout	Component Name
1	Windshield Wiper Blade **Procedure** 1. Lift the windshield wiper arm from the windshield. 2. Disengage the windshield wiper blade lock from the windshield wiper arm. 3. Release the retention tab securing the windshield wiper blade to the windshield wiper arm. 4. Remove the windshield wiper blade.

Wiper Blade Element Replacement

Removal Procedure

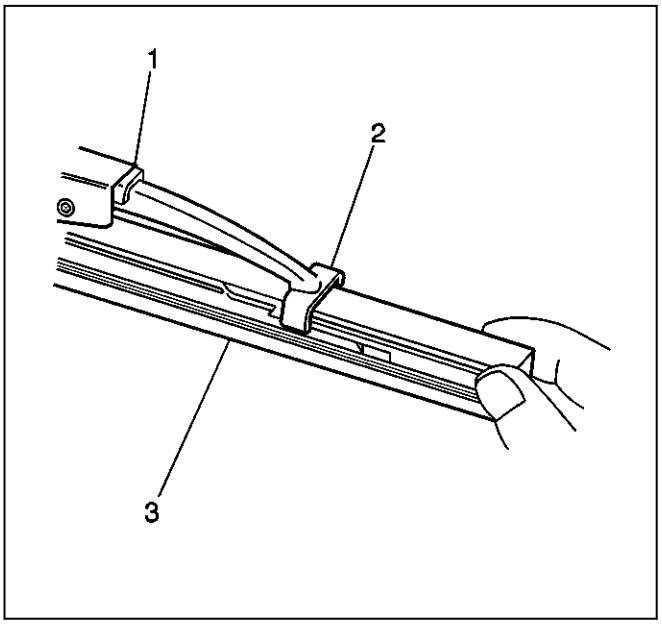

430069

Important: Replace the wiper blade element if it is removed from the wiper blade.

1. Remove the wiper blade from the wiper arm. Refer to *Windshield Wiper Blade Replacement 1-172*.
2. Remove the bottom claws (2) of the wiper blade (1) from the notches in the wiper blade element (3).
3. Pull the wiper blade element (3) out through the wiper blade claws (2).

Installation Procedure

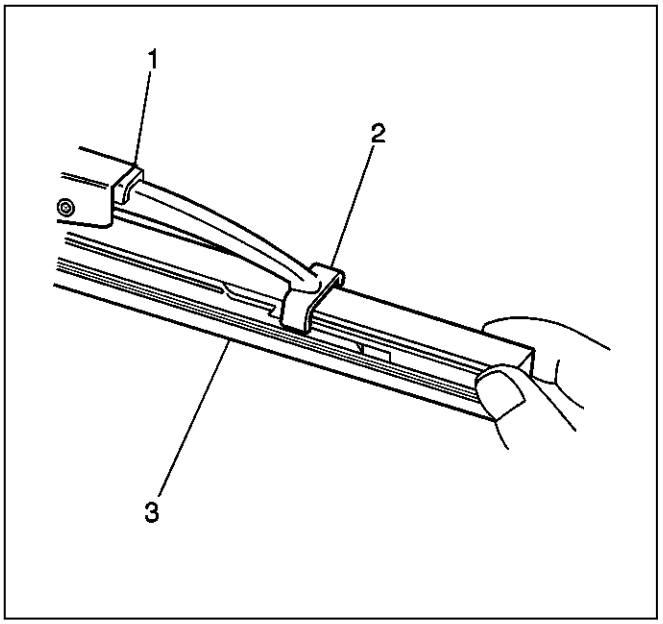

430069

Important: Keep the wiper blade claws in the rubber claw channel of the wiper blade element. Do not allow the claws of the wiper blade to contact the metal spline of the wiper blade element.

1. Insert the open end of the wiper blade element (3) into the bottom claws of the wiper blade (2).
2. Guide the wiper blade element (3) through the wiper blade (1) claw sets.
3. Engage the bottom claw (2) of the wiper blade (1) into the notches in wiper blade element (3).
4. Install the wiper blade onto the wiper arm. Refer to *Windshield Wiper Blade Replacement 1-172*.

Windshield Wiper System Module Replacement

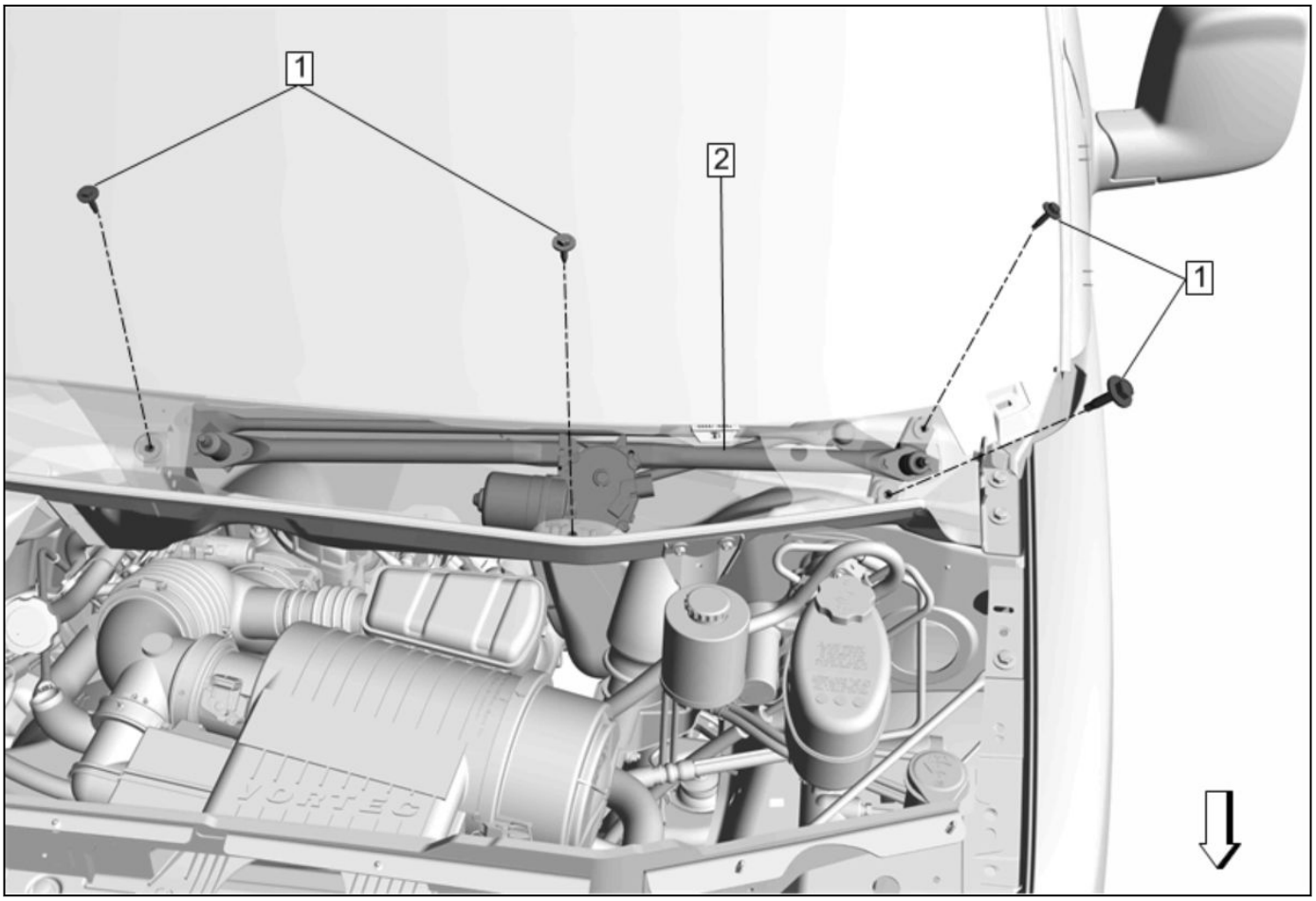

4859328

Windshield Wiper System Module Replacement

Callout	Component Name
Preliminary Procedure Air Inlet Grille Panel - Left Side» Remove— *Air Inlet Grille Panel Replacement (Left Side) 1-169* *Air Inlet Grille Panel Replacement (Right Side) 1-170*	
1	Windshield Wiper System Module Bolt [4x] **Caution:** Refer to [Link target (target-id 178169-) not found] . **Tighten** 8 N•m (71 lb in)
2	Windshield Wiper System Module **Procedure** 1. Disconnect the electrical connector. 2. Remove the windshield wiper system module from the plenum brackets. **Note:** The windshield wiper transmission and motor are serviced as an assembly.

Windshield Multifunction Sensor Mount Bracket Cover Replacement

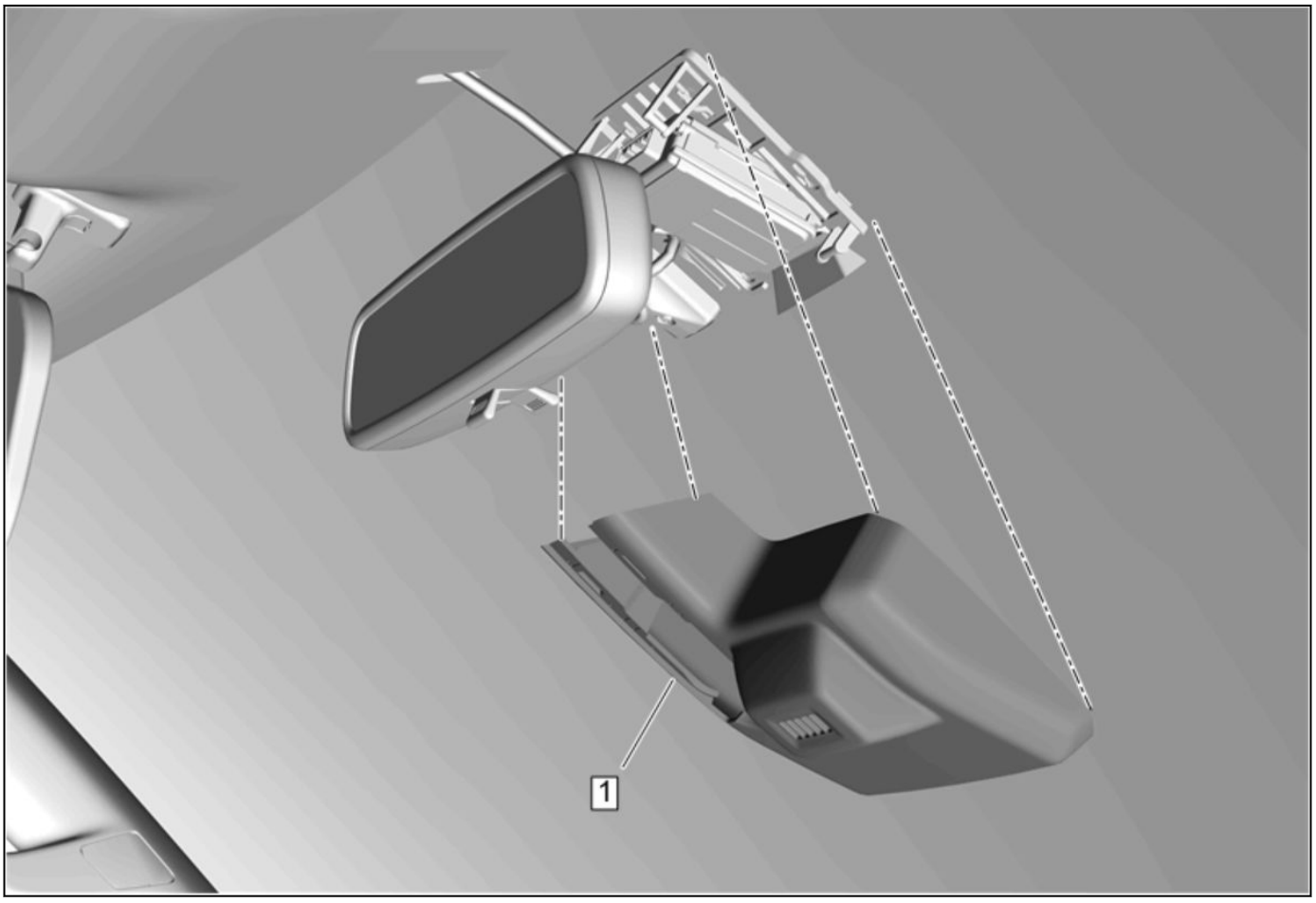

5133739

Windshield Multifunction Sensor Mount Bracket Cover Replacement

Callout	Component Name
Preliminary Procedure *Windshield Multifunction Sensor Mount Bracket Cover Insert Replacement 1-176*	
1	Windshield Multifunction Sensor Mount Bracket Cover **Procedure** Pull downward to remove windshield multifunction sensor mount bracket cover from windshield.

Windshield Multifunction Sensor Mount Bracket Cover Insert Replacement

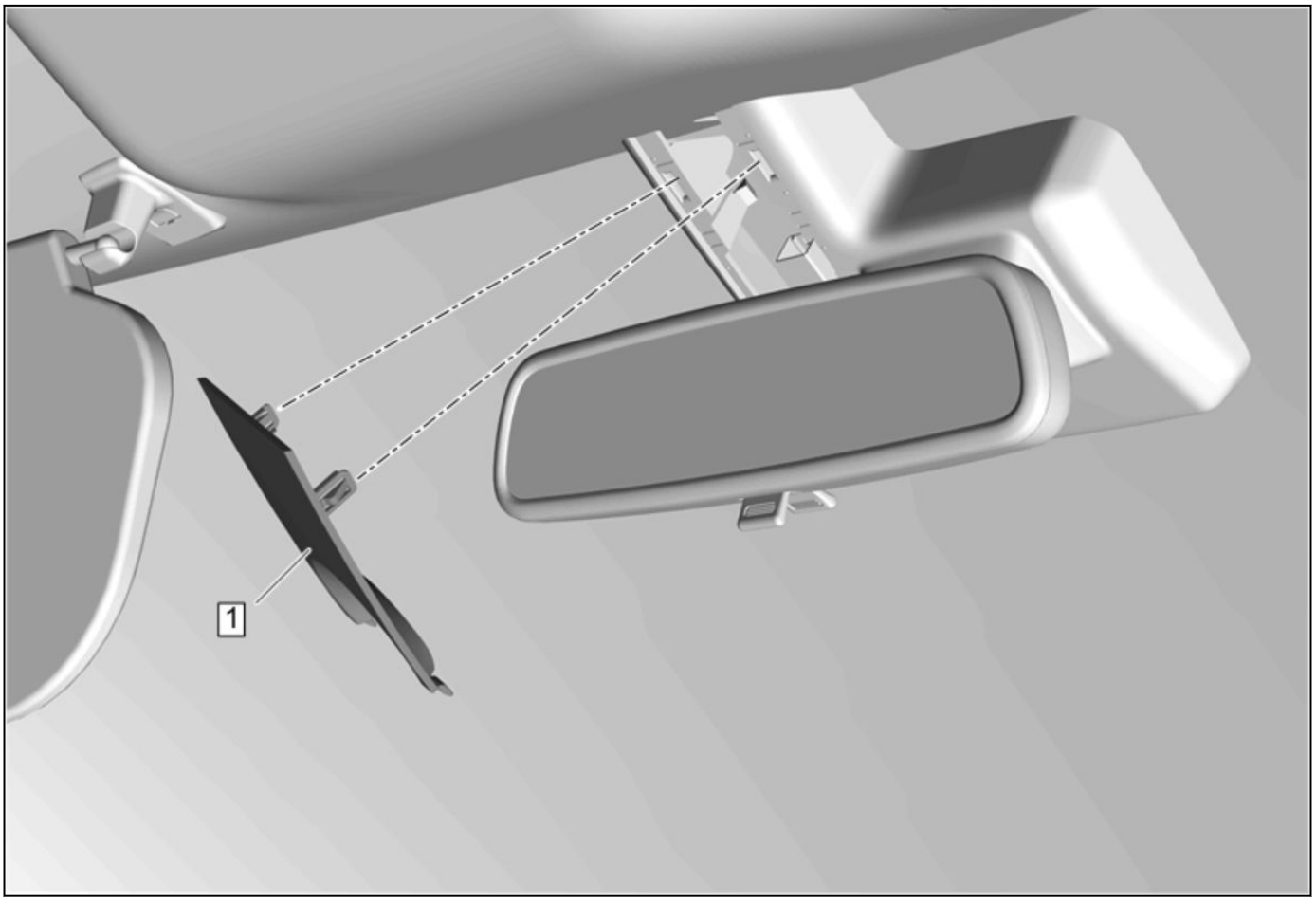

5133735

Windshield Multifunction Sensor Mount Bracket Cover Insert Replacement

Callout	Component Name
1	Windshield Multifunction Sensor Mount Bracket Cover Insert **Procedure** Using a plastic trim tool, carefully pry downward on the windshield multifunction sensor mount bracket cover insert to release from windshield multifunction sensor mount bracket cover.

Windshield Glass Cleaning

Exterior

Clean the windshield with windshield cleaner, GM P/N 19287404 (18 oz.) or 19259280 (6 oz.) (Canadian P/N 88865156) or equivalent. The cleaner should not harm the paint finish or scratch the glass. The glass is clean when the water no longer beads, but sheets across the entire glass surface.

Interior

The interior glass should be cleaned with plain water only applied with a clean terry cloth towel. Water only eliminates any film or haze on the window and helps prevent fogging.

Wiper Blade Element Cleaning

Lift each blade assembly off of the windshield and clean the element with a cloth saturated with full strength washer solvent. Then rinse the blade assemblies with water.

Wiper Chatter or Streak Repair

Some vehicles may exhibit a condition where the windshield wipers chatter and/or wipe unevenly. Several items may contribute to this condition. To completely repair this condition, ALL of the items listed should be tested and repaired as necessary.

- Perform the wiper arm pressure test. Refer to *Wiper Arm Tip Pressure Check 1-163*.
- Inspect the wiper blade element set. Refer to *Wiper Blade Element Check 1-163*.
- Clean the wiper blade elements. Refer to *Wiper Blade Element Cleaning 1-176*.
- Clean the windshield glass. Refer to *Windshield Glass Cleaning 1-176*.

Windshield Wiper Arm Adjustment

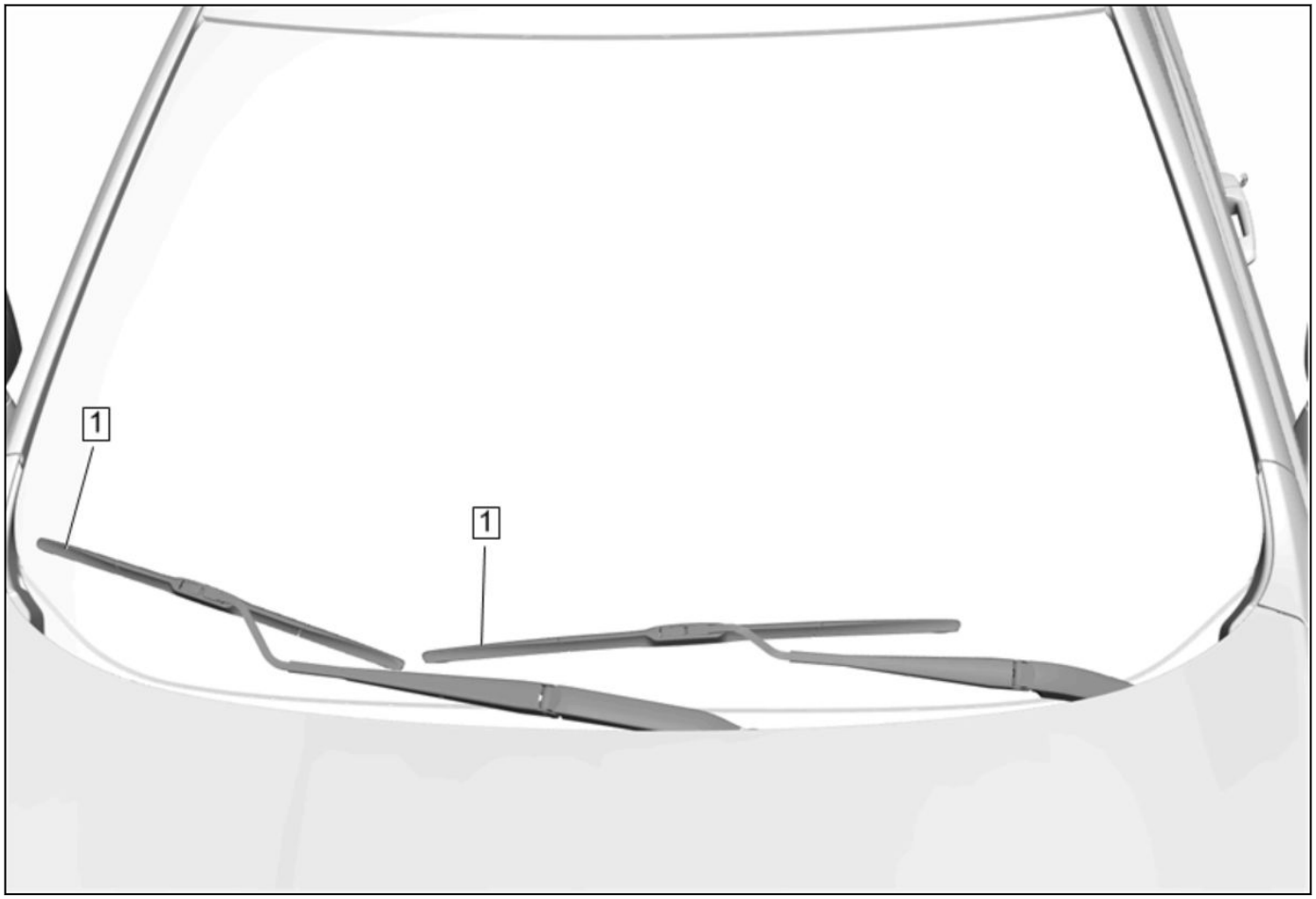

4281807

Windshield Wiper Arm Adjustment

Callout	Component Name
1	Windshield Wiper Arm **Procedure** 1. Lubricate the windshield with washer fluid. 2. Run the windshield wipers and turn off the windshield wipers. 3. Ensure the windshield wipers are in the full park position. 4. Inspect the windshield wipers for proper position to the circle on the windshield. 5. Realign the windshield wiper arm to the circle, if required. *Windshield Wiper Arm Replacement 1-171*

Special Tools and Equipment

Special Tools

Illustration	Tool Number/ Description
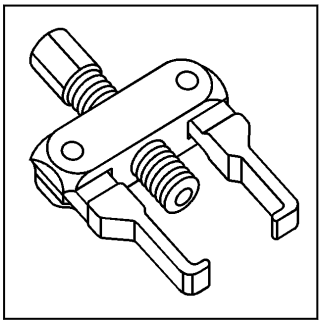 334259	J 39822 Wiper Arm Puller

Section 2

Driver Information and Entertainment

Cellular, Entertainment, and Navigation **2-2**

Specifications **2-2**

Fastener Specifications 2-2

Schematic and Routing Diagrams **2-2**

Radio/Navigation System Schematics 2-3

OnStar/Telematics Schematics 2-7

Repair Instructions **2-8**

Mobile Telephone Microphone Replacement 2-8

Communication Center Call Switch Replacement 2-9

Communication Interface Module Replacement 2-10

Communication Interface Module Bracket Replacement 2-11

Compact Disc Care and Cleaning 2-12

Radio Bracket Replacement 2-12

Radio Replacement 2-13

Digital Radio Receiver Replacement 2-14

Navigation Signal Splitter Replacement 2-15

Radio Antenna Replacement 2-16

Digital Radio, Mobile Telephone, and Vehicle Location Antenna Cable Replacement 2-17

Radio Antenna Cable Replacement 2-18

High Frequency Antenna Replacement 2-22

USB Receptacle Replacement 2-23

Radio Front Side Door Speaker Replacement 2-24

Radio Rear Speaker Replacement - Lower 2-25

Radio Rear Speaker Replacement - Upper 2-26

Instrument Panel Center Accessory Function Switch Replacement 2-27

Displays and Gauges **2-28**

Specifications **2-28**

Fastener Specifications 2-28

Schematic and Routing Diagrams **2-28**

Instrument Cluster Schematics 2-29

Audible Warnings Schematics 2-32

Repair Instructions **2-33**

Ambient Air Temperature Gauge Sensor Replacement 2-33

Compass Module Replacement 2-34

Driver Information Display Switch Replacement 2-35

Instrument Cluster Replacement 2-36

Image Display Cameras **2-37**

Specifications **2-37**

Fastener Specifications 2-37

Schematic and Routing Diagrams **2-37**

Image Display Camera Schematics 2-38

Repair Instructions **2-40**

Rearview Camera Image Display Module Replacement 2-40

Driver Information and Entertainment

Cellular, Entertainment, and Navigation

Specifications

Fastener Specifications

Single Use Non-Threaded Fasteners/Components

Note: All fasteners/components listed in this table MUST BE DISCARDED and replaced with NEW after removal.
Application
High Frequency Antenna Retainer

Reusable Threaded Fastener Tightening Specifications

Note: All fasteners listed in this table can be reused after removal.	
Application	**Specification**
	Metric (English)
Communication Center Call Switch Bolt	2.5 N•m (22 lb in)
Communication Interface Module Bracket Bolt	2.5 N•m (22 lb in)
High Frequency Antenna Bolt	9 N•m (80 lb in)
Navigation Signal Splitter Bracket Bolt	2.5 N•m (22 lb in)
Radio Antenna Base Bolt	9 N•m (80 lb in)
Radio Bracket Bolt	2.5 N•m (22 lb in)
Radio Control Bolt	2.5 N•m (22 lb in)
Radio Control Switch Bolt	1 N•m (9 lb in)
Radio Rear Speaker Bolt	2 N•m (18 lb in)
Radio Rear Speaker Housing Nut	6 N•m (53 lb in)

Schematic and Routing Diagrams

Radio/Navigation System Schematics (Power, Ground, Serial Data, Microphone, and Front Speakers)

7085684

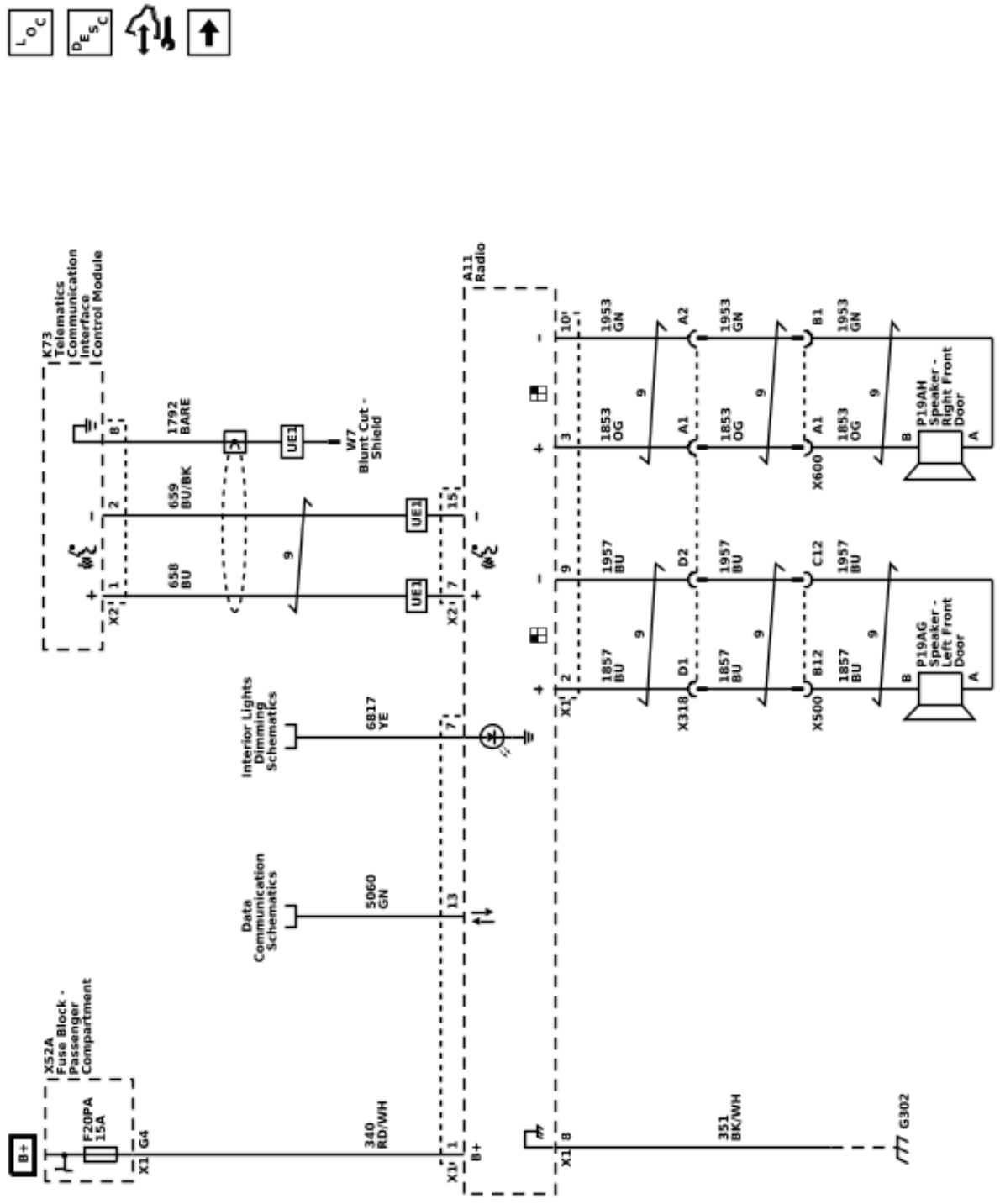

7085685

Radio/Navigation System Schematics (Antennas)

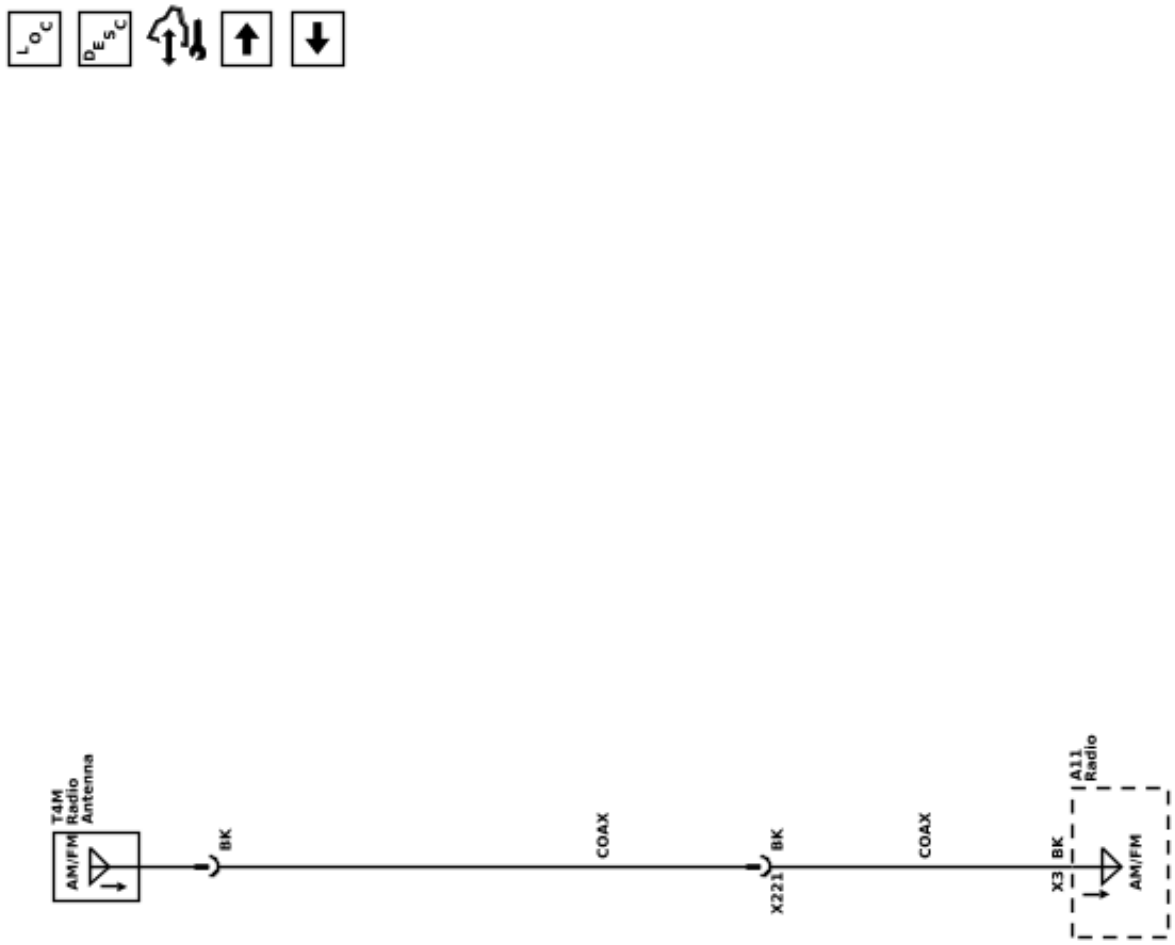

Radio/Navigation System Schematics (Rear Speaker Outputs)

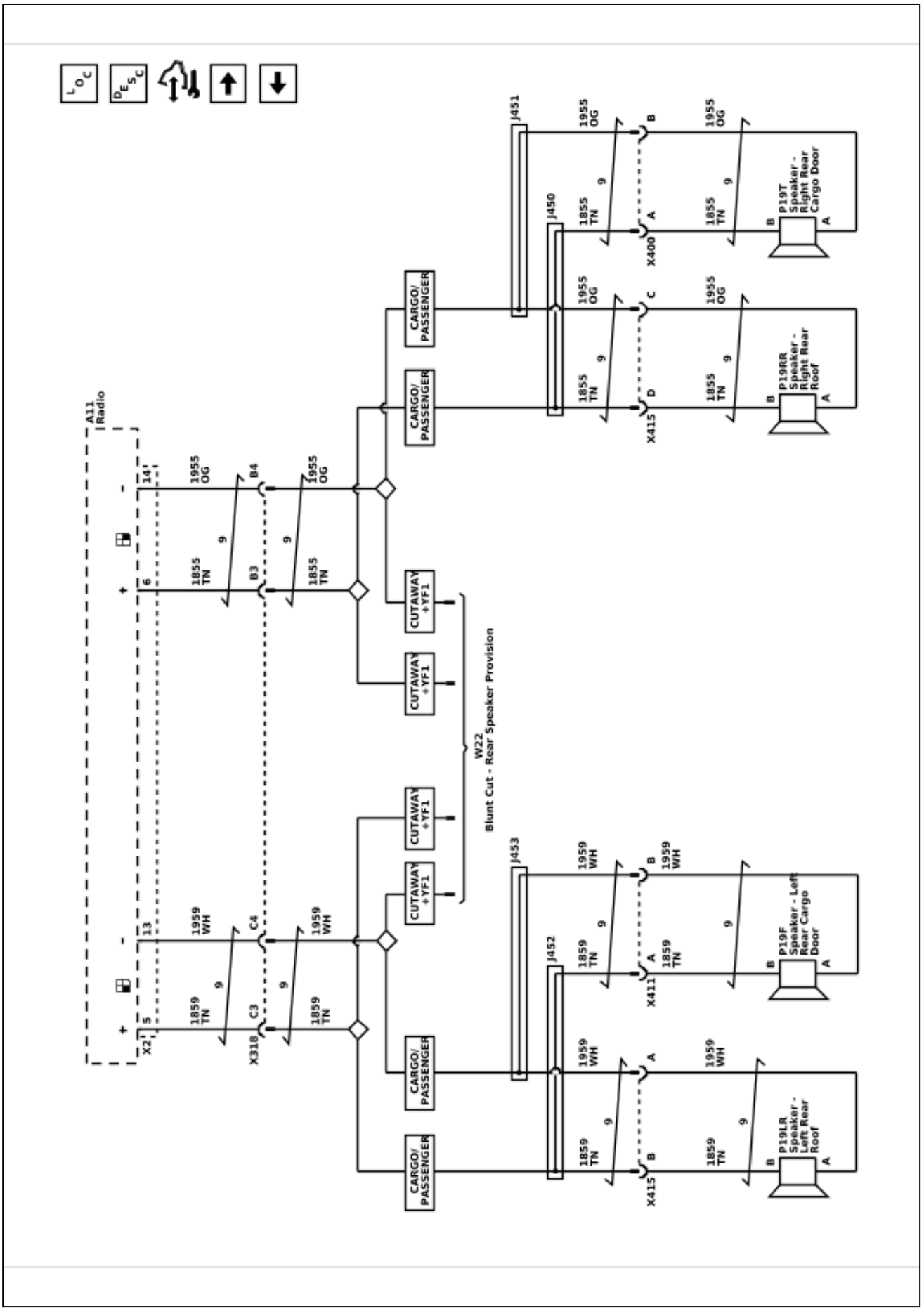

7085687

Radio/Navigation System Schematics (Steering Wheel Radio Redundant Controls)

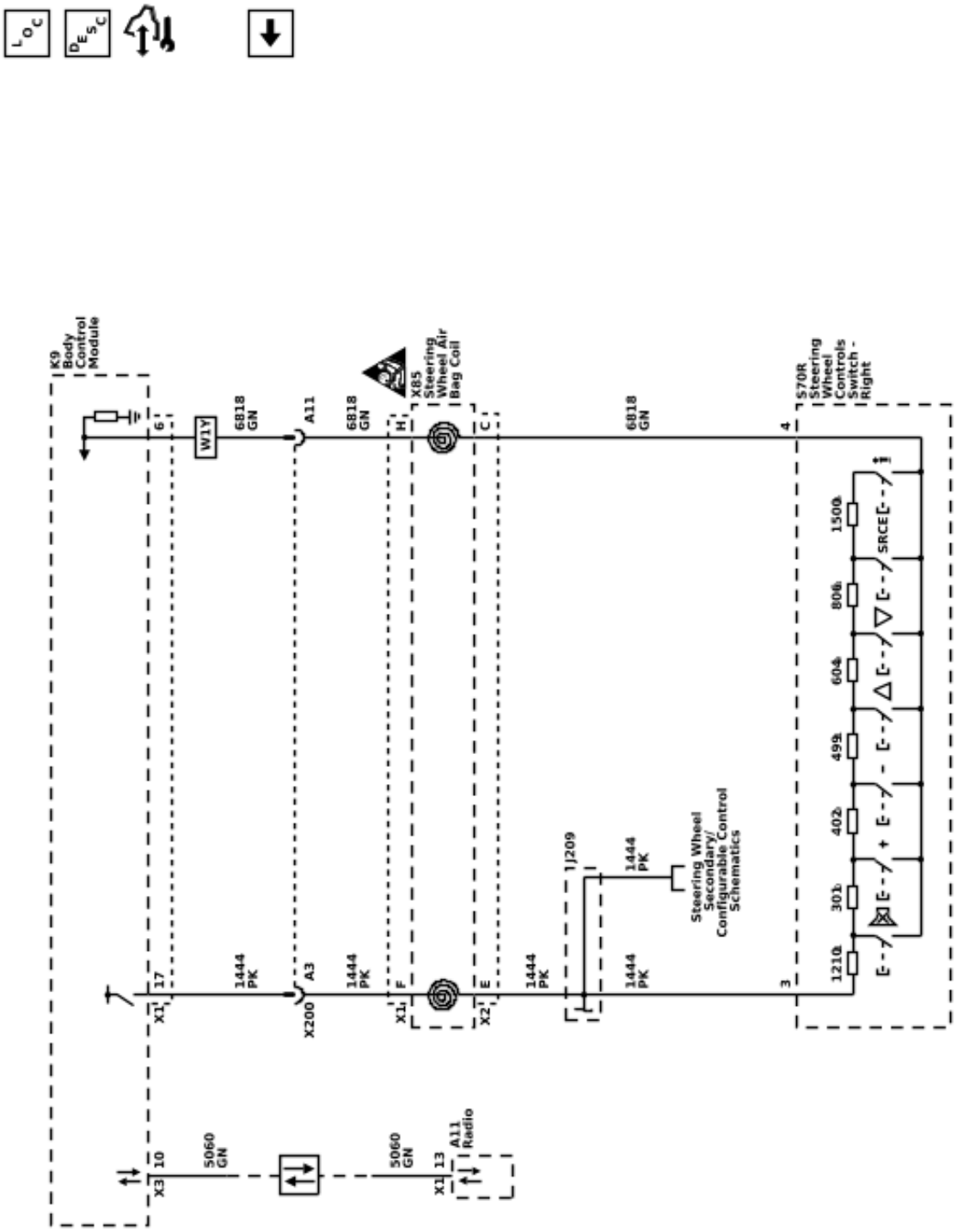

7085688

OnStar/Telematics Schematics (OnStar Module (UE1))

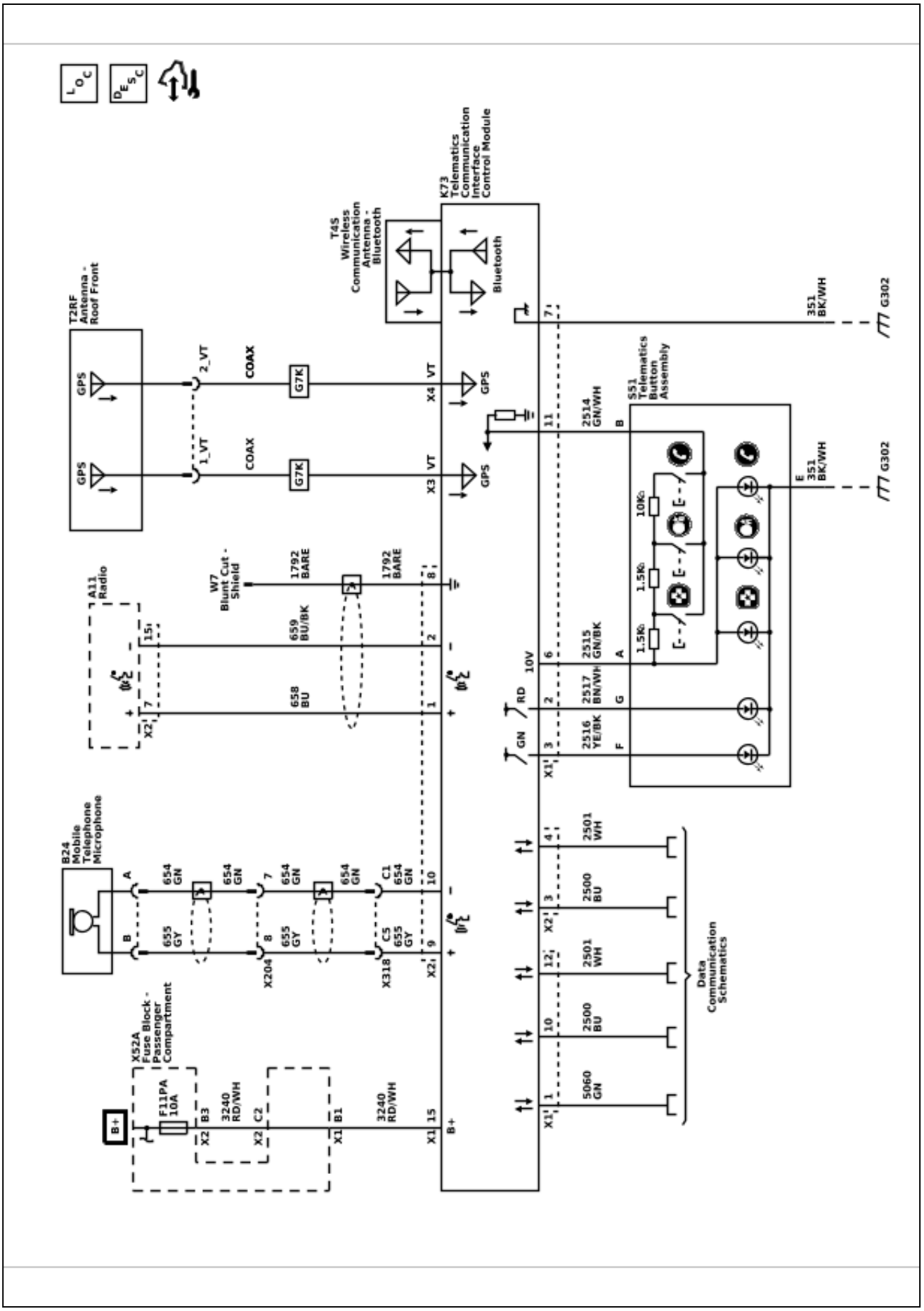

Repair Instructions

Mobile Telephone Microphone Replacement

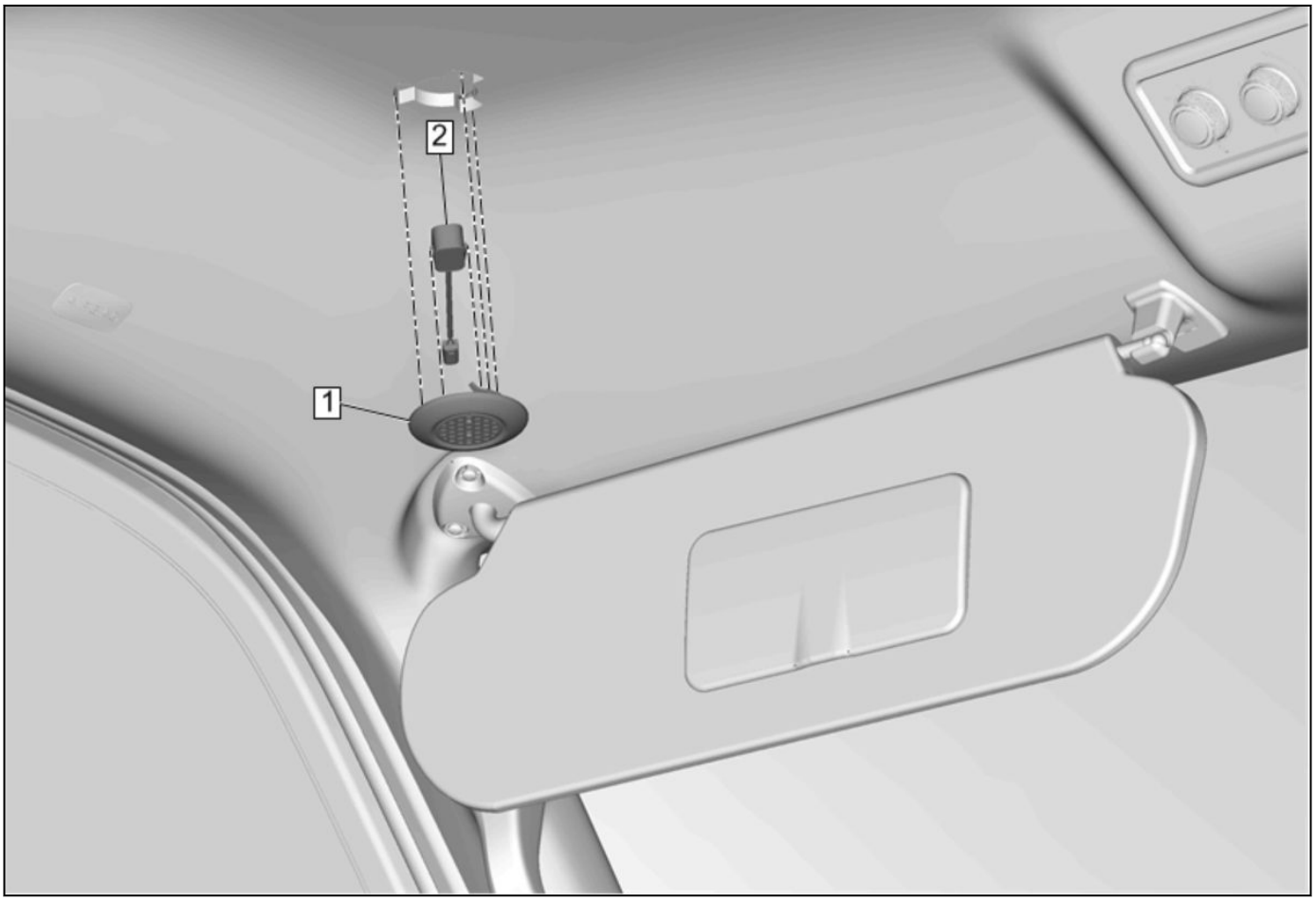

4842024

Mobile Telephone Microphone Replacement

Callout	Component Name
Preliminary Procedure It is only necessary to lower the headlining. Only do those steps in the headlining procedure that will allow access to the component being removed. [Link target (target-id 148367-) not found]	
1	Mobile Telephone Microphone Bezel **Procedure** Release the retaining tabs.
2	Mobile Telephone Microphone **Procedure** 1. Disconnect the electrical connector. 2. Release the retaining tabs.

Communication Center Call Switch Replacement

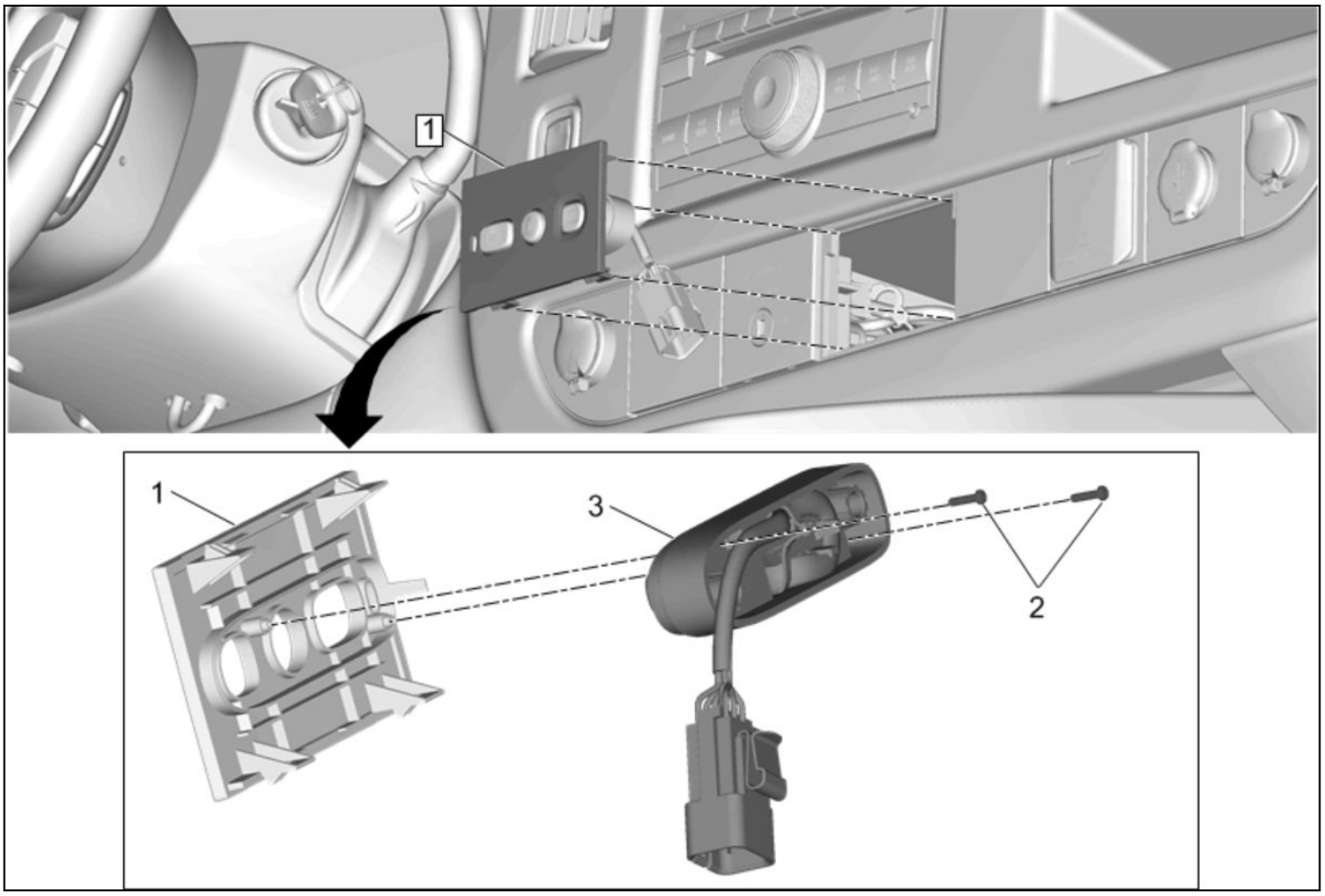

4842644

Communication Center Call Switch Replacement

Callout	Component Name
Preliminary Procedure [Link target (target-id 51637-) not found]	
1	Communication Center Call Switch Bezel
2	Communication Center Call Switch Bolt [2x] **Caution:** Refer to [Link target (target-id 178169-) not found] . **Tighten** 2.5 N•m (22 lb in)
3	Communication Center Call Switch **Procedure** Disconnect the electrical connector.

Communication Interface Module Replacement

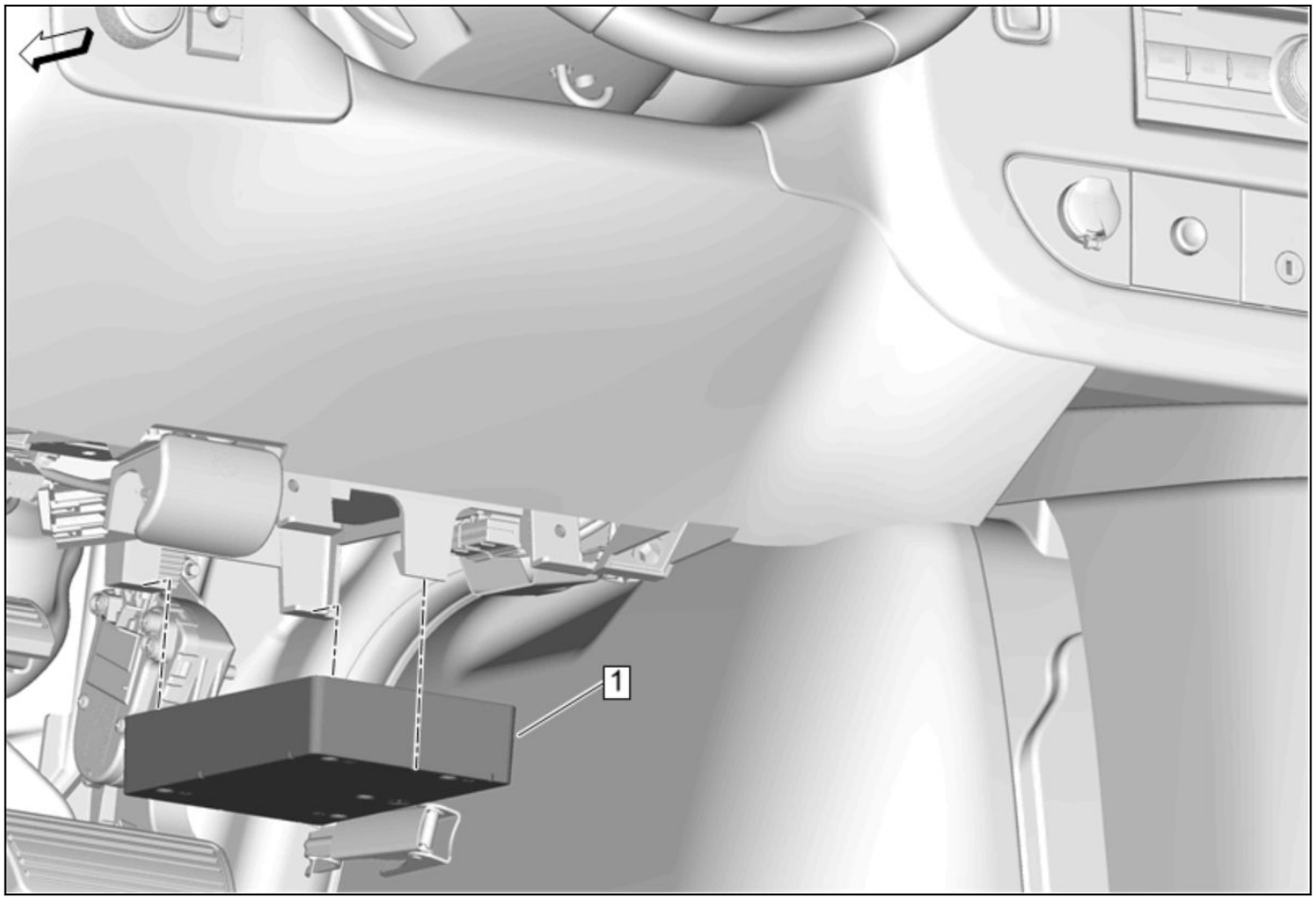

4830998

Communication Interface Module Replacement

Callout	Component Name
1	Communication Interface Module **Procedure** 1. Release the retaining tab. 2. Disconnect the electrical connectors. 3. Perform the necessary programming and setup procedures: [Link target (target-id 72864-) not found]

Communication Interface Module Bracket Replacement

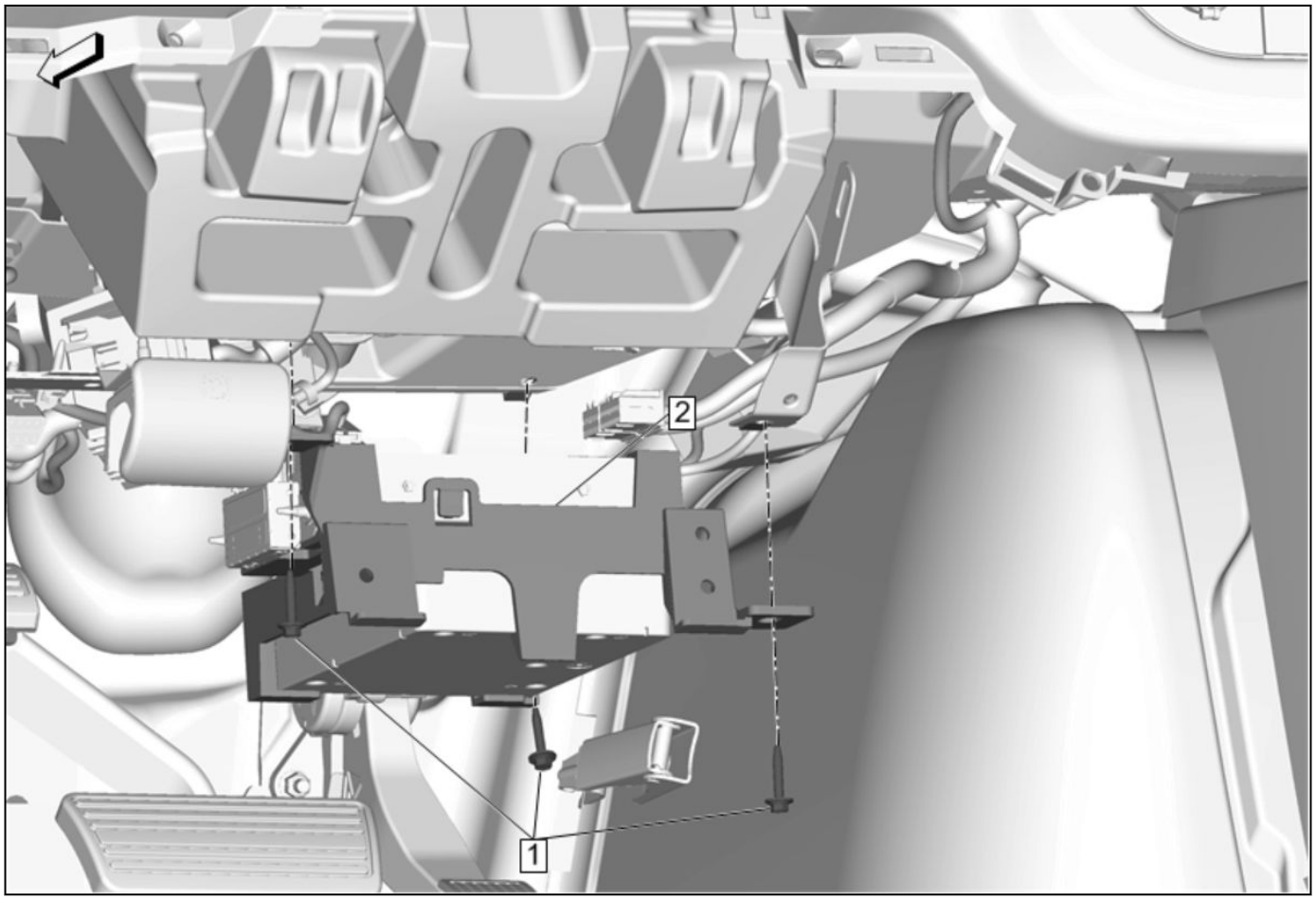

4840170

Communication Interface Module Bracket Replacement

Callout	Component Name
Preliminary Procedure [Link target (target-id 218531-) not found]	
1	Communication Interface Module Bracket Bolt [3x] **Caution:** [Link target (target-id 178169-) not found] **Tighten** 2.5 N•m (22 lb in)
2	Communication Interface Module Bracket **Procedure** 1. Disconnect the electrical connectors. 2. Transfer components as necessary.

Compact Disc Care and Cleaning

Care of CDs

Handle CDs carefully. Store them in their original cases or other protective cases and away from direct sunlight and dust. The CD player scans the bottom surface of the disc. If the surface of a CD is damaged, such as cracked, broken, scratched, or wrinkled labeling, the CD will not play properly or not at all. If the surface of a CD is soiled, take a soft, lint free cloth or dampen a clean, soft cloth in a mild, neutral detergent solution mixed with water, and clean it. Make sure the wiping process starts from the center to the edge. Do not touch the bottom side of a CD while handling it. This could damage the surface. Pick up CDs by grasping the outer edges or the edge of the hole and the outer edge.

Care of the CD Player

The use of CD lens cleaners for CD players is not advised, due to the risk of contaminating the internal lens of the CD optics with lubricants.

Stuck CDs

Interrupting the battery power by pulling the fuse will sometimes release a stuck CD. If a CD is stuck, and removed, inspect it for warps, cracks, etc. If the CD is damaged, do not replace the radio.

Labeling CDs

Paper labels can eventually warp and wrinkle, and this will cause the disc to jam inside the CD player. Try labeling the top of the discs with a soft magic marker instead.

Radio Bracket Replacement

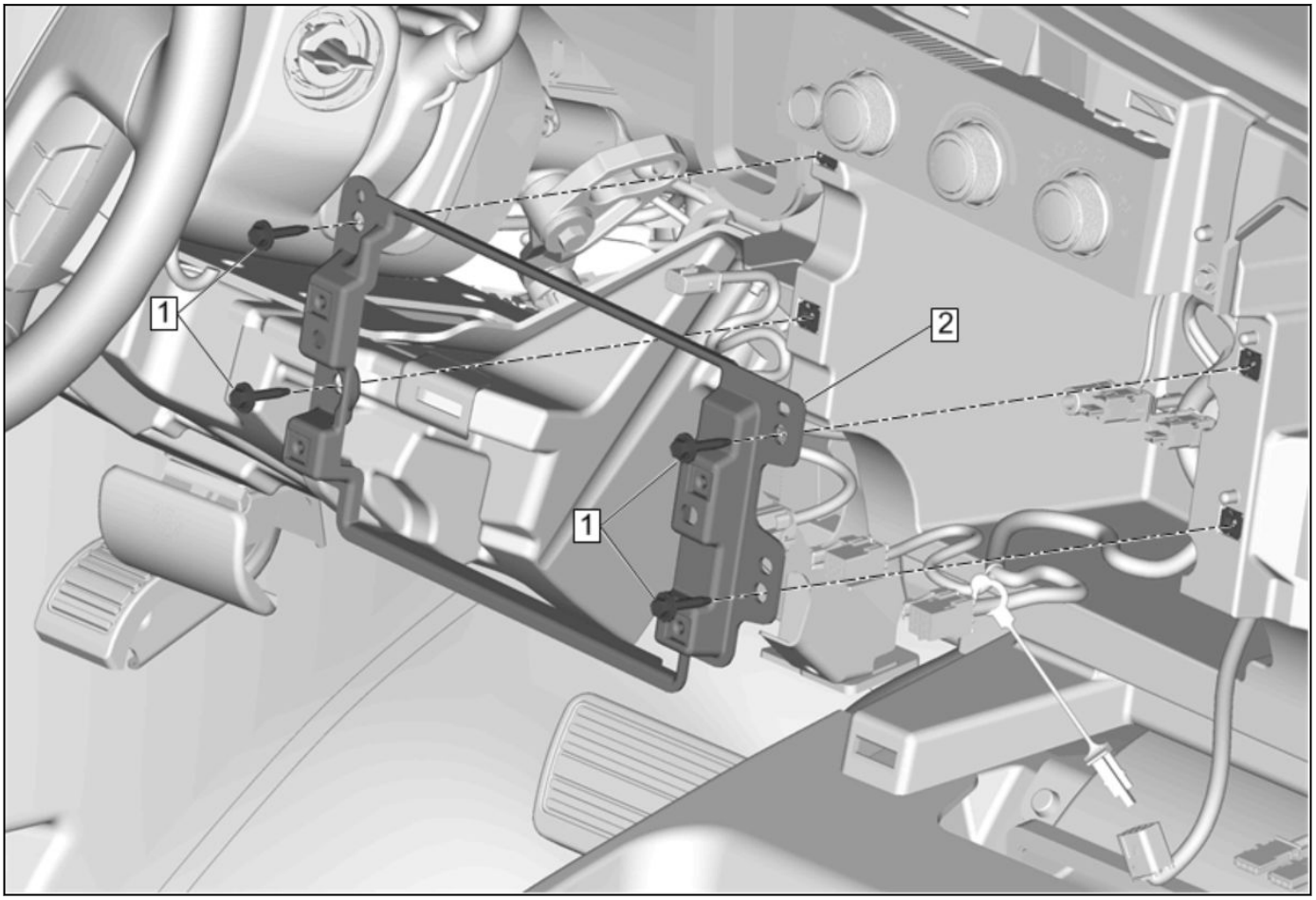

4833103

Radio Bracket Replacement

Callout	Component Name
Preliminary Procedure *Radio Replacement 2-13*	
1	Radio Bracket Bolt [4x] **Caution:** [Link target (target-id 178169-) not found] **Tighten** 2.5 N•m (22 lb in)
2	Radio Bracket

Radio Replacement

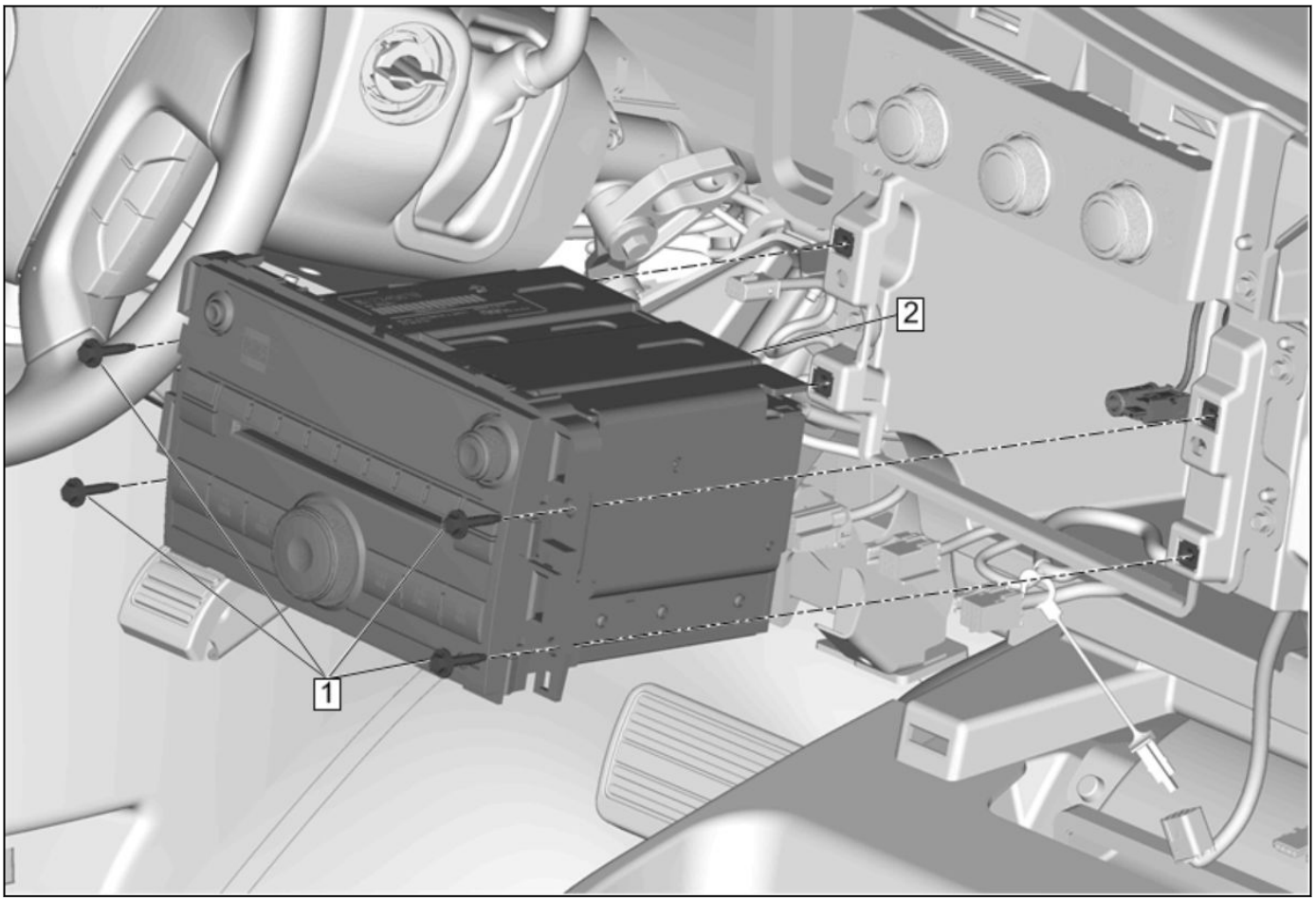

4831195

Radio Replacement

Callout	Component Name
Preliminary Procedure [Link target (target-id 167815-) not found]	
1	Radio Control Bolt[4x] **Caution:** [Link target (target-id 178169-) not found] **Tighten** 2.5 N•m (22 lb in)
2	Radio **Procedure** 1. Disconnect the electrical connectors. 2. Perform the necessary programming and setup procedures: [Link target (target-id 72864-) not found]

Digital Radio Receiver Replacement

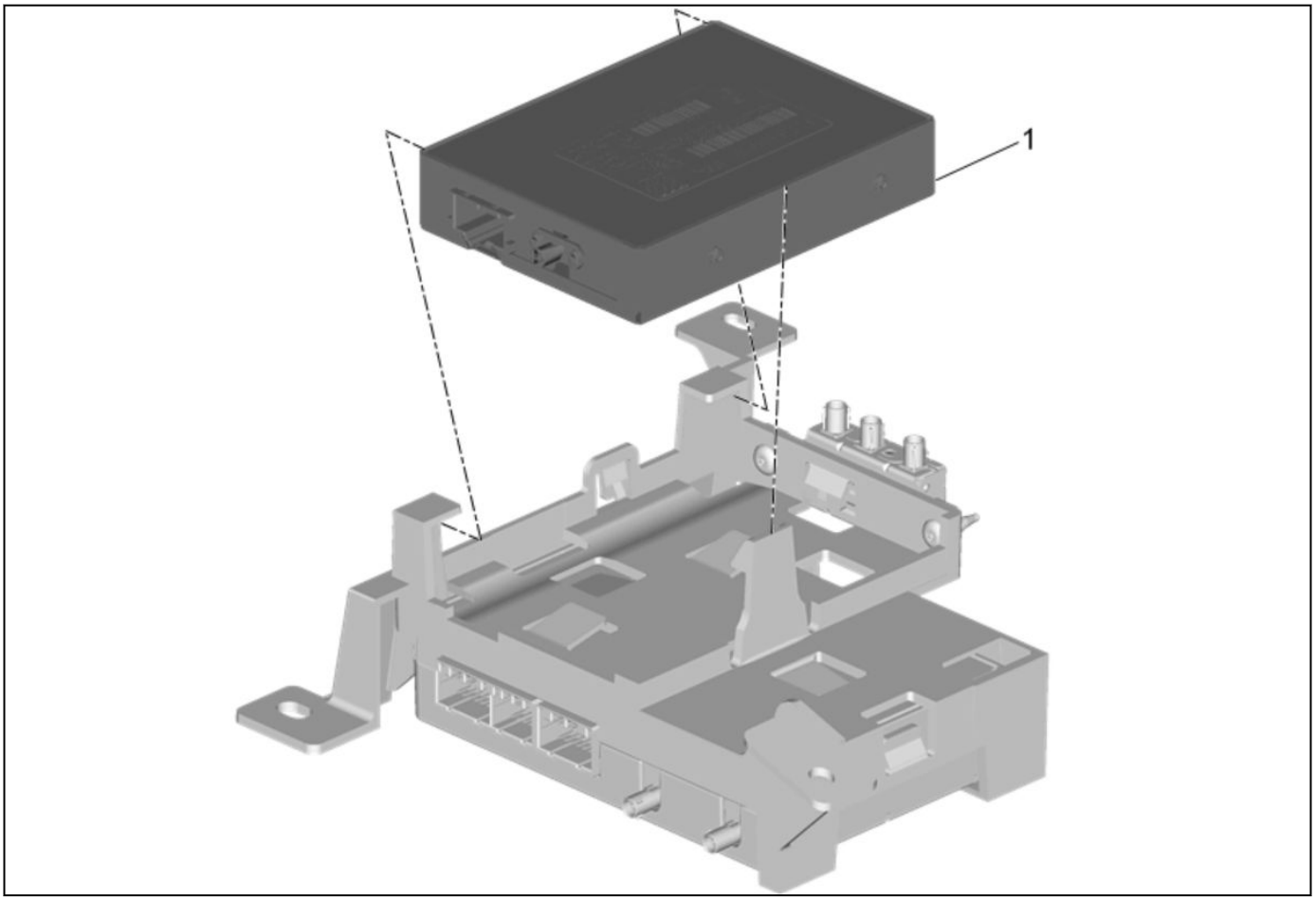

4842682

Digital Radio Receiver Replacement

Callout	Component Name
Preliminary Procedure *Communication Interface Module Bracket Replacement 2-11*	
1	Digital Radio Receiver **Procedure** 1. Release the retaining tab. 2. Perform the necessary programming and setup procedures: [Link target (target-id 72864-) not found]

Navigation Signal Splitter Replacement

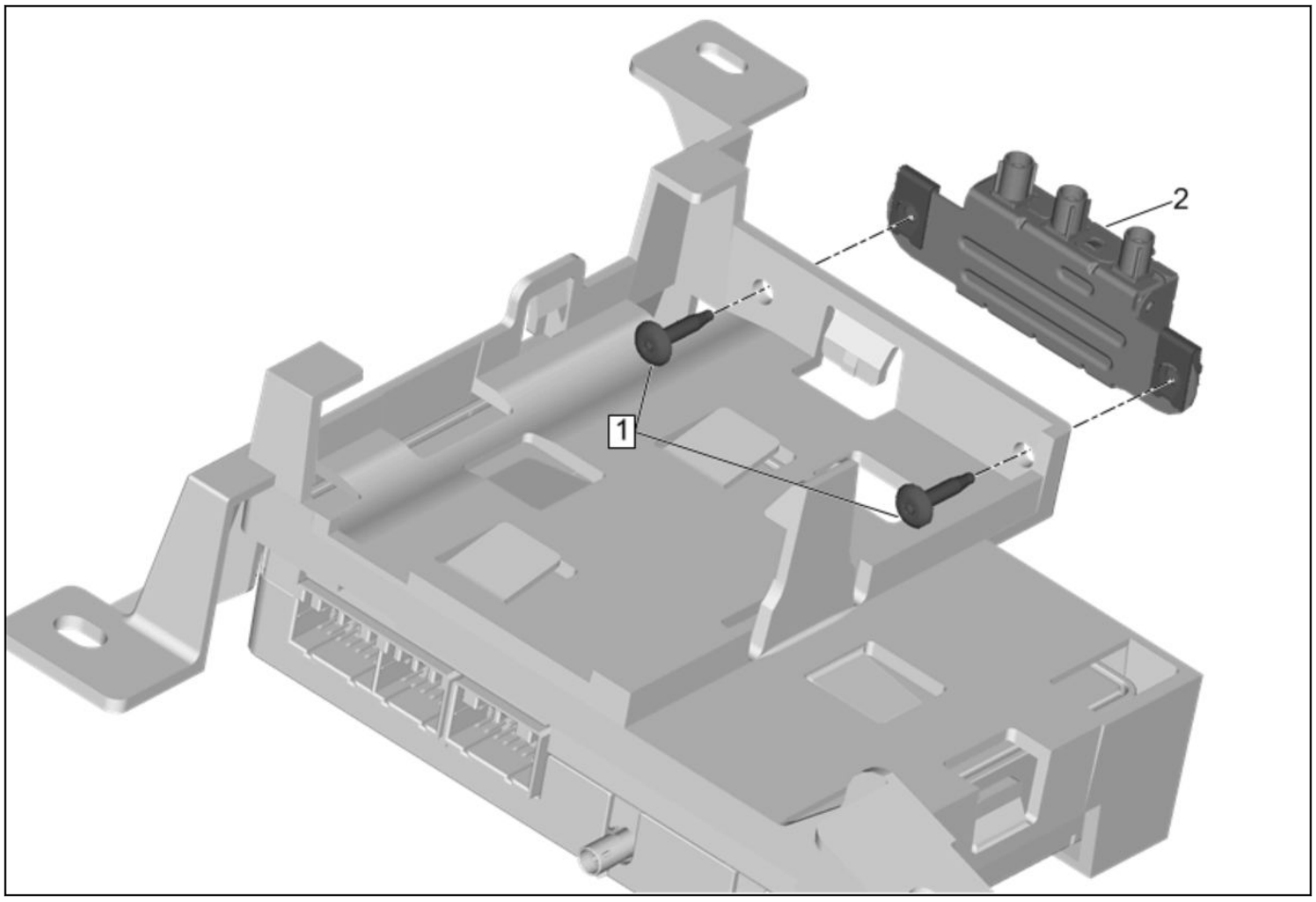

4840201

Navigation Signal Splitter Replacement

Callout	Component Name
Preliminary Procedure *Digital Radio Receiver Replacement 2-14*	
1	Navigation Signal Splitter Bracket Bolt [2x] **Caution:** [Link target (target-id 178169-) not found] **Tighten** 2.5 N•m (22 lb in)
2	Navigation Signal Splitter

Radio Antenna Replacement

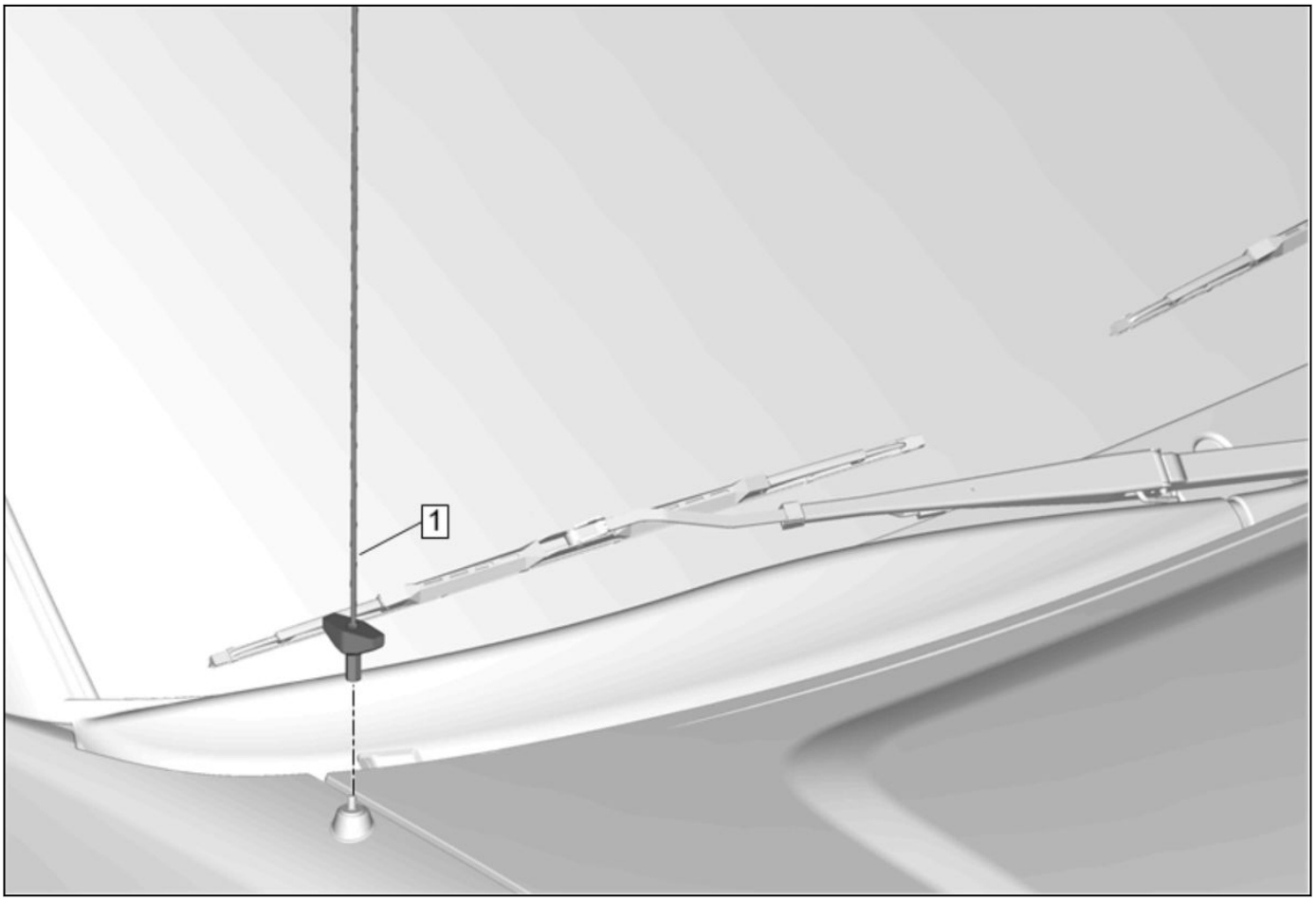

4841263

Radio Antenna Replacement

Callout	Component Name
1	Radio Antenna

Digital Radio, Mobile Telephone, and Vehicle Location Antenna Cable Replacement

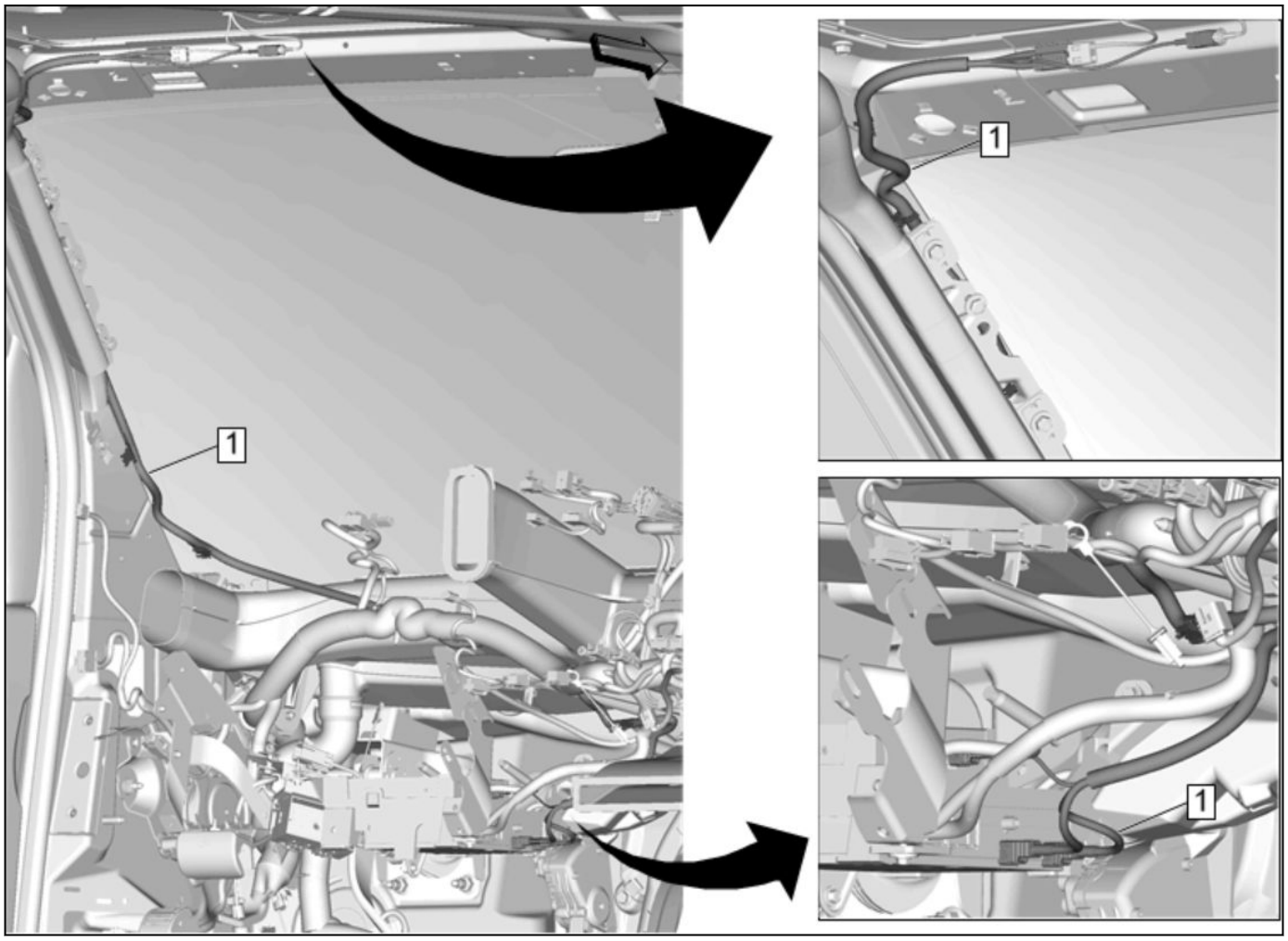

4848374

Digital Radio, Mobile Telephone, and Vehicle Location Antenna Cable Replacement

Callout	Component Name
Preliminary Procedures 1. *Radio Replacement 2-13* 2. [Link target (target-id 157423-) not found] 3. It is only necessary to lower the headlining. Only do those steps in the headlining procedure that will allow access to the component being removed. [Link target (target-id 148367-) not found]	
1	Digital Radio and Mobile Telephone and Vehicle Location Antenna Cable **Note:** Prior to removal, note the routing of the antenna cable to aid in reassembly and ensure proper installation. **Procedure** 1. Disconnect the electrical connectors. 2. Release the cable.

Radio Antenna Cable Replacement

Removal Procedure

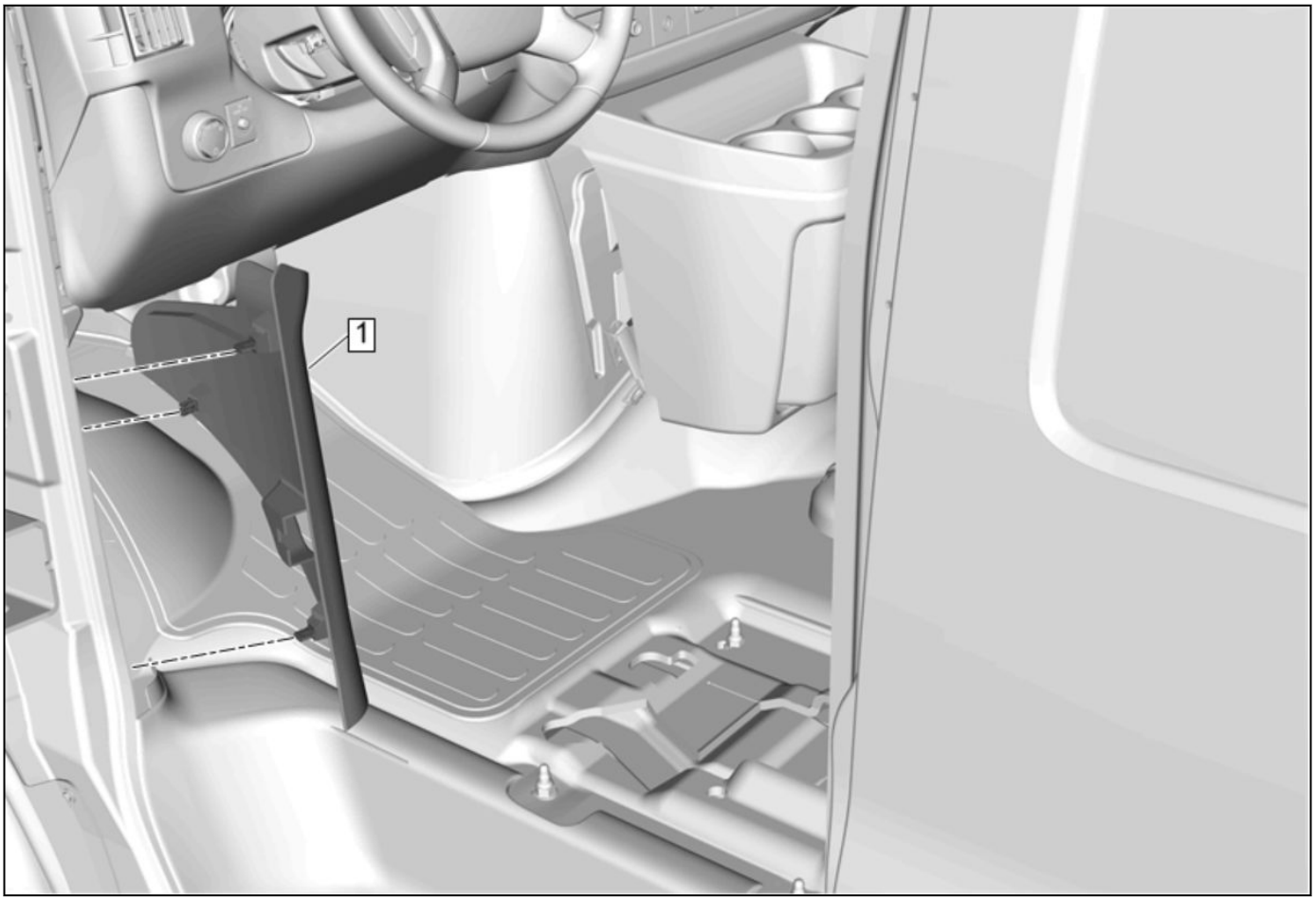

4854633

1. Body Hinge Pillar Garnish Molding - Right Side(1) » Remove— [Link target (target-id 51645-) not found]

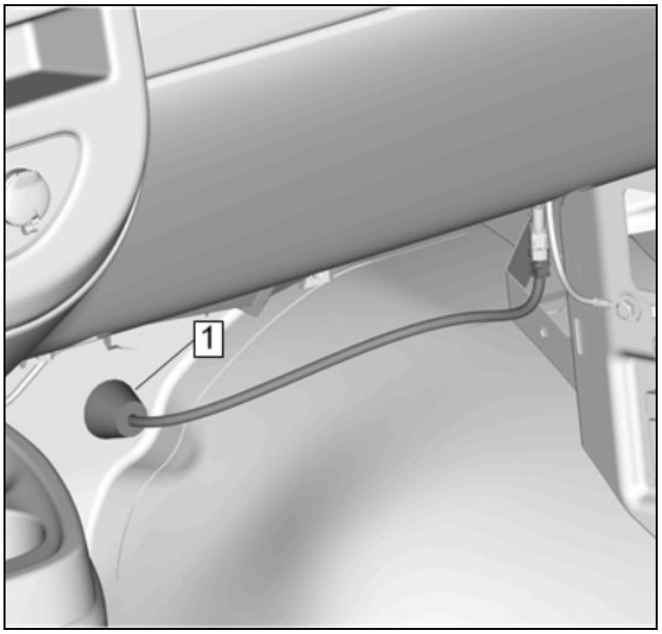

4846457

2. Disconnect the electrical connector.
3. Reposition the front floor panel carpet as necessary.
4. Release the radio antenna cable grommet (1).
5. Attach mechanics wire to the cable.

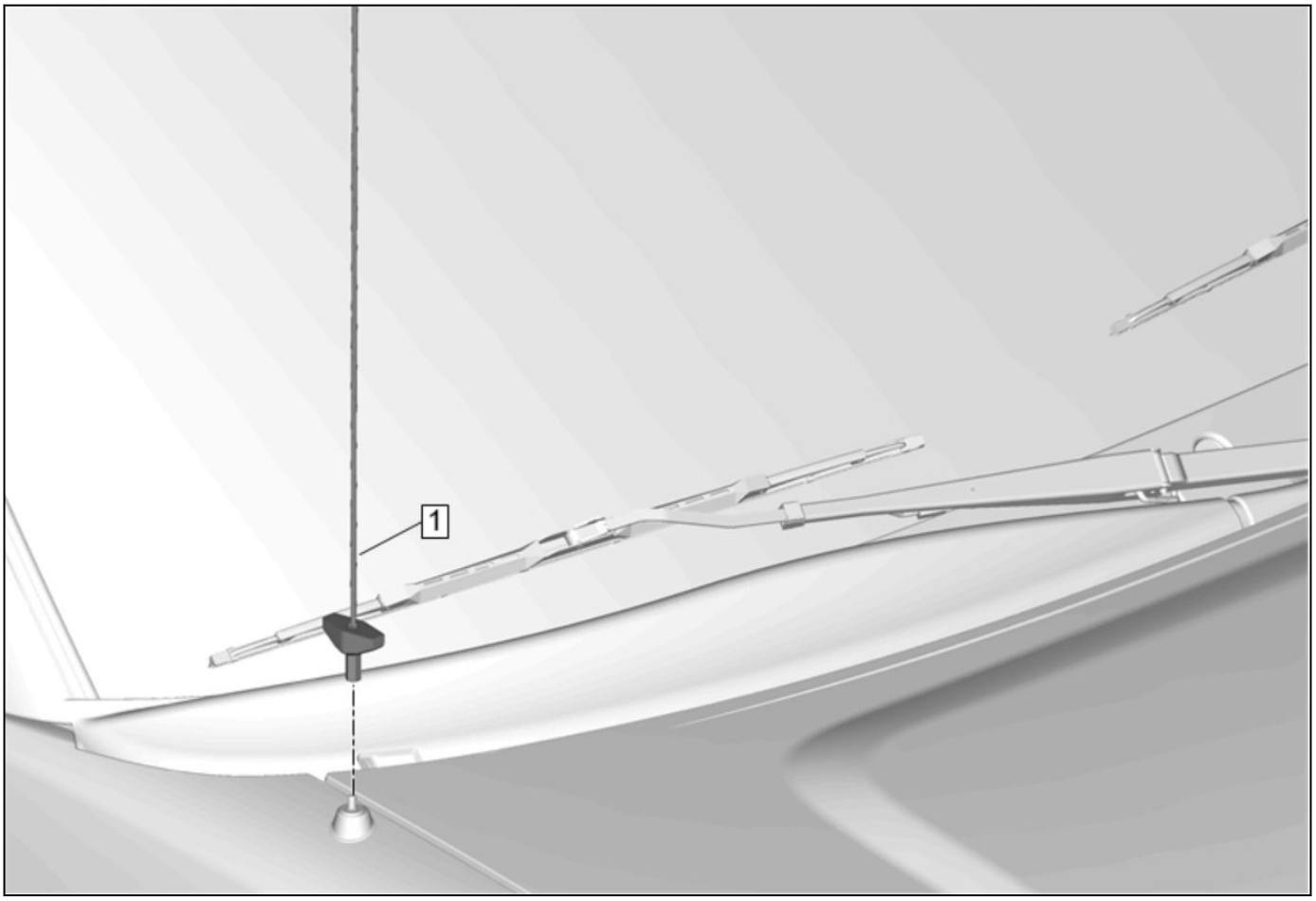

4841263

6. Radio Antenna (1) » Remove— *Radio Antenna Replacement 2-16*

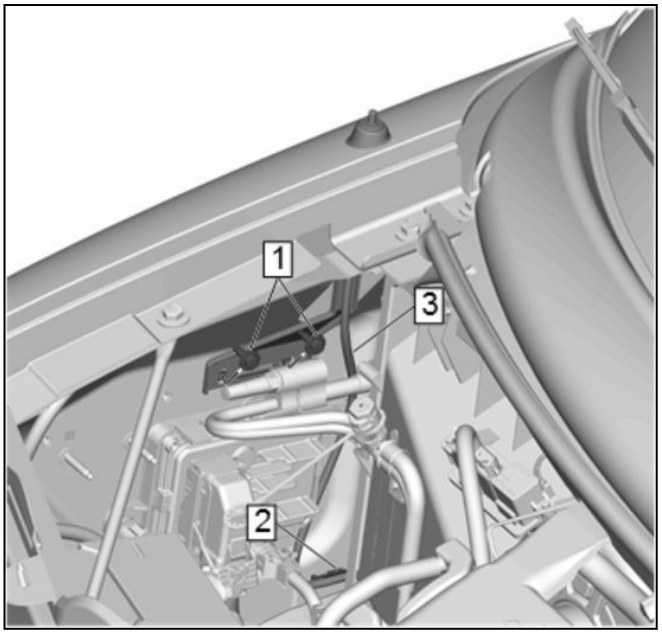

4846463

7. Radio Antenna Base Bolt (1) » Remove[2x]
8. Retainer (2) » Release
9. Radio Antenna Cable (3) » Remove

Installation Procedure

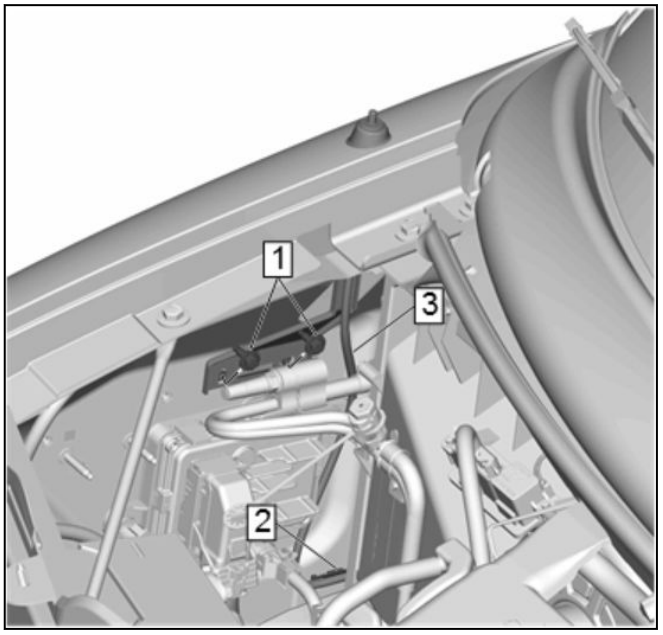

4846463

1. Attach the mechanics wire to the new radio antenna cable (3) and guide in.

2. Retainer (2) » Install

Caution: [Link target (target-id 178169-) not found]

3. Radio Antenna Base Bolt (1) » Install and tighten[2x] **9** N•m **(80 lb in)**

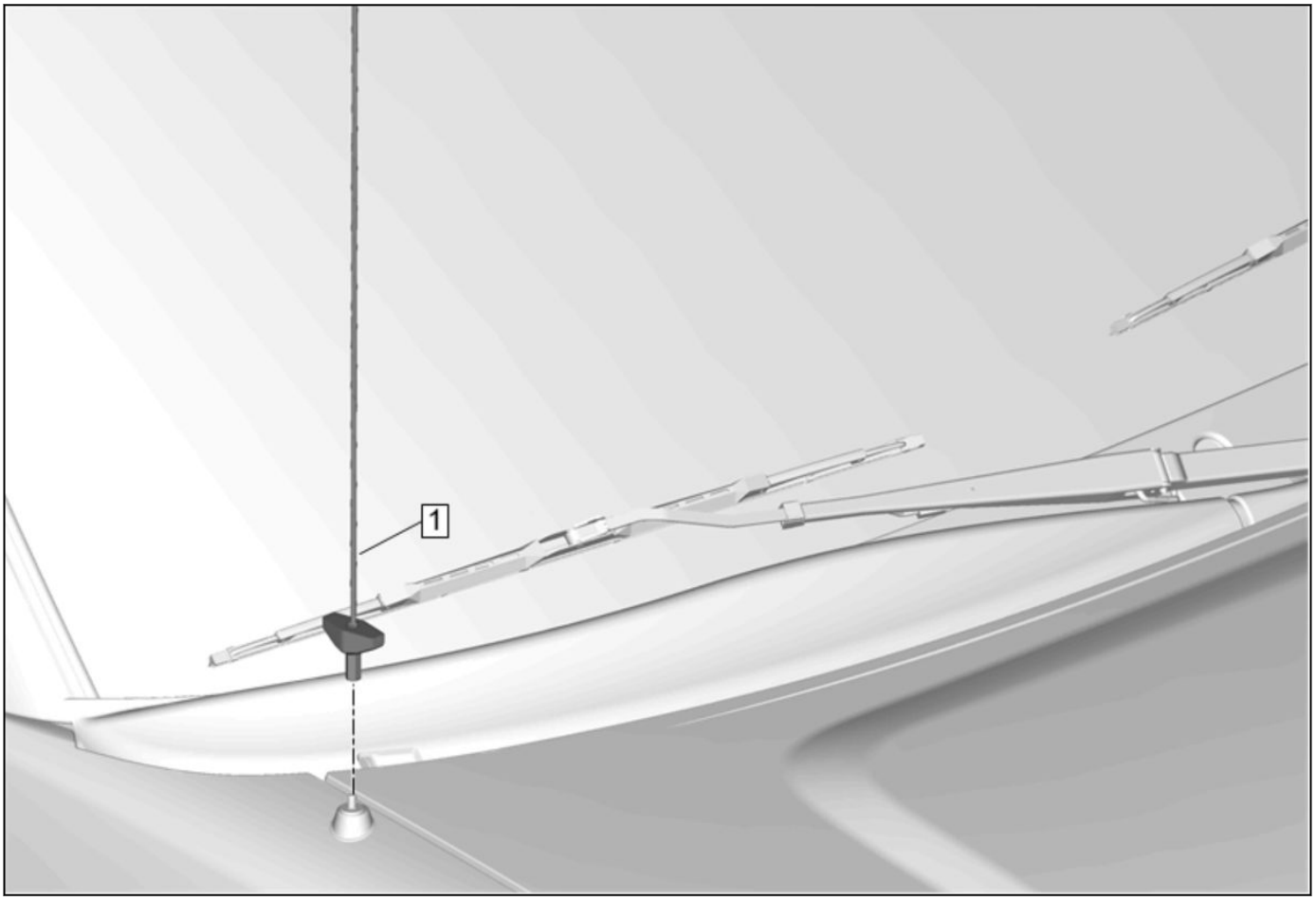

4841263

4. Radio Antenna (1) » Install— *Radio Antenna Replacement 2-16*

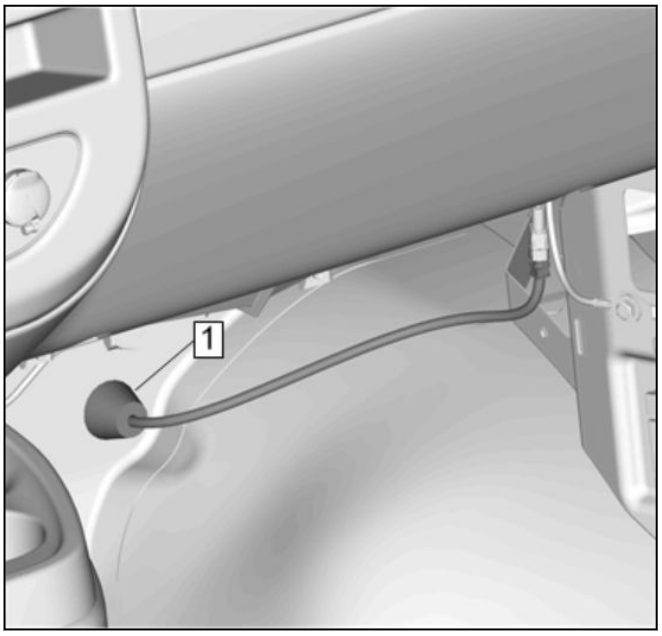

4846457

5. Radio Antenna Cable Grommet (1) » Install
6. Connect the electrical connector.
7. Front Floor Panel Carpet » Install

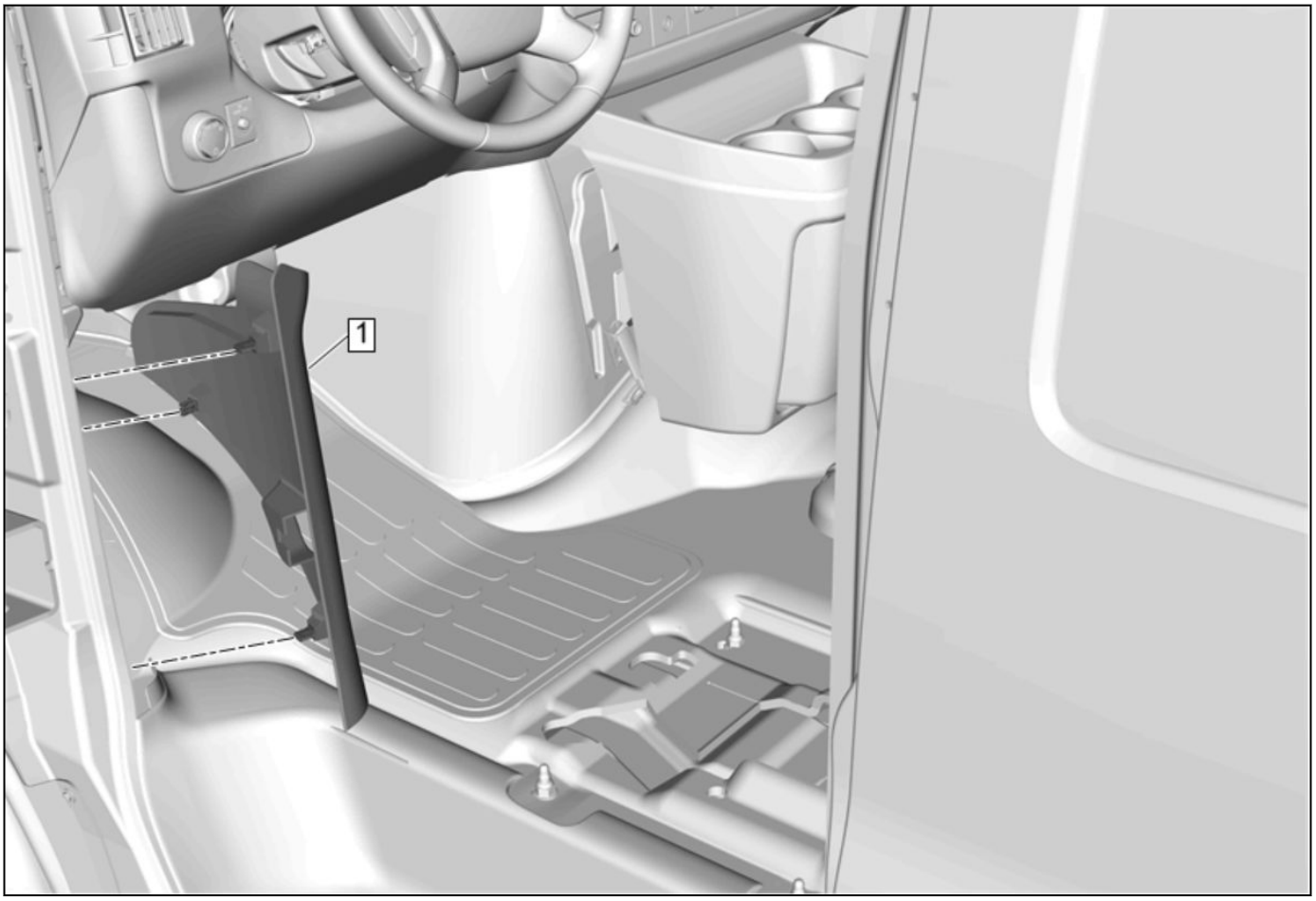

4854633

8. Body Hinge Pillar Garnish Molding - Right Side(1) » Install— [Link target (target-id 51645-) not found]

High Frequency Antenna Replacement

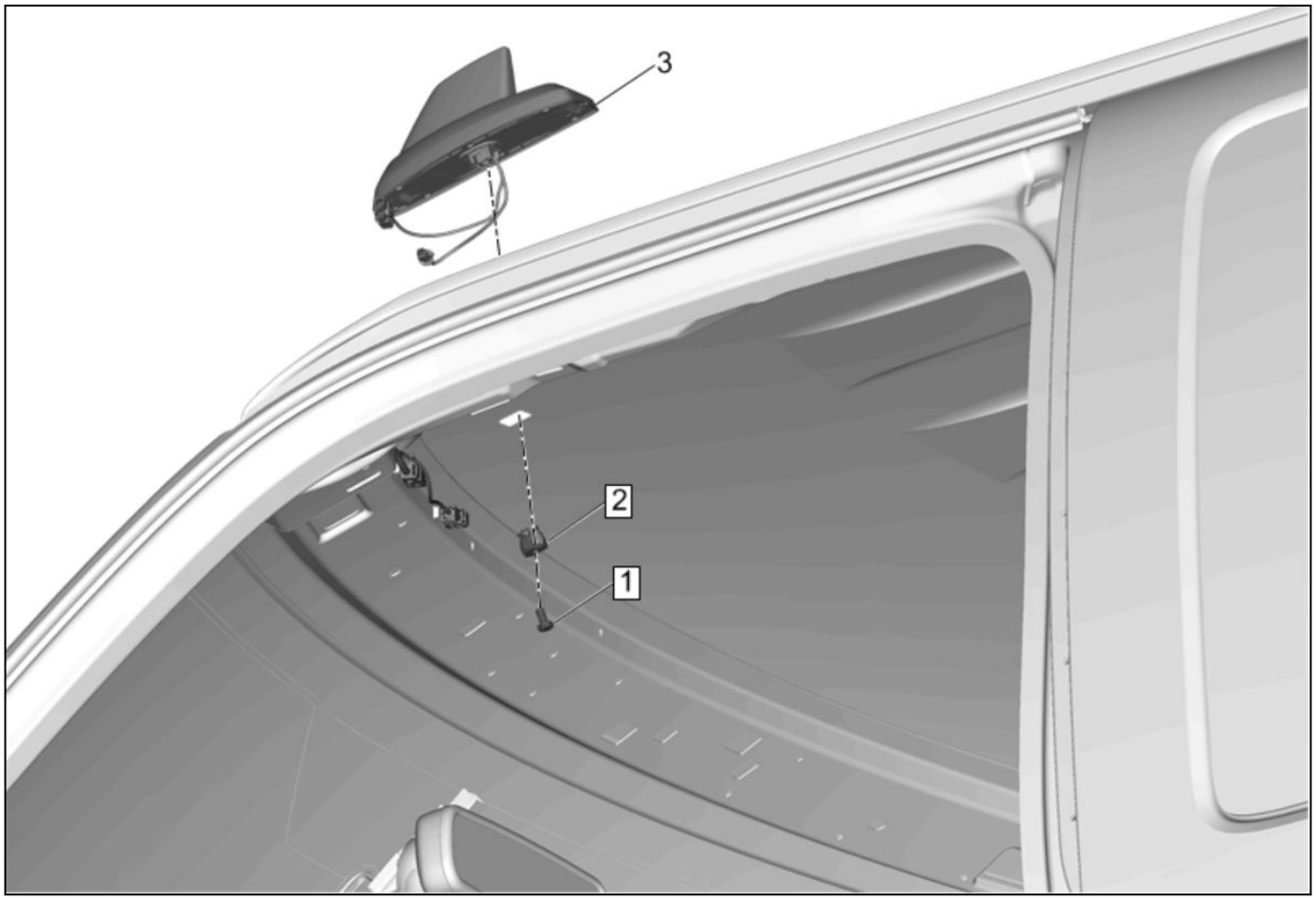

4846211

High Frequency Antenna Replacement

Callout	Component Name
Preliminary Procedure It is only necessary to lower the headlining. Only do those steps in the headlining procedure that will allow access to the component being removed. [Link target (target-id 148367-) not found]	
1	High Frequency Antenna Bolt **Caution:** [Link target (target-id 178169-) not found] **Tighten** 9 N•m (80 lb in)
2	High Frequency Antenna Retainer **Note:** Discard the retainer and replace with a new retainer.
3	High Frequency Antenna **Procedure** 1. Disconnect the electrical connectors. 2. Fully remove the old bolt and retainer prior to removing antenna through roof. 3. New antenna bolt and retainer will fit through roof opening prior to tightening the bolt and compressing the retainer.

USB Receptacle Replacement

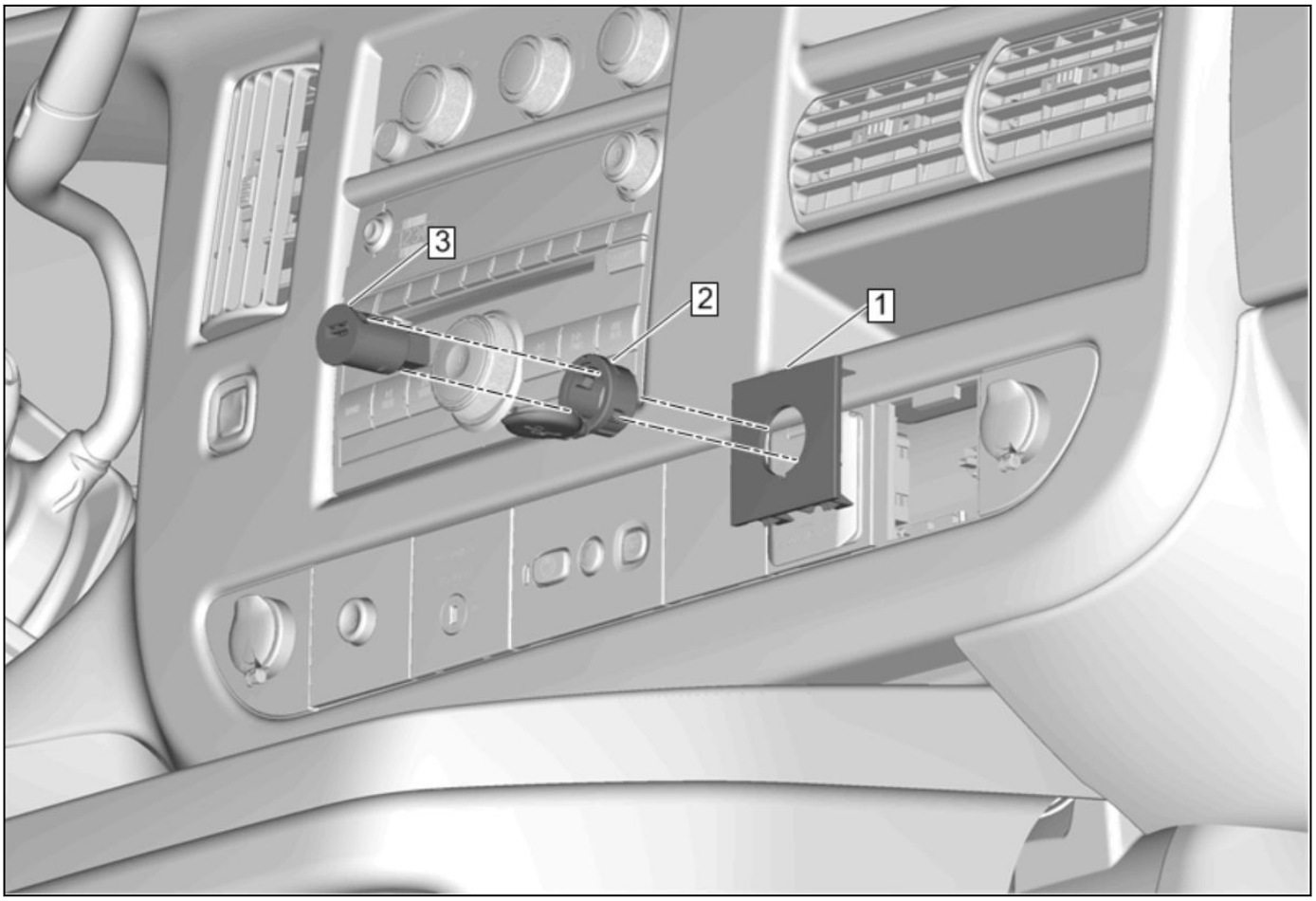

4843767

USB Receptacle Replacement

Callout	Component Name
1	Instrument Panel Outer Trim Cover
2	Audio Disc Player and USB Receptacle Cover
3	USB Receptacle **Procedure** Disconnect the electrical connector.

Radio Front Side Door Speaker Replacement

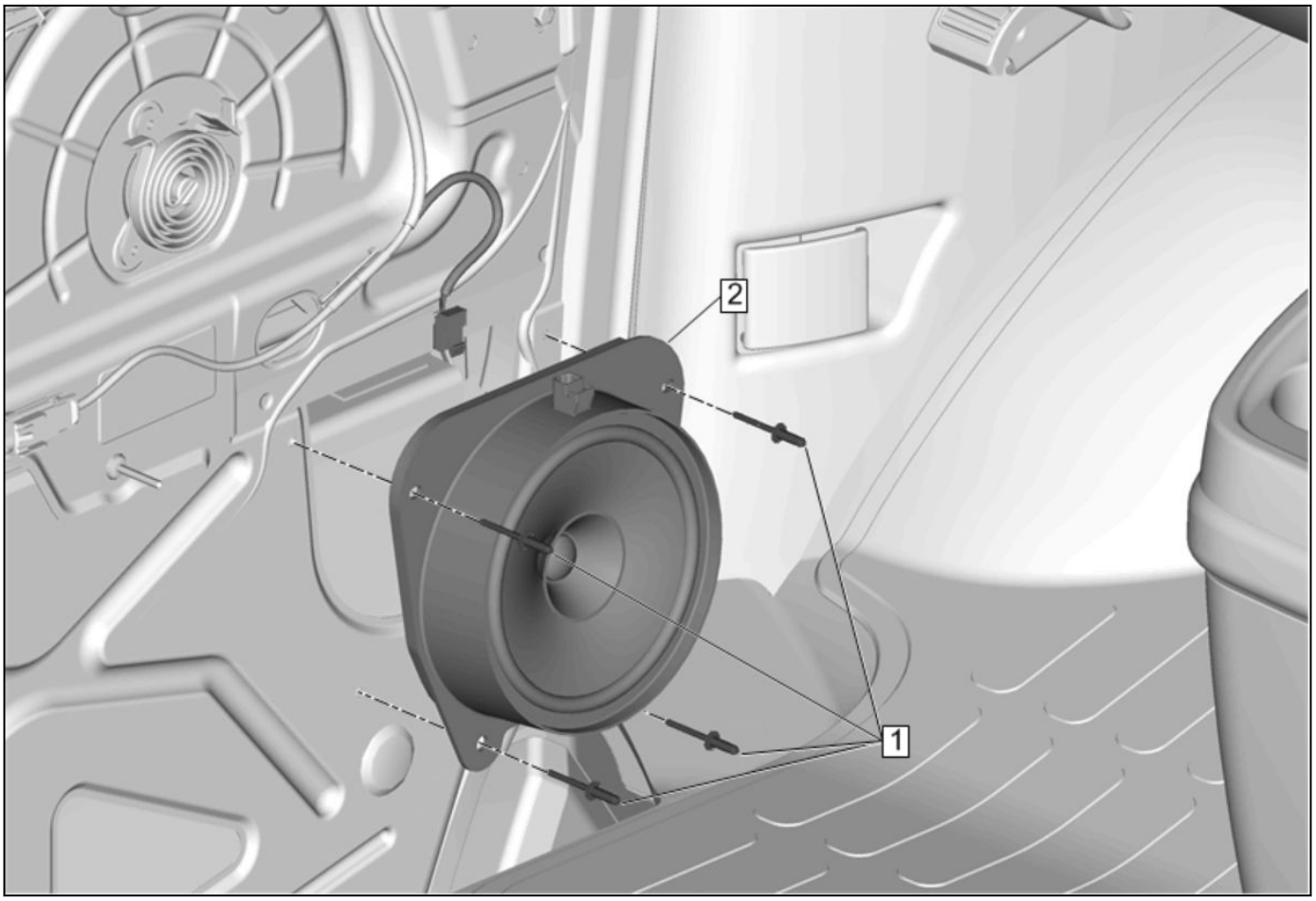

4848535

Radio Front Side Door Speaker Replacement

Callout	Component Name
Preliminary Procedure [Link target (target-id 149952-) not found]	
1	Radio Front Side Door Speaker Rivet [4x] ***Warning: [Link target (target-id 178036-) not found]*** **Procedure** Drill out the rivets.
2	Radio Front Side Door Speaker **Procedure** Disconnect the electrical connector.

Radio Rear Speaker Replacement - Lower

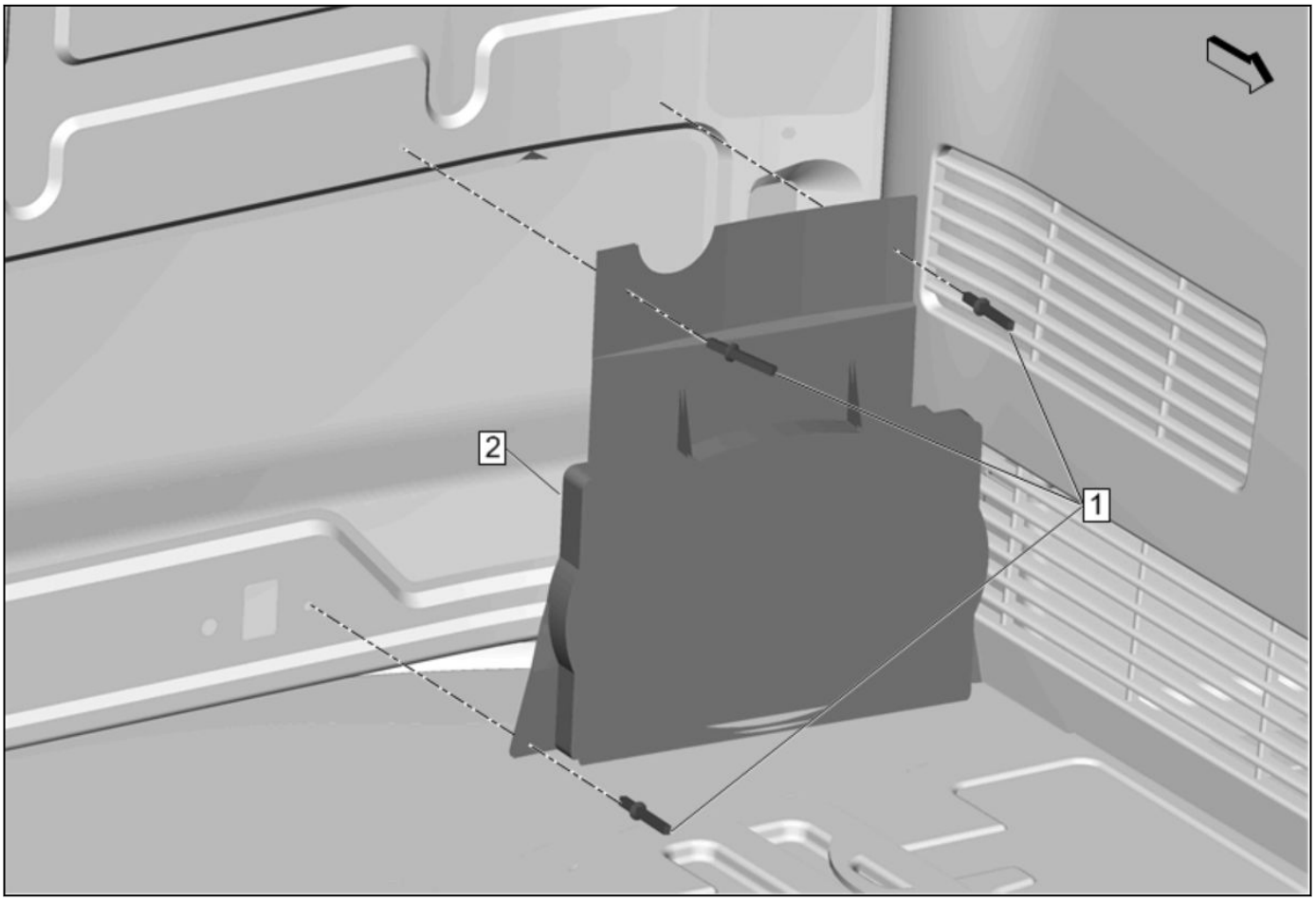

4848807

Radio Rear Speaker Replacement - Lower

Callout	Component Name
Preliminary Procedure [Link target (target-id 149949-) not found] or [Link target (target-id 149950-) not found]	
1	Rivet [3x] ***Warning: [Link target (target-id 178036-) not found]*** **Procedure** Drill out the rivets.
2	Radio Rear Speaker **Procedure** Disconnect the electrical connector.

Radio Rear Speaker Replacement - Upper

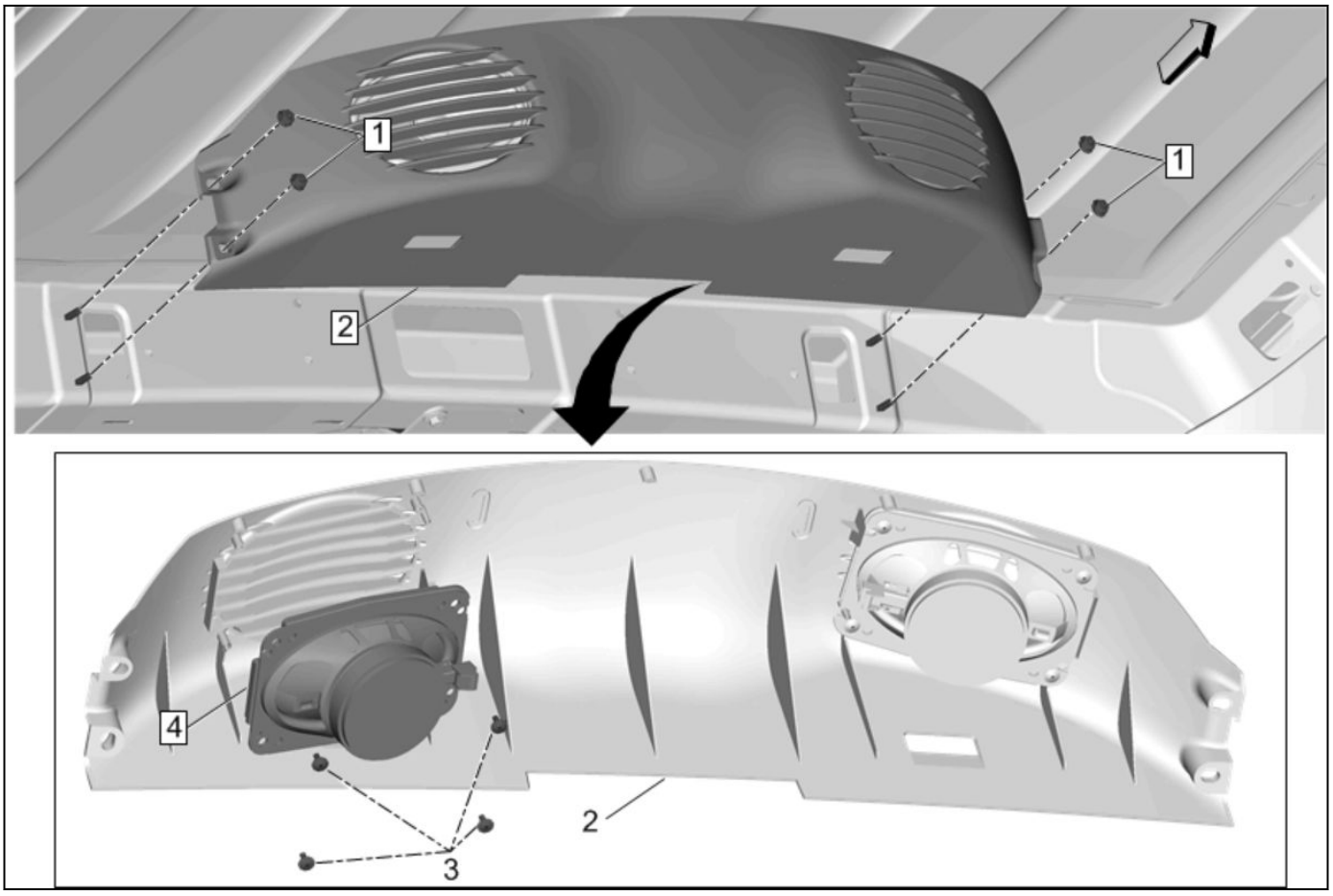

4848802

Radio Rear Speaker Replacement - Upper

Callout	Component Name
Preliminary Procedure [Link target (target-id 149915-) not found]	
1	Radio Rear Speaker Housing Nut [4x] **Caution:** [Link target (target-id 178169-) not found] **Tighten** 6 N•m (53 lb in)
2	Radio Rear Speaker Housing **Procedure** Disconnect the electrical connectors.
3	Radio Rear Speaker Bolt [4x] **Tighten** 2 N•m (18 lb in)
4	Radio Rear Speaker

Instrument Panel Center Accessory Function Switch Replacement

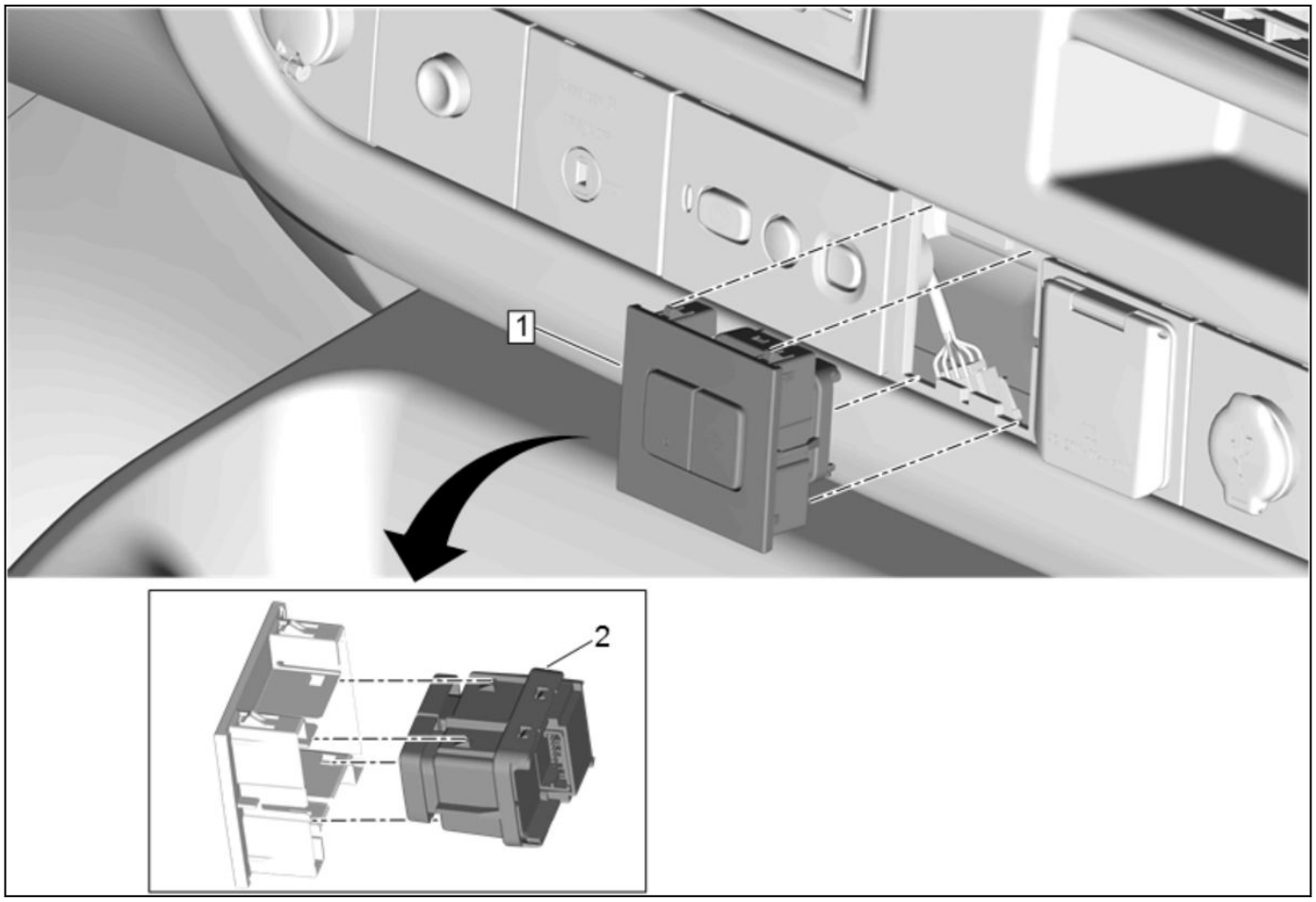

5064727

Instrument Panel Center Accessory Function Switch Replacement

Callout	Component Name
1	Instrument Panel Outer Trim Cover
2	Instrument Panel Center Accessory Function Switch **Procedure** 1. Disconnect the electrical connector. 2. Release the retaining tabs.

Displays and Gauges

Specifications

Fastener Specifications

Reusable Threaded Fastener Tightening Specifications

Note: All fasteners listed in this table can be reused after removal.	
Application	Specification
	Metric (English)
Instrument Cluster Bolt	2.5 N•m (22 lb in)

Schematic and Routing Diagrams

7085689

Instrument Cluster Schematics (Power, Ground and Driver Information Center Switch)

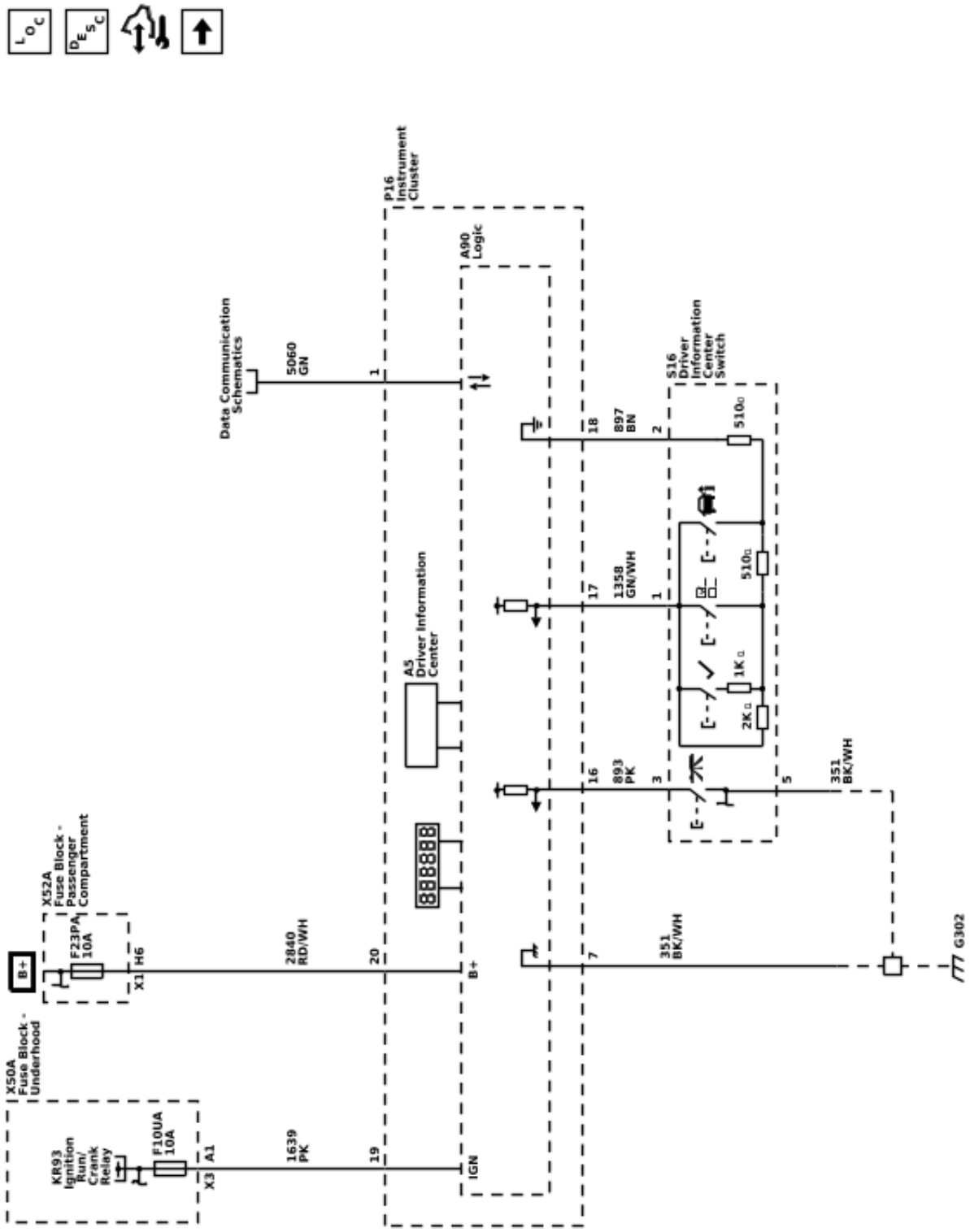

Instrument Cluster Schematics (Indicators)

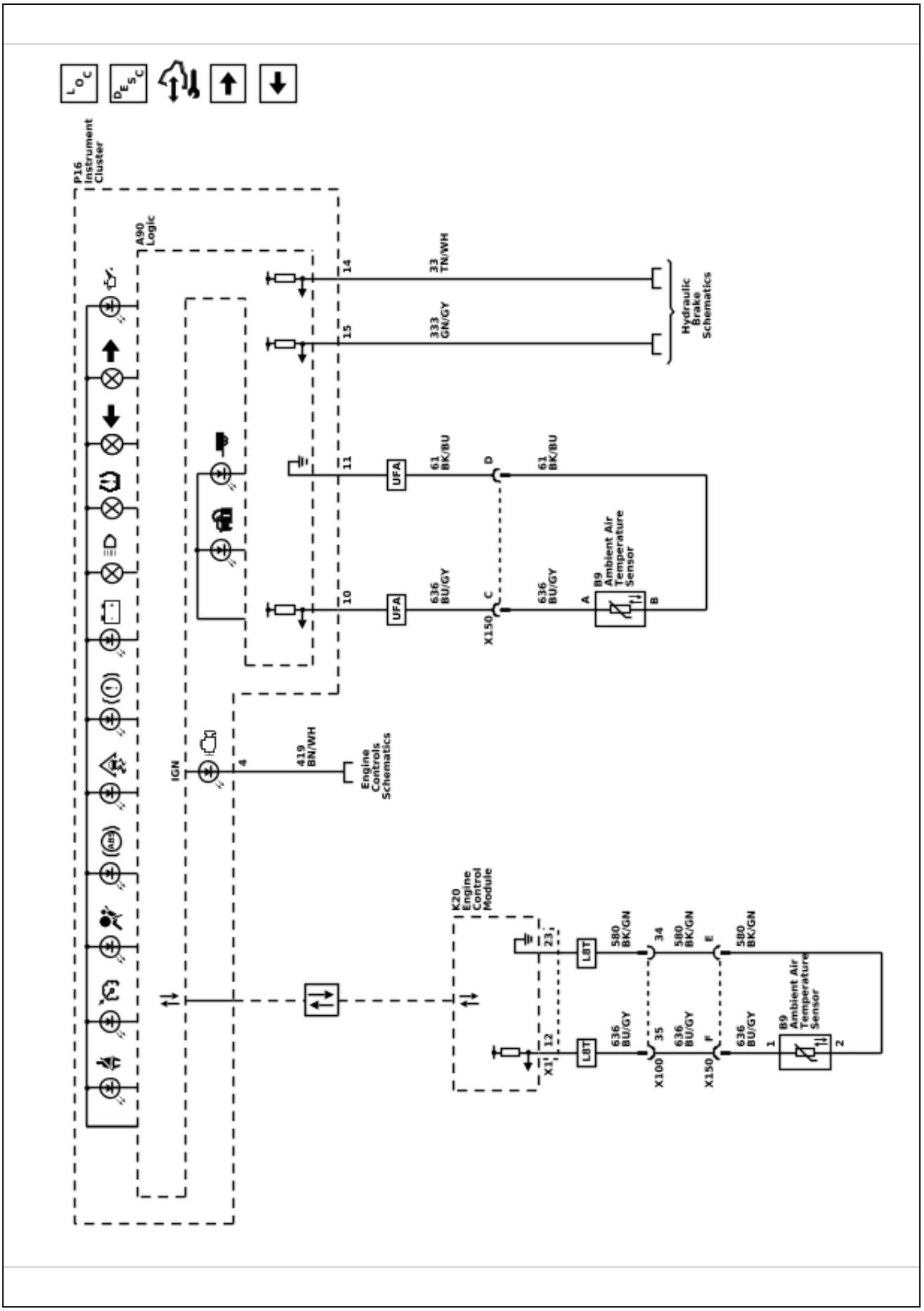

Instrument Cluster Schematics (Gauges)

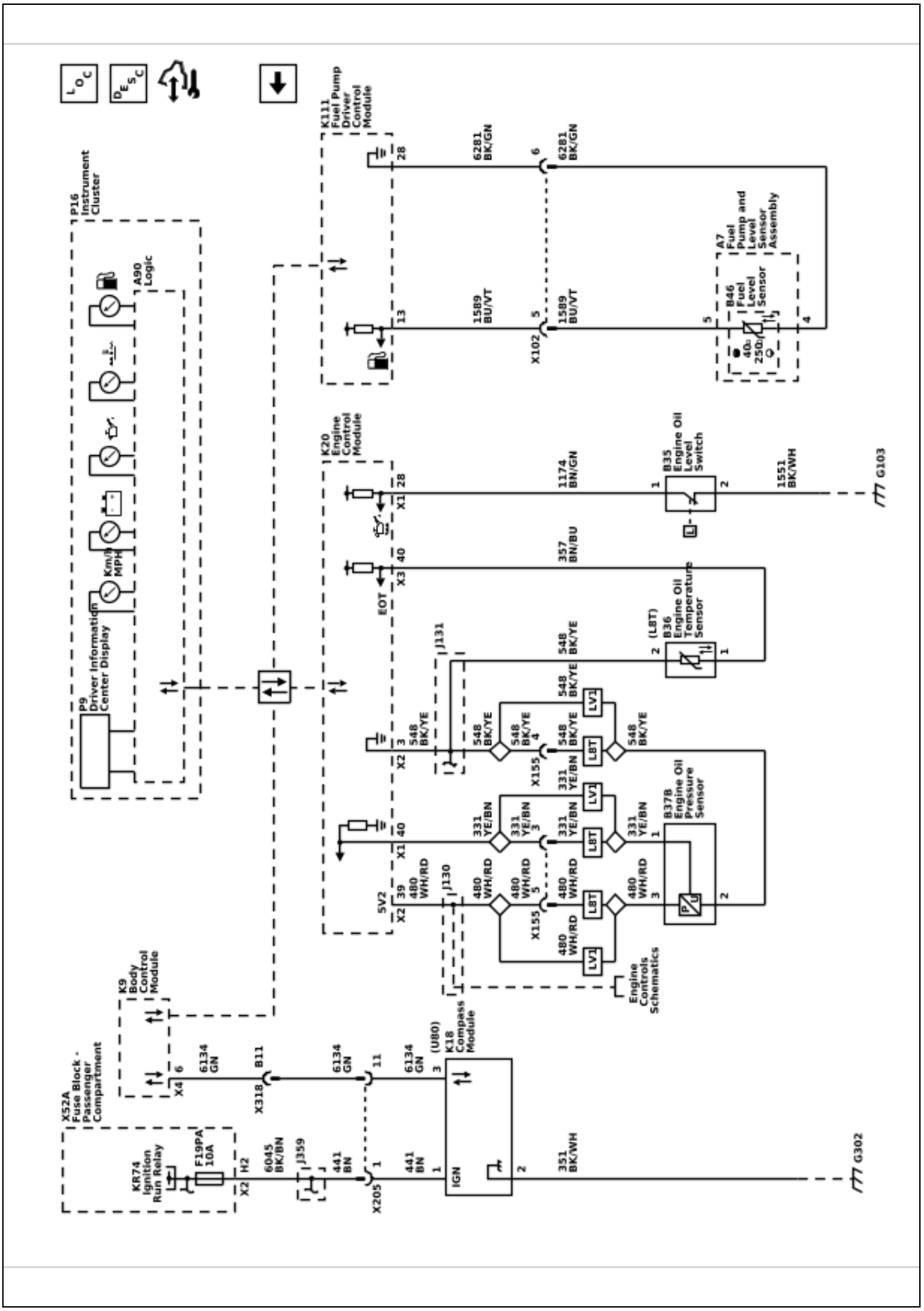

Audible Warnings Schematics (Audible Warnings)

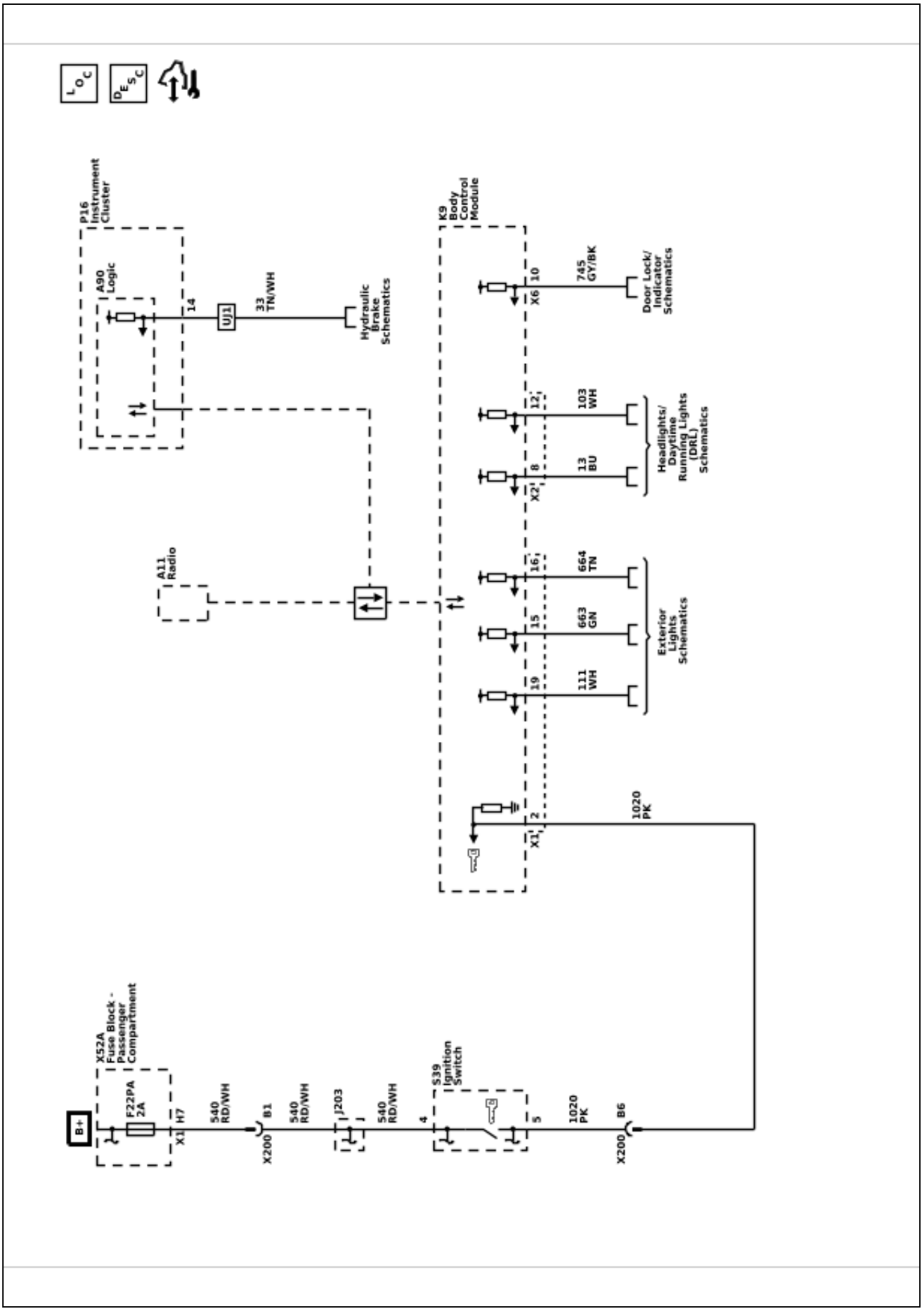

7085692

Repair Instructions

Ambient Air Temperature Gauge Sensor Replacement

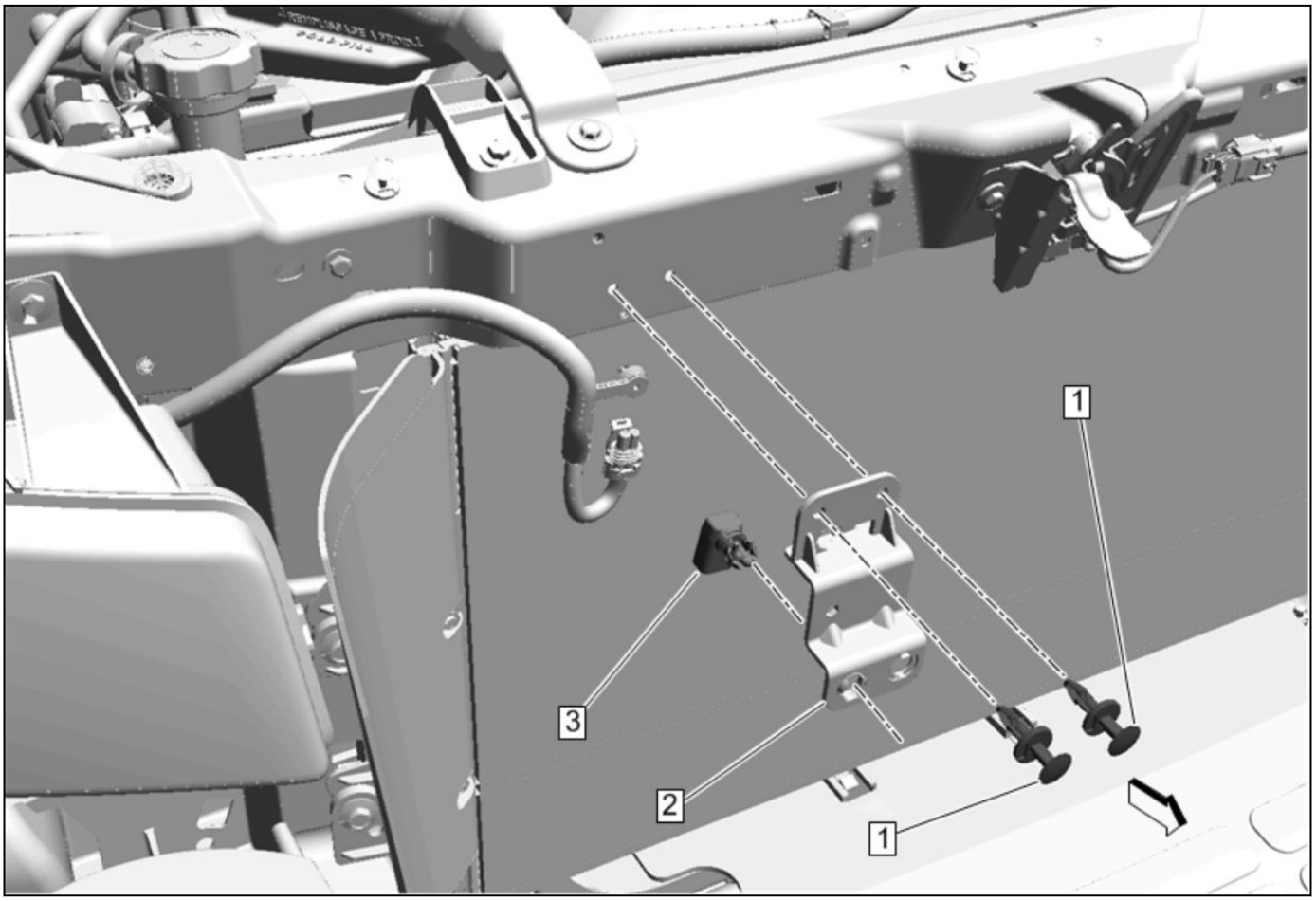

4845375

Ambient Air Temperature Gauge Sensor Replacement

Callout	Component Name
Preliminary Procedure [Link target (target-id 161787-) not found]	
1	Push Pin[2x]
2	Ambient Air Temperature Gauge Sensor Bracket **Procedure** 1. Disconnect the electrical connector. 2. Unclip the wiring harness from the ambient air temperature gauge sensor bracket.
3	Ambient Air Temperature Gauge Sensor

Compass Module Replacement

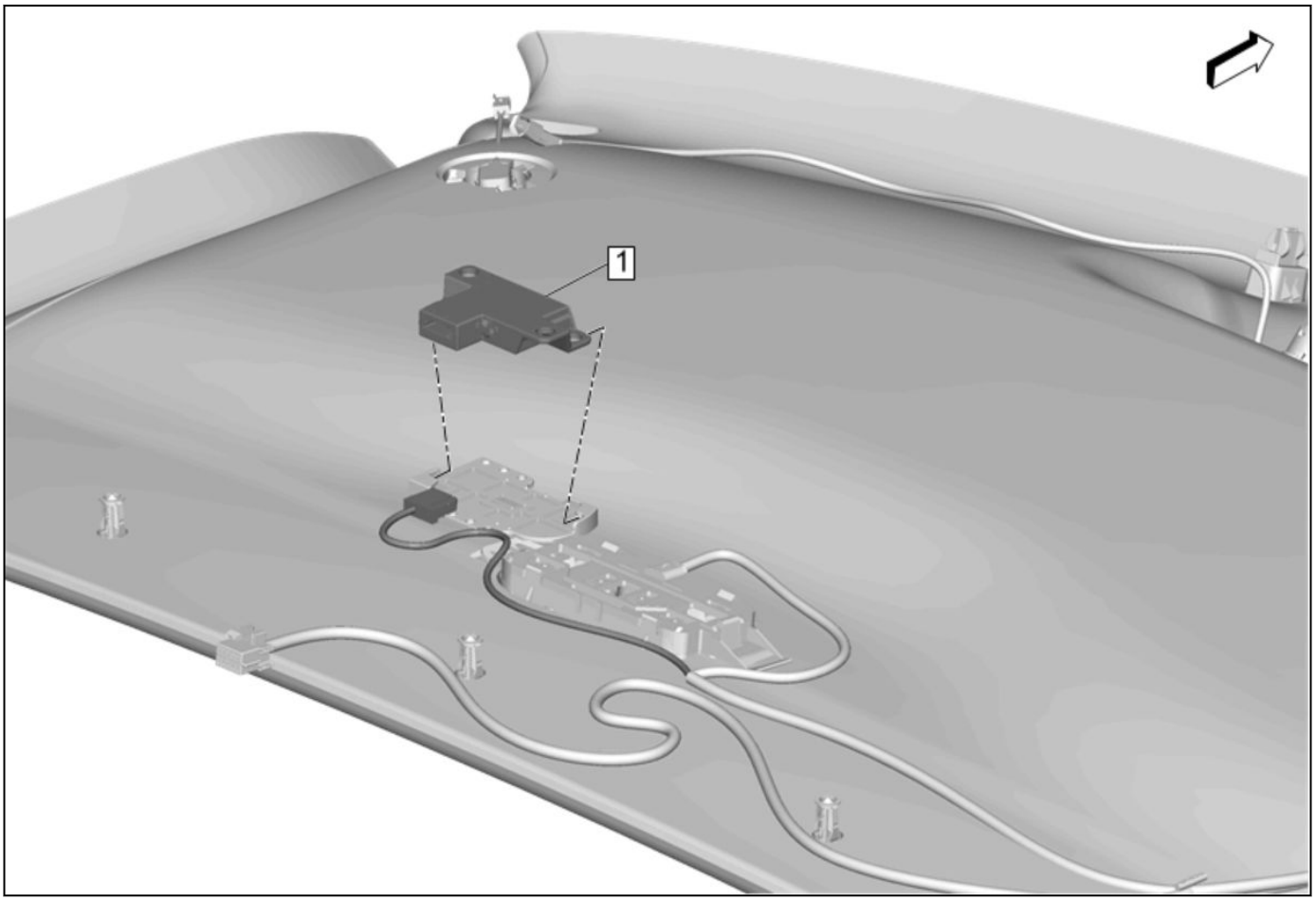

4850731

Compass Module Replacement

Callout	Component Name
Preliminary Procedure It is only necessary to lower the headlining. Only do those steps in the headlining procedure that will allow access to the component being removed. [Link target (target-id 148367-) not found]	
1	Electronic Compass Module **Procedure** Disconnect the electrical connector.

Driver Information Display Switch Replacement

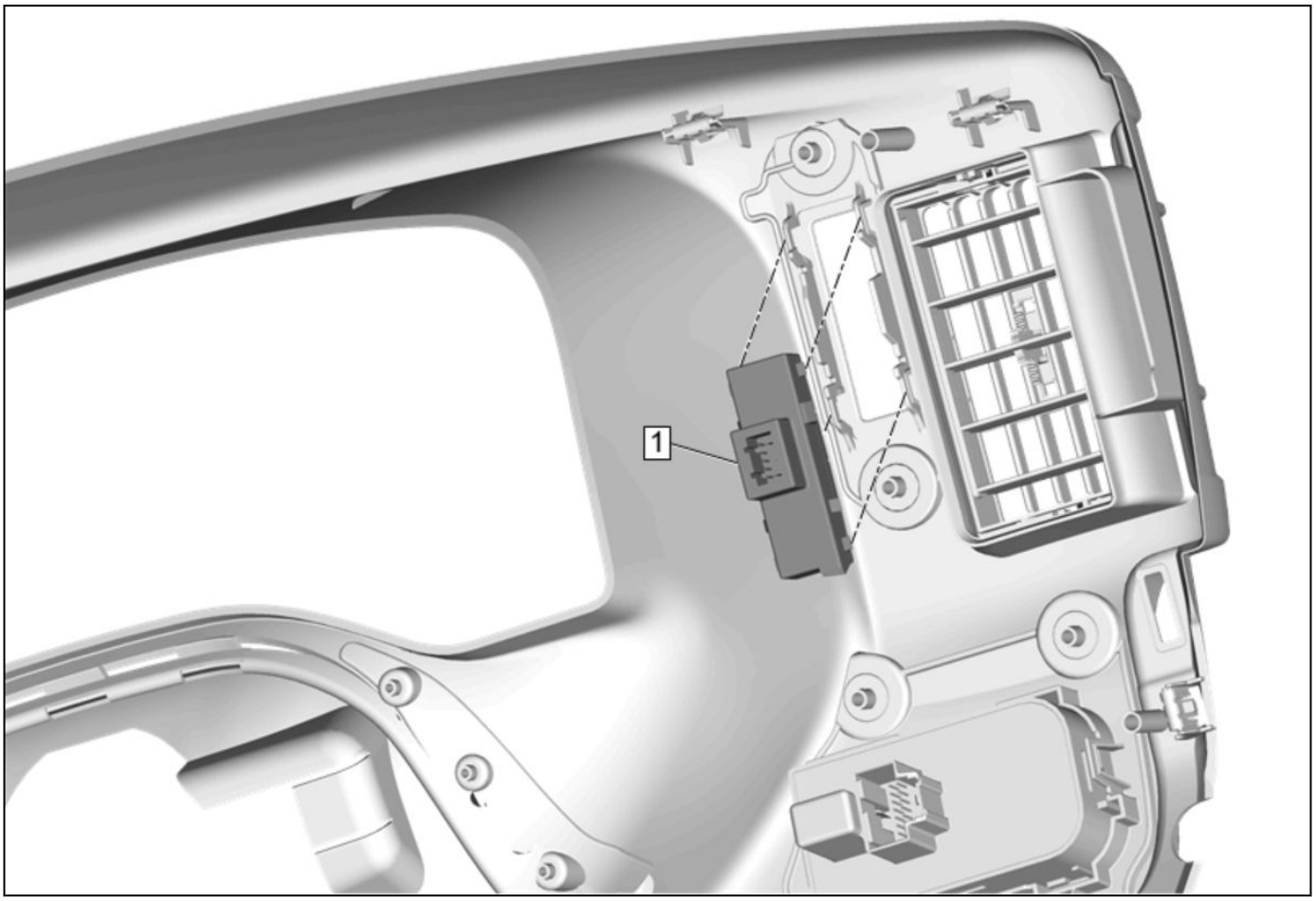

4850889

Driver Information Display Switch Replacement

Callout	Component Name
Preliminary Procedure [Link target (target-id 167815-) not found]	
1	Drivers Information Display Switch **Procedure** Release the retaining tabs.

Instrument Cluster Replacement

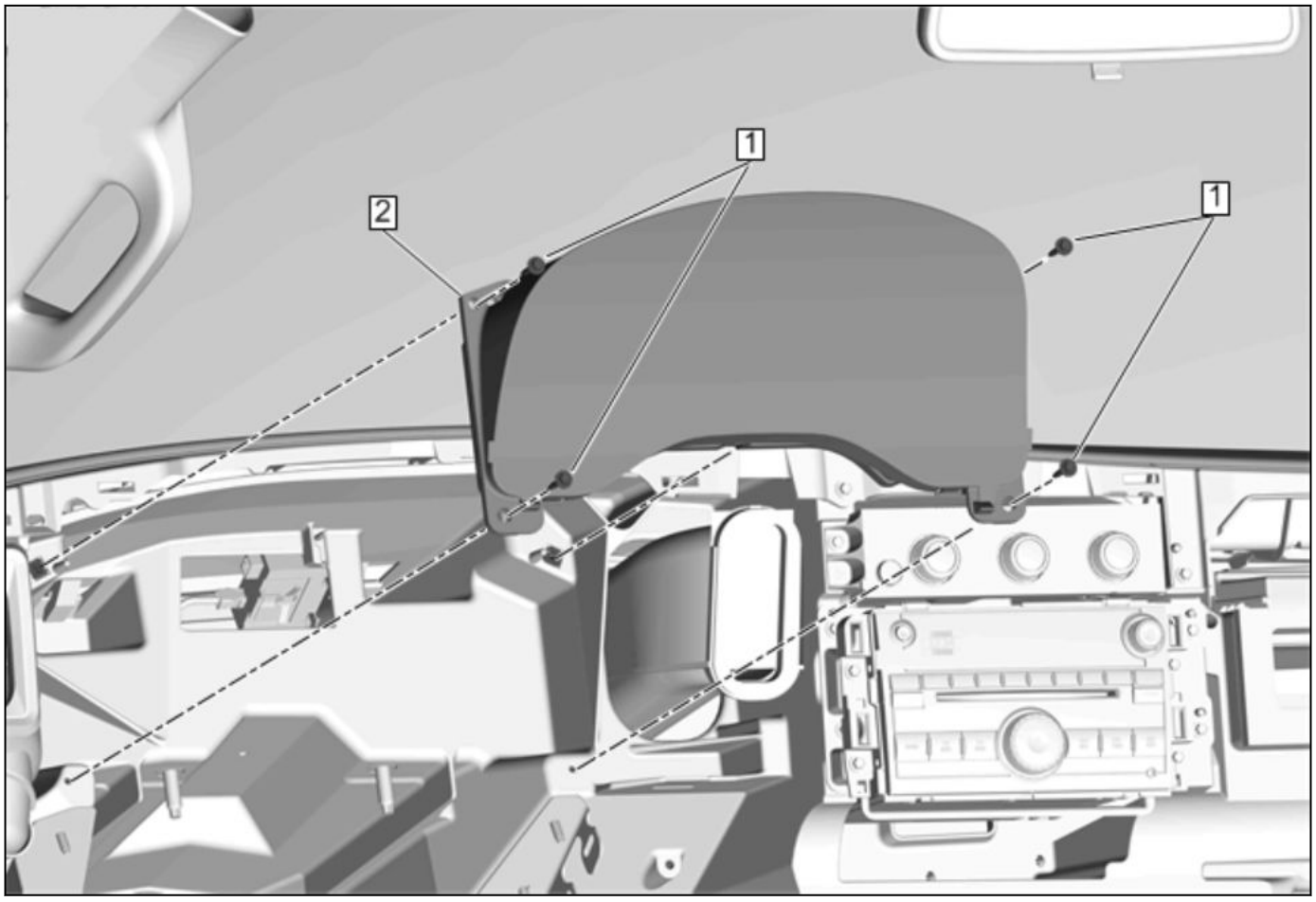

4834016

Instrument Cluster Replacement

Callout	Component Name
Preliminary Procedure [Link target (target-id 167815-) not found]	
1	Instrument Cluster Bolt [4x] **Caution:** Refer to [Link target (target-id 178169-) not found] . **Tighten** 2.5 N•m (22 lb in)
2	Instrument Cluster **Procedure** 1. Disconnect the electrical connector. 2. Perform the necessary programming and setup procedures: [Link target (target-id 72864-) not found]

Image Display Cameras

Specifications

Fastener Specifications

Reusable Threaded Fastener Tightening Specifications

Note: All fasteners listed in this table can be reused after removal.	
Application	**Specification**
	Metric (English)
Rearview Camera Bracket Bolt	9 N•m (80 lb in)

Schematic and Routing Diagrams

Image Display Camera Schematics (Rear Vision Camera - Cutaway (UVC))

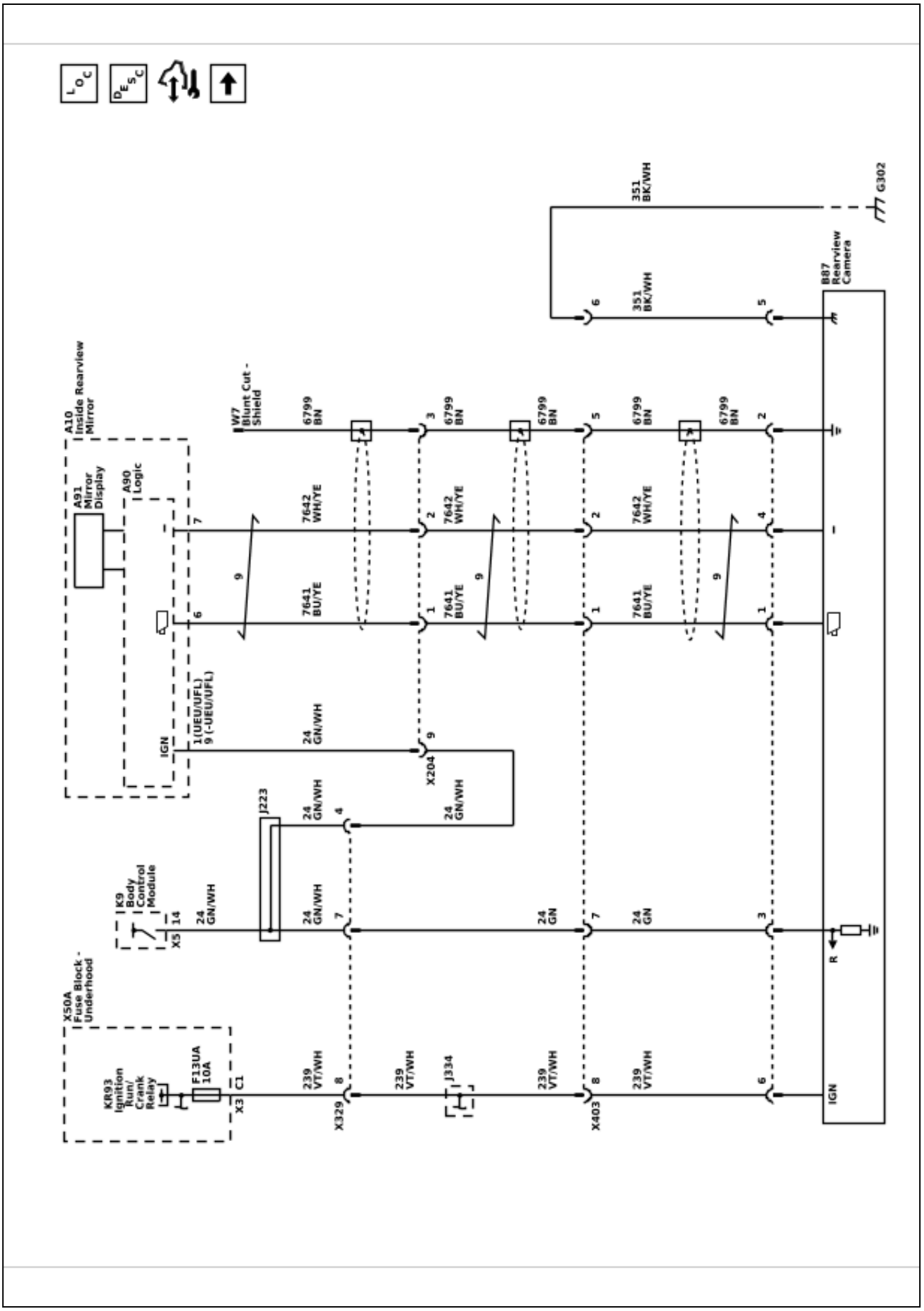

Image Display Camera Schematics (Rear Vision Camera - Cargo/Passenger (UVC))

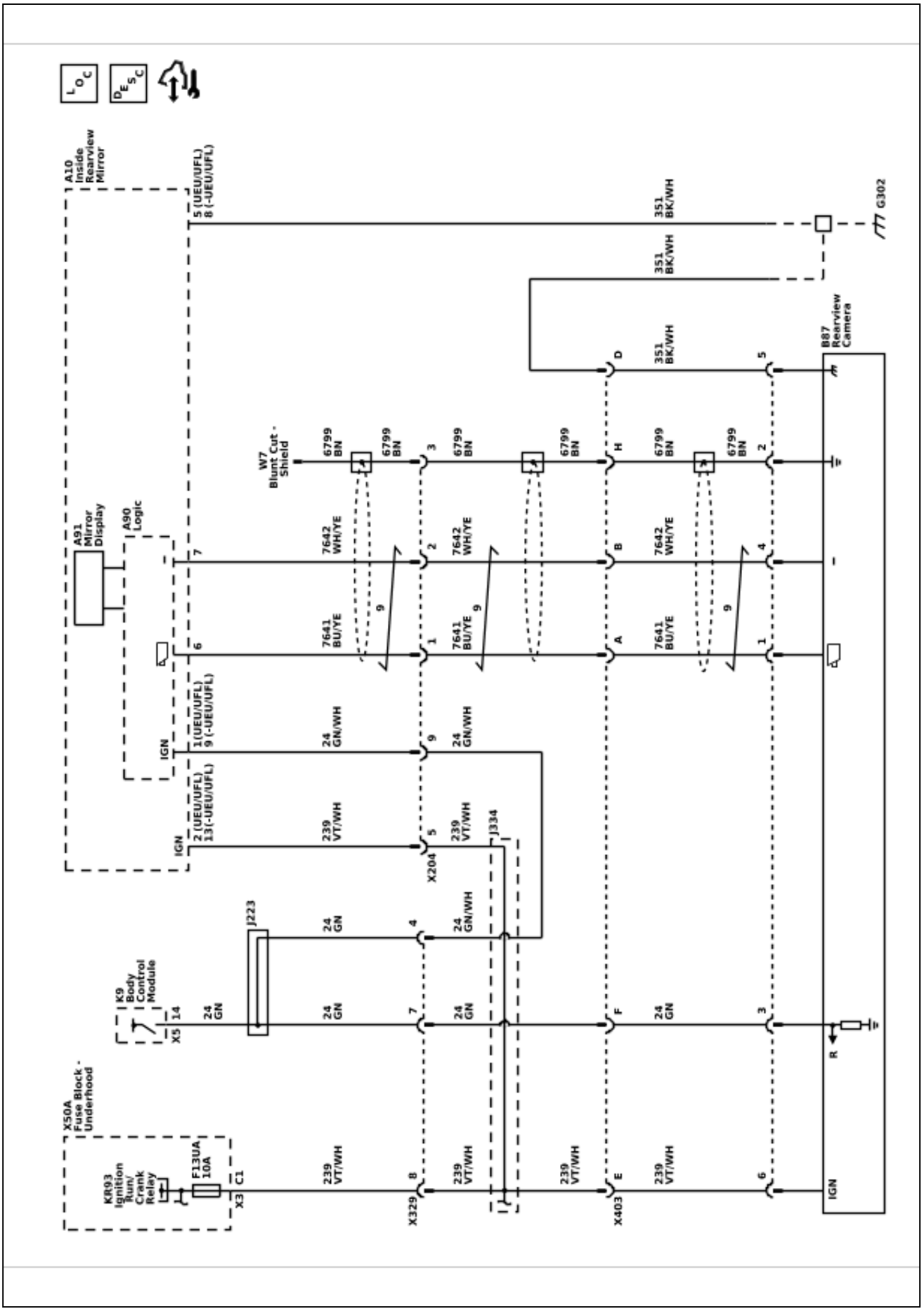

7085694

Repair Instructions

Rearview Camera Image Display Module Replacement

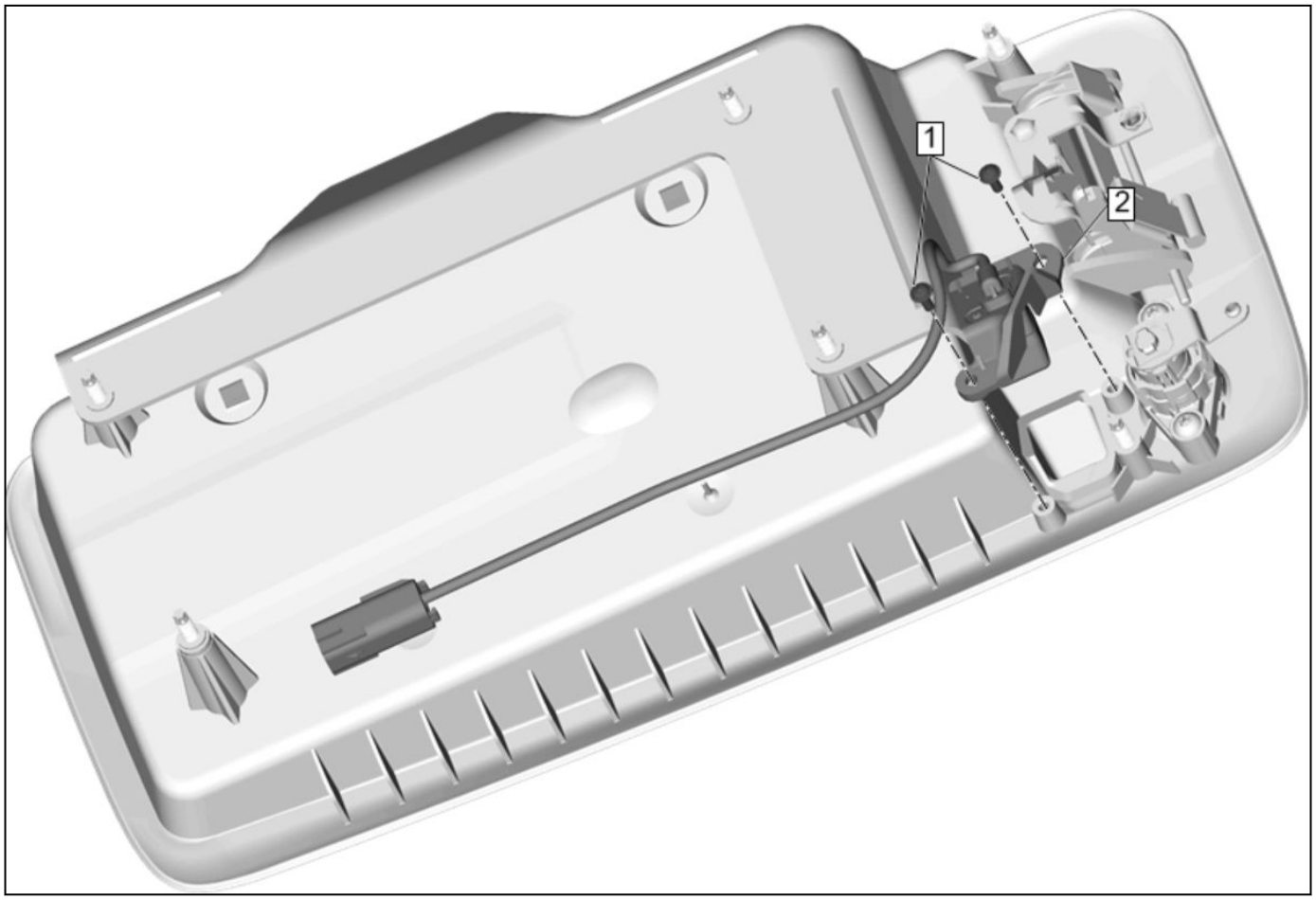

4851550

Rearview Camera Image Display Module Replacement

Callout	Component Name
Preliminary Procedure [Link target (target-id 298839-) not found]	
1	Rearview Camera Bracket Bolt [2x] **Caution:** [Link target (target-id 178169-) not found] **Tighten** 9 N•m (80 lb in)
2	Rearview Camera Image Display Module

Section 3

Engine/Propulsion

Starting, Charging, and Low Voltage Energy Storage **3-2**
Specifications **3-2**
Fastener Specifications 3-2
Schematic and Routing Diagrams **3-2**
Starting and Charging Schematics 3-3
Diagnostic Information and Procedures **3-8**
Starter Noise Diagnosis 3-8
Repair Instructions **3-8**
Battery Negative Cable Disconnection and Connection 3-8
Battery Negative Cable Disconnection and Connection 3-9
Battery Current Sensor Replacement 3-10
Battery Negative Cable Replacement 3-16
Battery Negative Cable Replacement 3-21
Auxiliary Battery Negative Cable Replacement 3-29
Battery Positive Cable Replacement 3-30
Battery Positive Cable Replacement 3-53
Battery Positive Cable Replacement 3-71
Battery Positive Cable Replacement 3-76
Auxiliary Battery Positive Cable Replacement (Long Wheelbase) 3-81
Auxiliary Battery Positive Cable Replacement (Short Wheelbase) 3-83
Battery Replacement 3-85
Battery Tray Replacement 3-88
Auxiliary Battery and Tray Replacement 3-88
Starter Replacement 3-90
Starter Replacement 3-92
Starter Shield Replacement 3-100
Starter Heat Shield Replacement 3-101
Generator Replacement 3-104
Generator Replacement 3-109

Engine/Propulsion

Starting, Charging, and Low Voltage Energy Storage

Specifications

Fastener Specifications

Reusable Threaded Fastener Tightening Specifications

Note: All fasteners listed in this table can be reused after removal.	
Application	**Specification**
	Metric (English)
Auxiliary Battery Hold Down Bolt	25 N•m (18 lb ft)
Auxiliary Battery Negative Cable @ Auxiliary Battery Fastener	14 N•m (124 lb in)
Auxiliary Battery Negative Cable @ Relay Fastener	7.5 N•m (66 lb in)
Auxiliary Battery Negative Ground Cable @ Frame Bolt (K4B)	17 N•m (13 lb ft)
Auxiliary Battery Positive Cable @ Auxiliary Battery Fastener	14 N•m (124 lb in)
Auxiliary Battery Tray Mounting Bolt	25 N•m (18 lb ft)
Auxiliary Positive Battery Cable @ Junction Block Nut	10 N•m (89 lb in)
Battery Negative Cable @ Battery Fastener	13 N•m (115 lb in)
Battery Negative Cable @ Engine Block Bolt (L8T)	40 N•m (30 lb ft)
Battery Negative Cable Ground @ Inner Fender Bolt (L8T)	22 N•m (16 lb ft)
Battery Positive Cable @ Battery	13 N•m (115 lb in)
Battery Positive Cable @ Battery Distribution Engine Compartment Fuse Block Nut	10 N•m (89 lb in)
Battery Positive Cable @ Generator Nut	15 N•m (11 lb ft)
Battery Positive Cable @ Junction Block Nut	10 N•m (89 lb in)
Battery Positive Cable @ Relay Nut	7.5 N•m (66 lb in)
Battery Positive Cable @ Starter Solenoid Nut (L8T, LV1)	14 N•m (124 lb in)
Battery Positive Cable Retainer Bolt (LV1)	10 N•m (89 lb in)
Battery Tray Mounting Bolt	9 N•m (80 lb in)
Engine Oil Fill Tube Bracket Bolt	25 N•m (18 lb ft)
Engine Wiring Harness Bracket Bolt	10 N•m (89 lb in)
Flywheel Inspection Cover Bolt	9 N•m (80 lb in)
Front End Sheet Metal Diagonal Brace Bolt	22 N•m (16 lb ft)
Fuel Pump Fuel Feed Pipe Bracket Bolt	22 N•m (16 lb ft)
Generator Bolt	58 N•m (43 lb ft)
Heater and Air Conditioning Control Vacuum Tank Bolt	3.3 N•m (29 lb in)
Right Transmission Cover Bolt	12 N•m (106 lb in)
Starter Bolt (L8T, LV1)	50 N•m (37 lb ft)
Starter Heat Shield Fastener (Engine Block - LV1)	22 N•m (16 lb ft)
Starter Heat Shield Fastener (Starter - LV1)	9 N•m (80 lb in)

Schematic and Routing Diagrams

Starting and Charging Schematics (Starting System - One Battery)

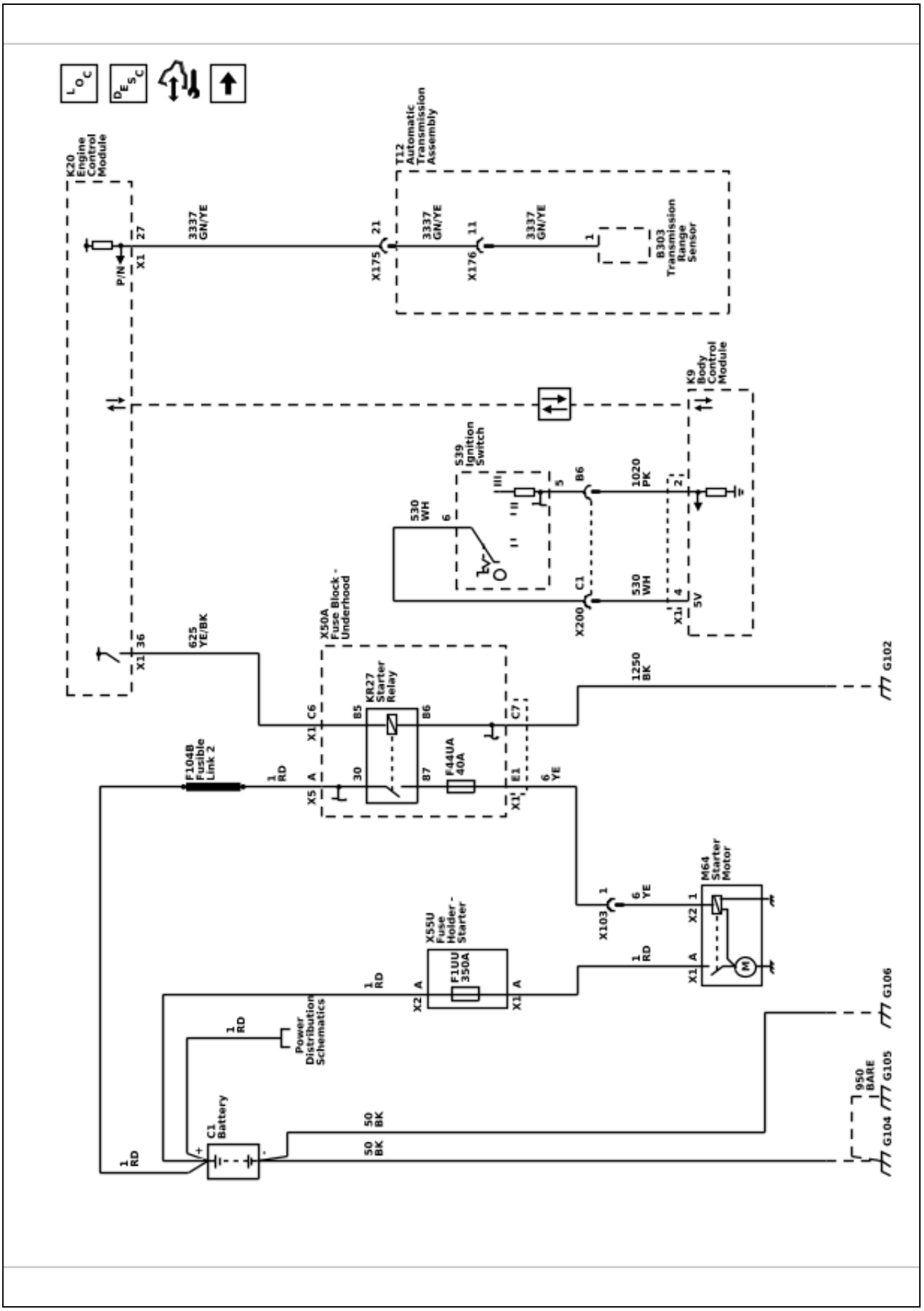

Starting and Charging Schematics (Charging System - One Battery)

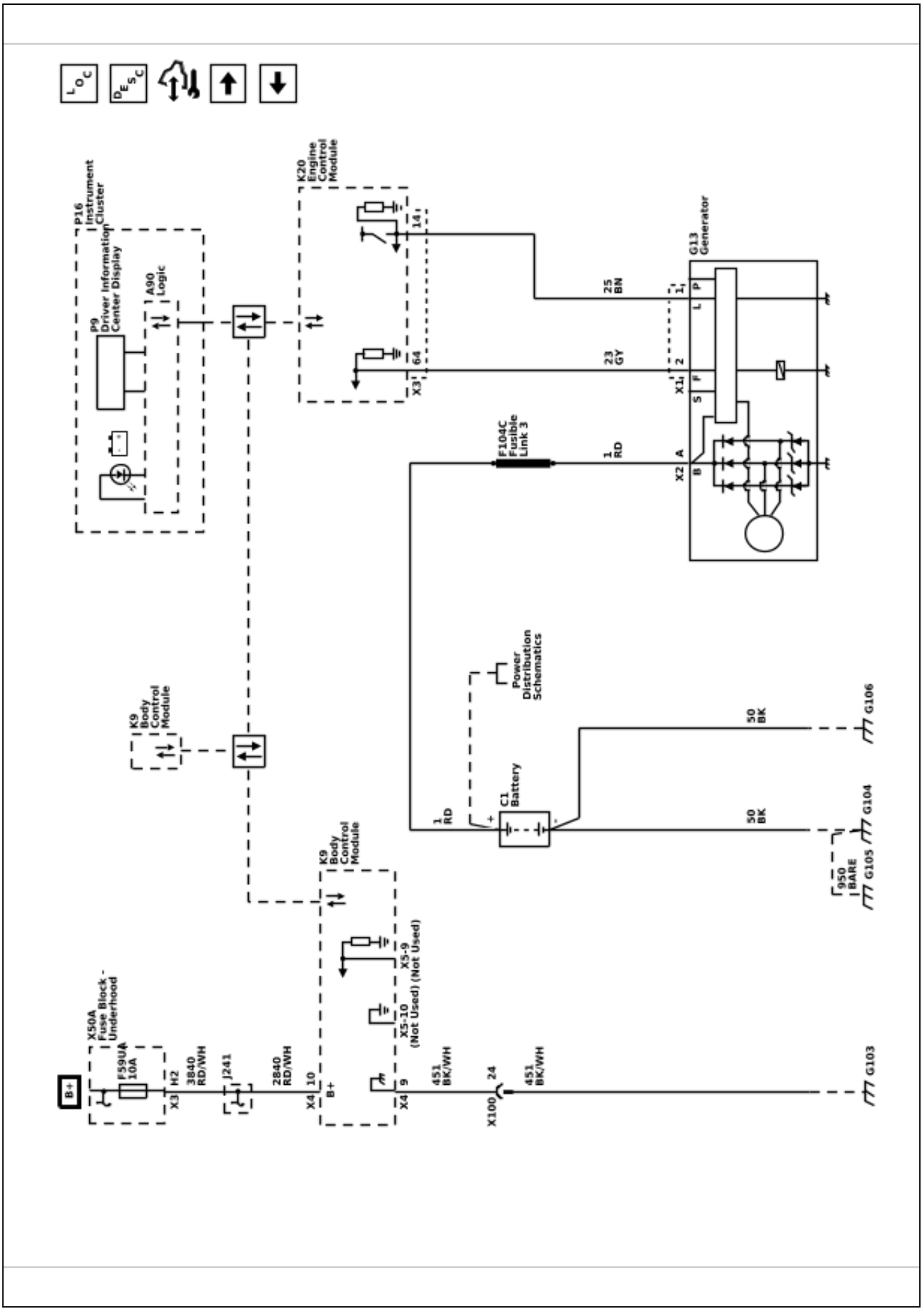

Starting and Charging Schematics (Starting System - Two Batteries)

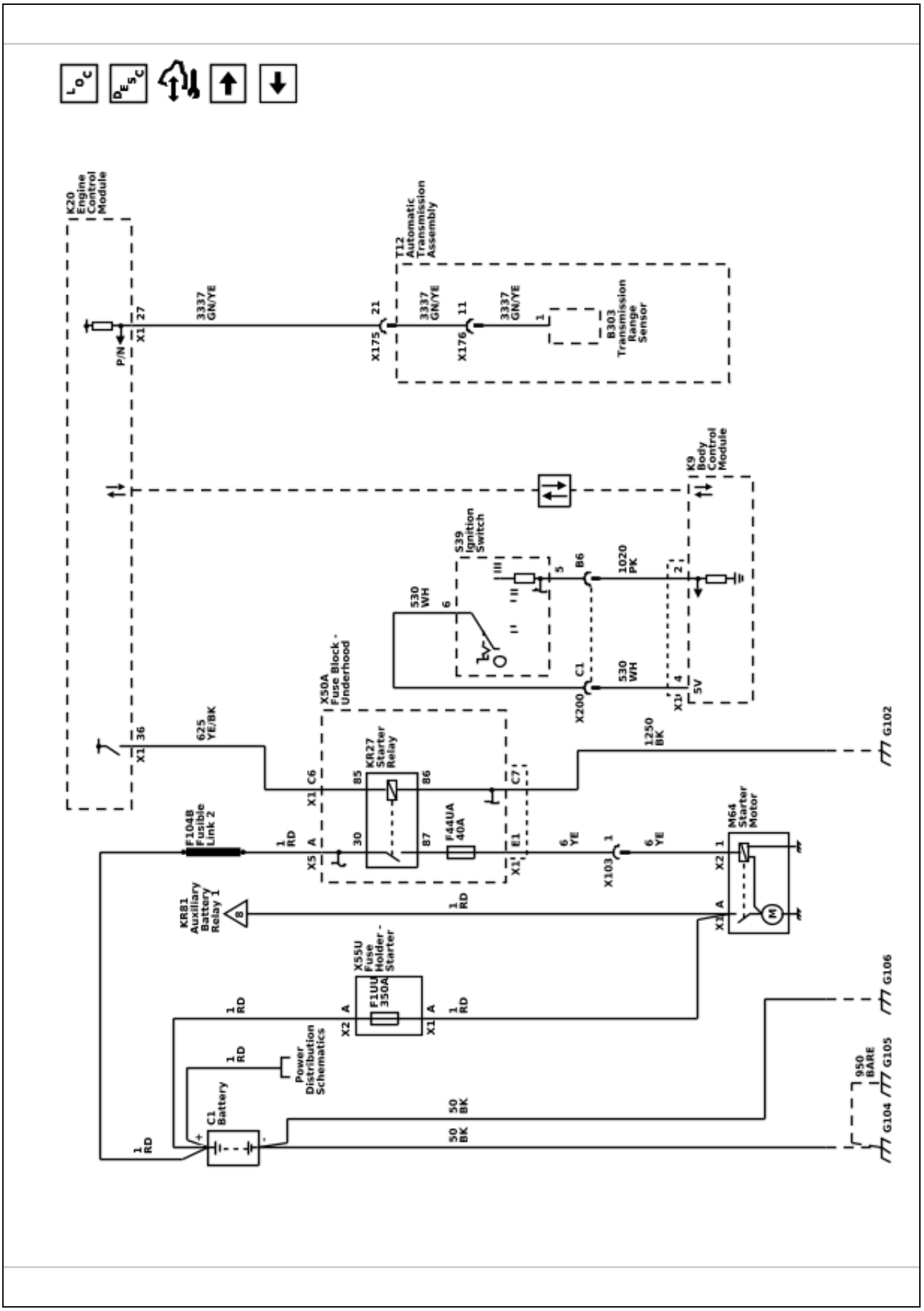

Starting and Charging Schematics (Charging System - Two Batteries)

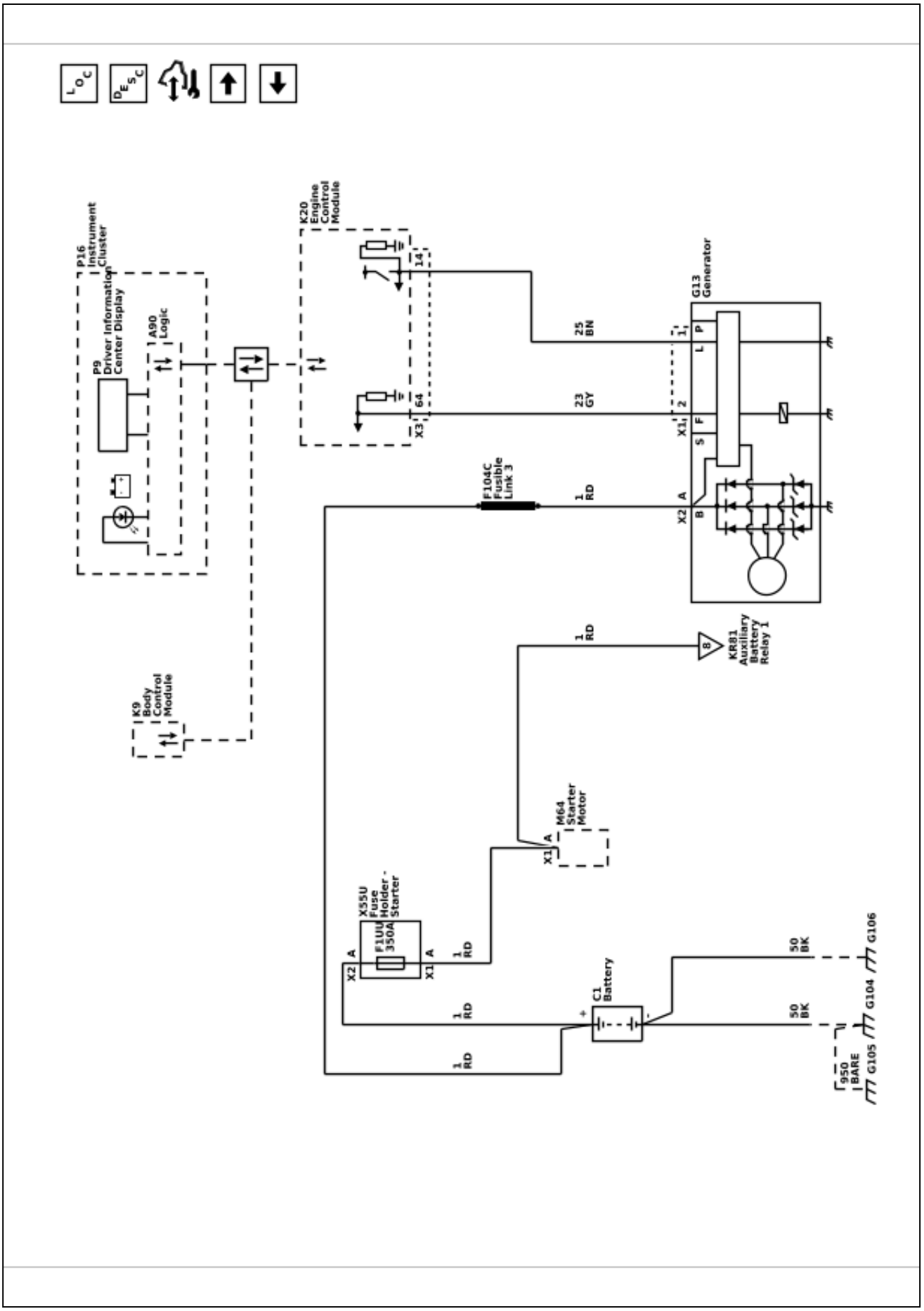

7085700

Starting and Charging Schematics (Auxiliary Battery Relay and Auxiliary Battery - Two Batteries)

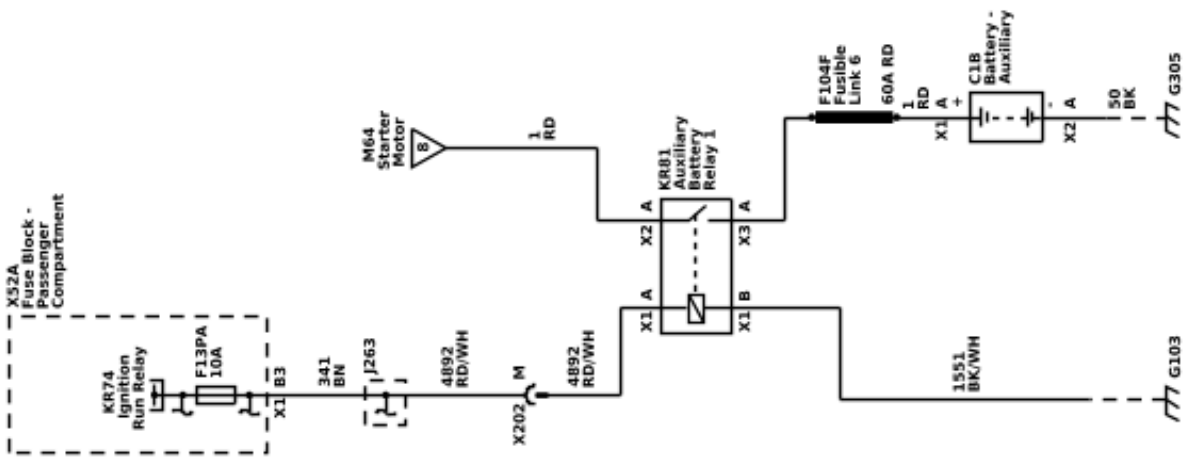

Diagnostic Information and Procedures

Starter Noise Diagnosis

Diagnostic Instructions

- Perform the [Link target (target-id 72794-) not found] prior to using this diagnostic procedure.
- Review [Link target (target-id 161235-) not found] for an overview of the diagnostic approach.
- [Link target (target-id 161236-) not found] provides an overview of each diagnostic category.

Circuit/System Description

The starter motors are non-repairable. They have pole pieces that are arranged around the armature. Both solenoid windings are energized. The pull-in winding circuit is completed to the ground through the starter motor. The windings work together magnetically to pull and hold in the plunger. The plunger moves the shift lever. This action causes the starter drive assembly to rotate on the armature shaft spline as it engages with the flywheel ring gear on the engine. Moving at the same time, the plunger also closes the solenoid switch contacts in the starter solenoid. Full battery voltage is applied directly to the starter motor and it cranks the engine.

Reference Information

Description and Operation
[Link target (target-id 37814-) not found]

Circuit/System Verification

Start the engine. Listen to the starter noise, while the engine is cranking. Compare the concern to a similar vehicle.

Circuit/System Testing

1. Remove the flywheel inspection cover.
2. Inspect the flywheel for the following:
   - Loose flywheel bolts
   - Chipped gear teeth
   - Missing gear teeth
   - Bent flywheel
   - Debris in the bell housing

   ⇒ If not within specifications, remove the debris, tighten the flywheel bolts, or repair or replace the flywheel.
3. If all inspections were within specification, replace the starter motor.

Repair Instructions

Perform the [Link target (target-id 143214-) not found] after completing the diagnostic procedure.

- Replace the starter, refer to the affected component's procedure for service.
- Replace the engine flywheel, refer to the affected component's procedure for service.

Repair Instructions

Battery Negative Cable Disconnection and Connection

Removal Procedure

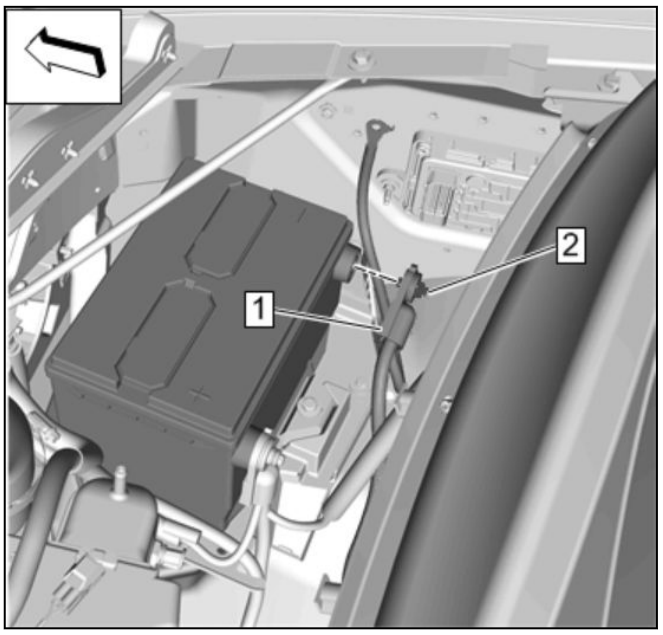

4590700

Warning: Unless directed otherwise, the ignition must be OFF with the key removed, and all electrical loads must be OFF before servicing any electrical component. Disconnect the negative battery cable to prevent an electrical spark should a tool or equipment come in contact with an exposed electrical terminal. Failure to follow these precautions may result in personal injury and/or damage to the vehicle or its components.For Vehicles equipped with OnStar® (UE1) with Back Up Battery:The Back Up Battery is a redundant power supply to allow limited OnStar® functionality in the event of a main vehicle battery power disruption to the VCIM (OnStar®module). Do not disconnect the main vehicle battery or remove the OnStar® fuse with the ignition key in any position other than OFF. Retained accessory power should be allowed to time out or be disabled (simply opening the driver door should disable retained accessory power) before disconnecting power. Disconnecting power to the OnStar® module in any

way while the ignition is On or with retained accessory power activated may cause activation of the OnStar® Back-Up Battery system and will discharge and permanently damage the back-up battery. Once the Back-Up Battery is activated it will stay on until it has completely discharged. The back-up battery is not rechargeable and once activated the back-up battery must be replaced.

1. Battery Negative Cable Fastener (2) » Loosen
2. Battery Negative Cable (1) » Reposition away

Installation Procedure

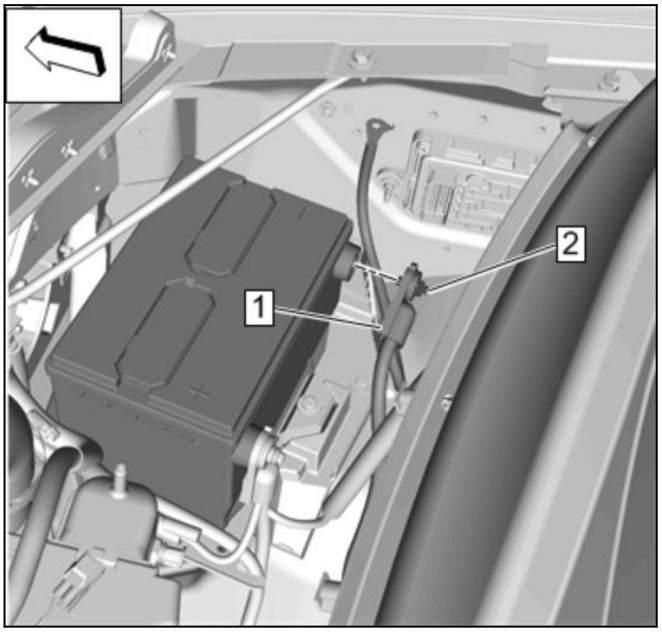

4590700

Note: Clean any existing corrosion from the battery terminal bolt flange and the battery cable end.

1. Battery Negative Cable (1) » Install

Caution: Refer to [Link target (target-id 178169-) not found] .

2. Battery Negative Cable Fastener (2) » Tighten**13** N•m **(115 lb in)**

Battery Negative Cable Disconnection and Connection

Removal Procedure

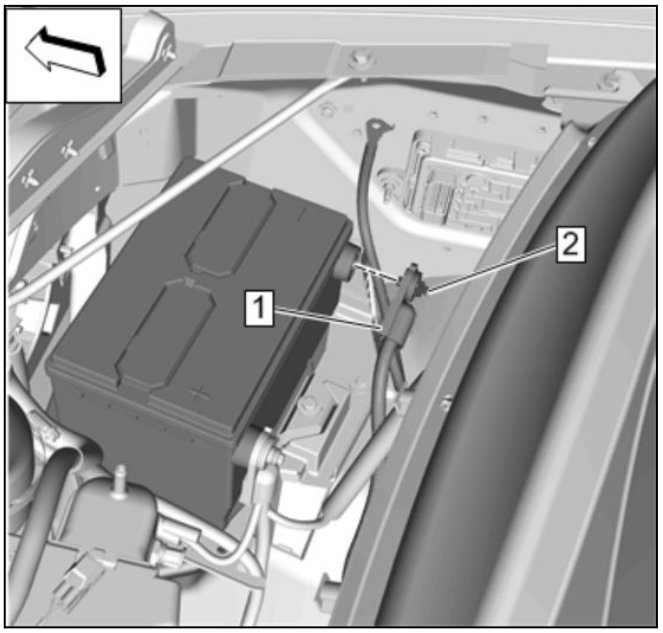

4590700

Warning: Unless directed otherwise, the ignition must be OFF with the key removed, and all electrical loads must be OFF before servicing any electrical component. Disconnect the negative battery cable to prevent an electrical spark should a tool or equipment come in contact with an exposed electrical terminal. Failure to follow these precautions may result in personal injury and/or damage to the vehicle or its components.For Vehicles equipped with OnStar® (UE1) with Back Up Battery:The Back Up Battery is a redundant power supply to allow limited OnStar® functionality in the event of a main vehicle battery power disruption to the VCIM (OnStar®module). Do not disconnect the main vehicle battery or remove the OnStar® fuse with the ignition key in any position other than OFF. Retained accessory power should be allowed to time out or be disabled (simply opening the driver door should disable retained accessory power) before disconnecting power. Disconnecting power to the OnStar® module in any way while the ignition is On or with retained accessory power activated may cause activation of the OnStar® Back-Up Battery system and will discharge and permanently damage the back-up battery. Once the Back-Up Battery is activated it will stay on until it has completely discharged. The back-up battery is not rechargeable and once activated the back-up battery must be replaced.

1. Battery Negative Cable Fastener (2) » Loosen
2. Battery Negative Cable (1) » Reposition away

3. Raise and support the vehicle. [Link target (target-id 47852-) not found]

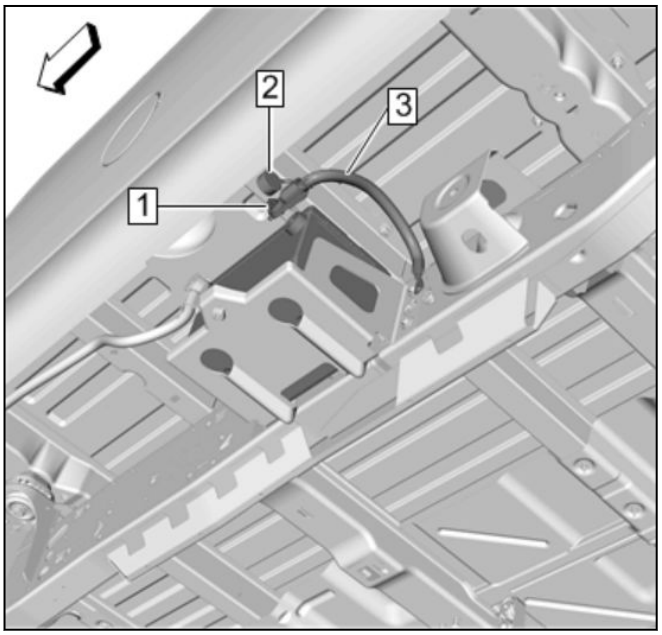

4590701

4. Protective Cap (2) » Reposition away
5. Auxiliary Battery Negative Cable Fastener (1) » Loosen
6. Auxiliary Battery Negative Cable (3) » Reposition away

Installation Procedure

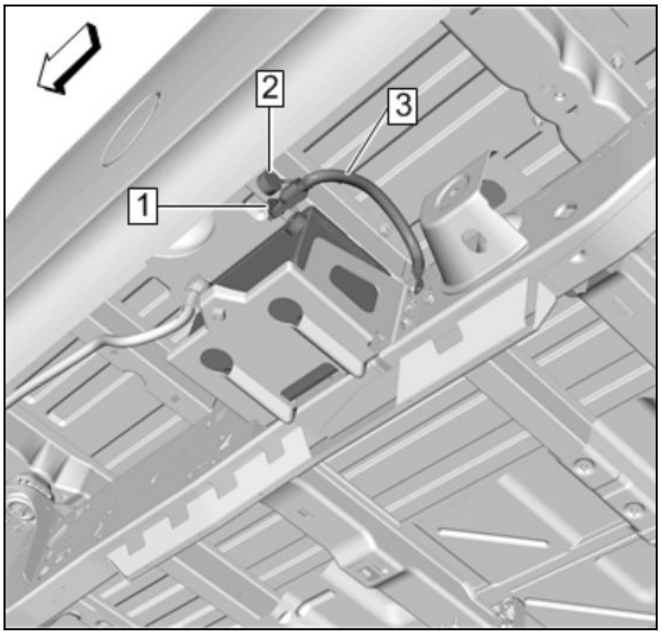

4590701

Note: Clean any existing corrosion from the battery terminal bolt flange and the battery cable end.

1. Auxiliary Battery Negative Cable (3) » Install

Caution: Refer to [Link target (target-id 178169-) not found] .

2. Auxiliary Battery Negative Cable Fastener (1) » Tighten**14** N•m **(124 lb in)**
3. Protective Cap (2) » Install
4. Lower the vehicle.

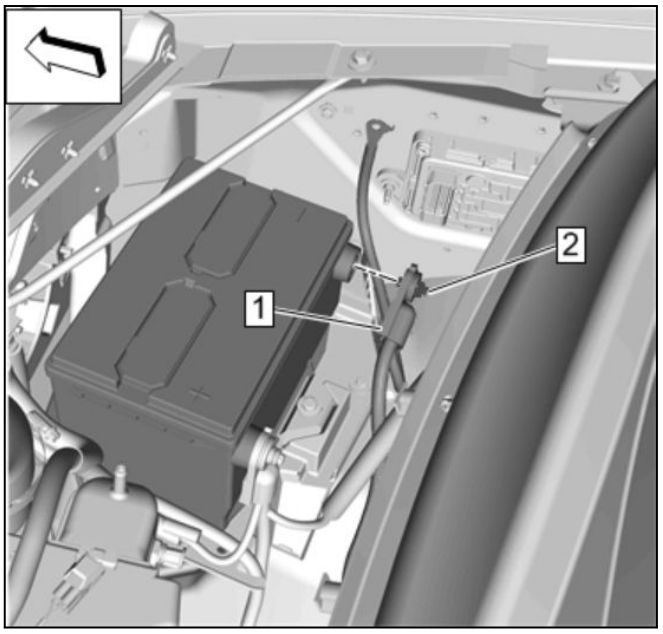

4590700

Note: Clean any existing corrosion from the battery terminal bolt flange and the battery cable end.

5. Battery Negative Cable (1) » Install
6. Battery Negative Cable Fastener (2) » Tighten**13** N•m **(115 lb in)**

Battery Current Sensor Replacement

Removal Procedure

Note: The battery current sensor is a part of the battery negative cable.

1. Disconnect the battery negative cable. *Battery Negative Cable Disconnection and Connection 3-8* *Battery Negative Cable Disconnection and Connection 3-9*

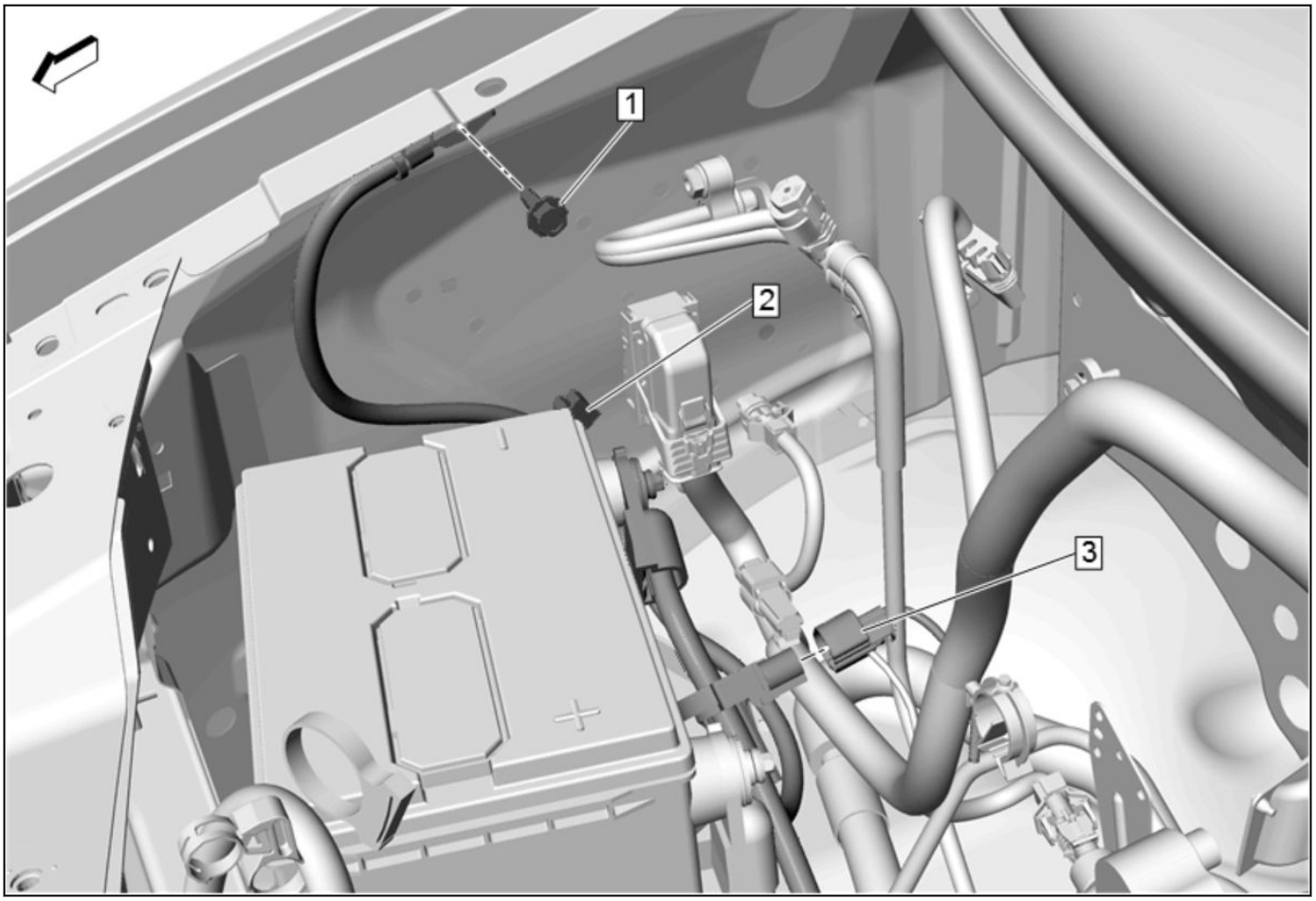

5128767

2. Battery Negative Cable Ground Bolt (1) » Remove
3. Retainer (2) » Disengage
4. Electrical Connector (3) » Disconnect
5. Remove the right front tire and wheel assembly. [Link target (target-id 59611-) not found]

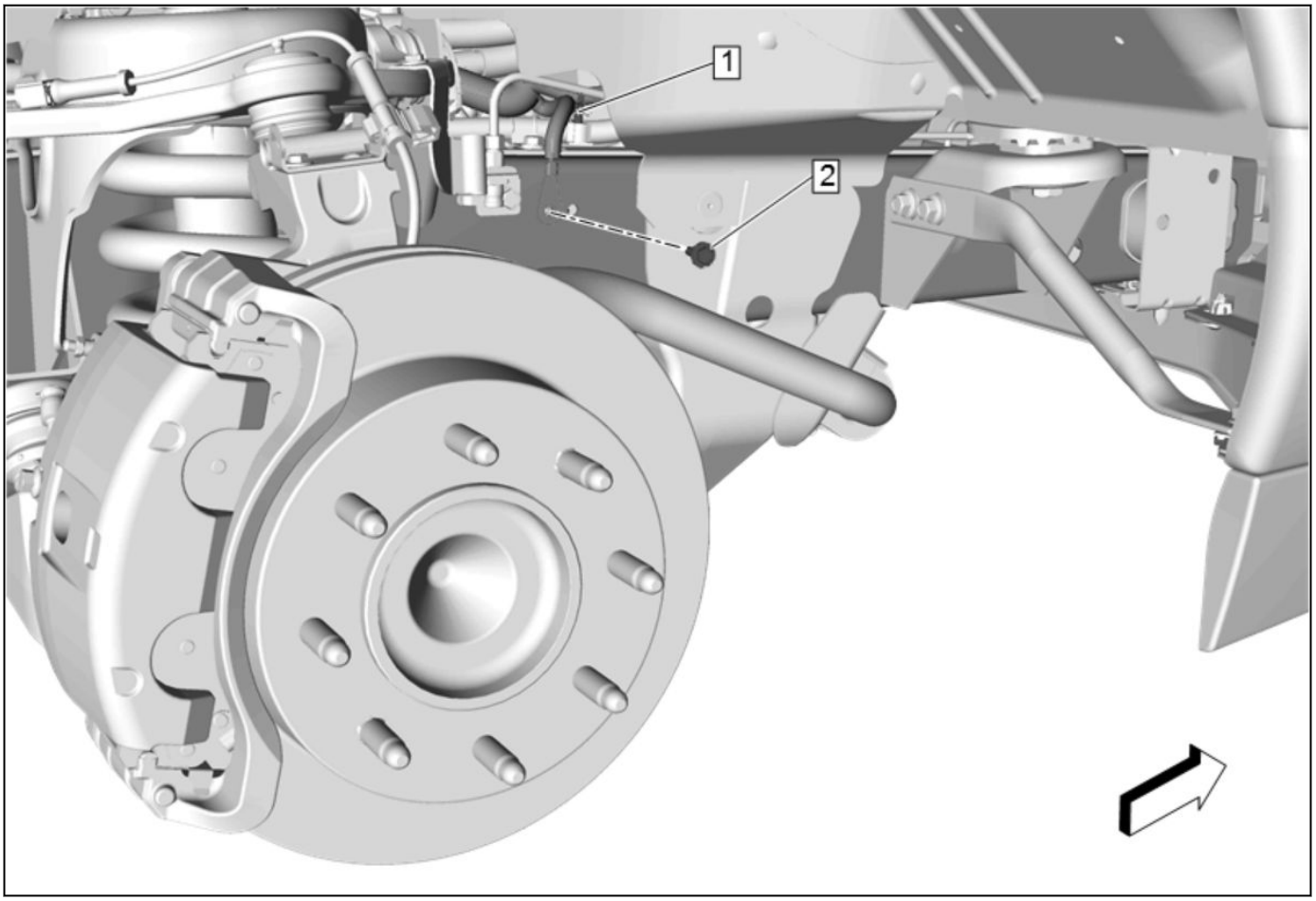

5128775

6. Retainer (1) » Disengage
7. Battery Negative Cable Ground Bolt (2) » Remove

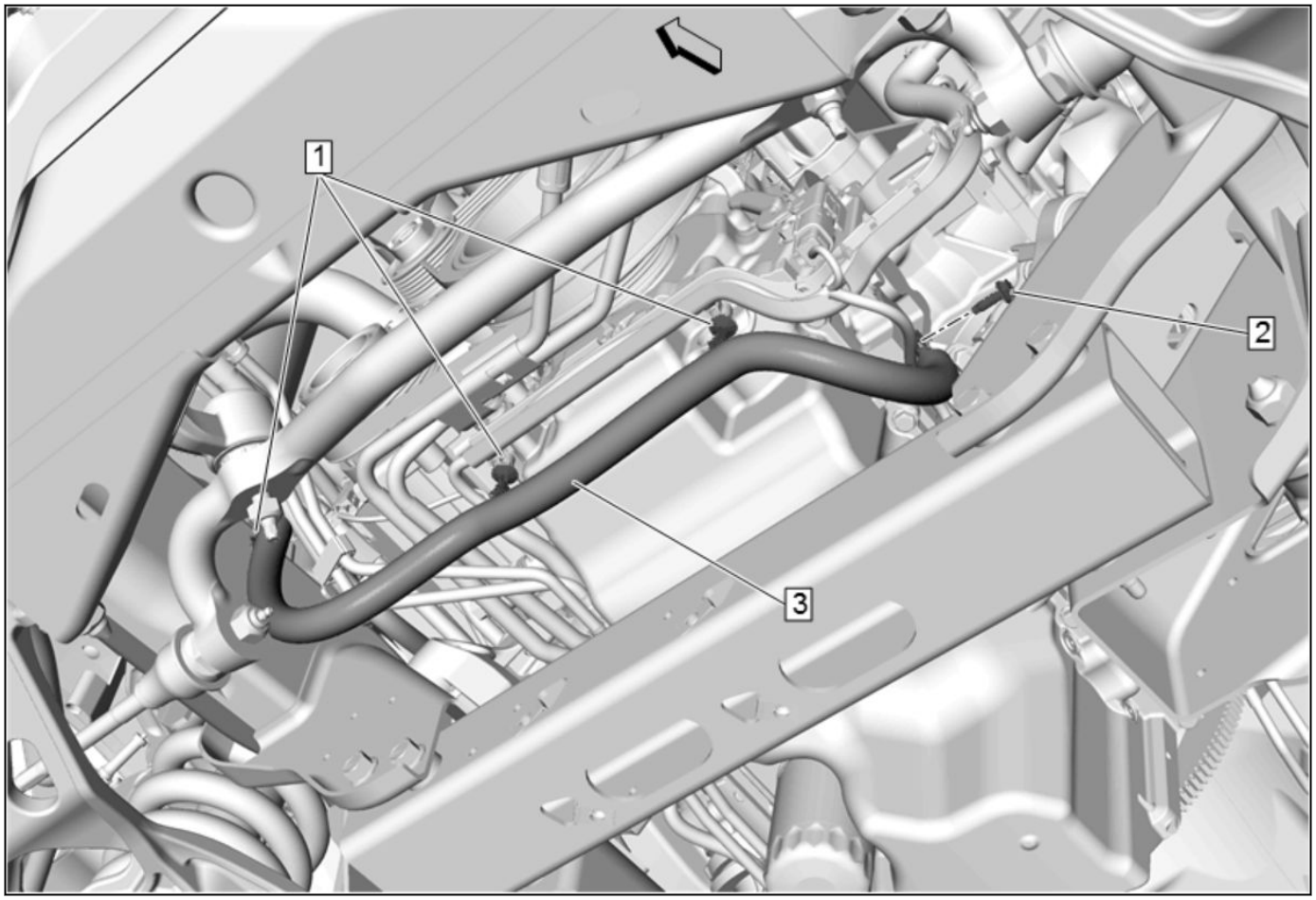

5128780

8. Battery Negative Cable Ground Bolt (2) » Remove
9. Retainer (1) » Disengage[3x]
10. Battery Negative Cable (3) » Remove

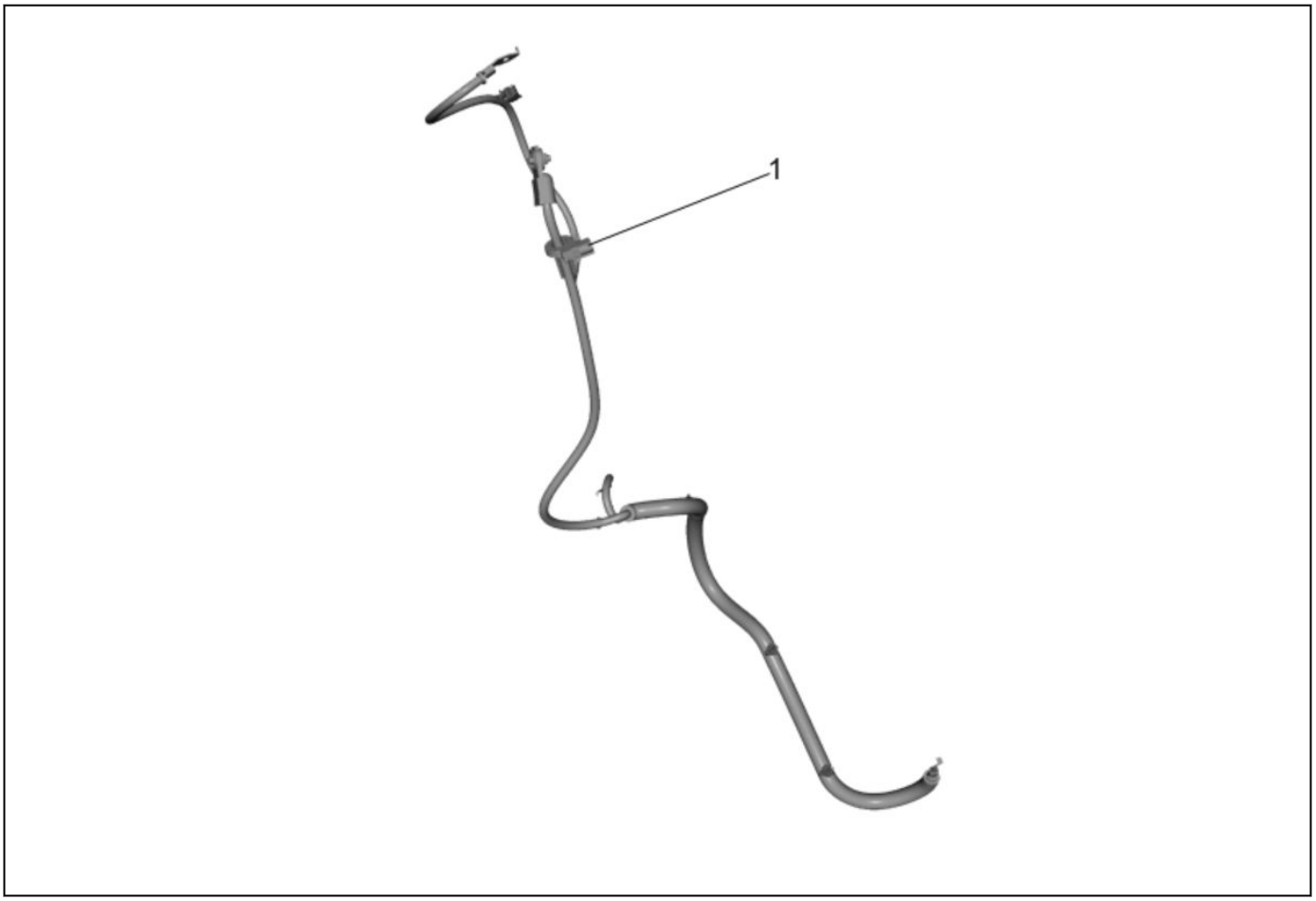

5128851

11. The battery current sensor (1) is a part of the battery negative cable.

Installation Procedure

1. Battery Negative Cable (3) » Install
2. Retainer (1) » Engage[3x]

Caution: Refer to [Link target (target-id 178169-) not found]

3. Battery Negative Cable Ground Bolt (2) » Install and tighten**22** N•m **(16 lb ft)**

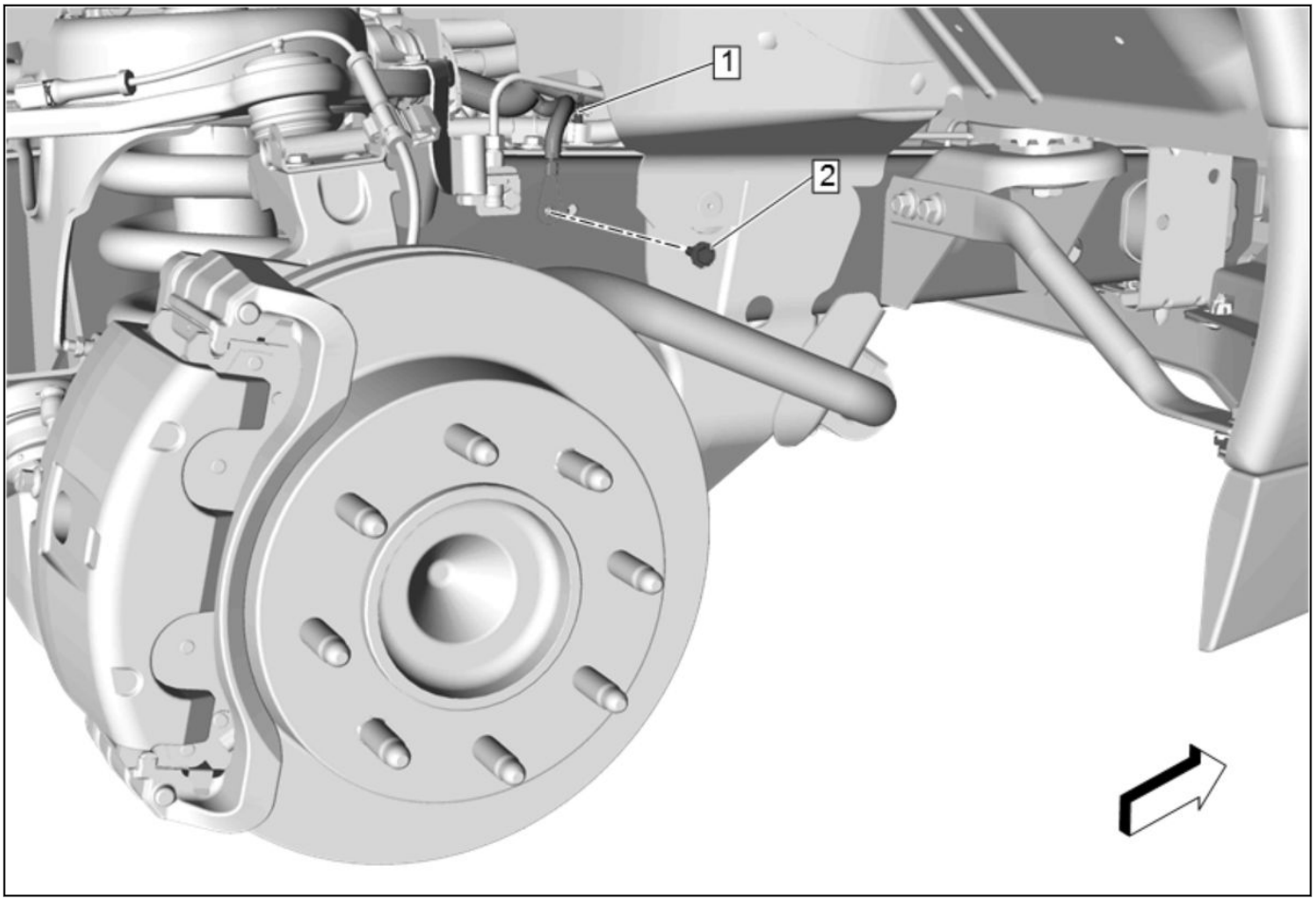

5128775

4. Retainer (1) » Engage
5. Battery Negative Cable Ground Bolt (2) » Install and tighten**10** N•m **(89 lb in)**
6. Install the right front tire and wheel assembly. [Link target (target-id 59611-) not found]
7. Lower the vehicle.

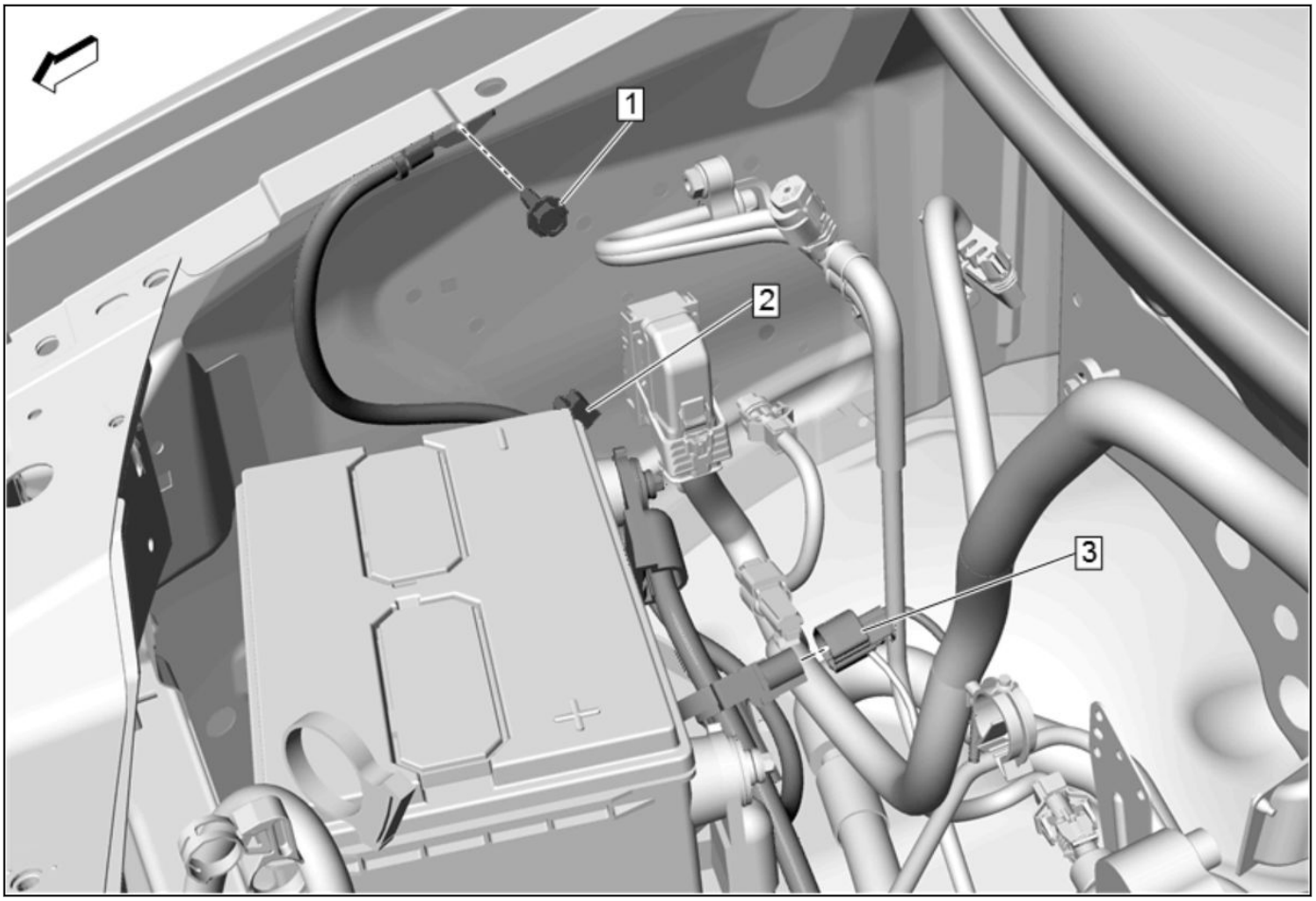

5128767

8. Battery Negative Cable Ground Bolt (1) » Install and tighten**10** N•m **(89 lb in)**
9. Retainer (2) » Engage
10. Electrical Connector (3) » Connect
11. Connect the battery negative cable. *Battery Negative Cable Disconnection and Connection 3-8* *Battery Negative Cable Disconnection and Connection 3-9*

Battery Negative Cable Replacement

Removal Procedure

1. Disconnect the battery negative cable. *Battery Negative Cable Disconnection and Connection 3-8* *Battery Negative Cable Disconnection and Connection 3-9*

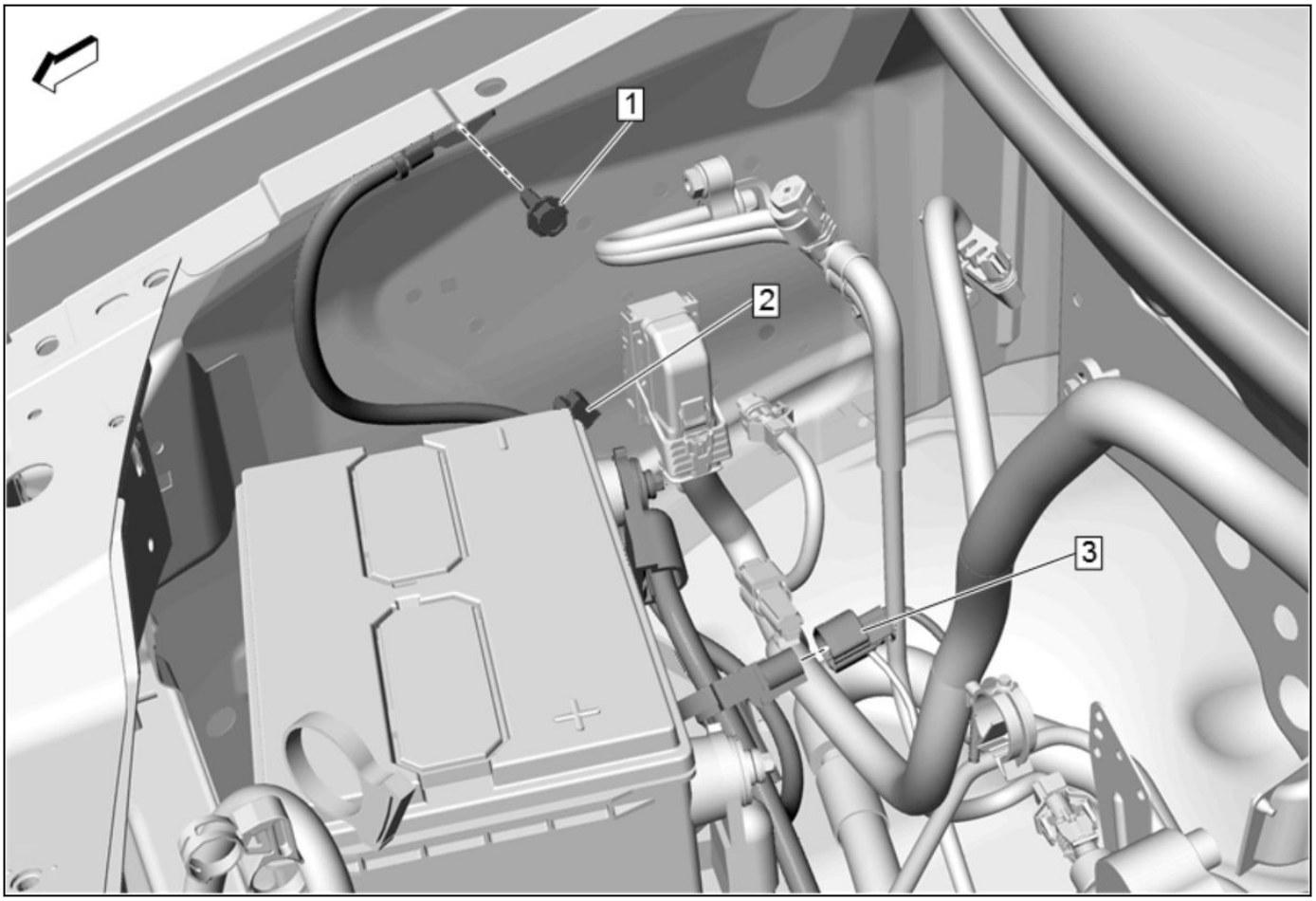

5128767

2. Battery Negative Cable Ground Bolt (1) » Remove
3. Retainer (2) » Disengage
4. Electrical Connector (3) » Disconnect
5. Remove the right front tire and wheel assembly. [Link target (target-id 59611-) not found]

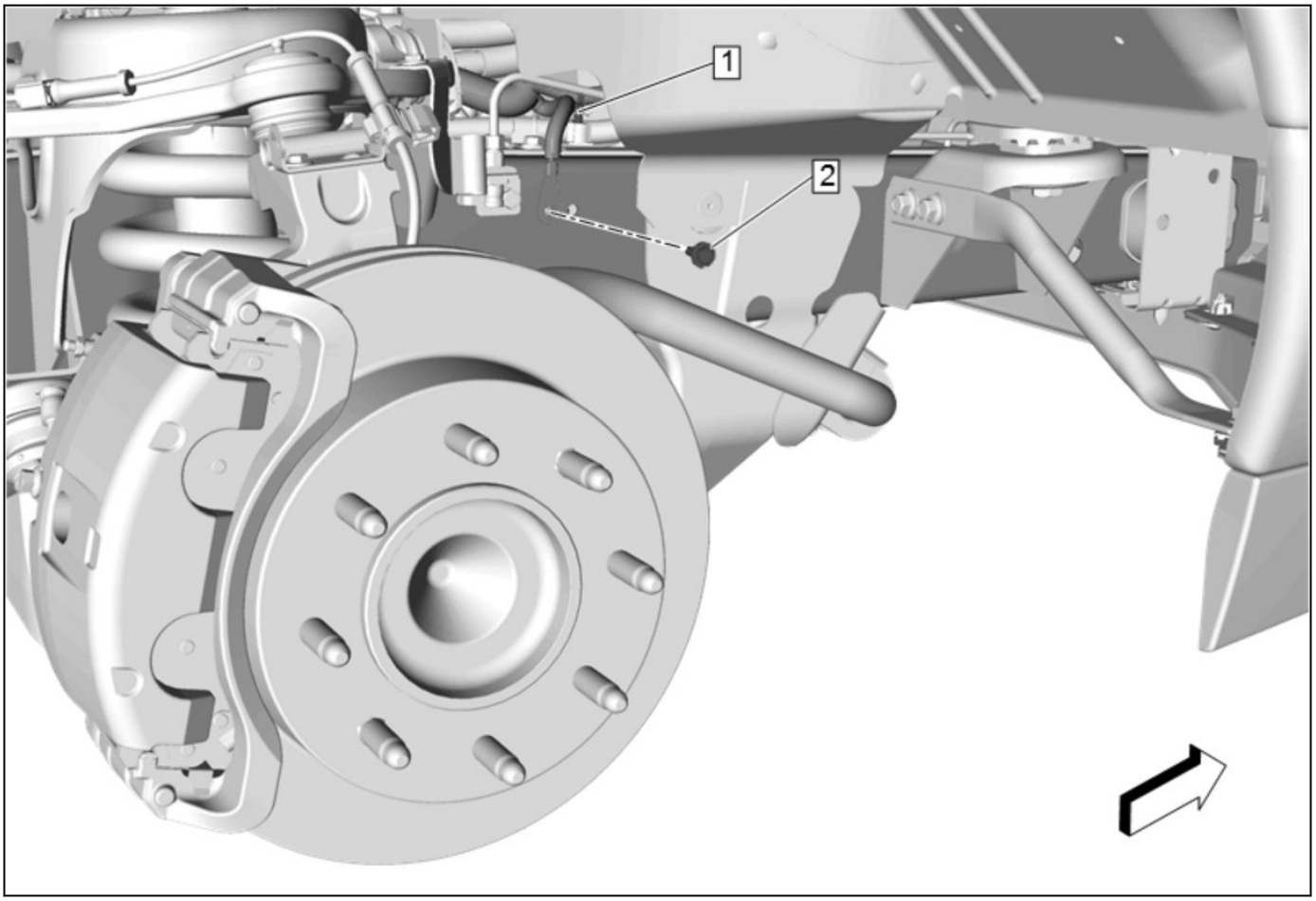

5128775

6. Retainer (1) » Disengage
7. Battery Negative Cable Ground Bolt (2) » Remove

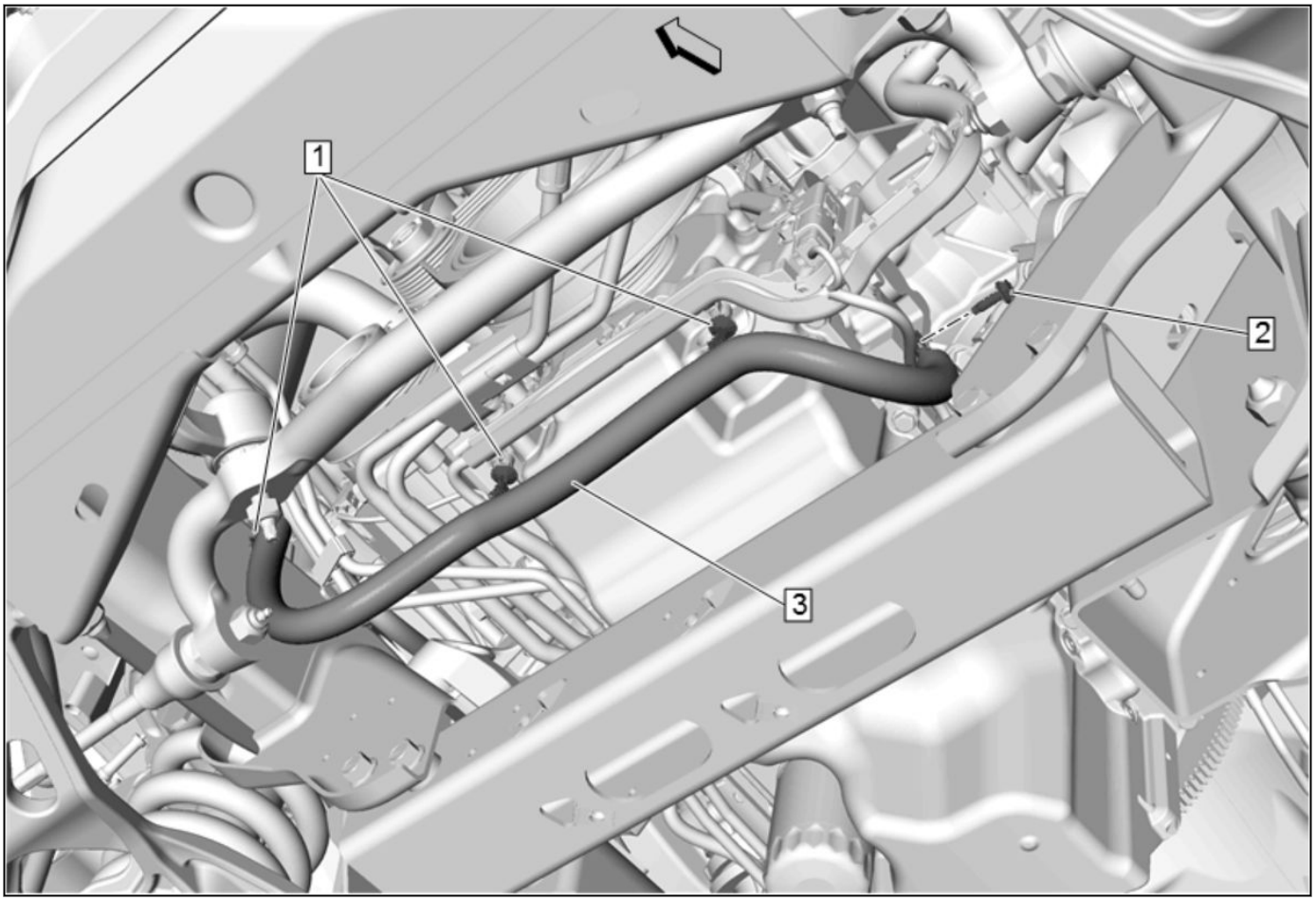

5128780

8. Battery Negative Cable Ground Bolt (2) » Remove
9. Retainer (1) » Disengage[3x]
10. Battery Negative Cable (3) » Remove

Installation Procedure

1. Battery Negative Cable (3) » Install
2. Retainer (1) » Engage[3x]

Caution: Refer to [Link target (target-id 178169-) not found]

3. Battery Negative Cable Ground Bolt (2) » Install and tighten**22** N•m **(16 lb ft)**

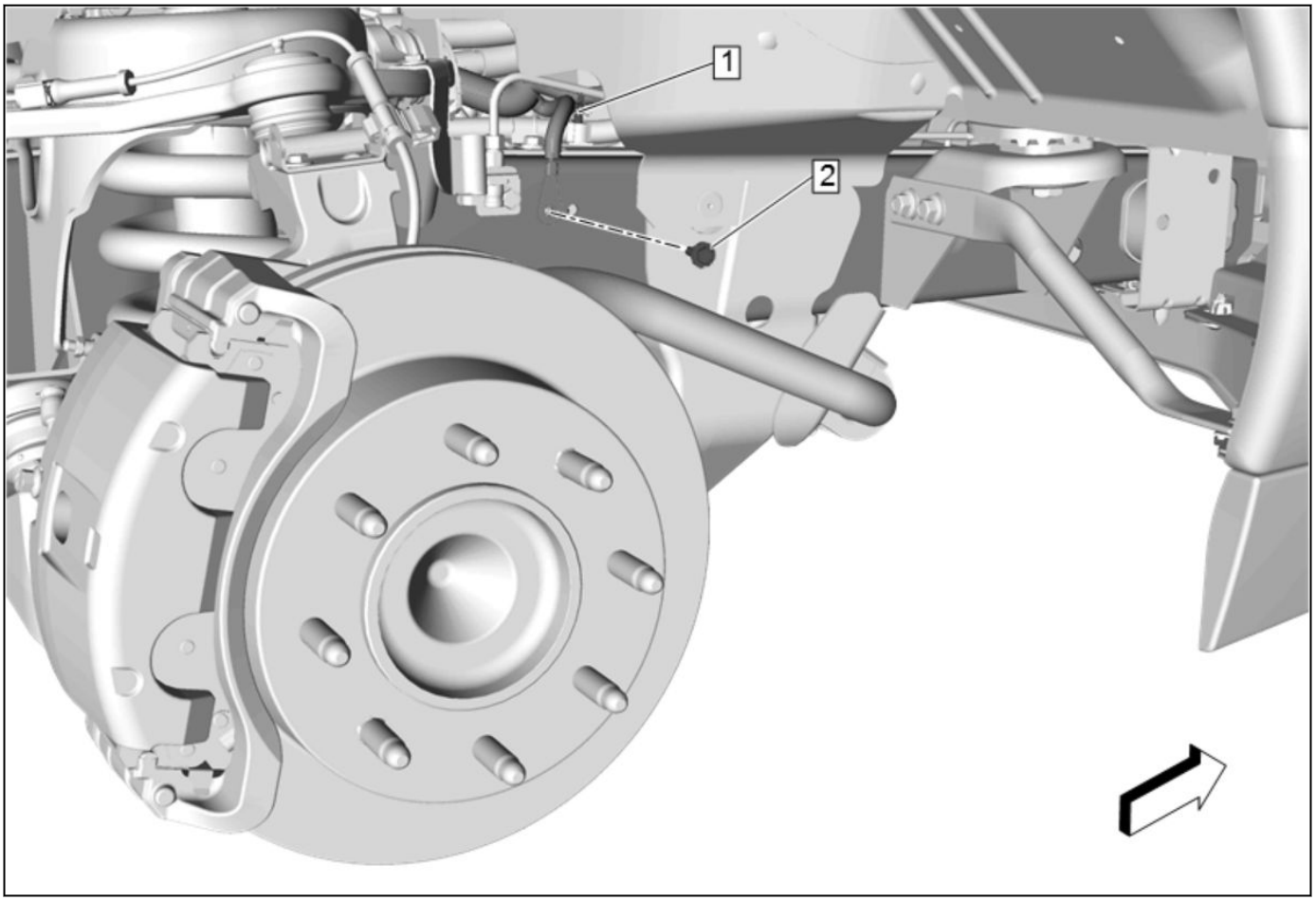

5128775

4. Retainer (1) » Engage
5. Battery Negative Cable Ground Bolt (2) » Install and tighten**10** N•m **(89 lb in)**
6. Install the right front tire and wheel assembly. [Link target (target-id 59611-) not found]
7. Lower the vehicle.

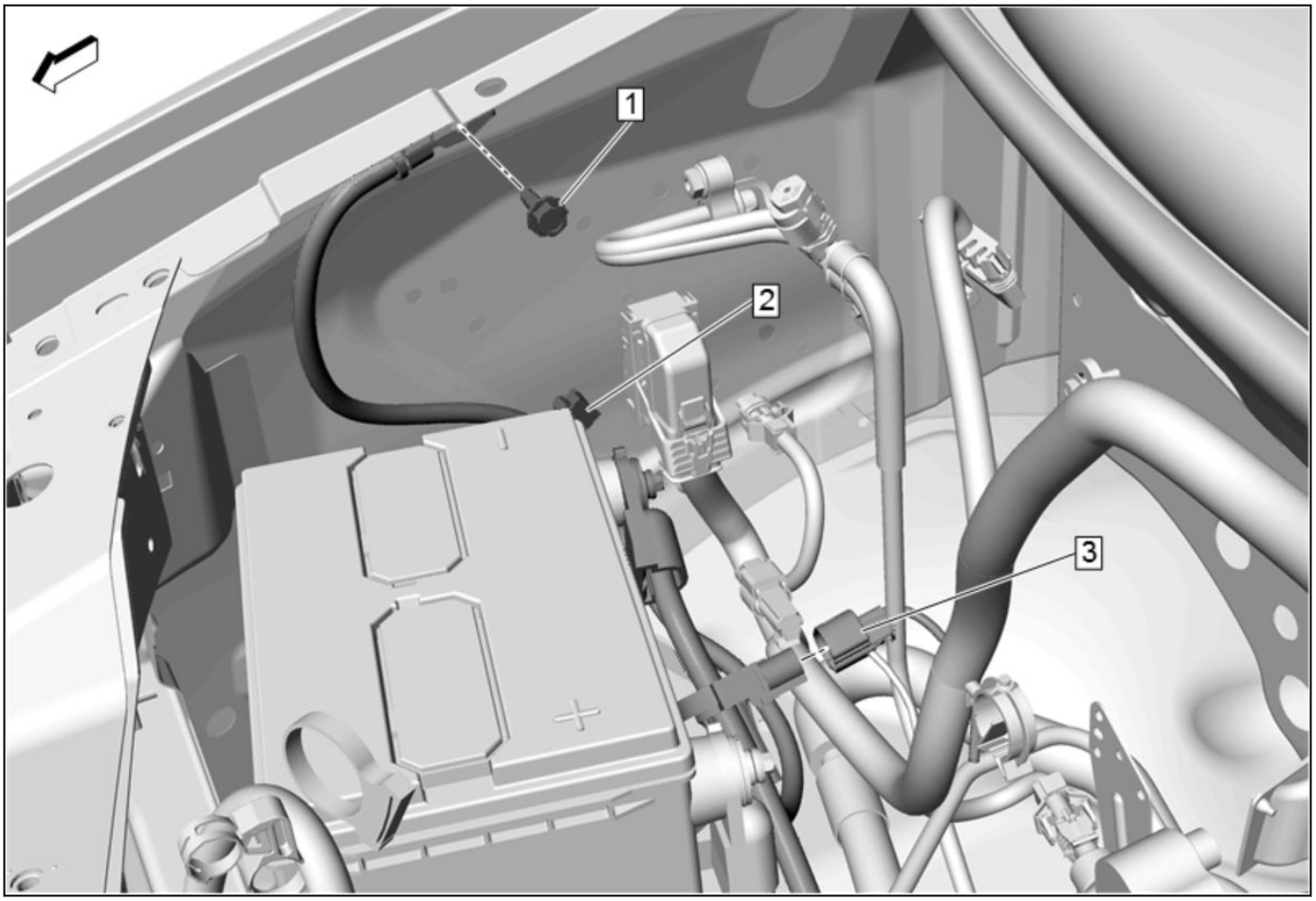

5128767

8. Battery Negative Cable Ground Bolt (1) » Install and tighten**10** N•m **(89 lb in)**
9. Retainer (2) » Engage
10. Electrical Connector (3) » Connect
11. Connect the battery negative cable. *Battery Negative Cable Disconnection and Connection 3-8* *Battery Negative Cable Disconnection and Connection 3-9*

Battery Negative Cable Replacement

Removal Procedure

1. Disconnect the battery negative cable. *Battery Negative Cable Disconnection and Connection 3-8* *Battery Negative Cable Disconnection and Connection 3-9*
2. Without disconnecting the coolant hoses, reposition the coolant recovery reservoir. [Link target (target-id 37161-) not found]

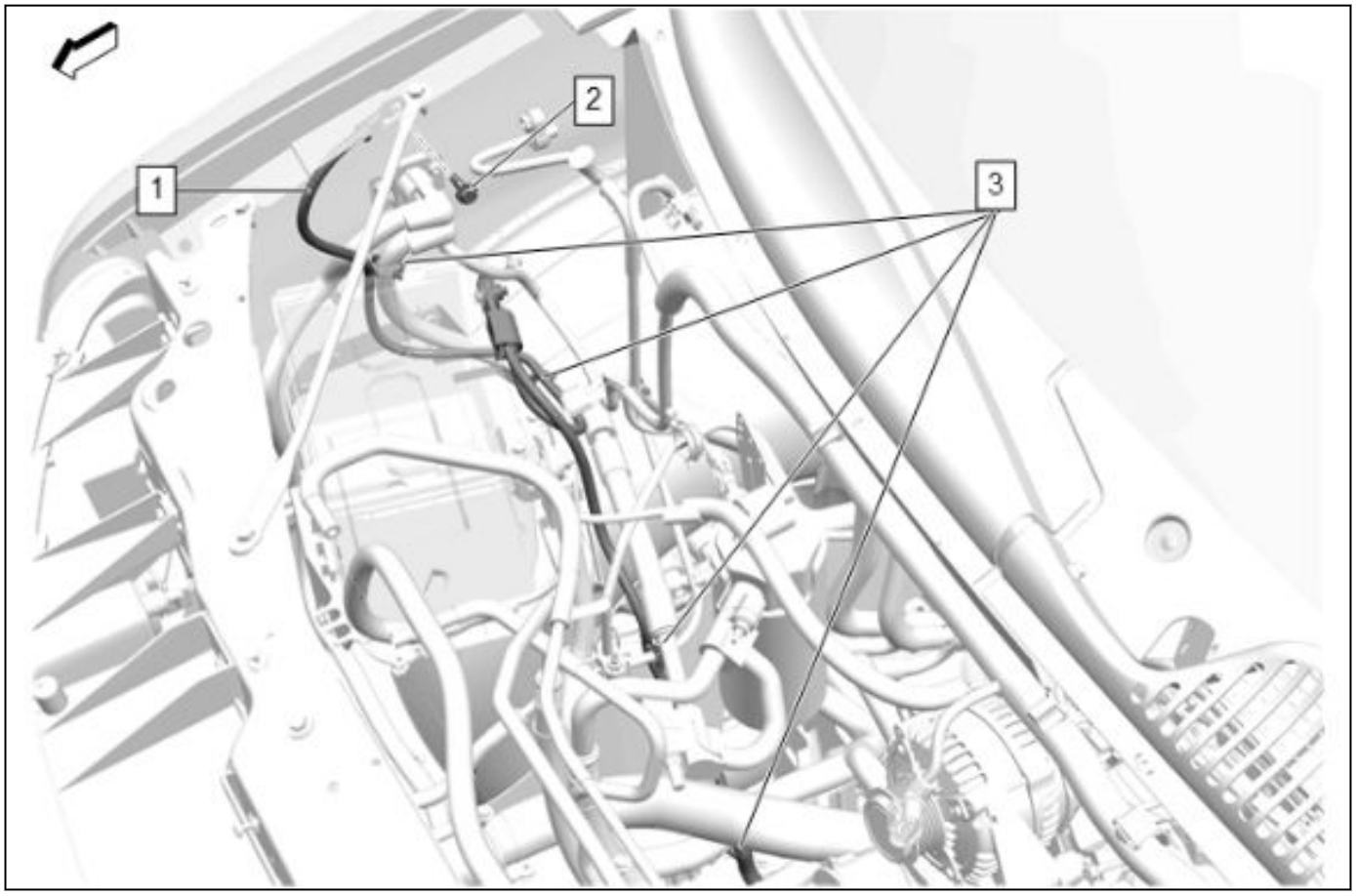

5662757

3. Disconnect the electrical connector and release the wiring harness retainers as necessary.
4. Battery Negative Cable Ground Bolt (2) » Remove
5. Battery Negative Cable (1) » Remove
6. Retainer Clip (3) » Disengage[4x]
7. Raise and support the vehicle. [Link target (target-id 47852-) not found]

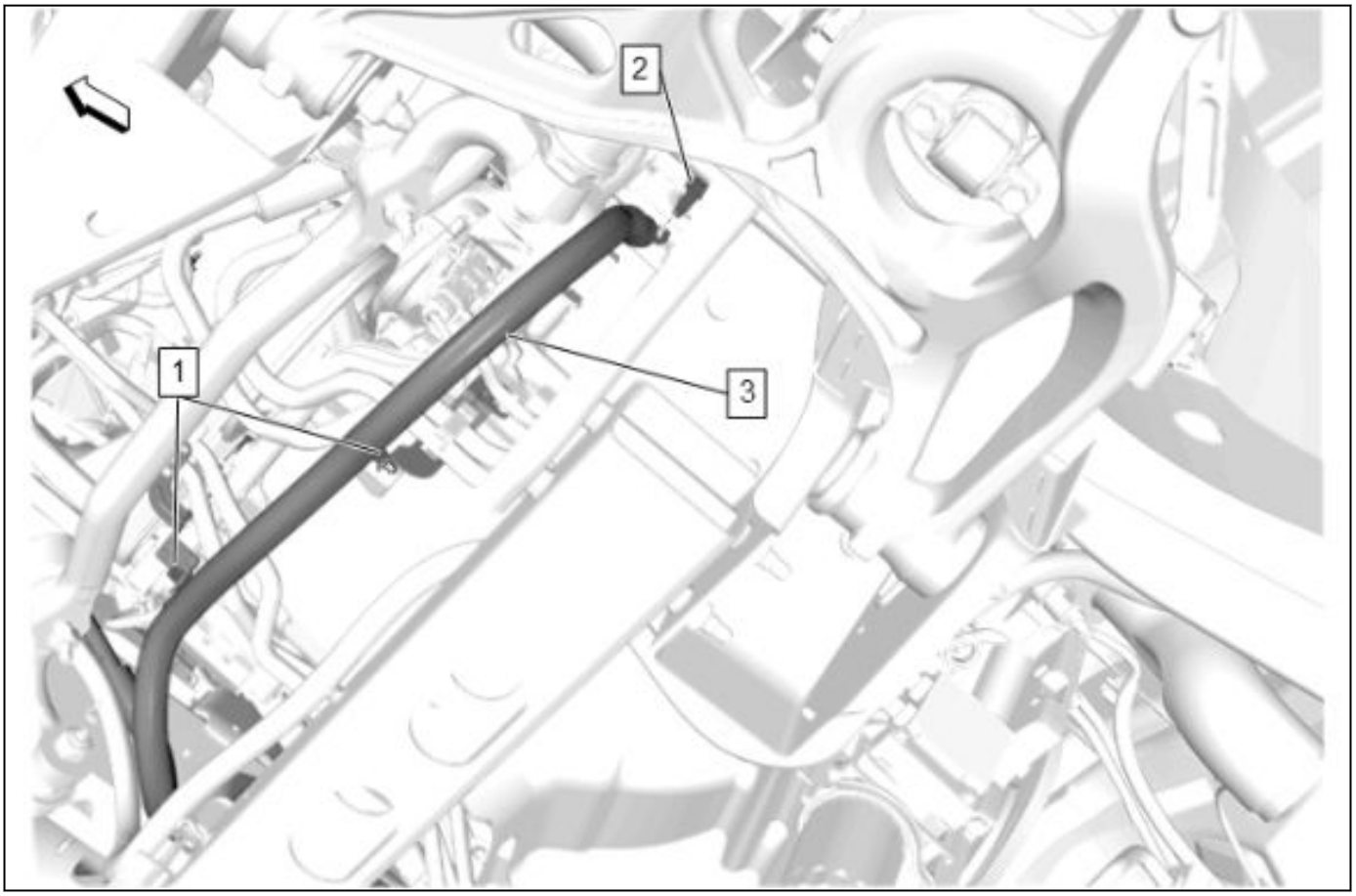

5662774

8. Disconnect the wiring harness retainers as necessary. (1)
9. Battery Negative Cable Ground Bolt @ Engine Block (2) » Remove
10. Battery Negative Cable (3) » Remove

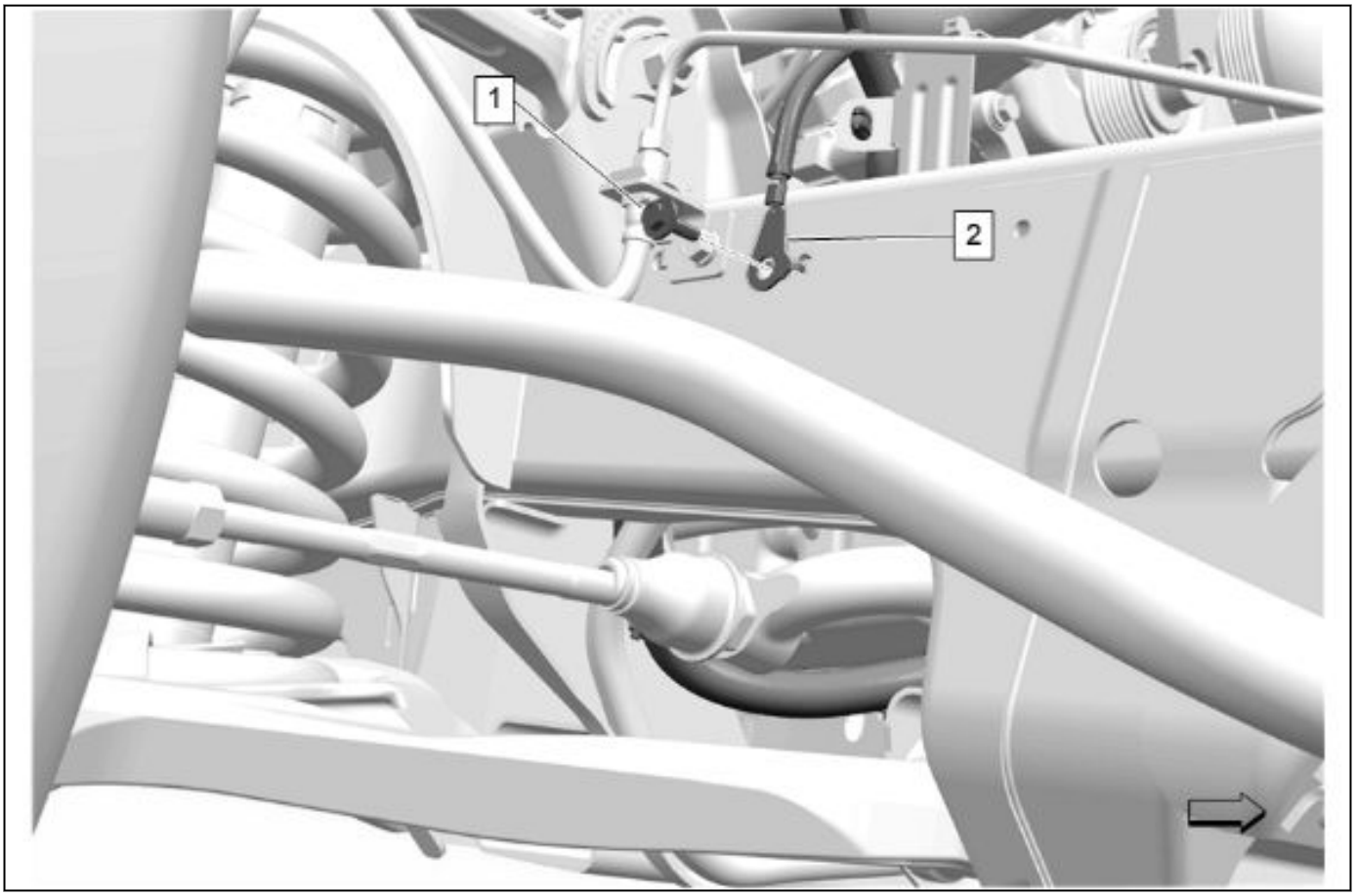

6367580

11. Battery Negative Cable Ground Bolt @ Frame (1) » Remove
12. Battery Negative Cable (2) » Remove
13. Lower the vehicle.

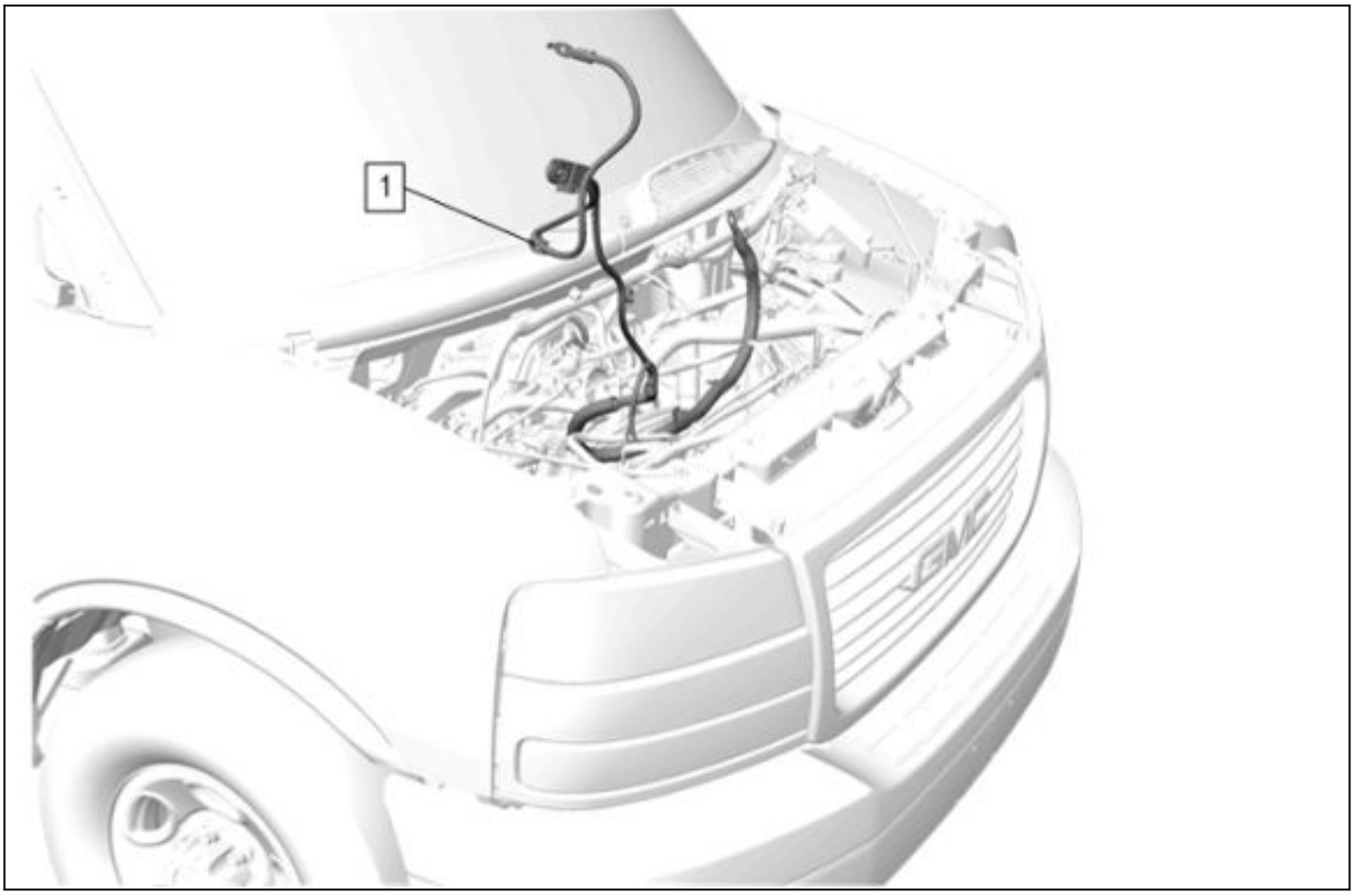

5662783

14. Battery Negative Cable (1) » Remove

Installation Procedure

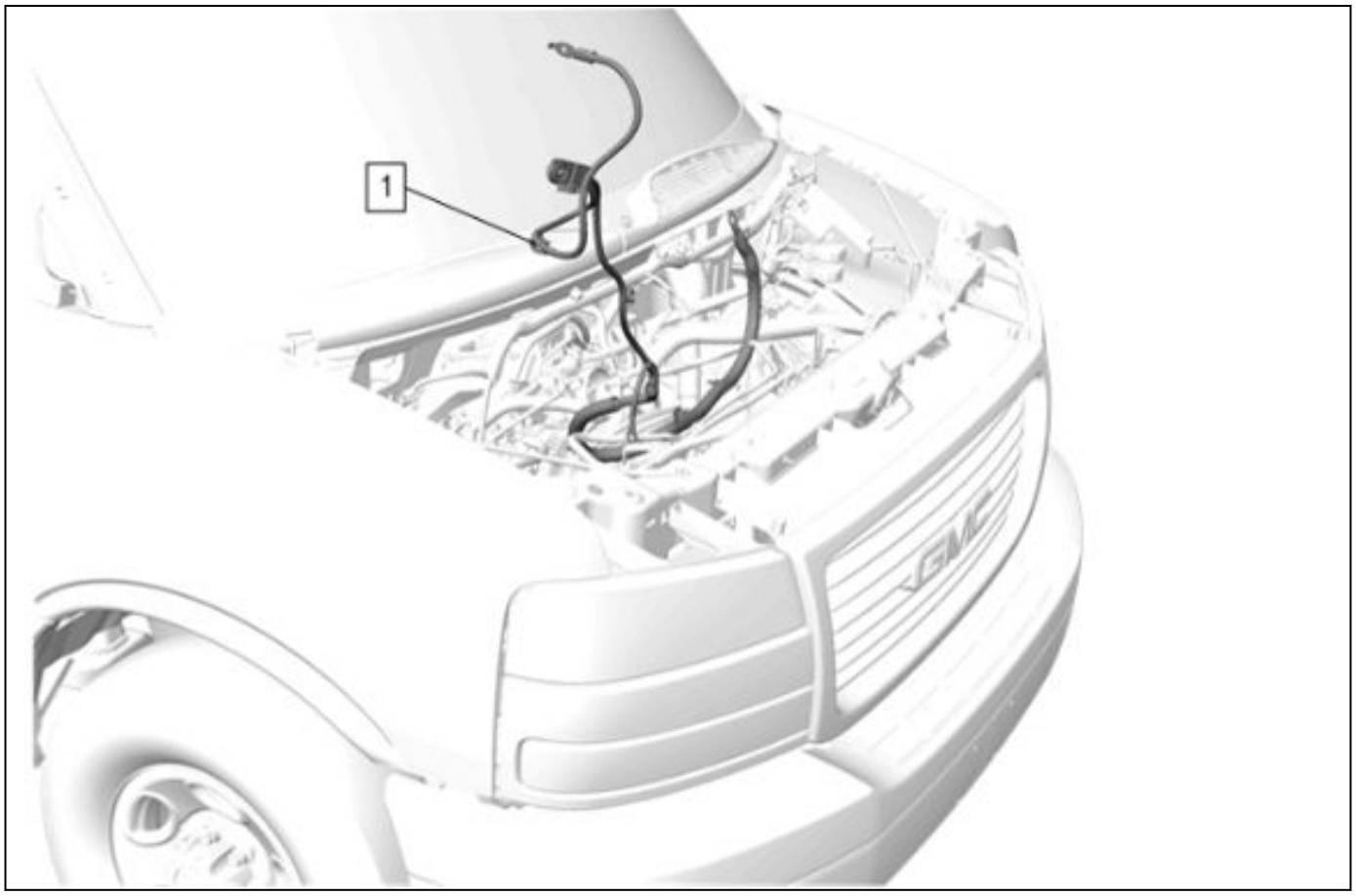

5662783

1. Battery Negative Cable (1) » Install
2. Raise and support the vehicle. [Link target (target-id 47852-) not found]

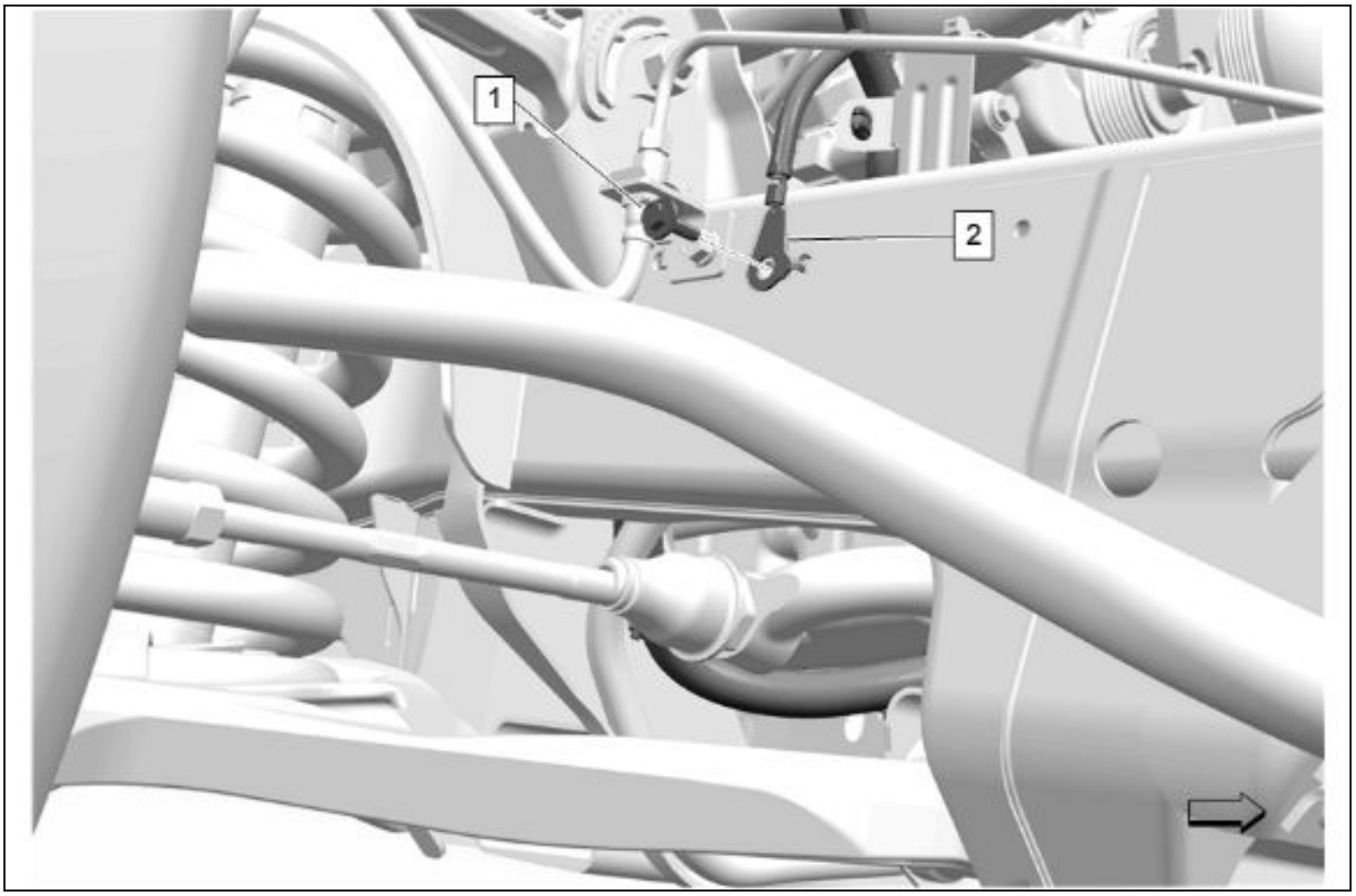

6367580

3. Battery Negative Cable (2) » Install

Caution: Refer to [Link target (target-id 178169-) not found]

4. Battery Negative Cable Ground Bolt @ Frame (1) » Install and tighten **10** N•m **(89 lb in)**

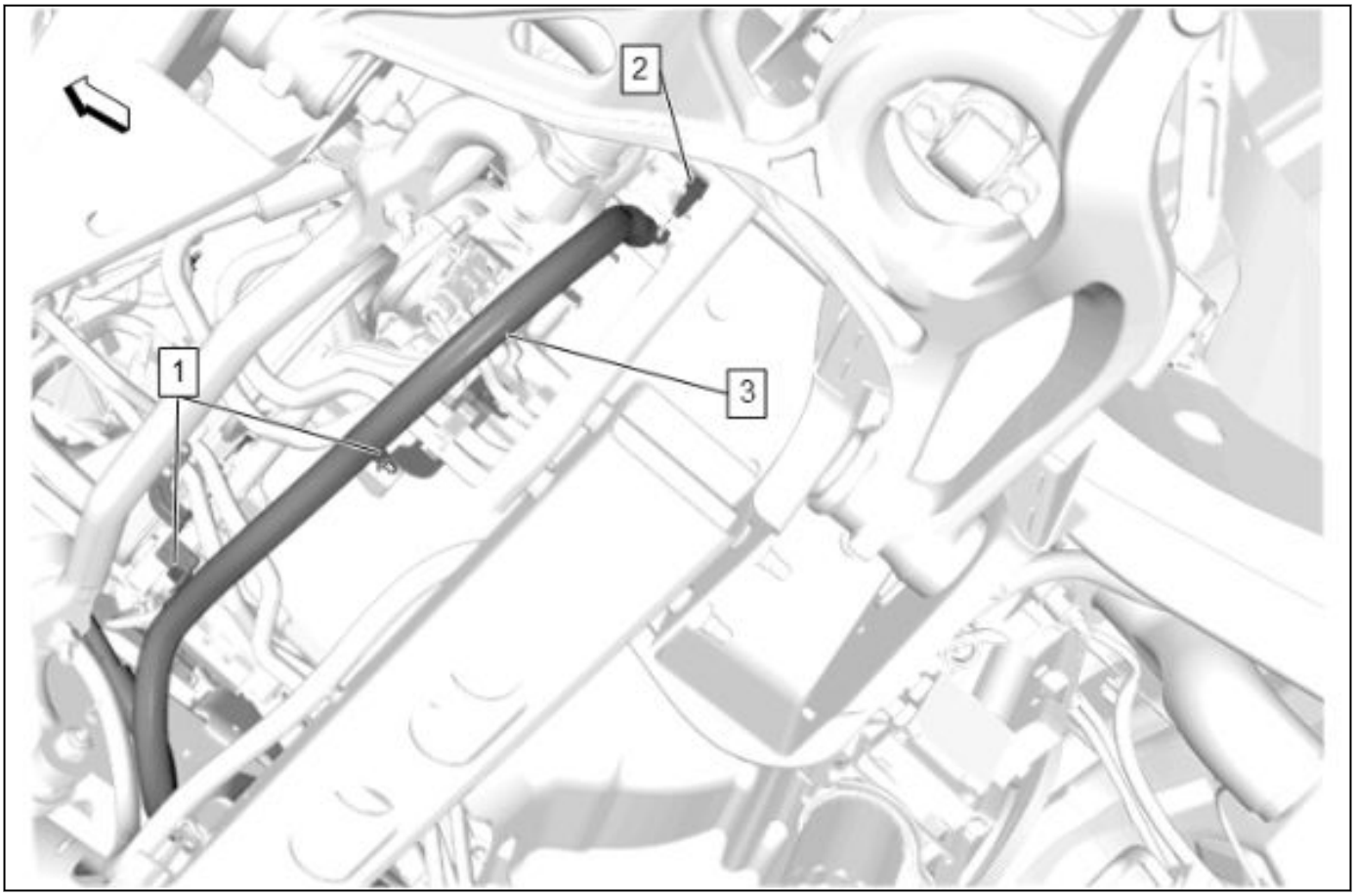

5662774

5. Battery Negative Cable (3) » Install
6. Battery Negative Cable Ground Bolt @ Engine Block (2) » Install and tighten**40** N•m **(30 lb ft)**
7. Connect the wiring harness retainers as necessary.
8. Lower the vehicle.

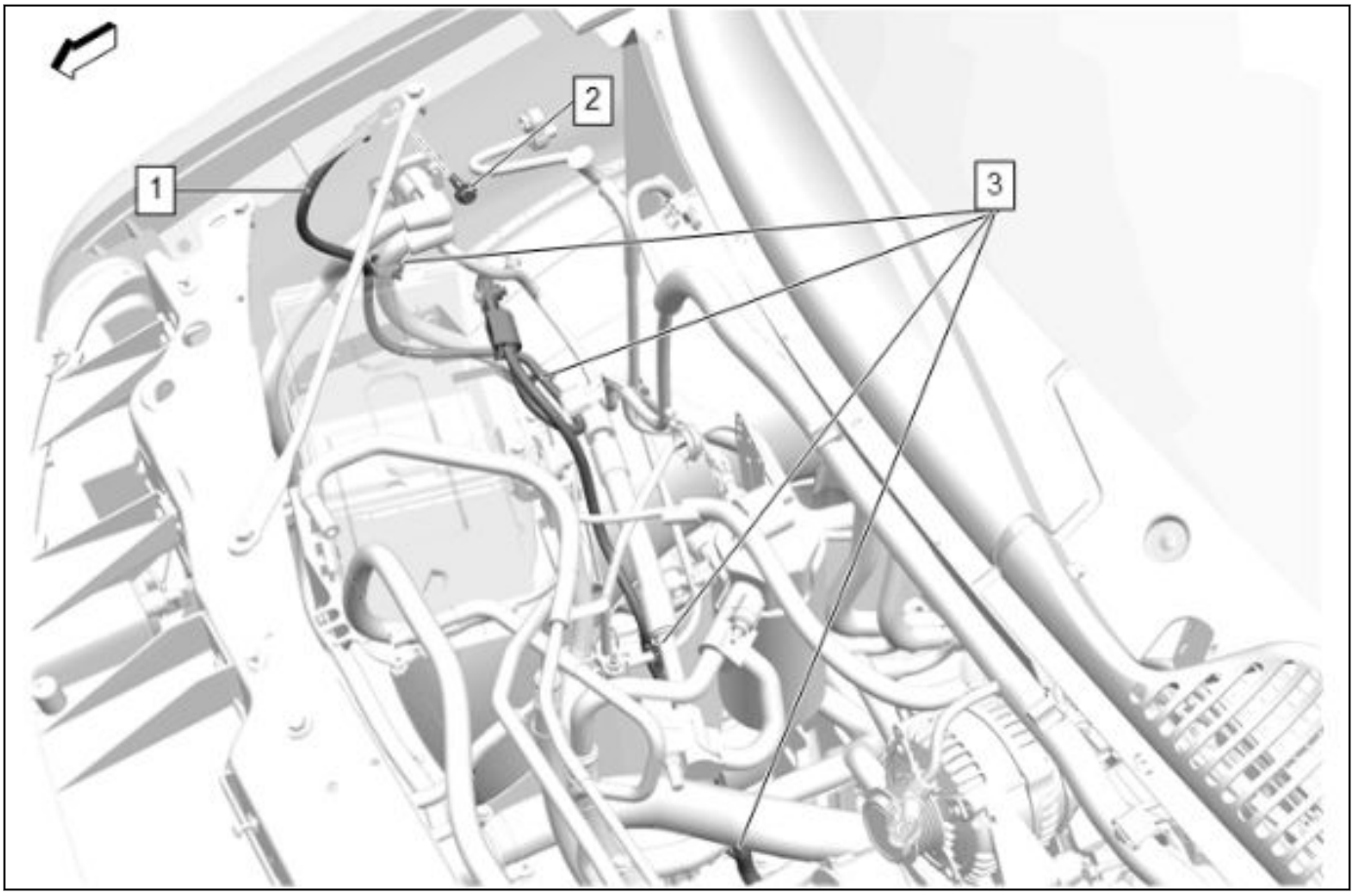

5662757

9. Battery Negative Cable (1) » Install
10. Battery Negative Cable Ground Bolt (2) » Install and tighten**22** N•m **(16 lb ft)**
11. Retainer Clip (3) » Engage[4x]
12. Connect the electrical connectors and install the wiring harness retainers as necessary.
13. Install the coolant recovery reservoir. [Link target (target-id 37161-) not found]
14. Connect the battery negative cable. *Battery Negative Cable Disconnection and Connection 3-8* *Battery Negative Cable Disconnection and Connection 3-9*

Auxiliary Battery Negative Cable Replacement

Removal Procedure

1. Disconnect the primary battery negative cable. *Battery Negative Cable Disconnection and Connection 3-8* *Battery Negative Cable Disconnection and Connection 3-9*
2. Raise and support the vehicle. [Link target (target-id 47852-) not found]

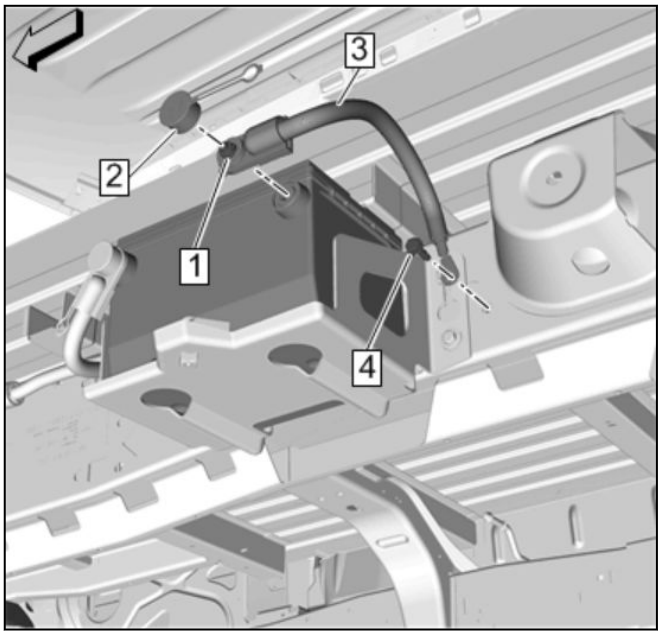

4595994

3. Protective Cap (2) » Reposition
4. Auxiliary Battery Negative Cable Fastener (1) » Remove
5. Auxiliary Battery Negative Cable Bolt (4) » Remove
6. Auxiliary Battery Negative Cable (3) » Remove

Installation Procedure

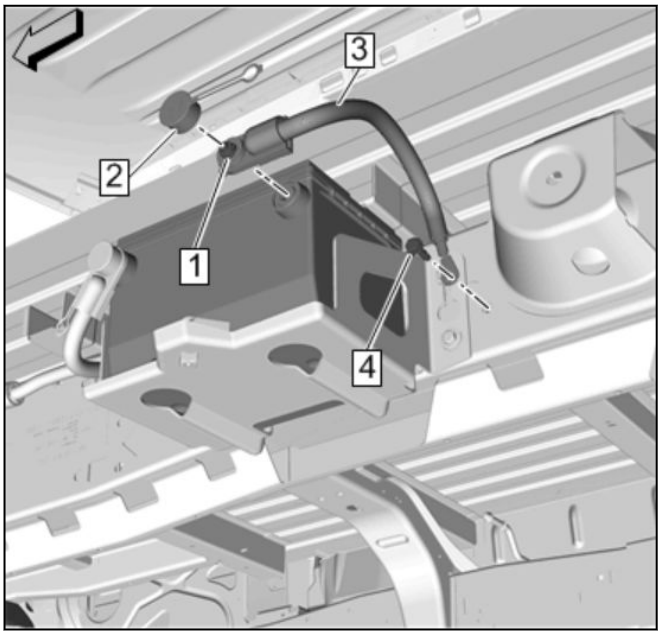

4595994

1. Auxiliary Battery Negative Cable (3) » Install

Caution: Refer to [Link target (target-id 178169-) not found] .

2. Auxiliary Battery Negative Cable Bolt (4) » Install and tighten**17** N•m **(13 lb ft)**
3. Auxiliary Battery Negative Cable Fastener (1) » Install and tighten**14** N•m **(124 lb in)**
4. Protective Cap (2) » Install
5. Lower the vehicle.
6. Connect the primary battery negative cable. *Battery Negative Cable Disconnection and Connection 3-8* *Battery Negative Cable Disconnection and Connection 3-9*

Battery Positive Cable Replacement

Removal Procedure

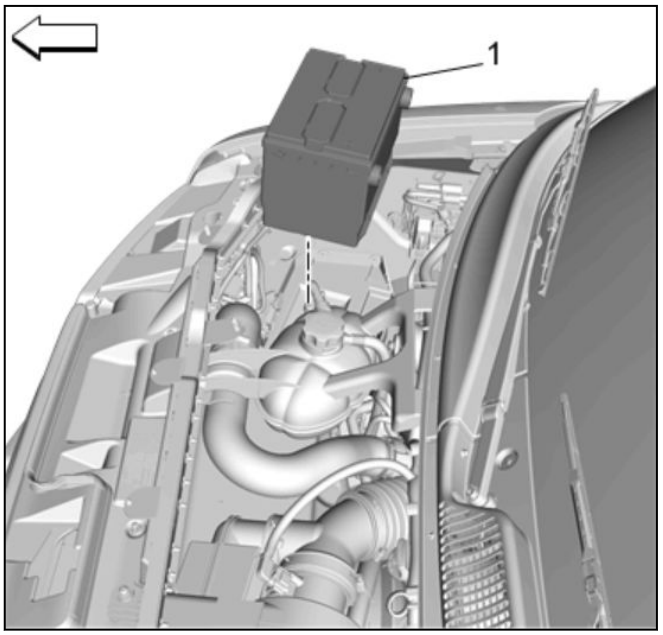

4597853

1. Remove the battery. *Battery Replacement 3-85*

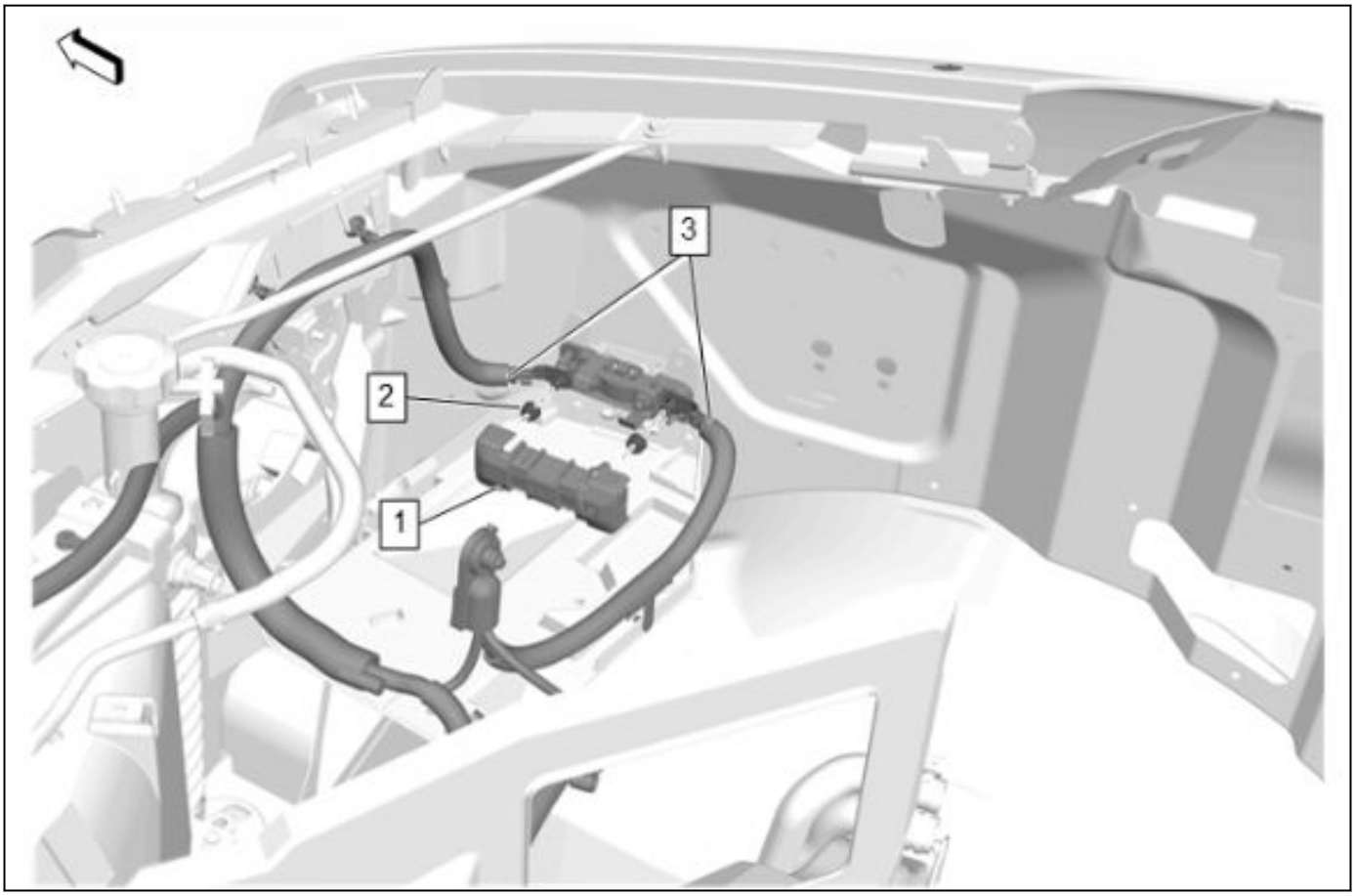

5694205

2. Front Compartment Fuse Block Cover(1) » Remove
3. Front Compartment Fuse Block Cable Nut (2) » Remove[2x]
4. Battery Positive Cable (3) » Remove[2x]

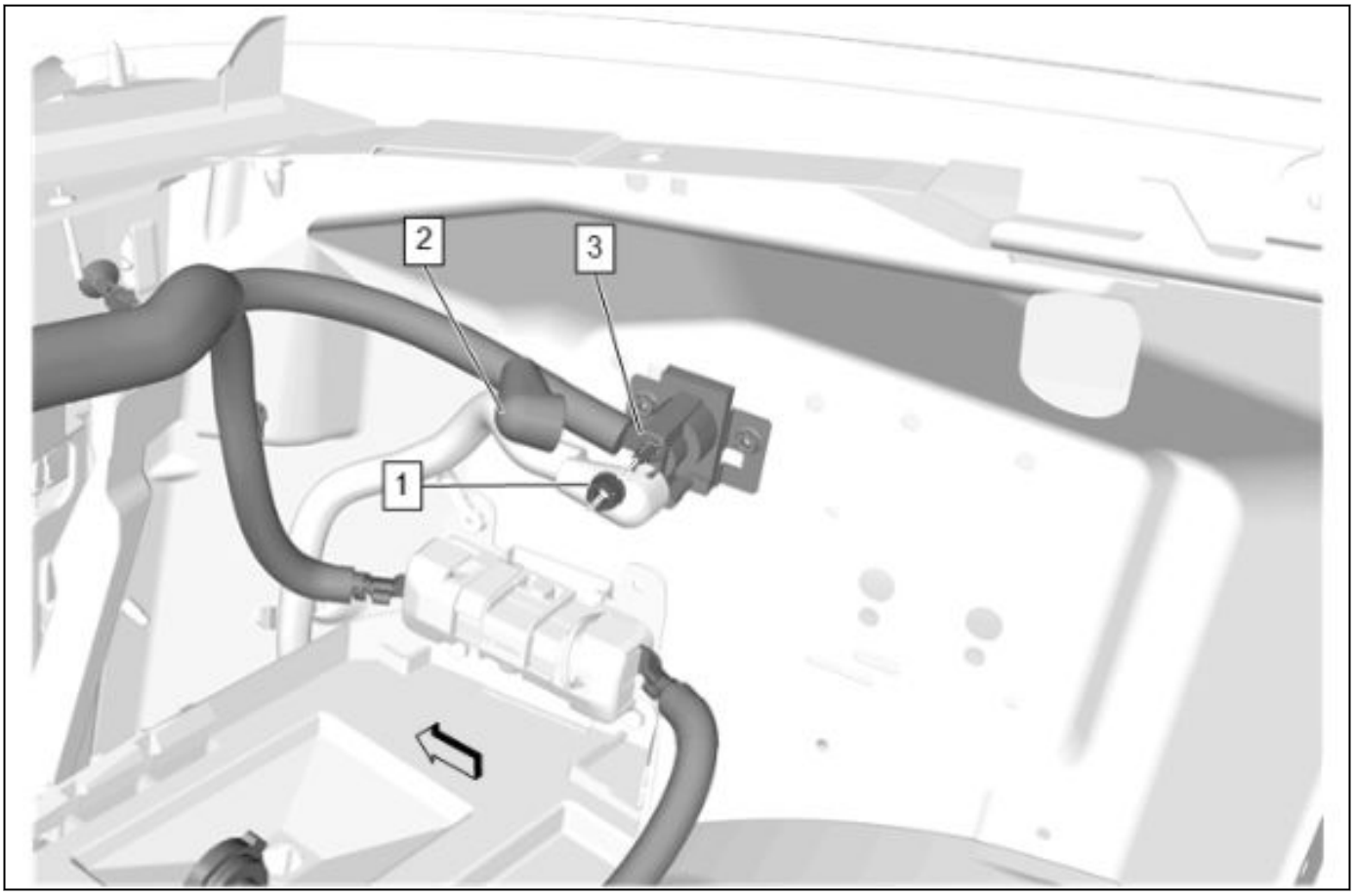

5694708

5. Reposition the protective sleeve (2).
6. Battery Positive Cable Nut (1) » Remove
7. Battery Positive Cable (3) » Remove

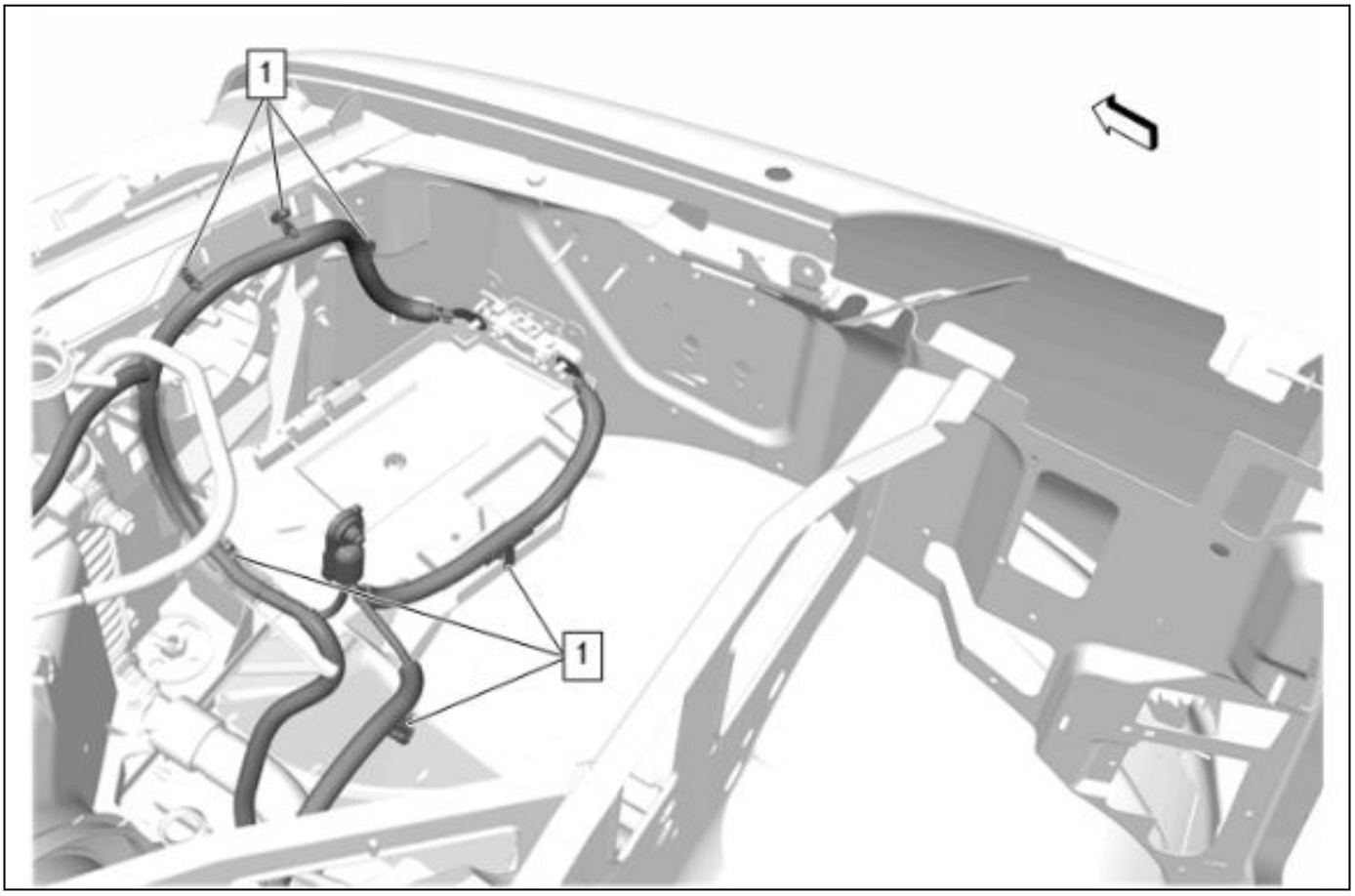

5694656

8. Retainer (1) » Remove[6x]

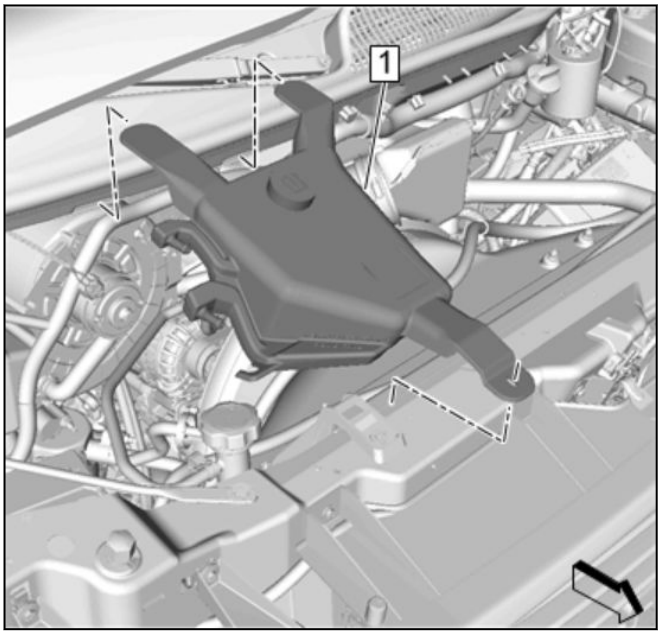

4840951

9. Coolant Recovery Reservoir (1) » Reposition—[Link target (target-id 37161-) not found]

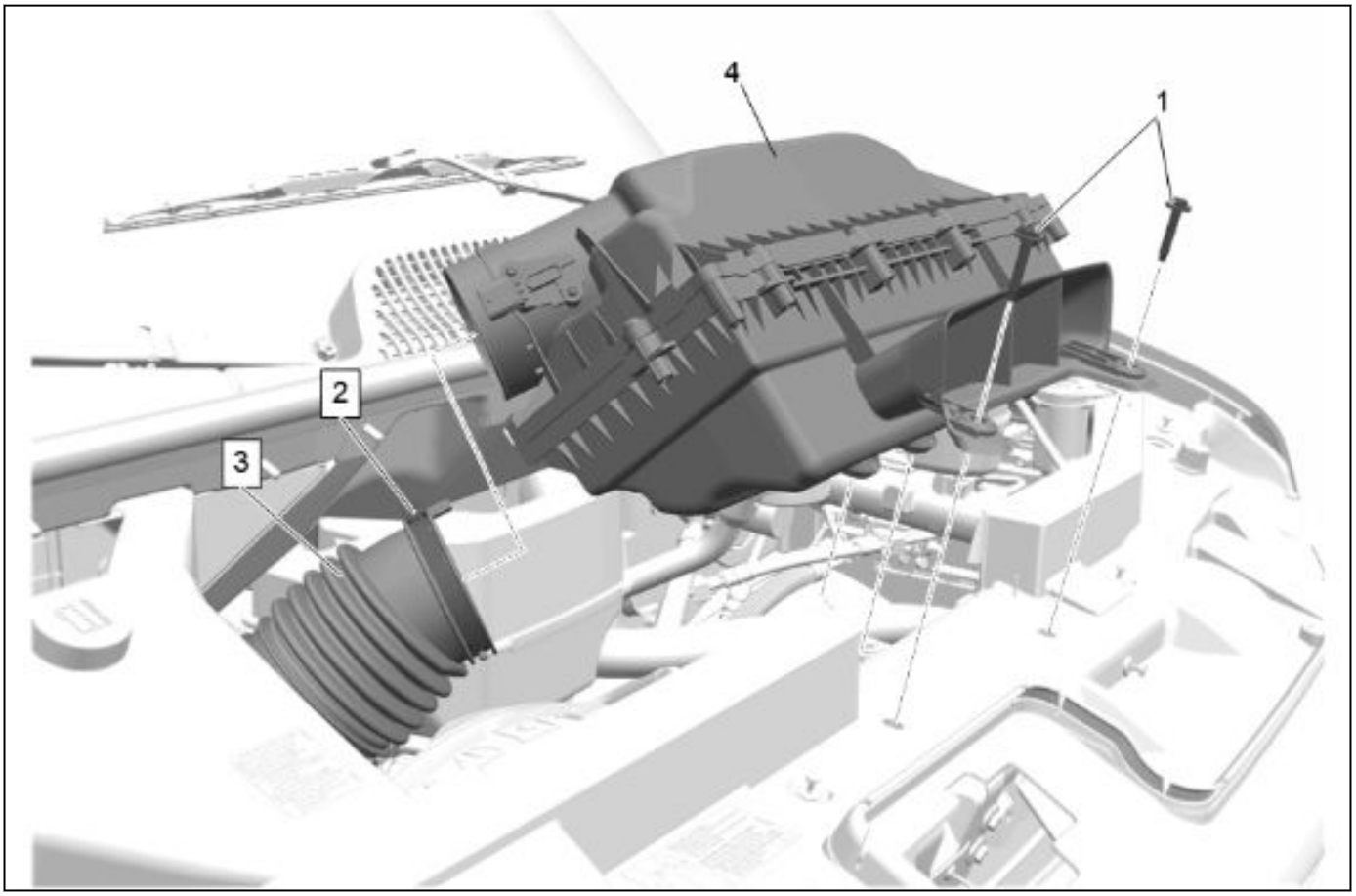

5659969

10. Air Cleaner Assembly (4) » Remove— [Link target (target-id 227726-) not found]

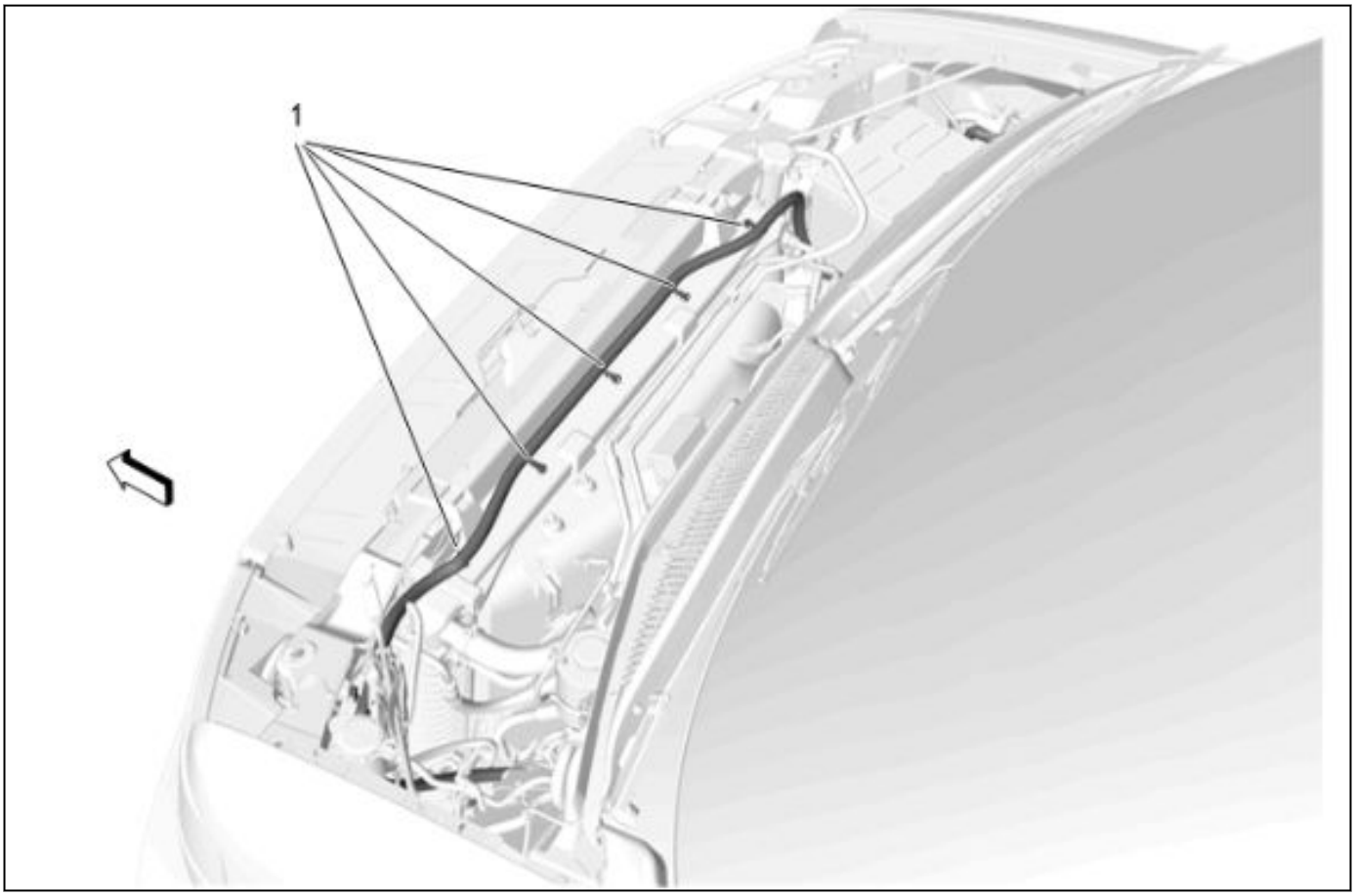

5662352

11. Battery Positive Cable Retainer (1) »
    Disengage[5x]

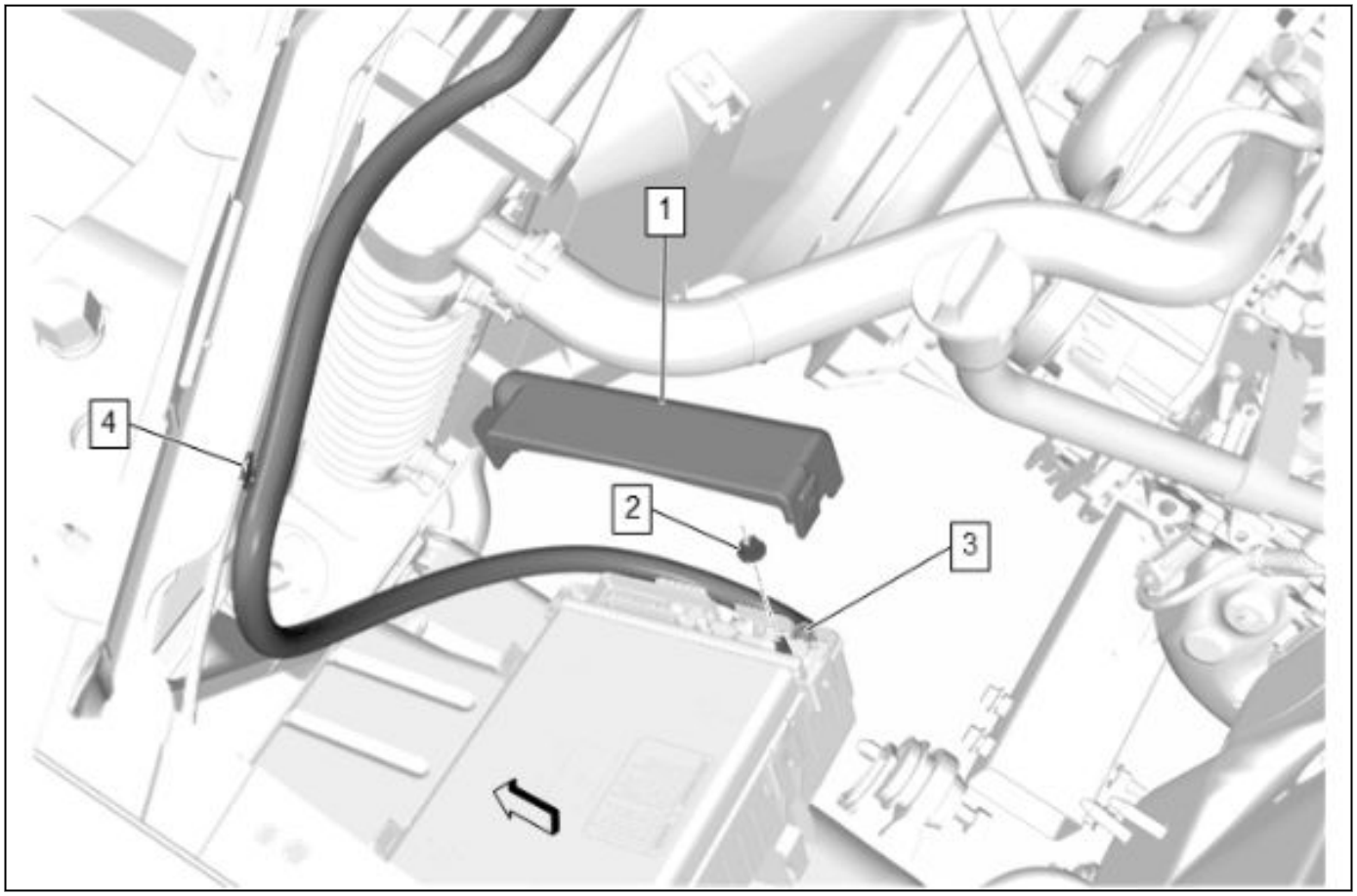

5694639

12. Accessory Wiring Junction Block Cover (1) » Remove
13. Battery Positive Cable Nut (2) » Remove
14. Battery Positive Cable (3) » Remove

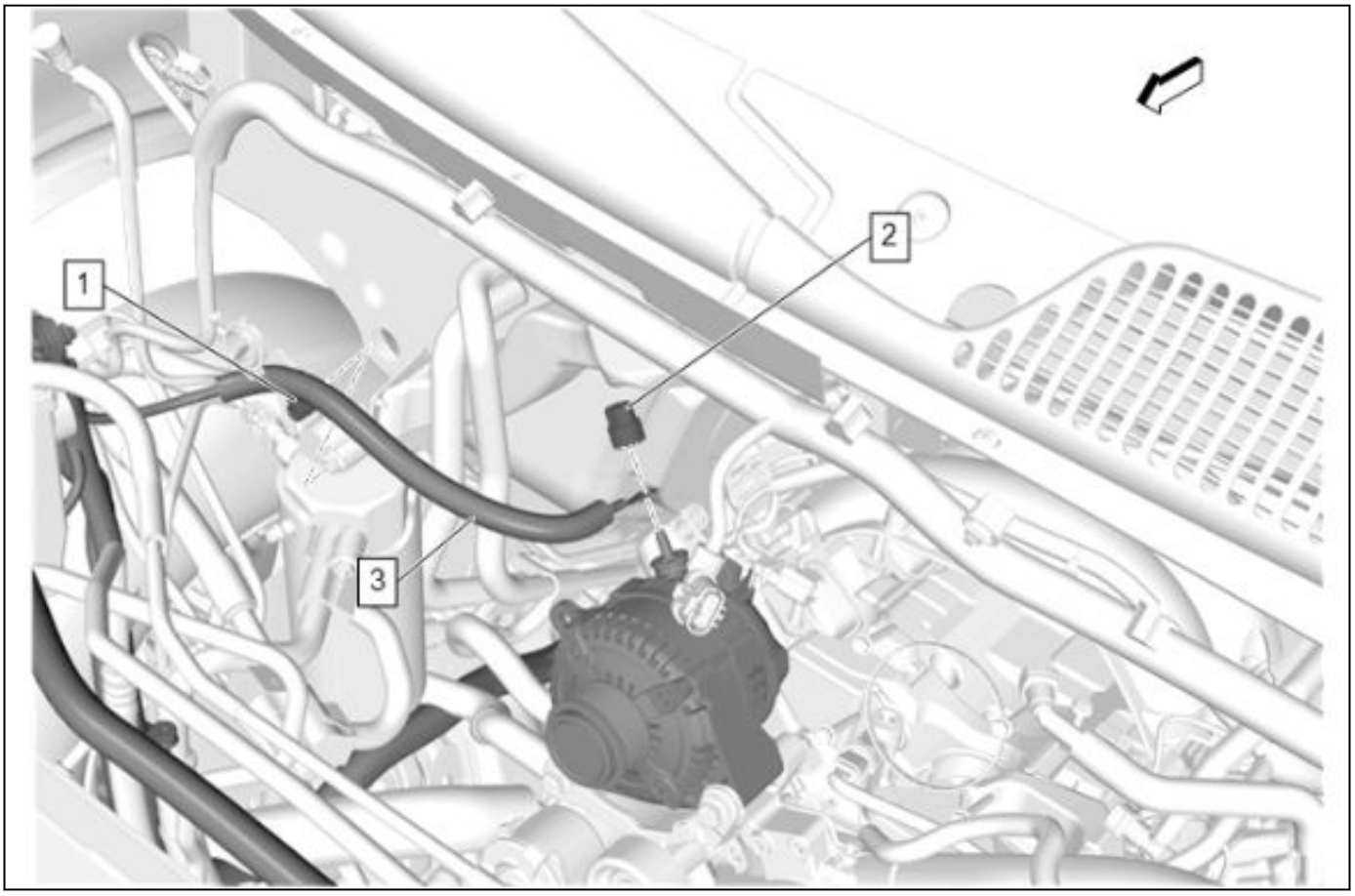

5662371

15. Battery Positive Cable Nut (2) » Remove
16. Battery Positive Cable (3) » Remove
17. Battery Positive Cable Retainer (1) » Disengage

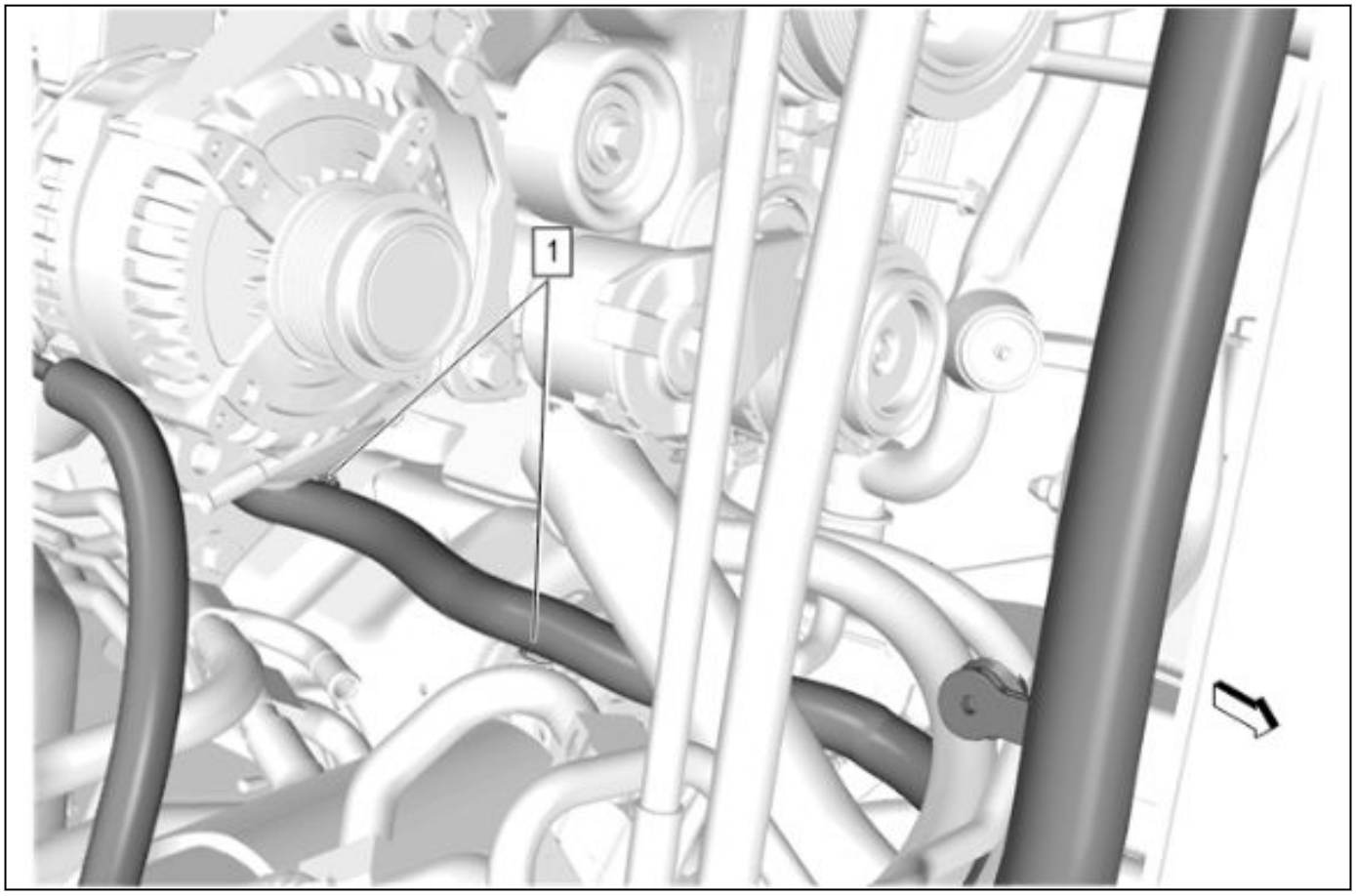

5662379

18. Battery Positive Cable Retainer (1) » Disengage[2x]
19. Raise and support the vehicle. [Link target (target-id 47852-) not found]

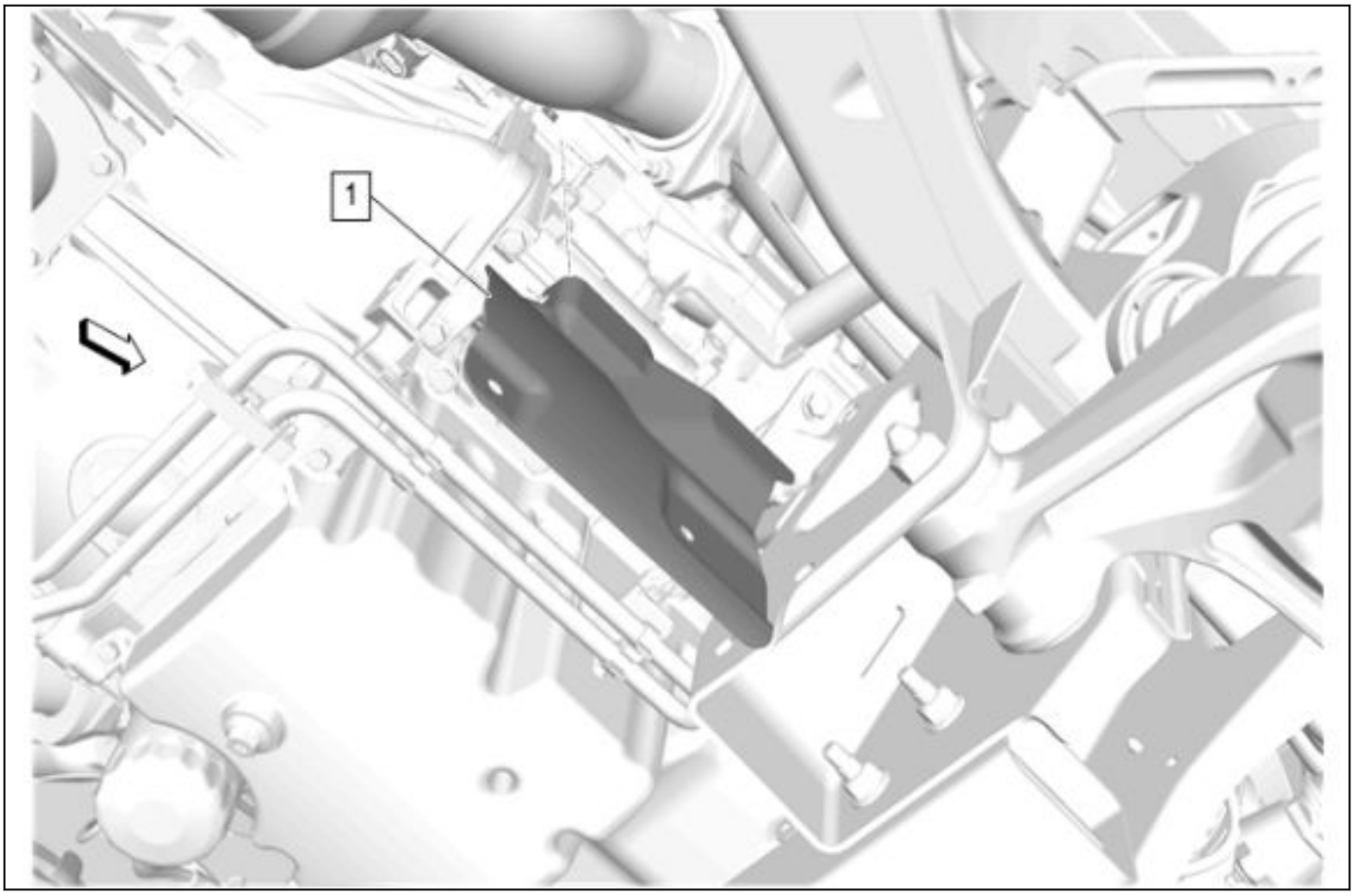

5661974

20. Starter Heat Shield (1) » Remove— *Starter Heat Shield Replacement 3-101*

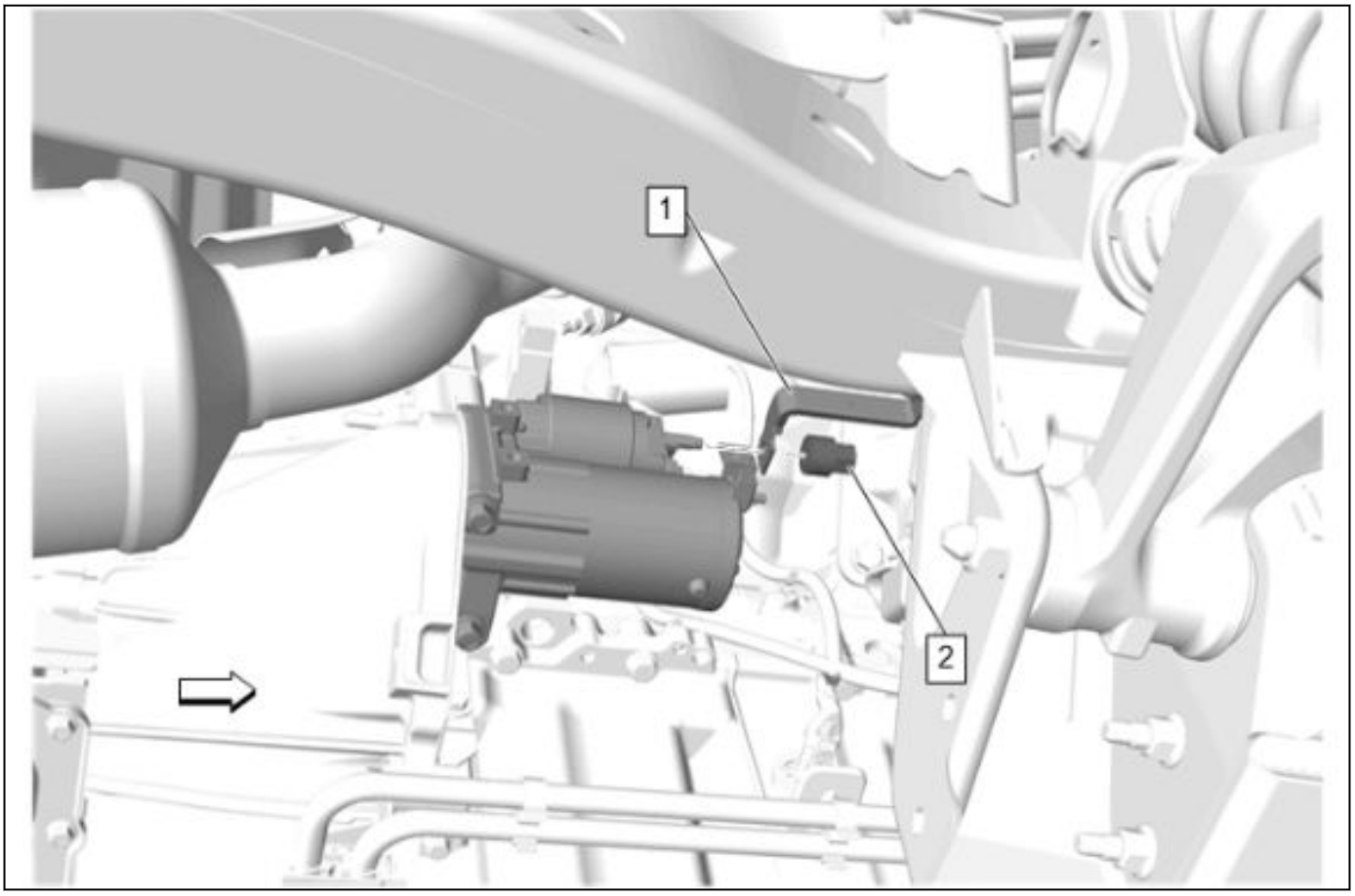

5661982

21. Battery Positive Cable Nut (2) @ Starter Solenoid » Remove
22. Battery Positive Cable (1) » Remove
23. Lower the vehicle.

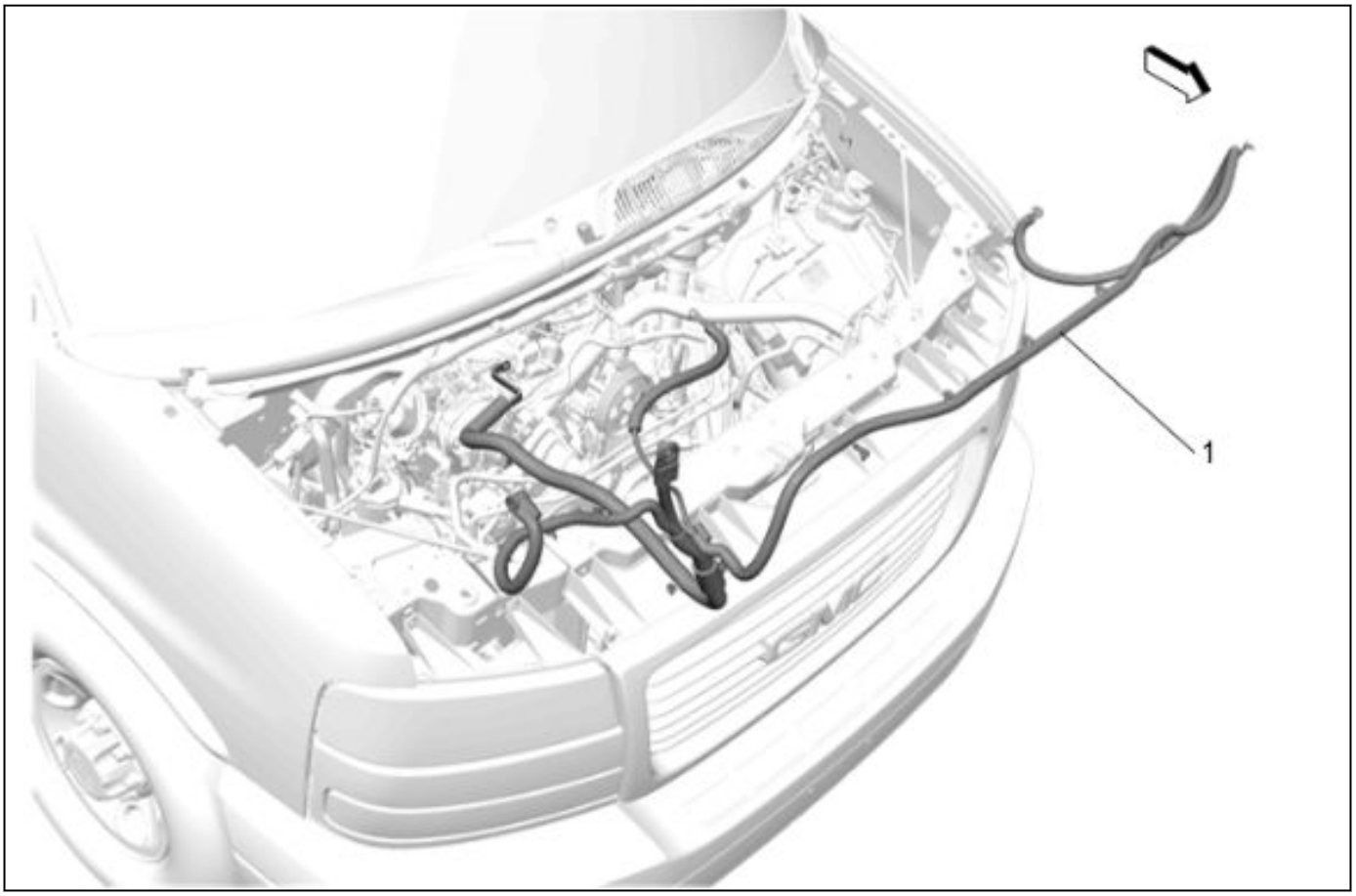

5662405

24. Battery Positive Cable (1) » Remove

Installation Procedure

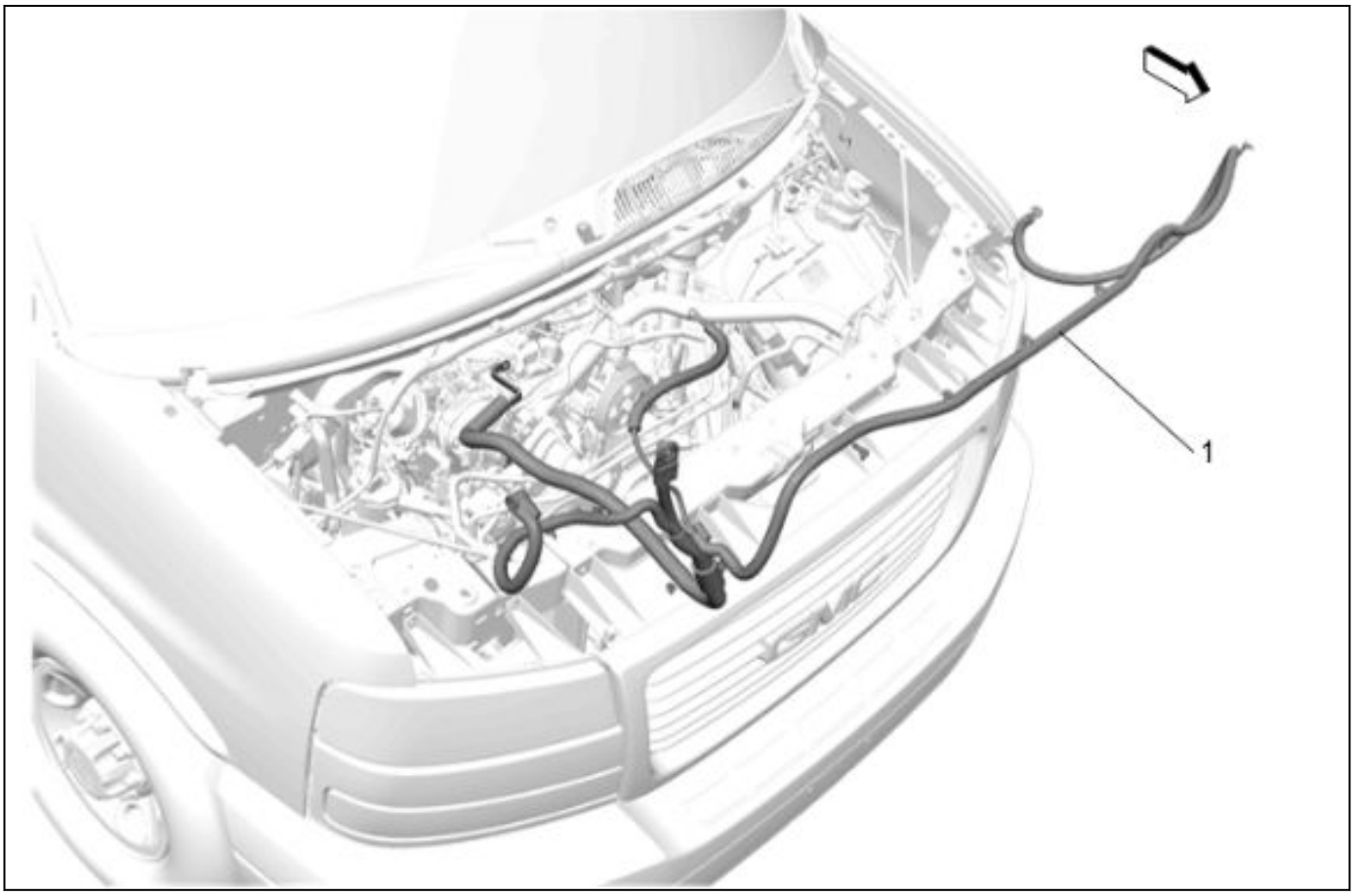

5662405

1. Battery Positive Cable (1) » Install
2. Raise and support the vehicle. [Link target (target-id 47852-) not found]

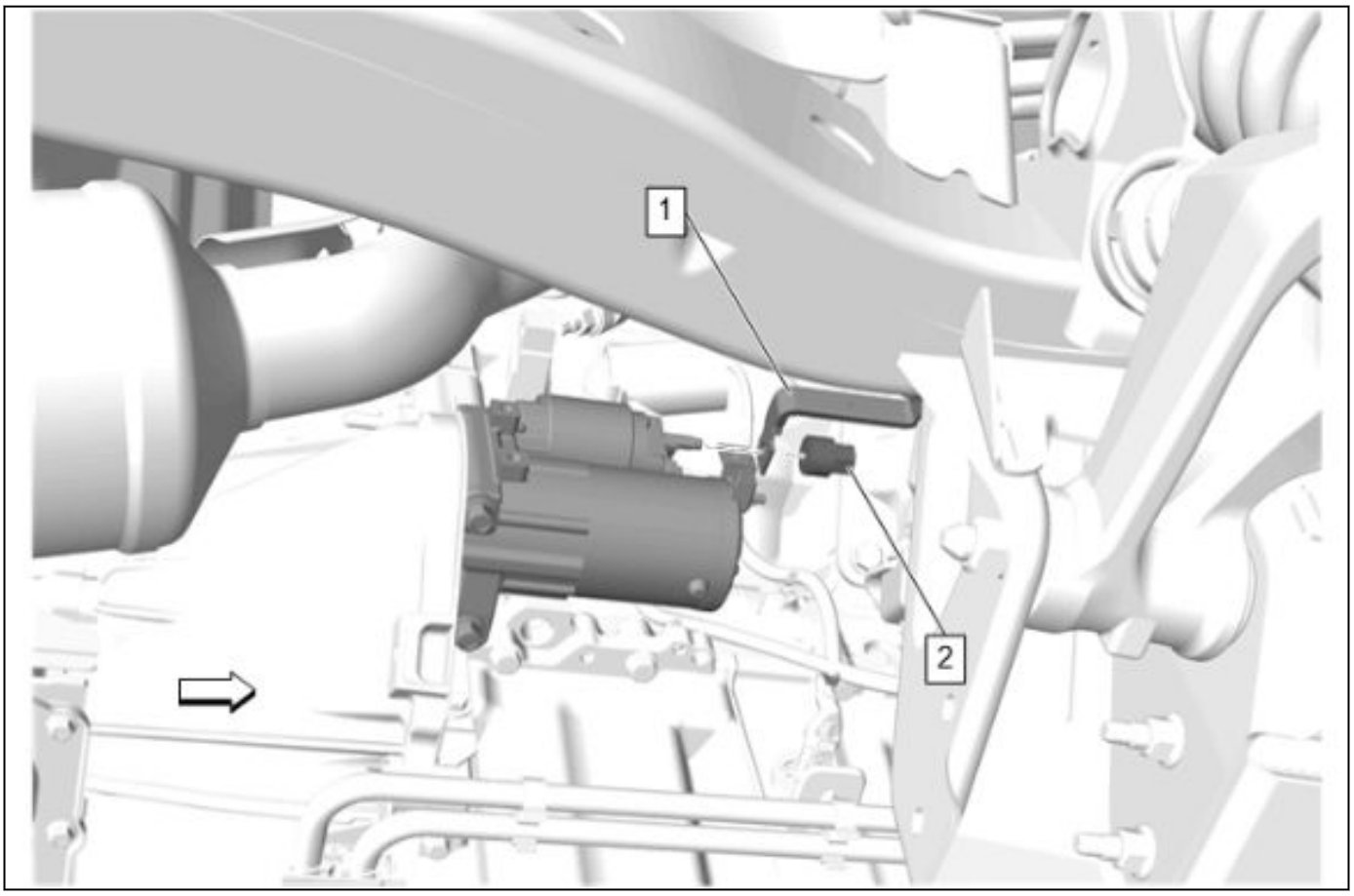

5661982

3. Battery Positive Cable (1) » Install
4. Battery Positive Cable Nut (2) @ Starter Solenoid » Install— *Starter Replacement 3-90*
Starter Replacement 3-92

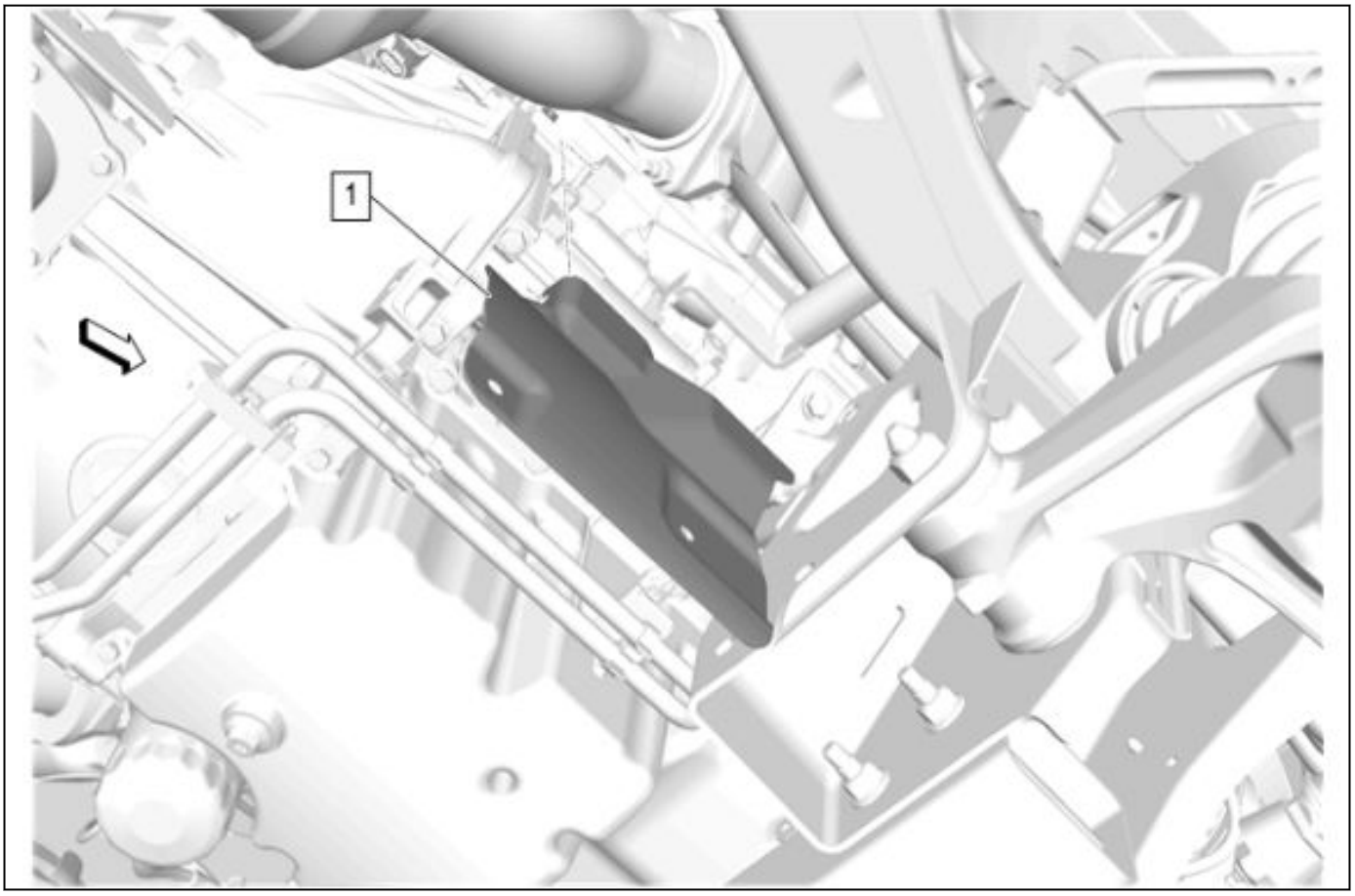

5661974

5. Starter Heat Shield (1) » Install— *Starter Heat Shield Replacement 3-101*
6. Lower the vehicle.

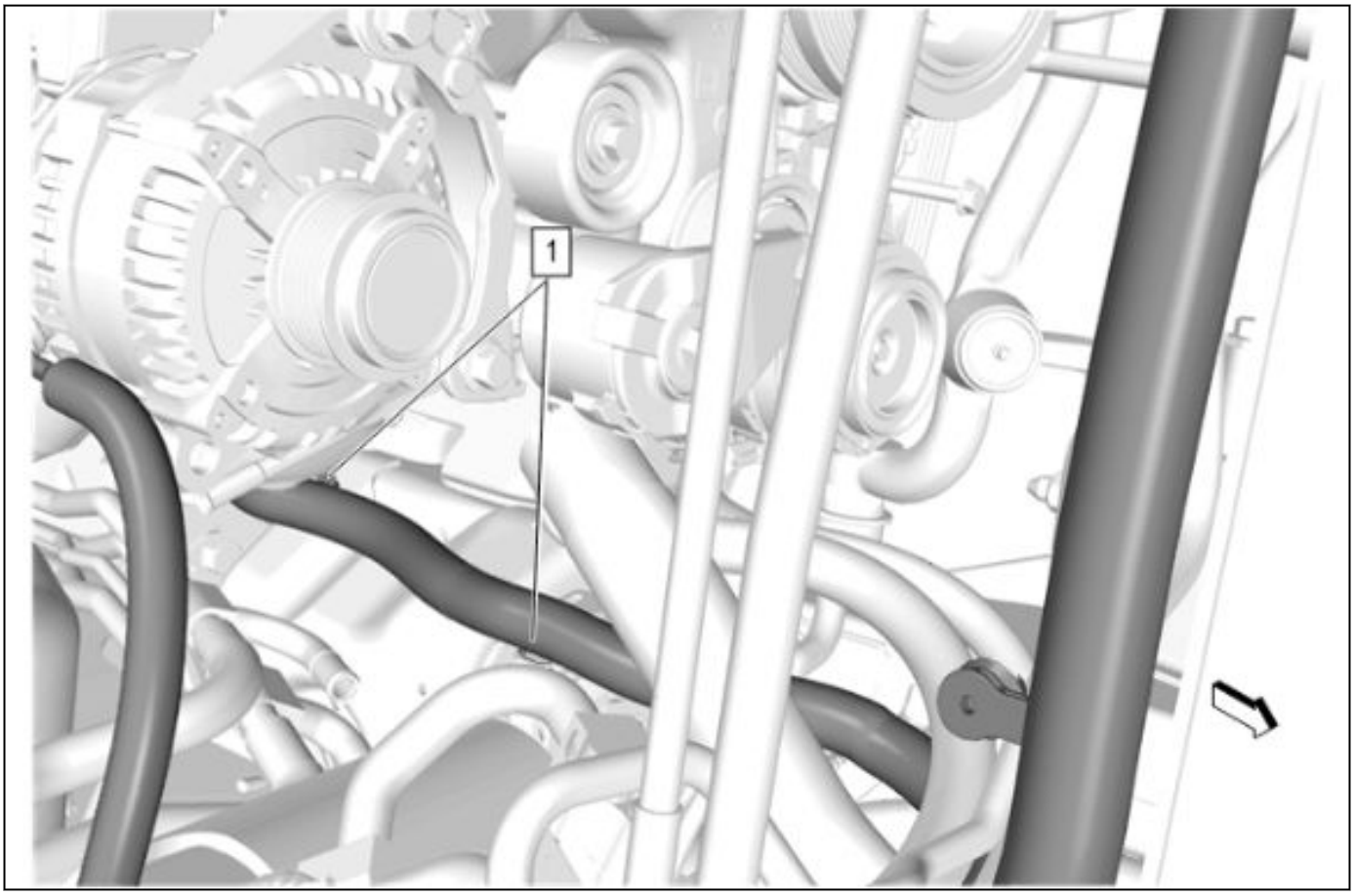

5662379

7. Battery Positive Cable Retainer (1) » Engage[2x]

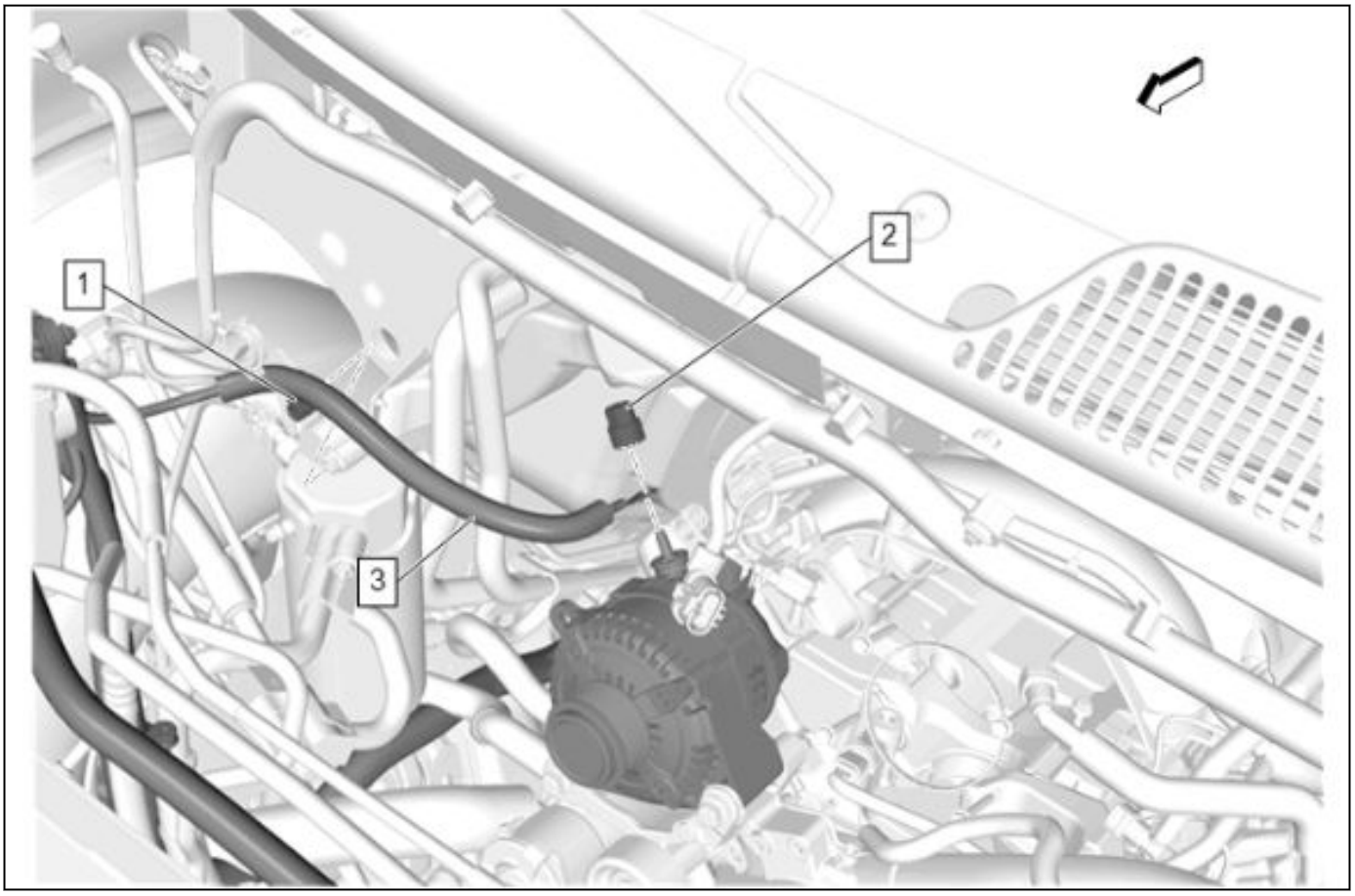

5662371

8. Battery Positive Cable (3) » Install
9. Battery Positive Cable Nut (2) » Install— *Generator Replacement 3-104* *Generator Replacement 3-109*
10. Battery Positive Cable Retainer (1) » Engage

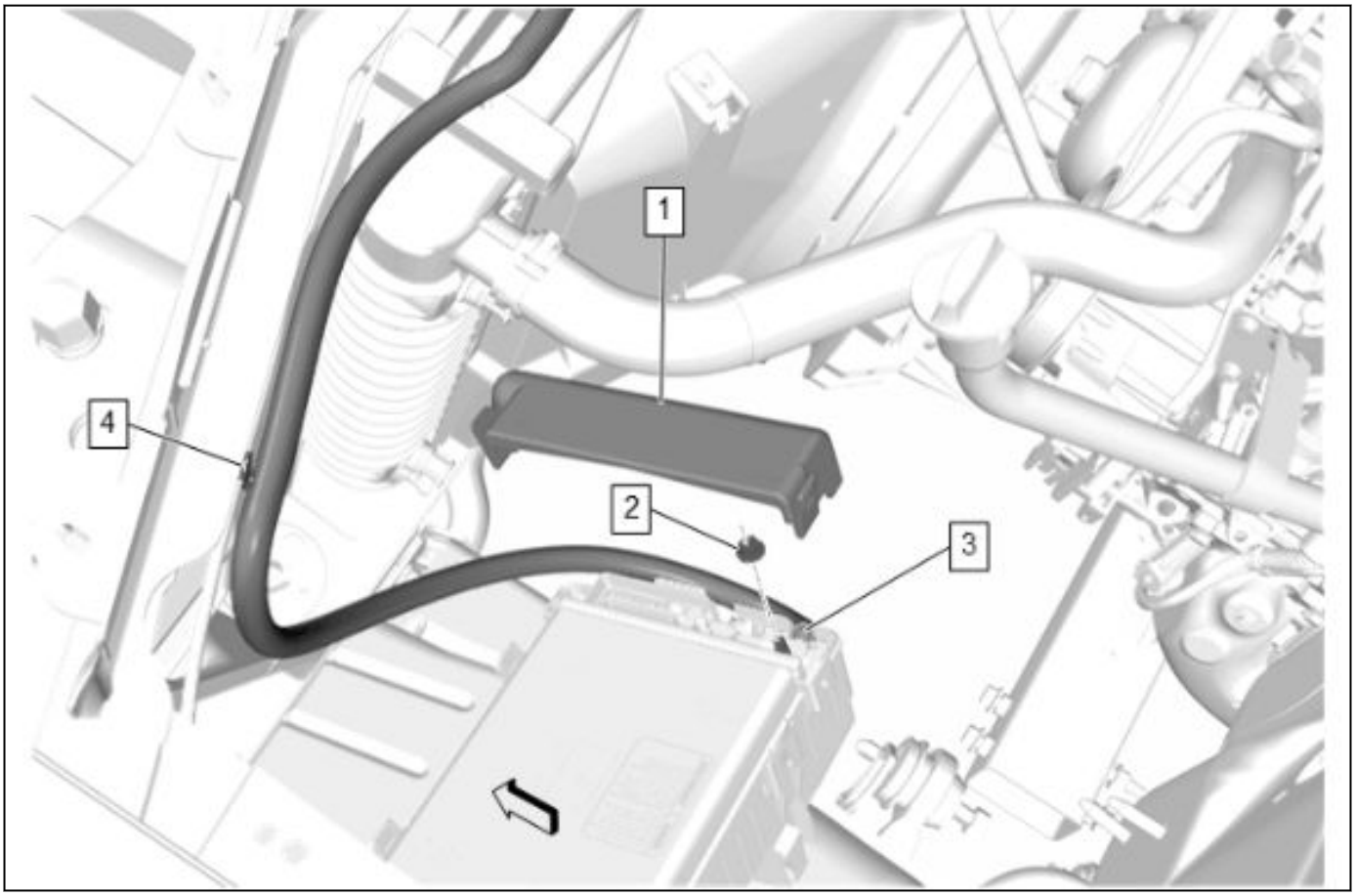

5694639

11. Battery Positive Cable (3) » Install

Caution: Refer to [Link target (target-id 178169-) not found]

12. Battery Positive Cable Nut (2) » Install and tighten**10** N•m **(89 lb in)**
13. Accessory Wiring Junction Block Cover (1) » Install

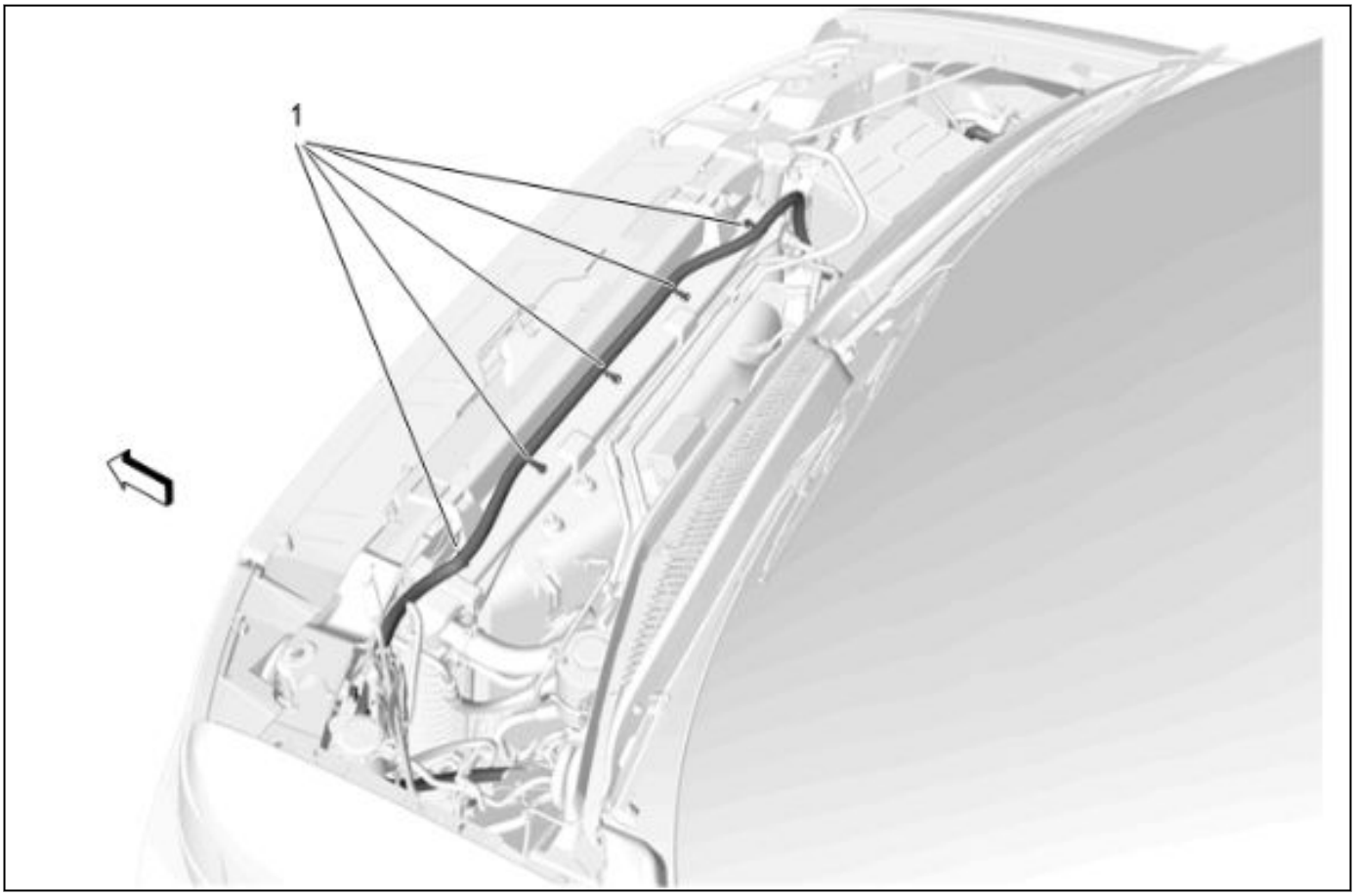

5662352

14. Battery Positive Cable Retainer (1) » Engage[5x]

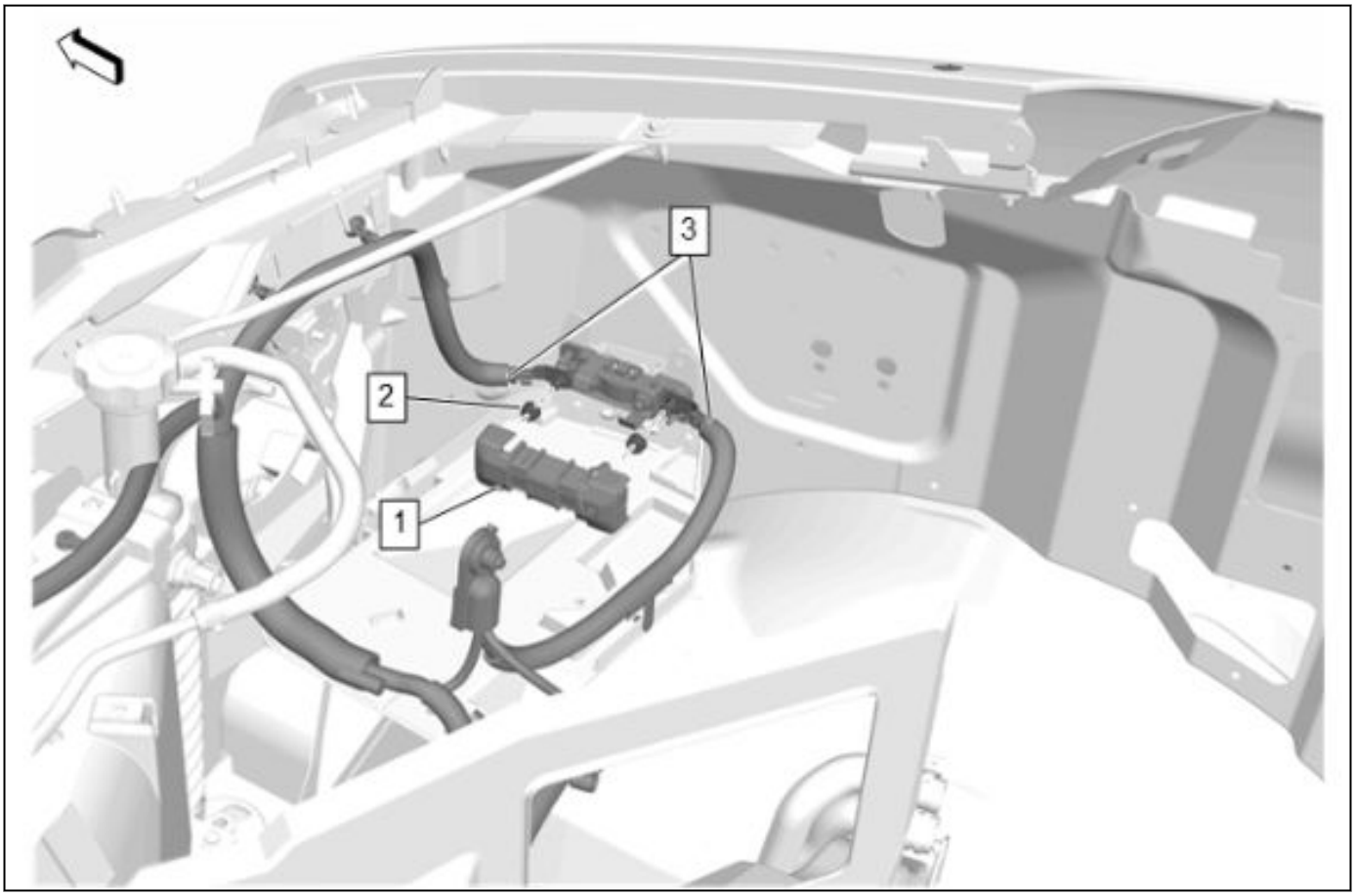

5694205

15. Battery Positive Cable (3) » Install[2x]
16. Front Compartment Fuse Block Cable Nut (2) » Install[2x] — *Front Compartment Fuse Block Replacement (L8T) 5-546*
17. Front Compartment Fuse Block Cover(1) » Install

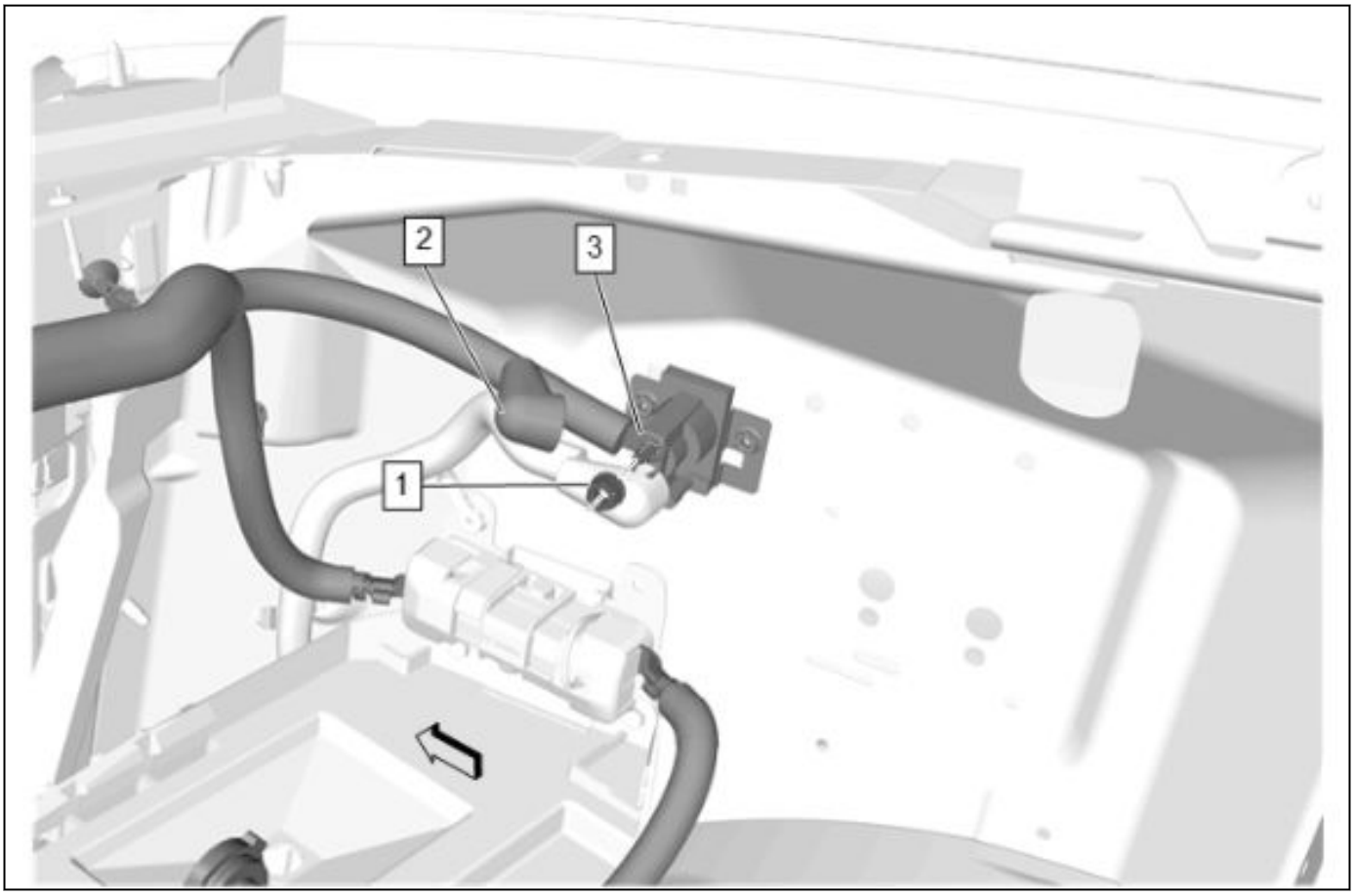

5694708

18. Battery Positive Cable (3) »
19. Battery Positive Cable Nut (1) » Install and tighten**7.5** N•m **(66 lb in)**
20. Install the protective sleeve (2).

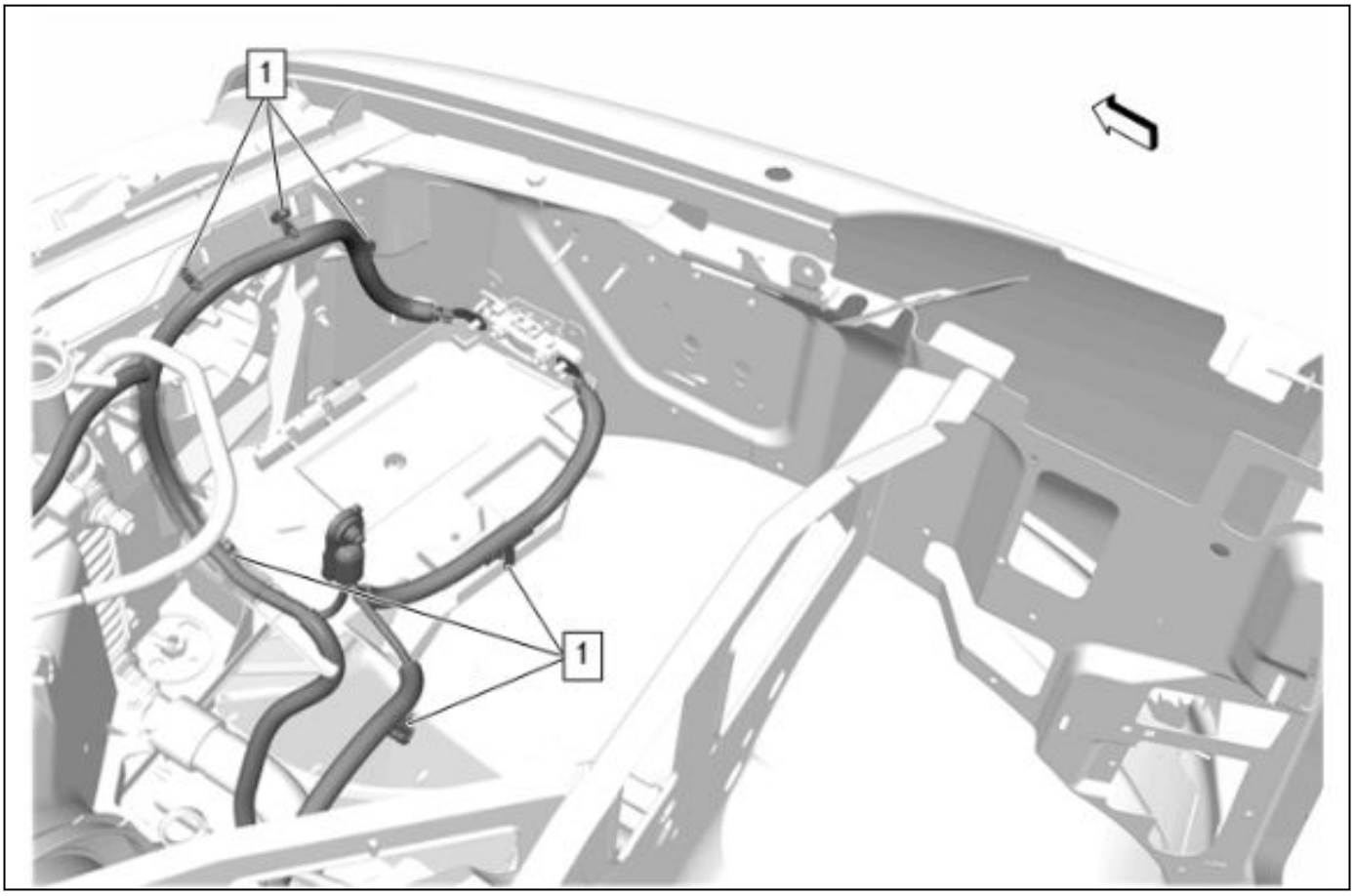

5694656

21. Retainer (1) » Install[6x]

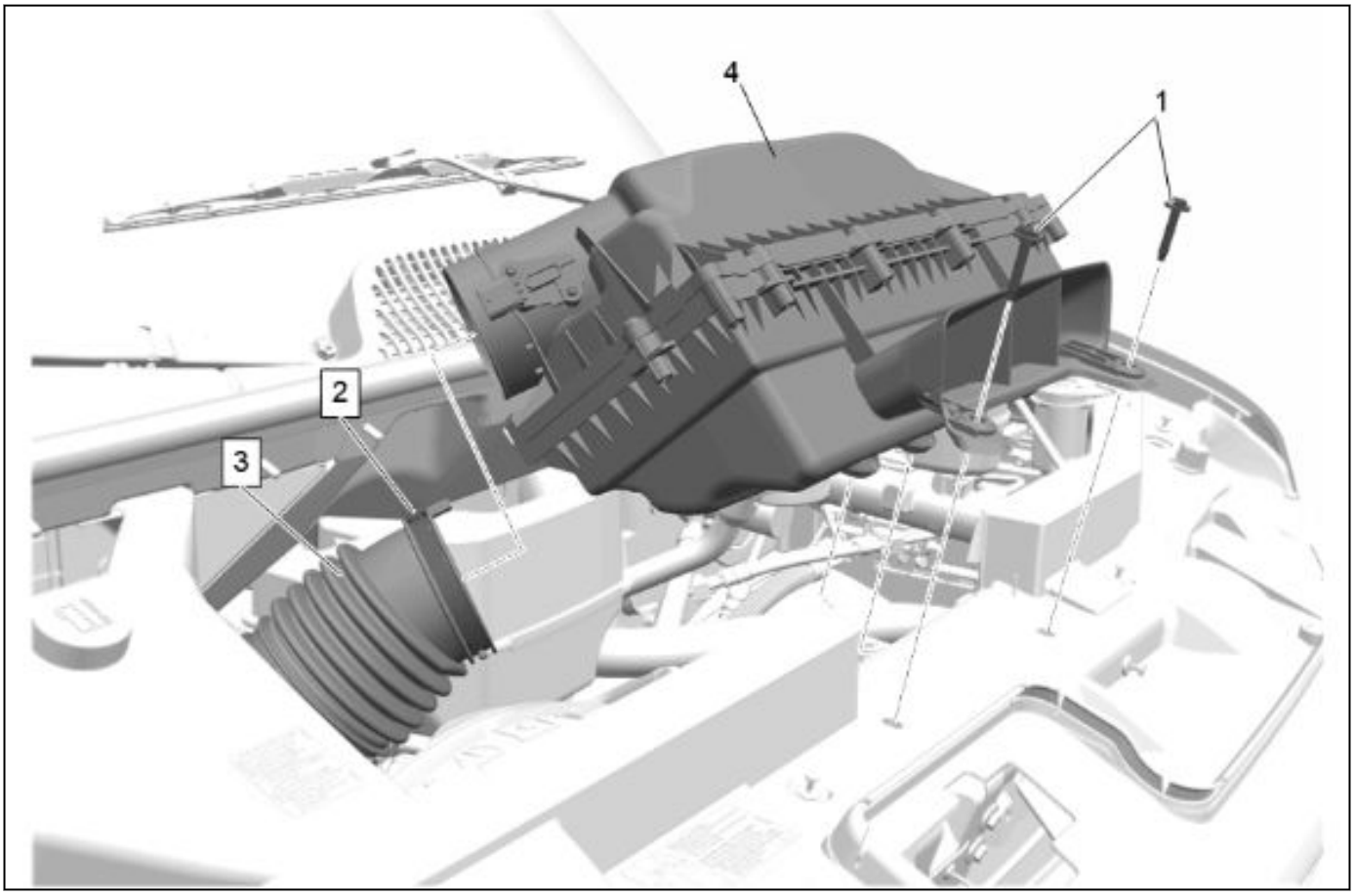

5659969

22. Air Cleaner Assembly (4) » Install— [Link target (target-id 227726-) not found]

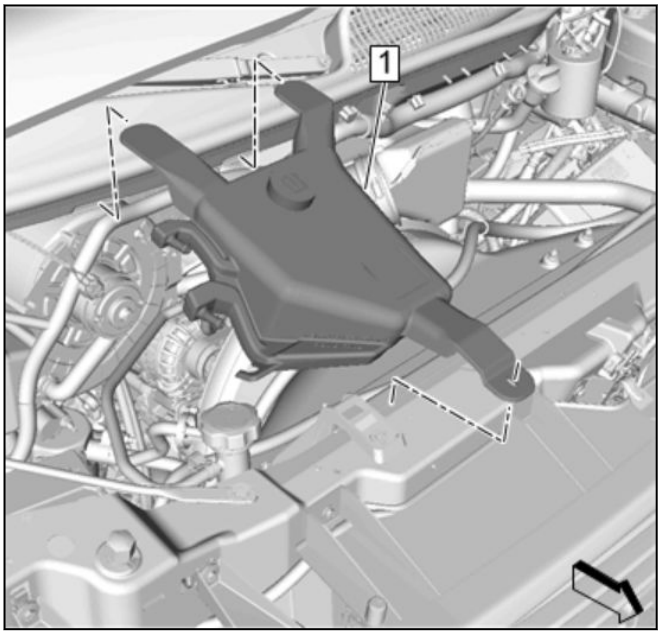

4840951

23. Coolant Recovery Reservoir (1) » Install— [Link target (target-id 37161-) not found]

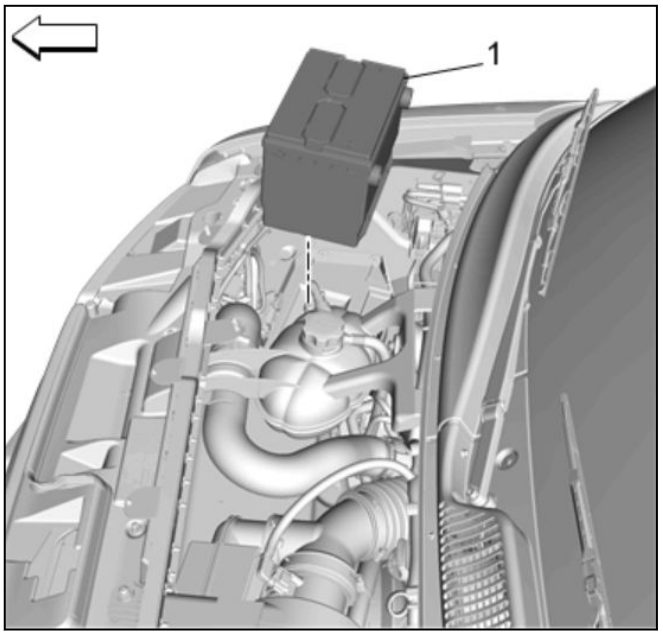

4597853

24. Install the battery. *Battery Replacement 3-85*
25. Connect the battery negative cable. *Battery Negative Cable Disconnection and Connection 3-8* *Battery Negative Cable Disconnection and Connection 3-9*

Battery Positive Cable Replacement

Removal Procedure

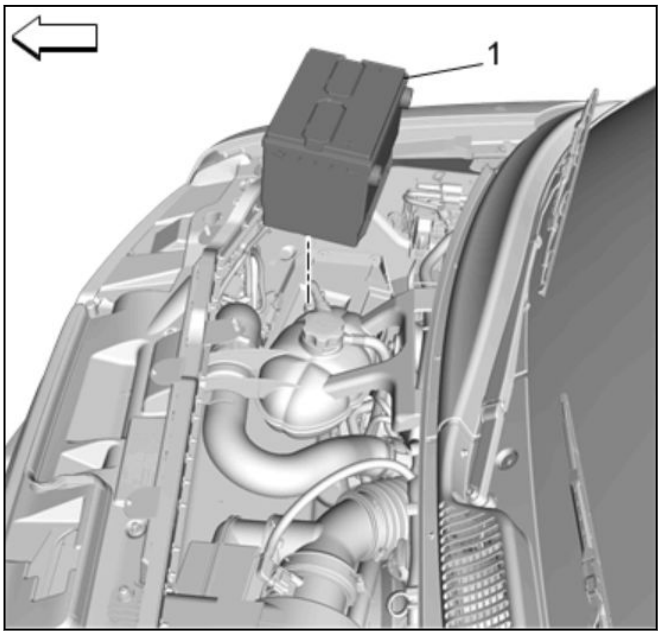

4597853

1. Remove the battery. *Battery Replacement 3-85*

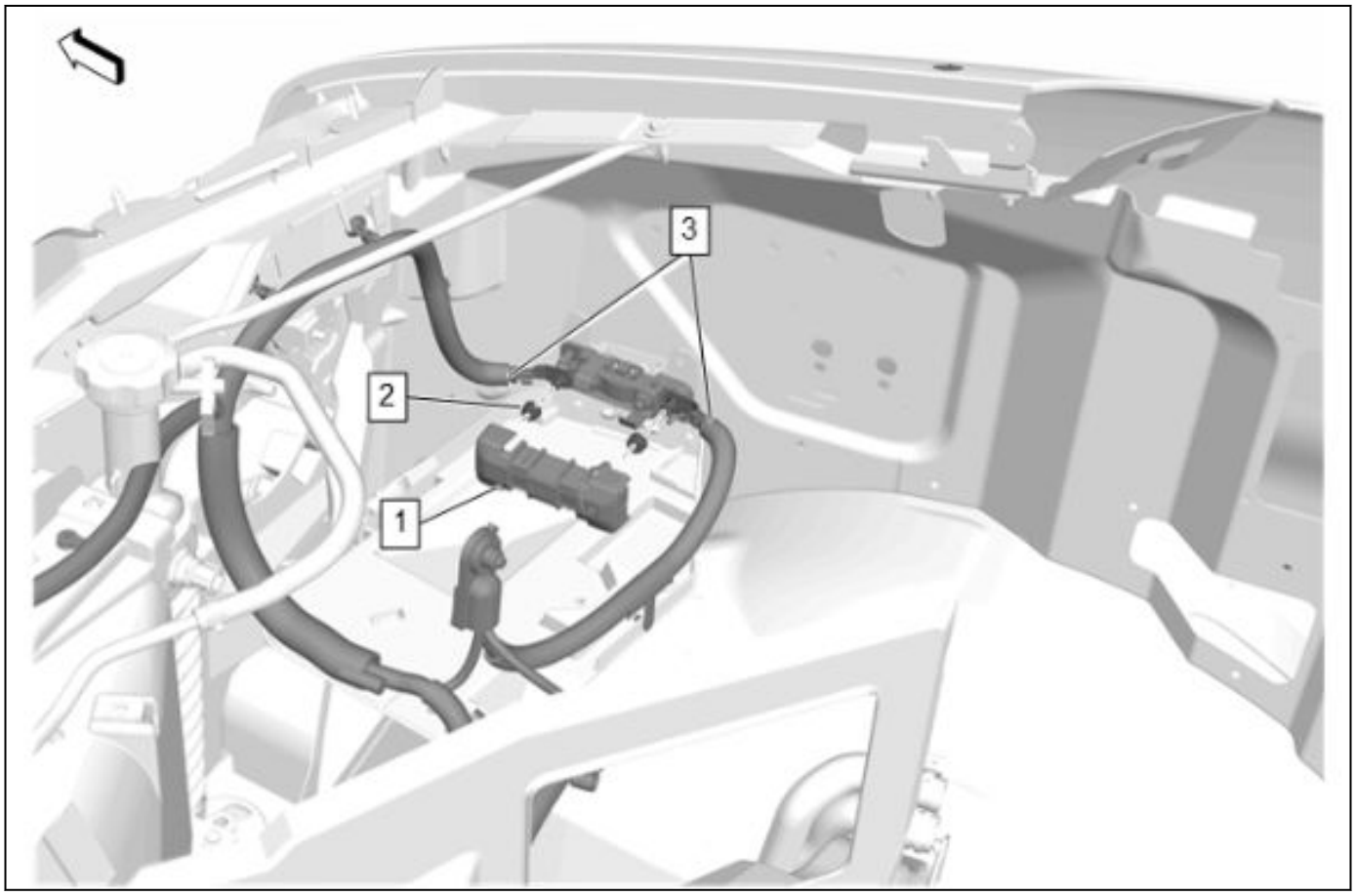

5694205

2. Front Compartment Fuse Block Cover(1) » Remove
3. Front Compartment Fuse Block Cable Nut (2) » Remove[2x]
4. Battery Positive Cable (3) » Remove[2x]

5694656

5. Retainer (1) » Remove[6x]

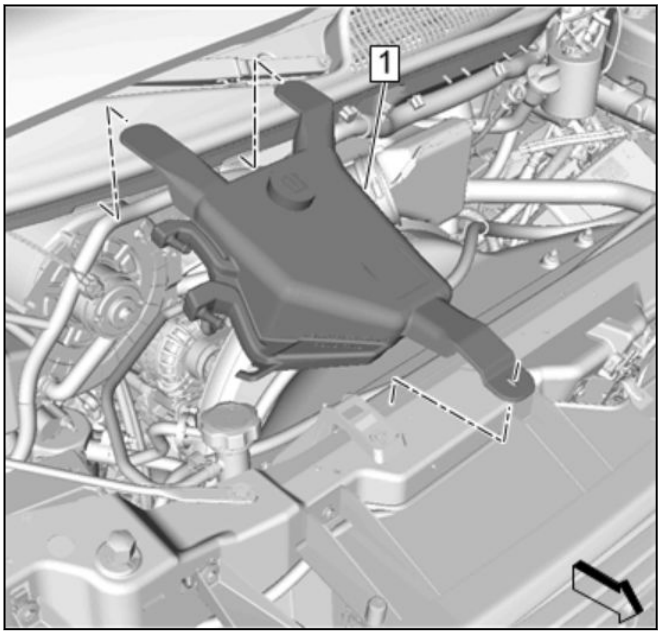

4840951

6. Coolant Recovery Reservoir (1) » Reposition—[Link target (target-id 37161-) not found]

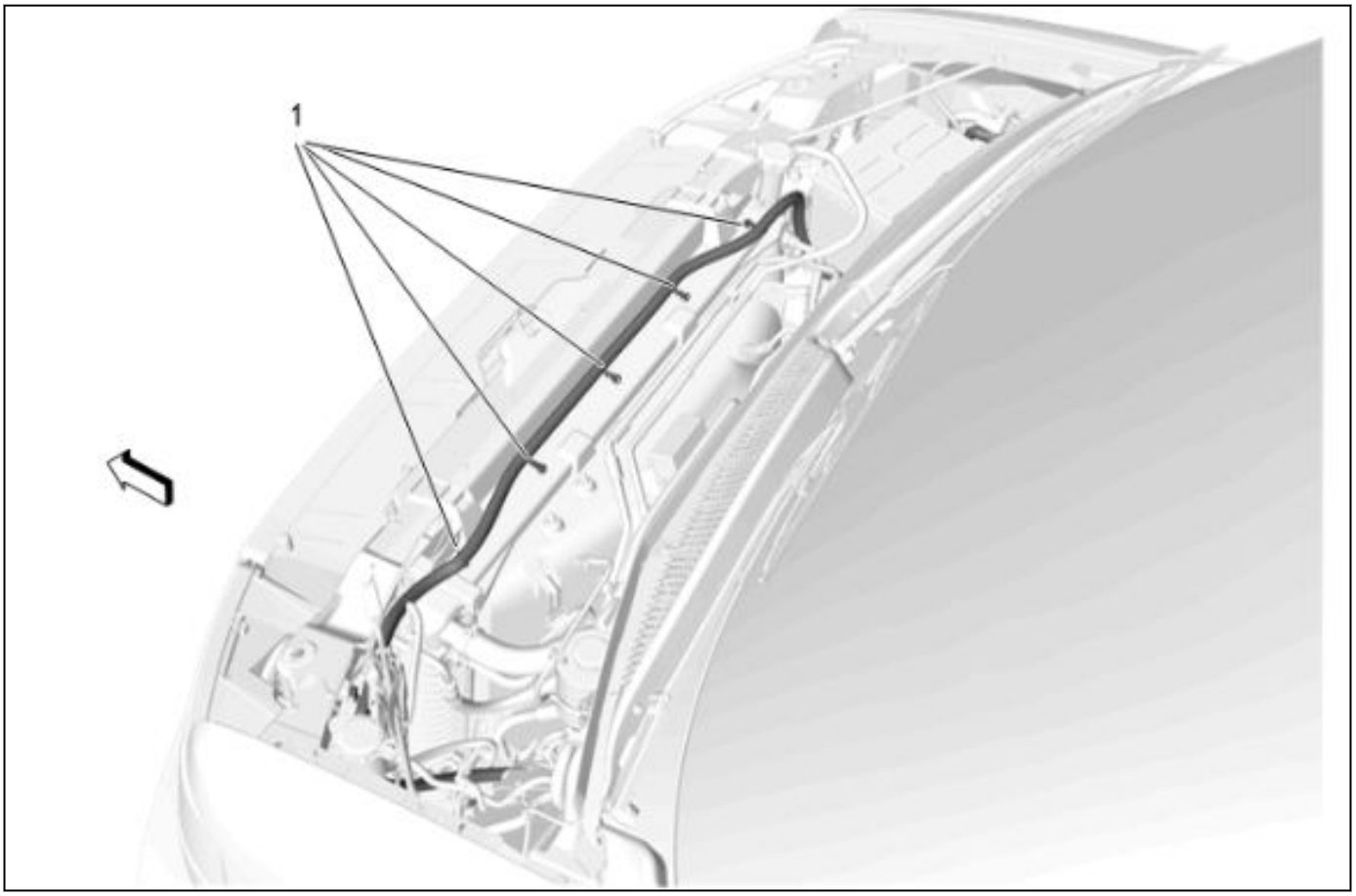

5662352

7. Battery Positive Cable Retainer (1) »
   Disengage[5x]

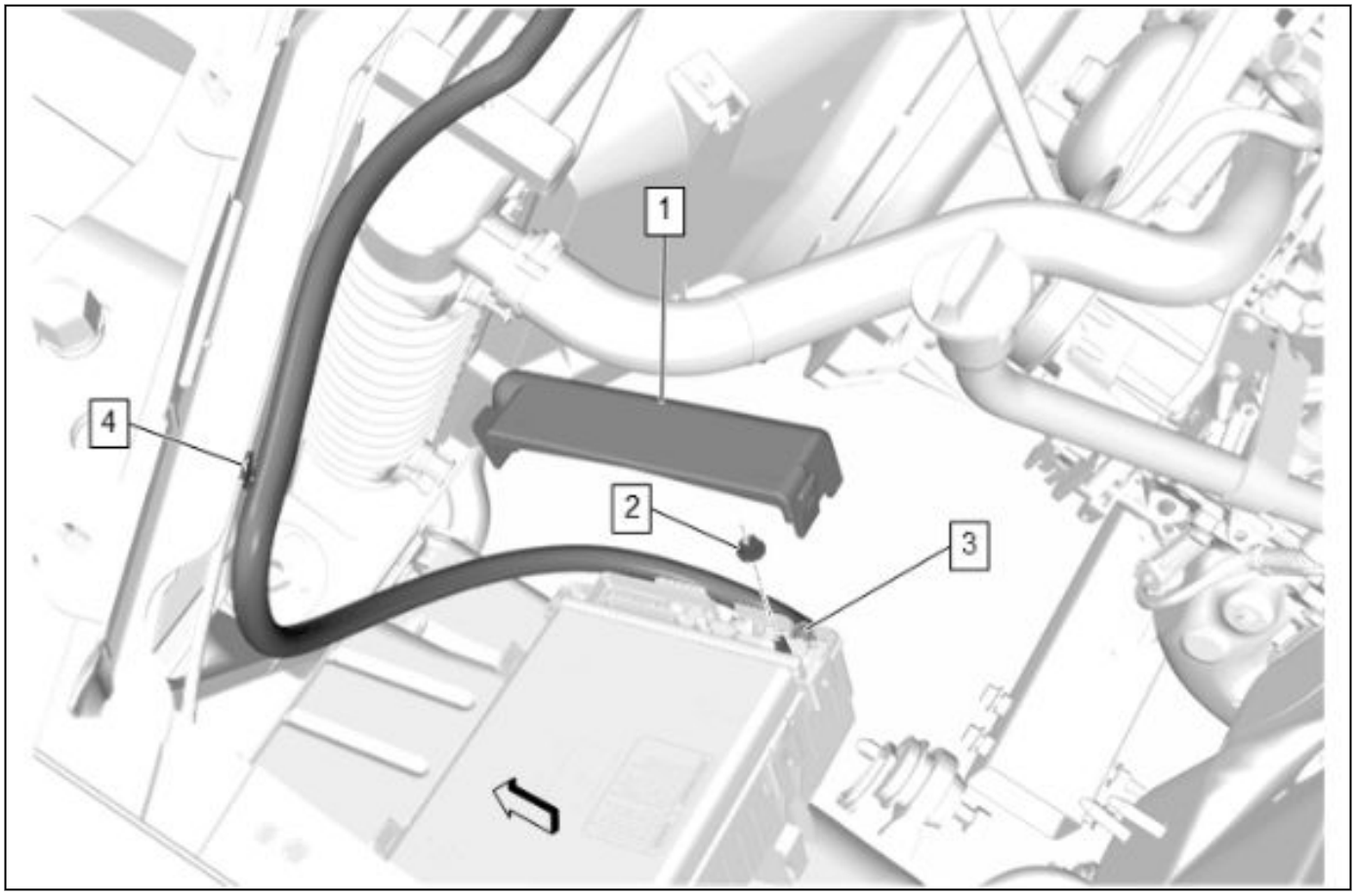

5694639

8. Disconnect the wiring harness retainers as necessary. (4)
9. Accessory Wiring Junction Block Cover (1) » Remove
10. Battery Positive Cable Nut (2) » Remove
11. Battery Positive Cable (3) » Remove

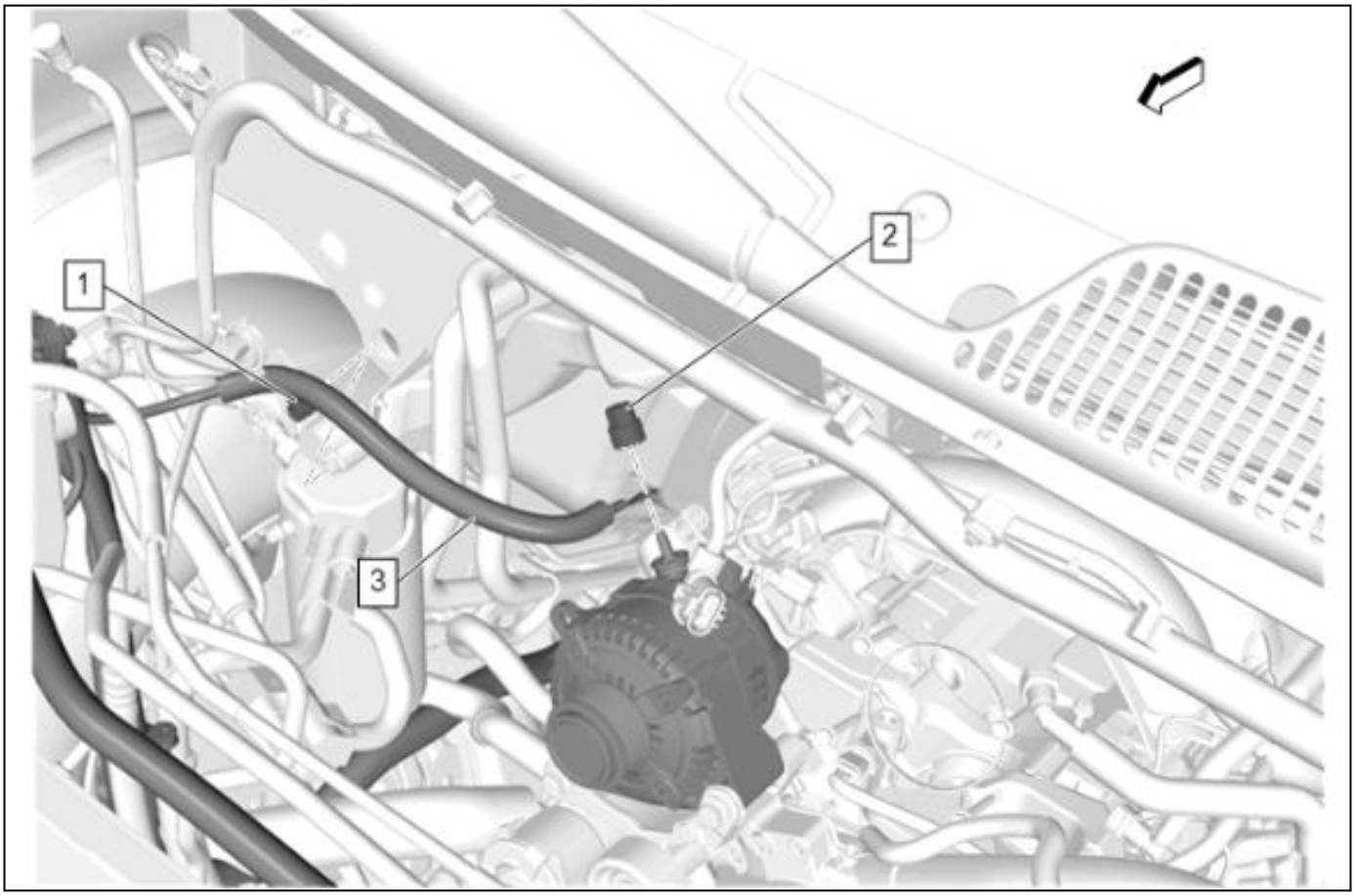

5662371

12. Battery Positive Cable Nut (2) » Remove
13. Battery Positive Cable (3) » Remove
14. Raise and support the vehicle. [Link target (target-id 47852-) not found]

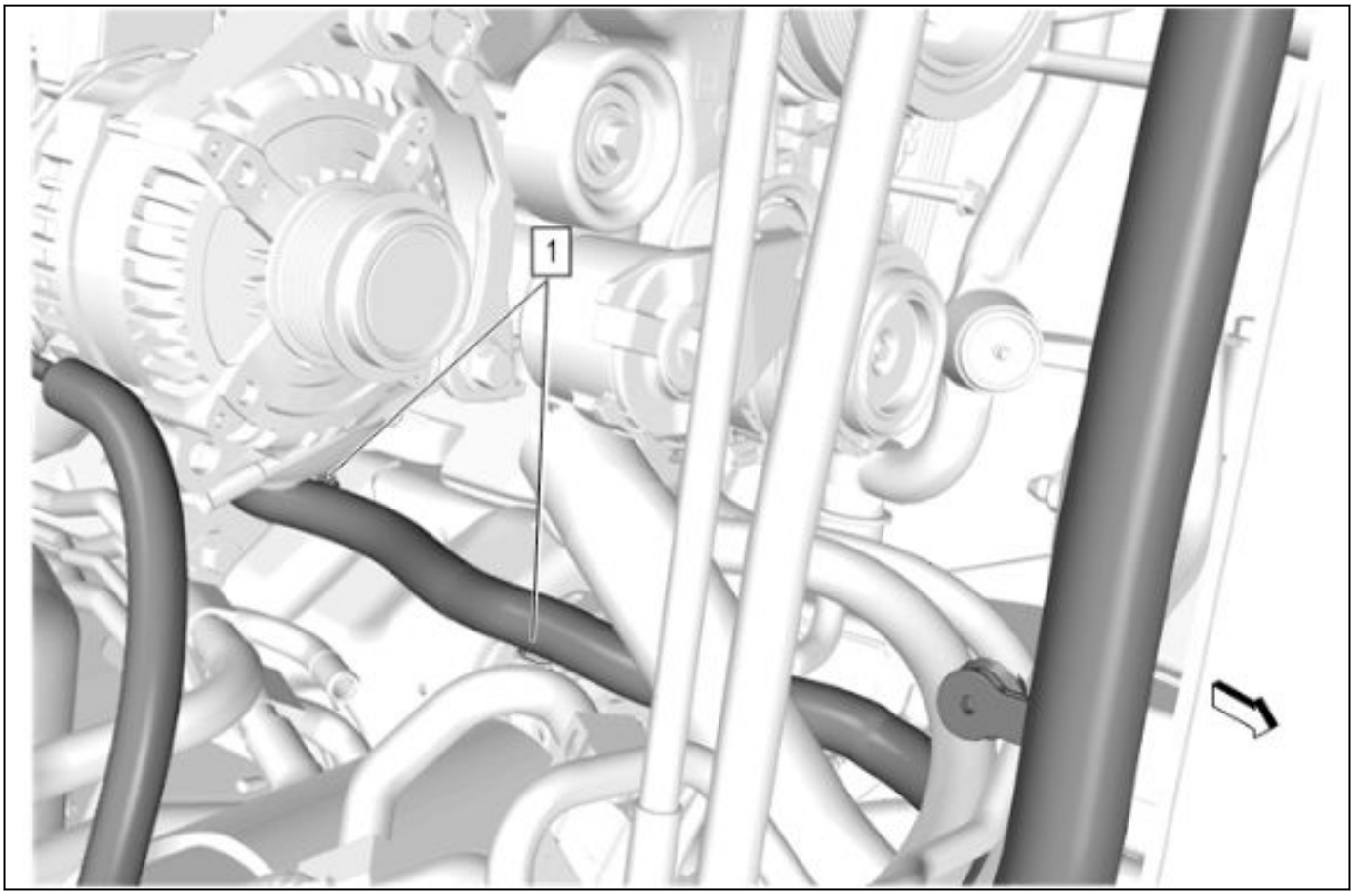

5662379

15. Disconnect the wiring harness retainers as necessary. (1)

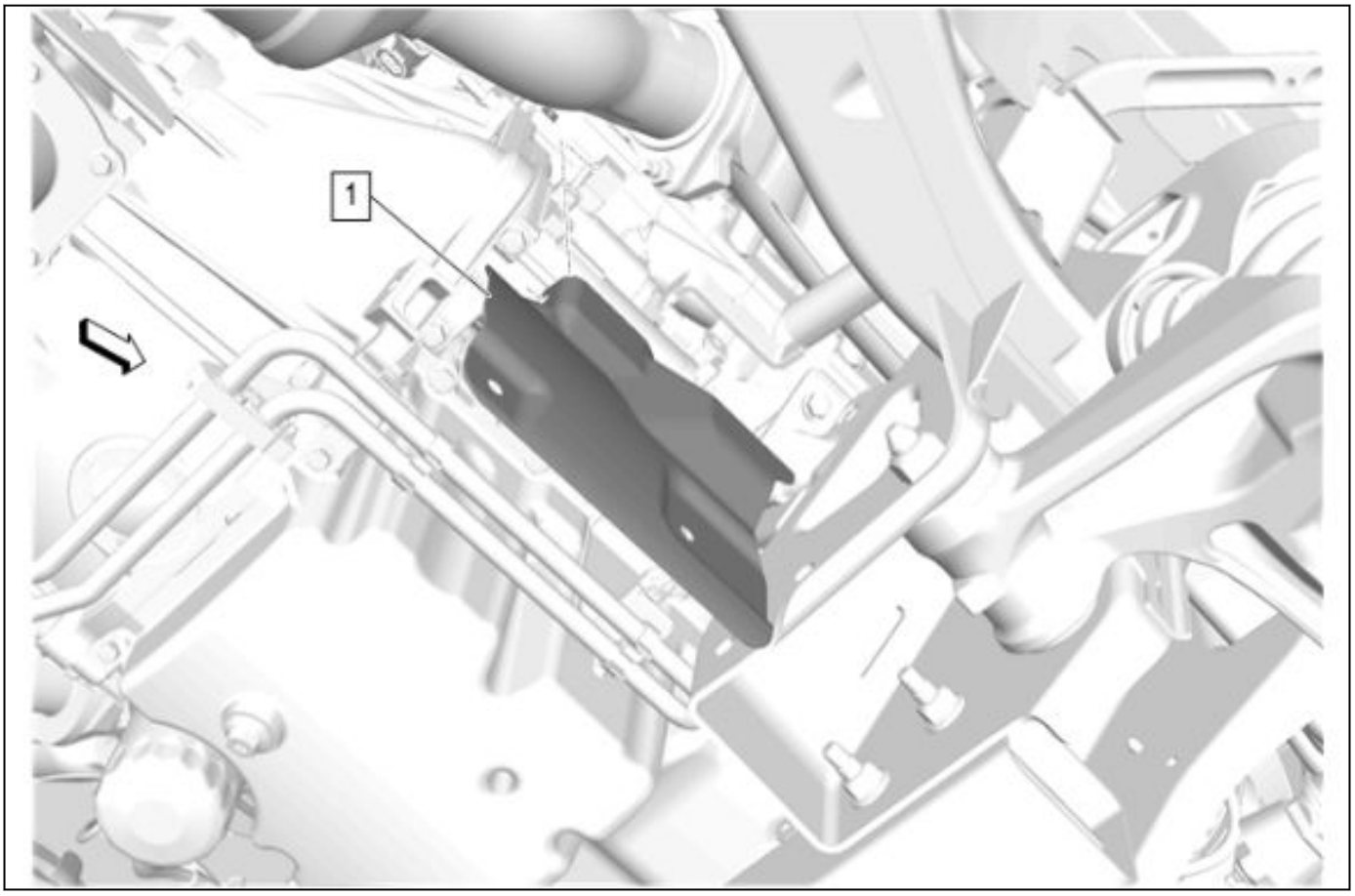

5661974

16. Starter Heat Shield (1) » Remove— *Starter Heat Shield Replacement 3-101*

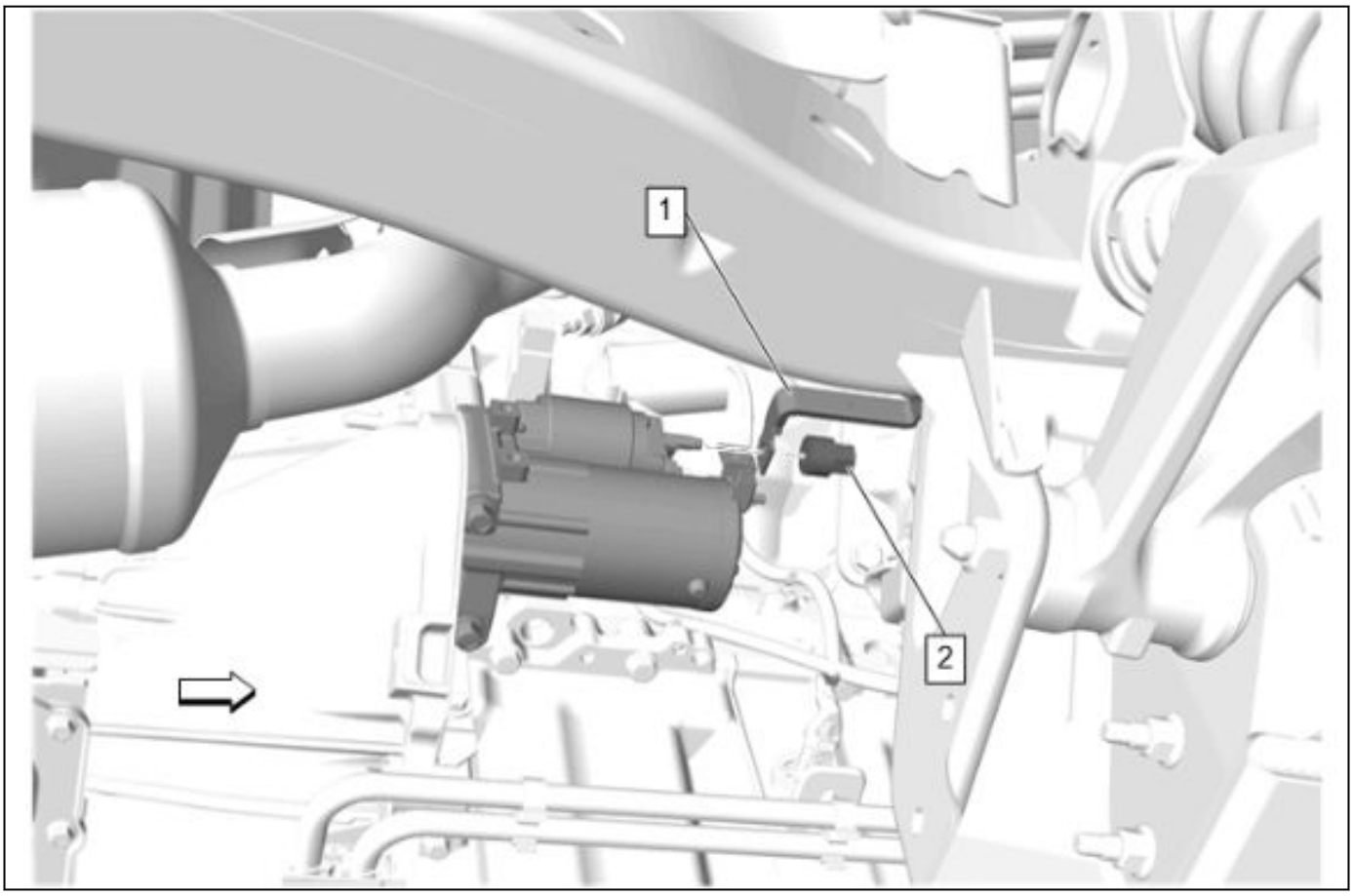

5661982

17. Battery Positive Cable Nut (2) @ Starter Solenoid » Remove
18. Battery Positive Cable (1) » Remove
19. Lower the vehicle.

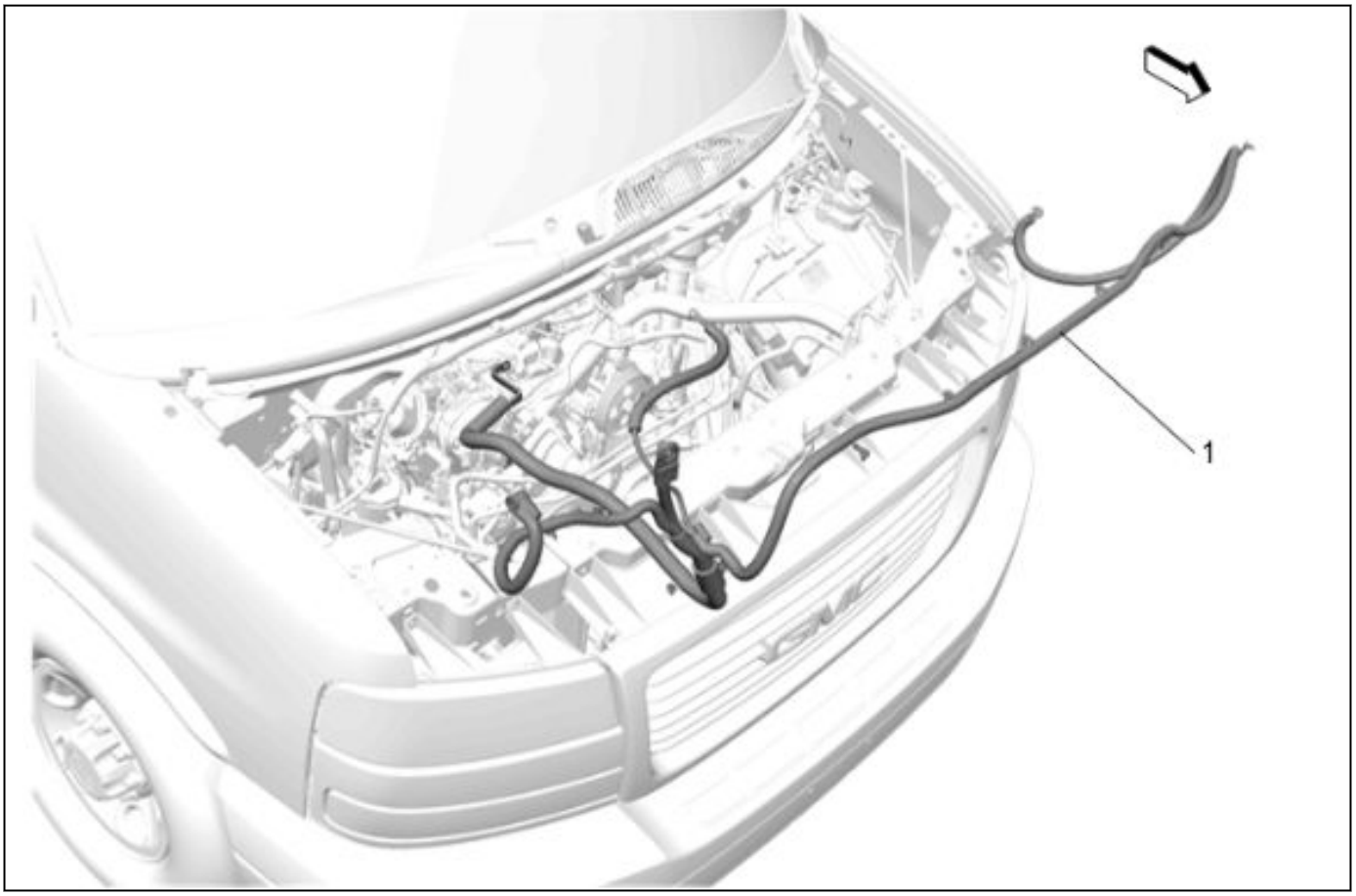

5662405

20. Battery Positive Cable (1) » Remove

Installation Procedure

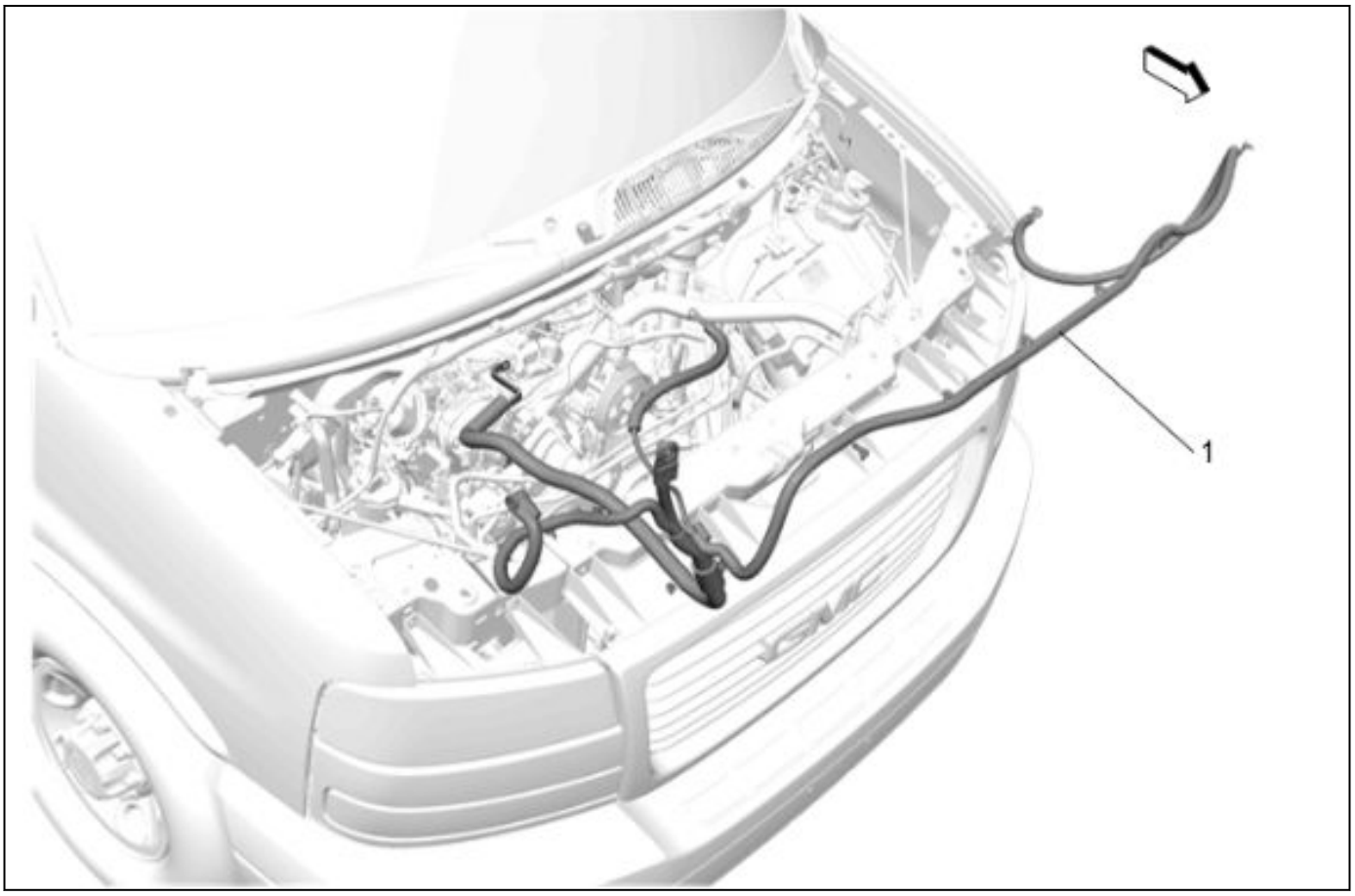

5662405

1. Battery Positive Cable (1) » Install
2. Raise and support the vehicle. [Link target (target-id 47852-) not found]

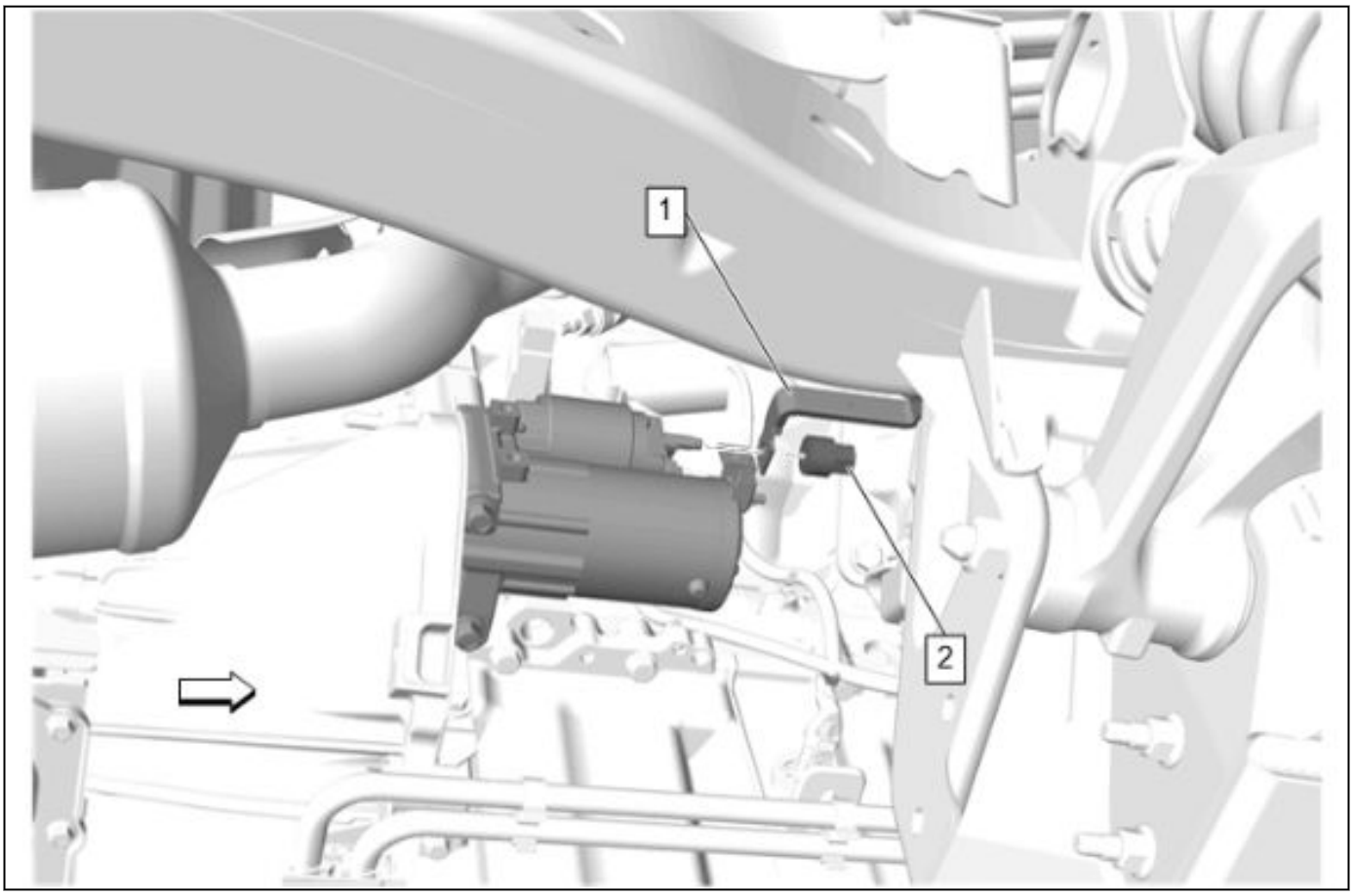

5661982

3. Battery Positive Cable (1) » Install
4. Battery Positive Cable Nut (2) @ Starter Solenoid » Install— *Starter Replacement 3-90*
Starter Replacement 3-92

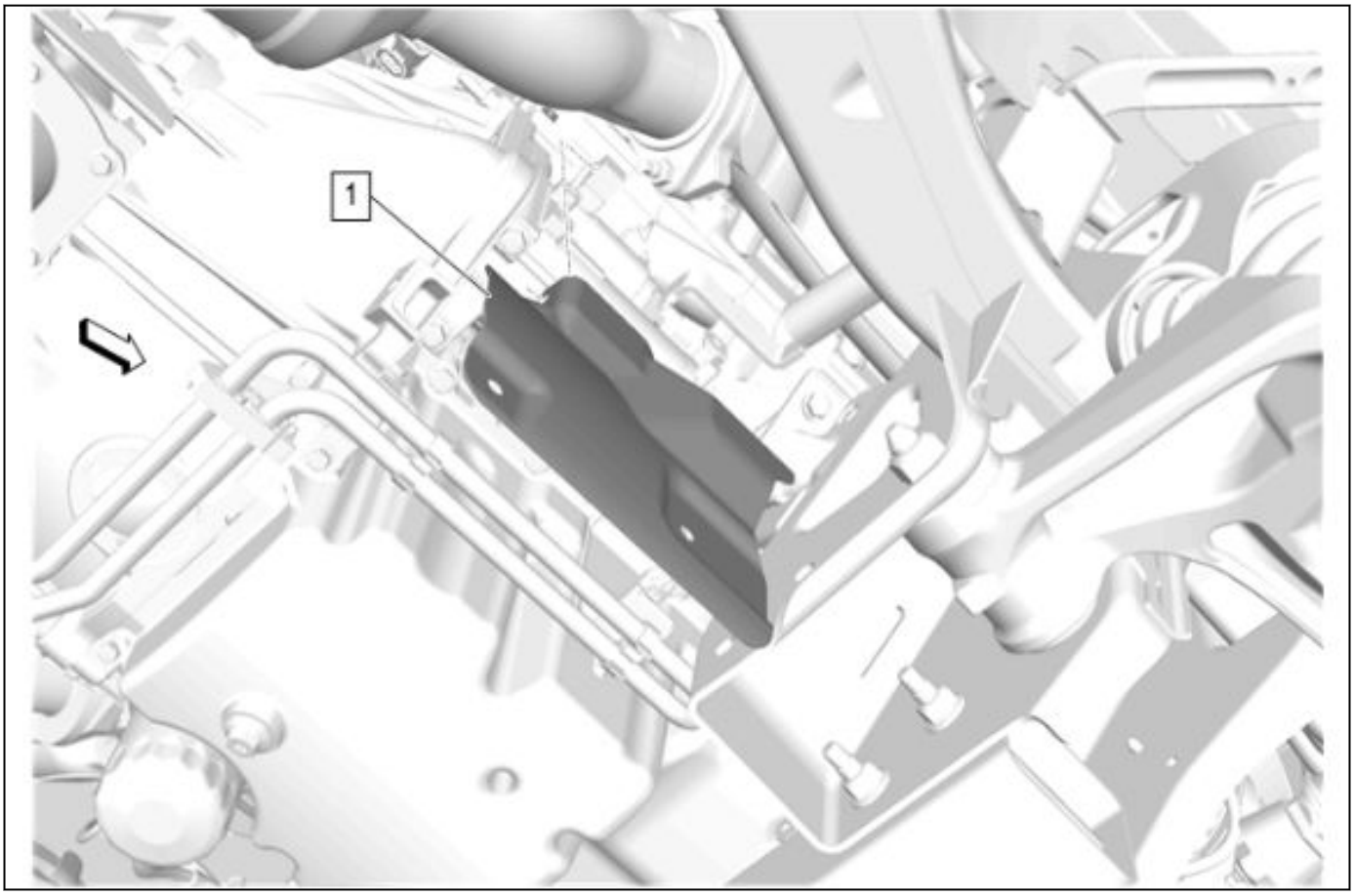

5661974

5. Starter Heat Shield (1) » Install— *Starter Heat Shield Replacement 3-101*

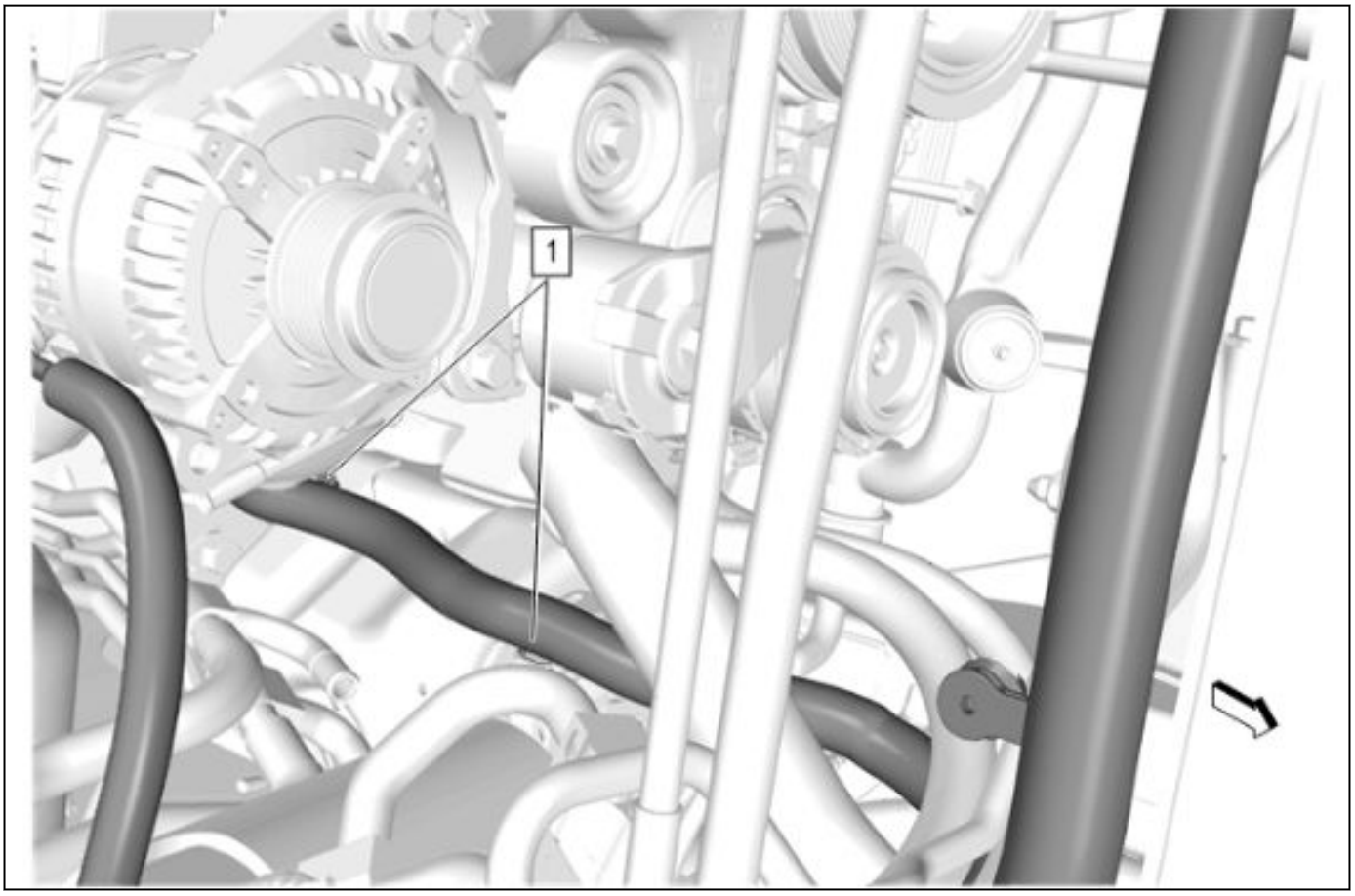

5662379

6. Connect the wiring harness retainers as necessary. (1)
7. Lower the vehicle.

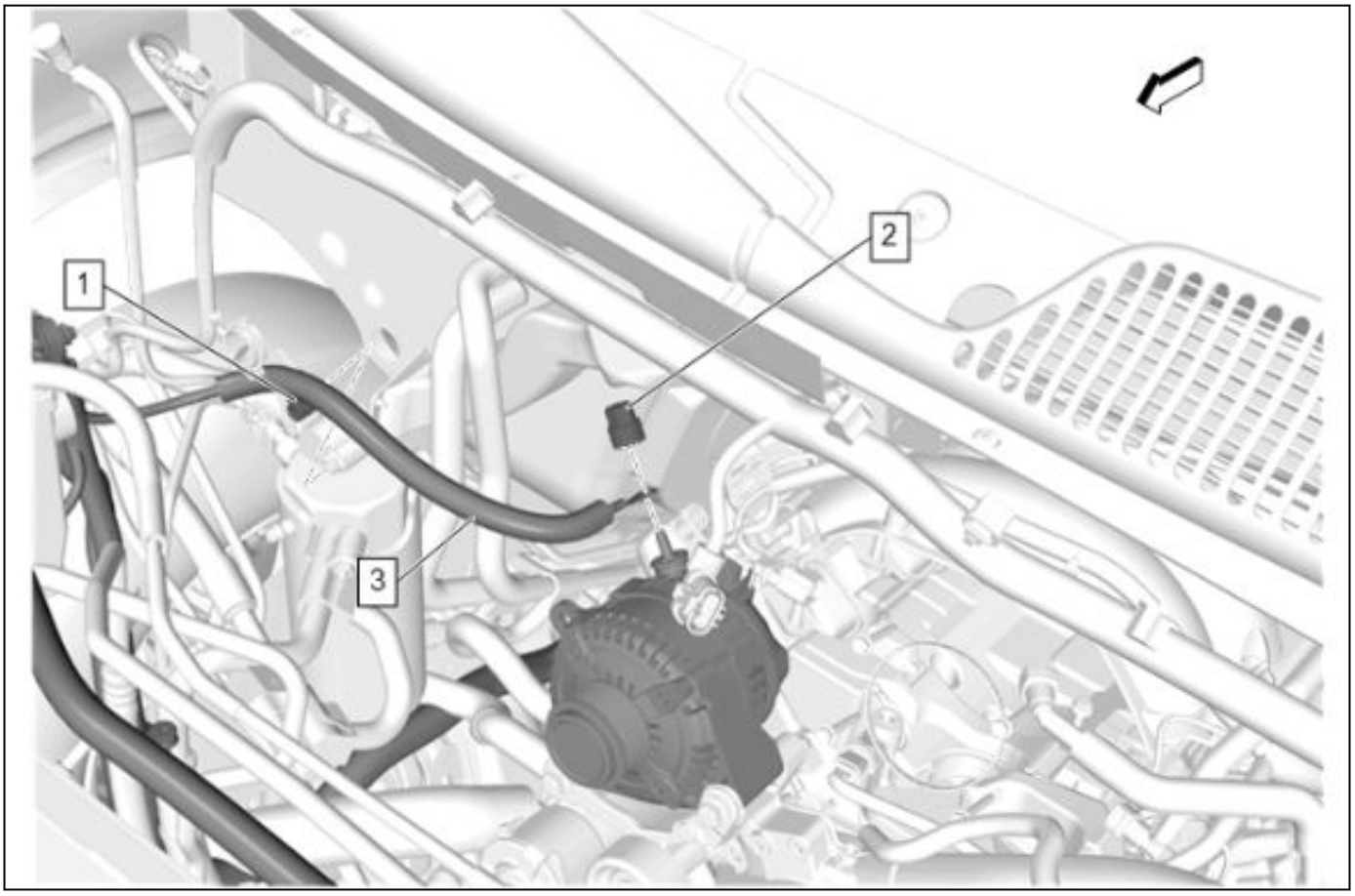

5662371

8. Battery Positive Cable (3) » Install
9. Battery Positive Cable Nut (2) » Install— *Generator Replacement 3-104* *Generator Replacement 3-109*

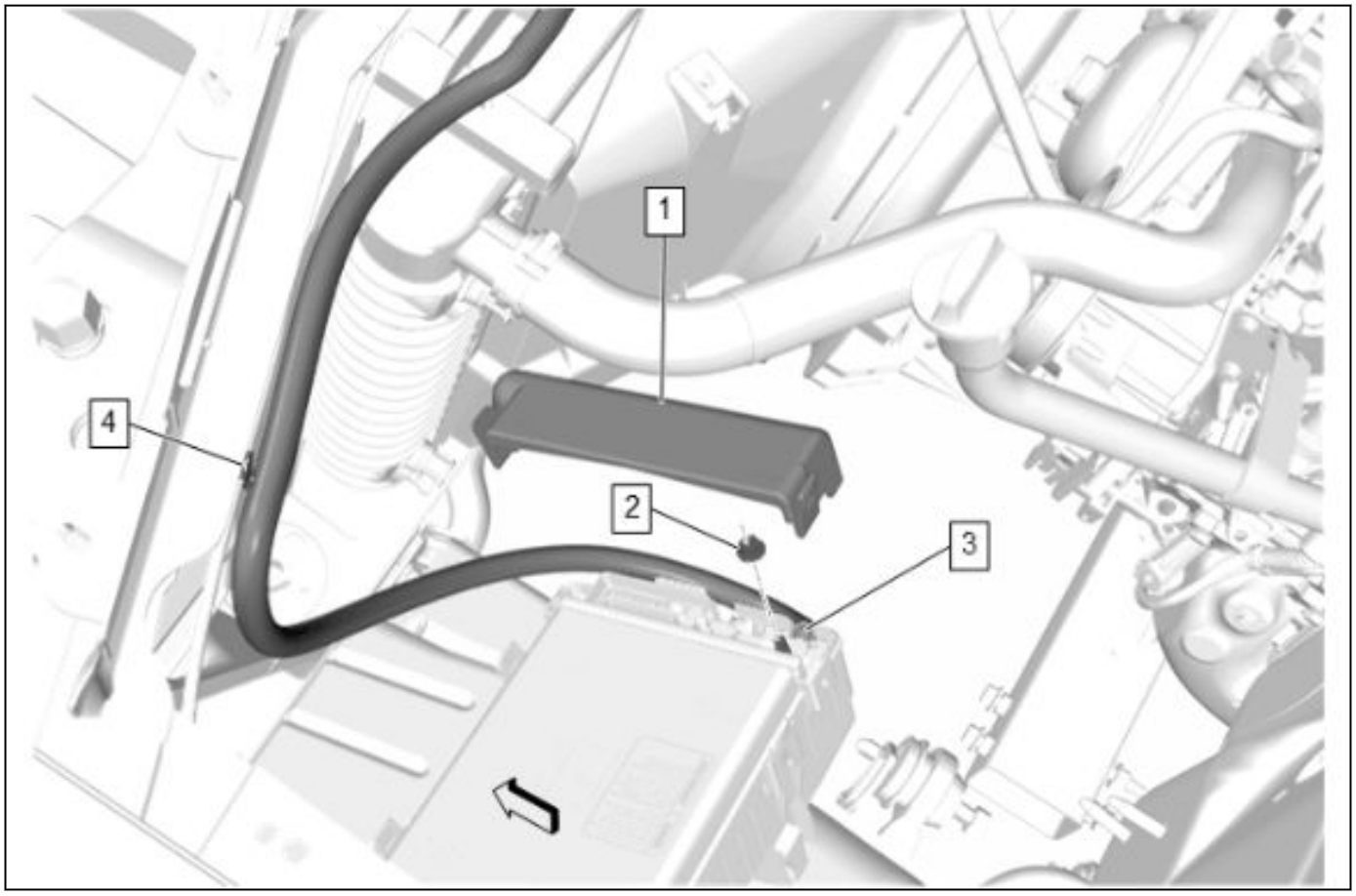

5694639

10. Battery Positive Cable (3) » Install

Caution: Refer to [Link target (target-id 178169-) not found]

11. Battery Positive Cable Nut (2) » Install and tighten**10** N•m **(89 lb in)**
12. Accessory Wiring Junction Block Cover (1) » Install
13. Connect the wiring harness retainers as necessary. (4)

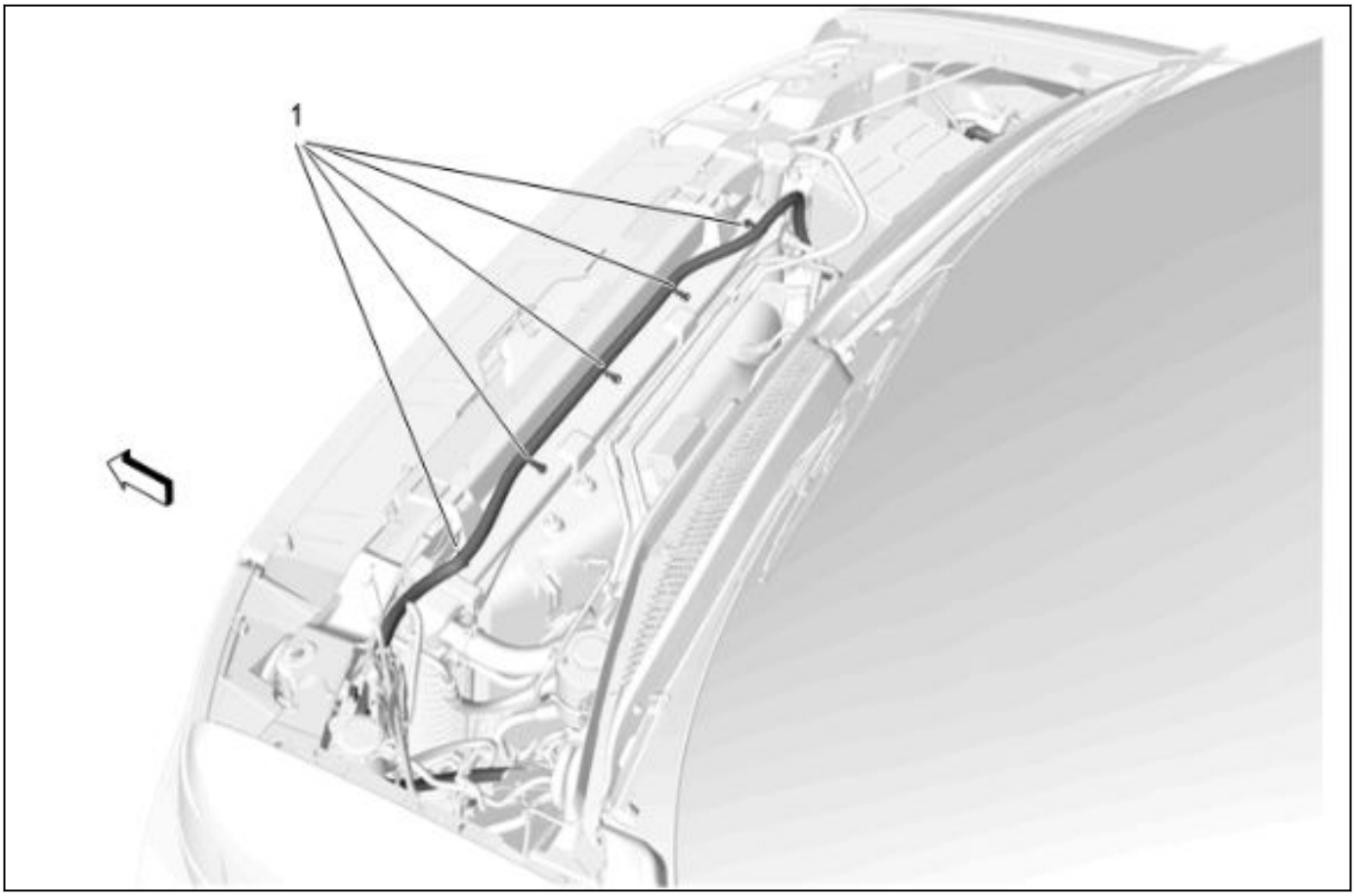

5662352

14. Battery Positive Cable Retainer (1) » Engage[5x]

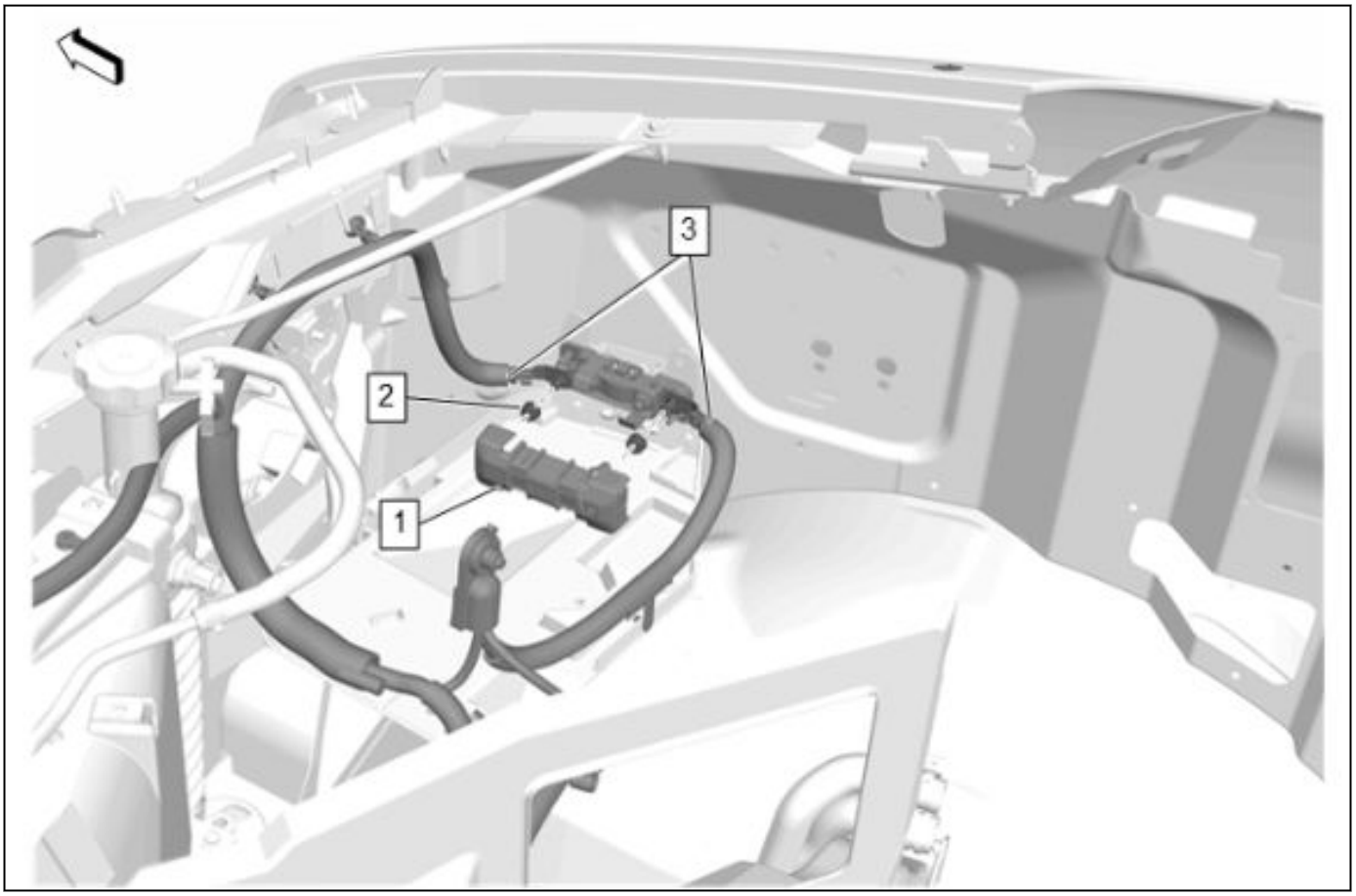

5694205

15. Battery Positive Cable (3) » Install[2x]
16. Front Compartment Fuse Block Cable Nut (2) » Install[2x] — *Front Compartment Fuse Block Replacement (L8T) 5-546*
17. Front Compartment Fuse Block Cover(1) » Install

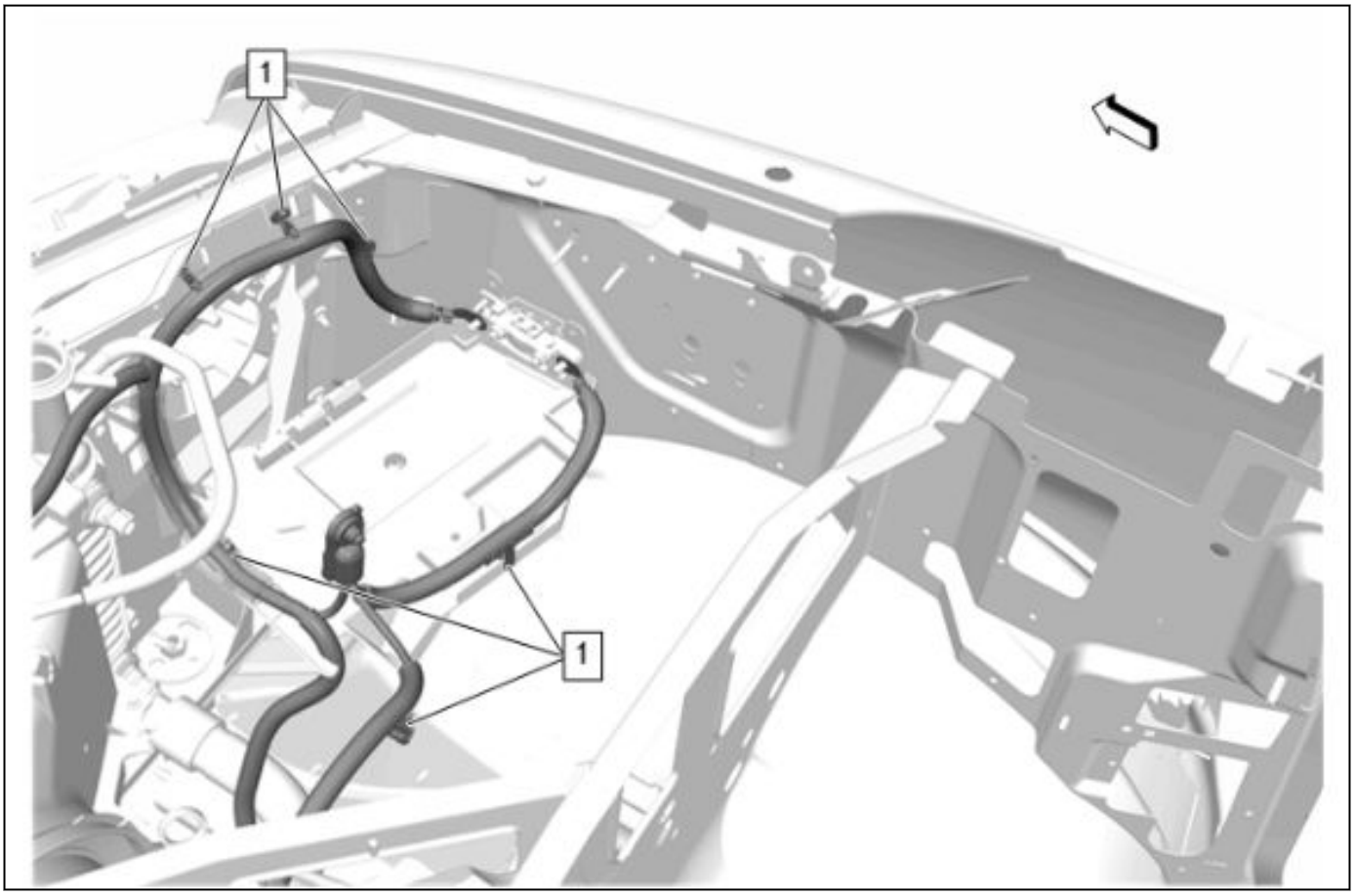

5694656

18. Retainer (1) » Install[6x]

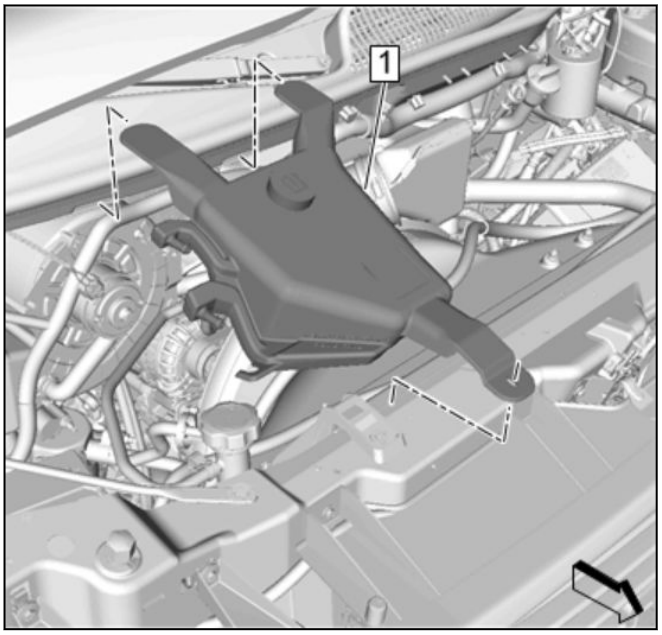

4840951

19. Coolant Recovery Reservoir (1) » Install— [Link target (target-id 37161-) not found]

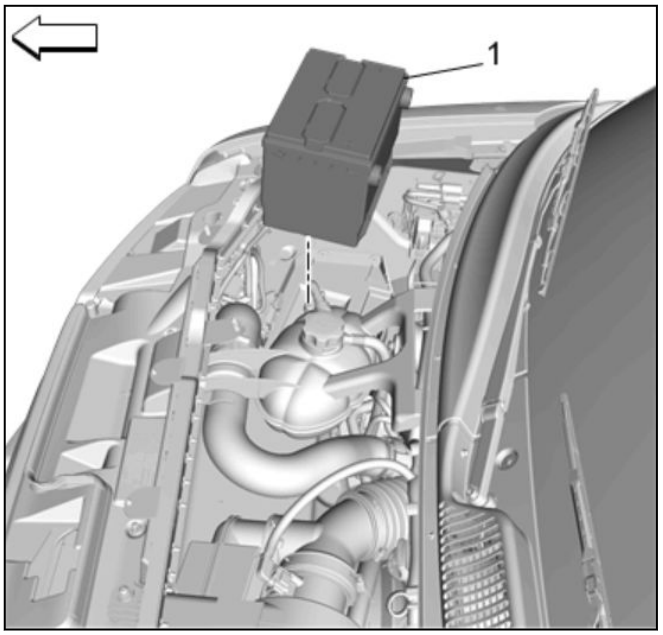

4597853

20. Install the battery. *Battery Replacement 3-85*

Battery Positive Cable Replacement

Removal Procedure

1. Disconnect the negative battery cable. *Battery Negative Cable Disconnection and Connection 3-8* *Battery Negative Cable Disconnection and Connection 3-9*

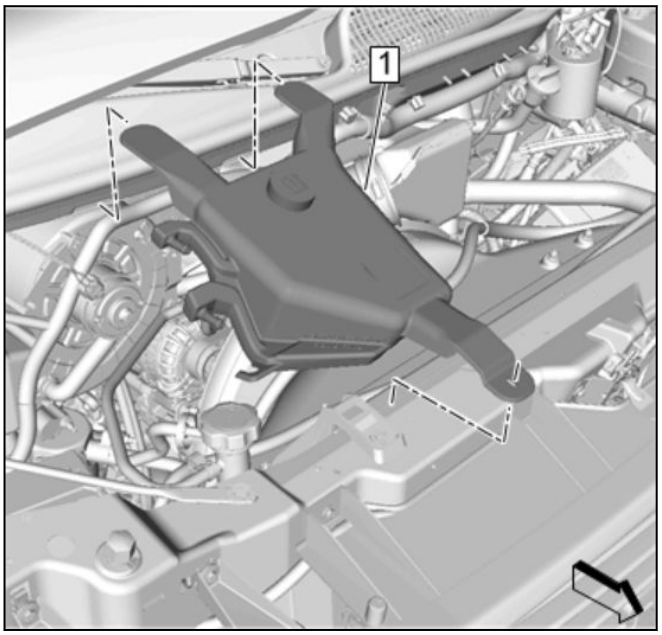

4840951

2. Coolant Recovery Reservoir (1) » Reposition—[Link target (target-id 37161-) not found]

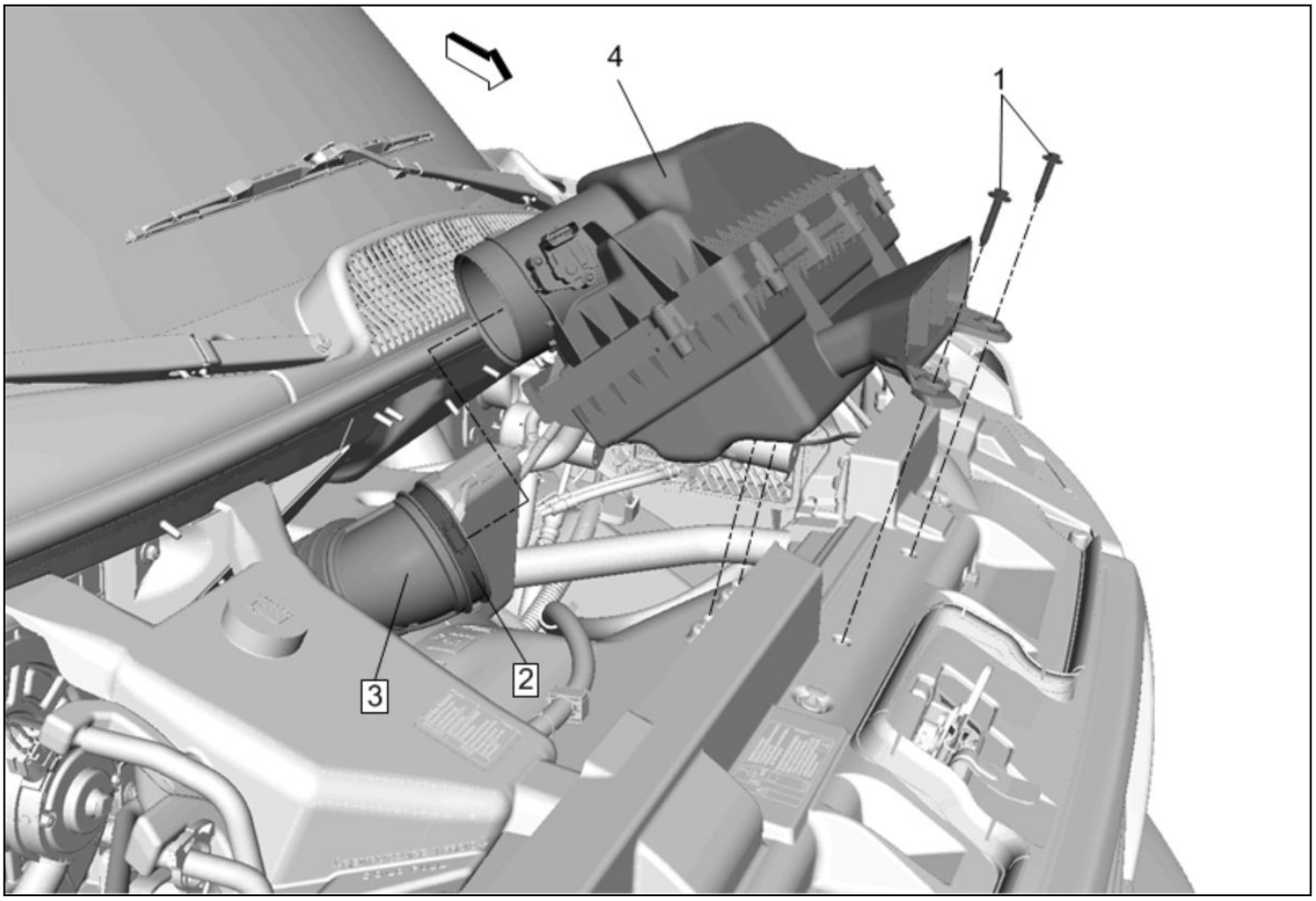

4843165

3. Air Cleaner Assembly (4) » Remove— [Link target (target-id 227463-) not found]

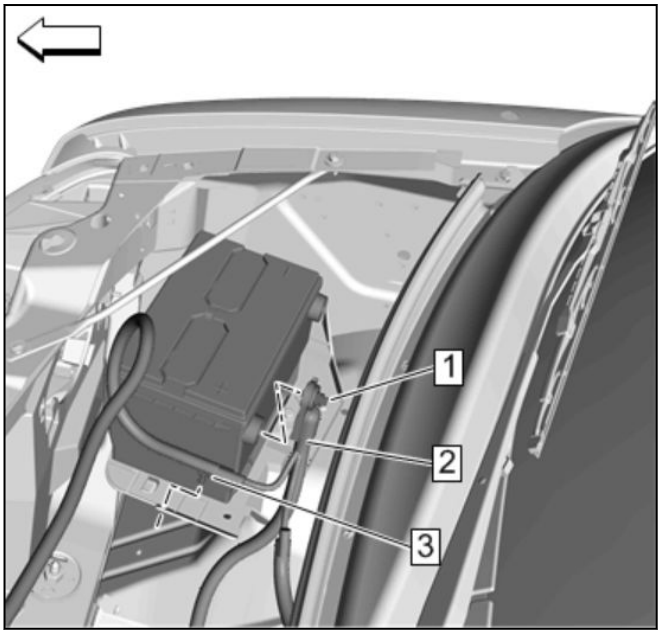

4843249

4. Battery Positive Cable Fastener (1) » Loosen
5. Battery Positive Cable Retainer (3) » Disengage[3x]
6. Battery Positive Cable (2) » Reposition away

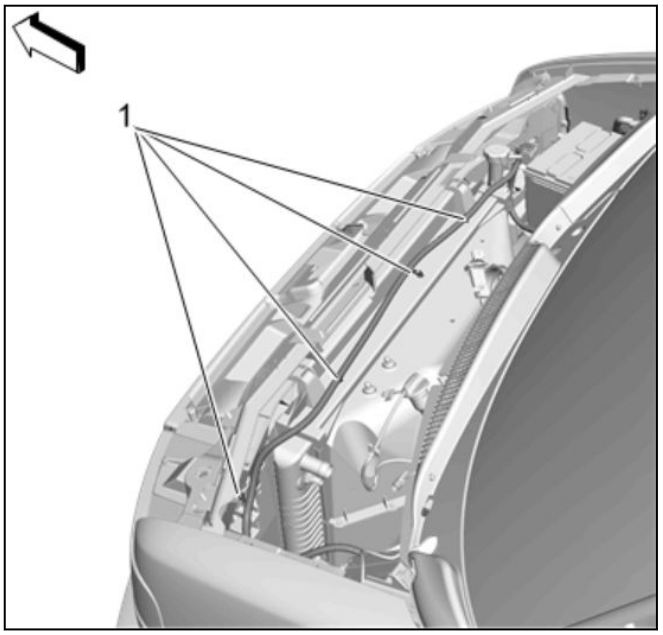

4842459

7. Battery Positive Cable Retainer (1) » Disengage[4x]

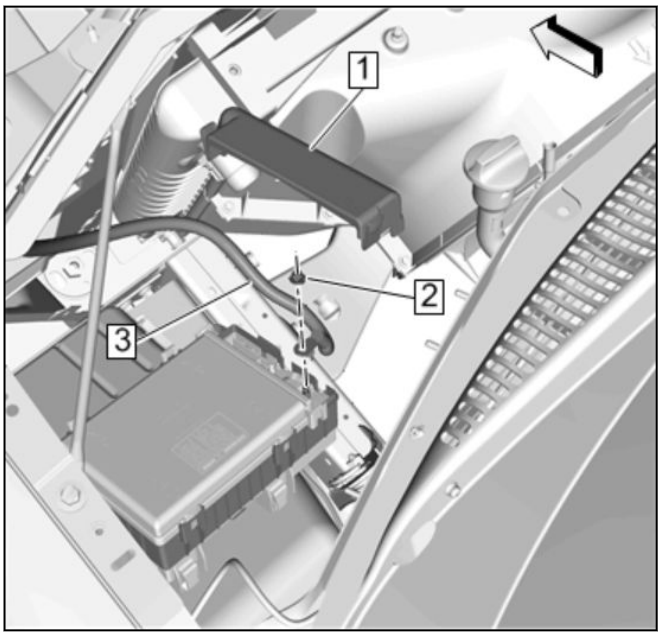

4842479

8. Accessory Wiring Junction Block Cover (1) » Remove
9. Battery Positive Cable Nut (2) » Remove
10. Battery Positive Cable (3) » Remove

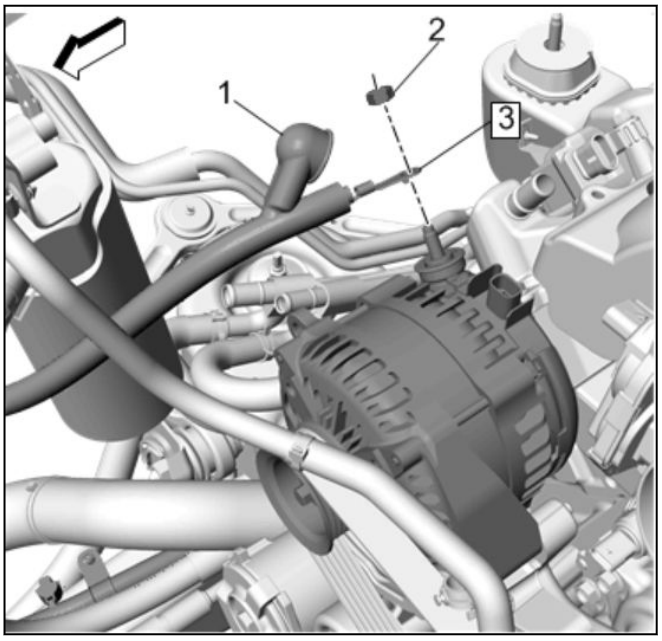

4842668

11. Battery Positive Cable Terminal Boot (1) » Remove
12. Battery Positive Cable Nut (2) » Remove
13. Battery Positive Cable (3) » Remove

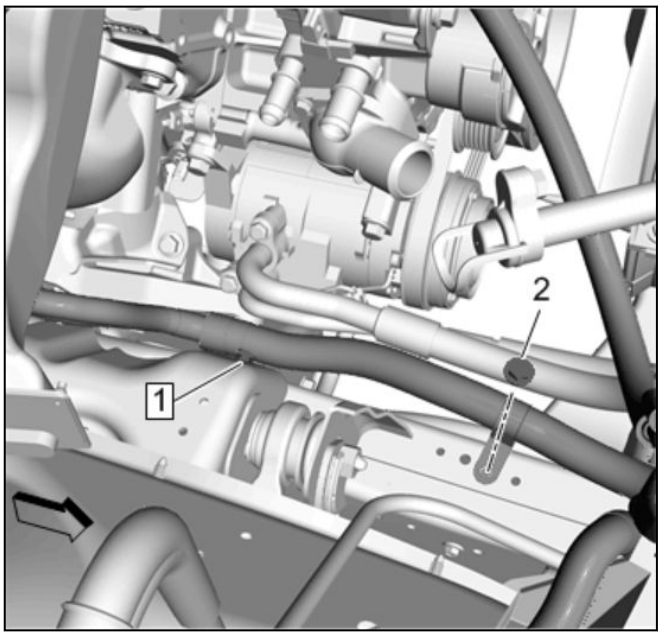

4842531

14. Battery Positive Cable Retainer Bolt (2) » Remove
15. Battery Positive Cable Retainer (1) » Disengage
16. Raise and support the vehicle. [Link target (target-id 47852-) not found]

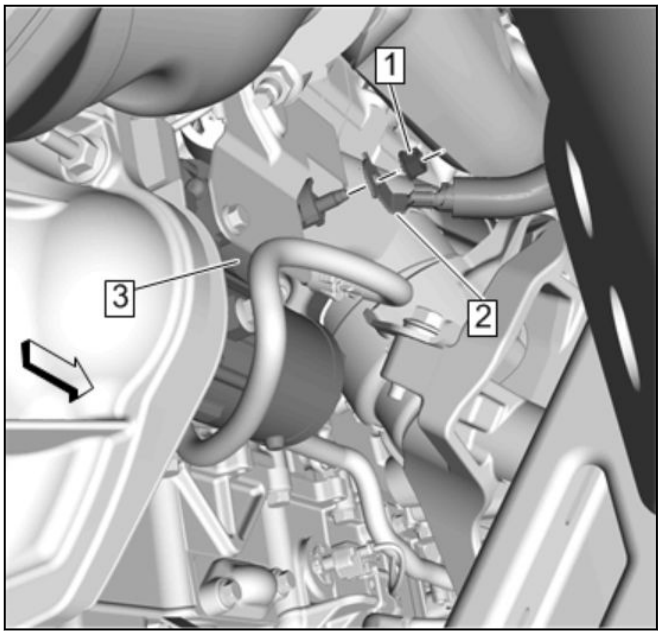

4842542

17. Battery Positive Cable Nut (1) @ Starter Solenoid (3) » Remove
18. Battery Positive Cable (2) » Remove
19. Lower the vehicle.
20. Remove the battery positive cable from the vehicle.

Installation Procedure

1. Position the battery positive cable in the engine compartment.
2. Raise and support the vehicle. [Link target (target-id 47852-) not found]

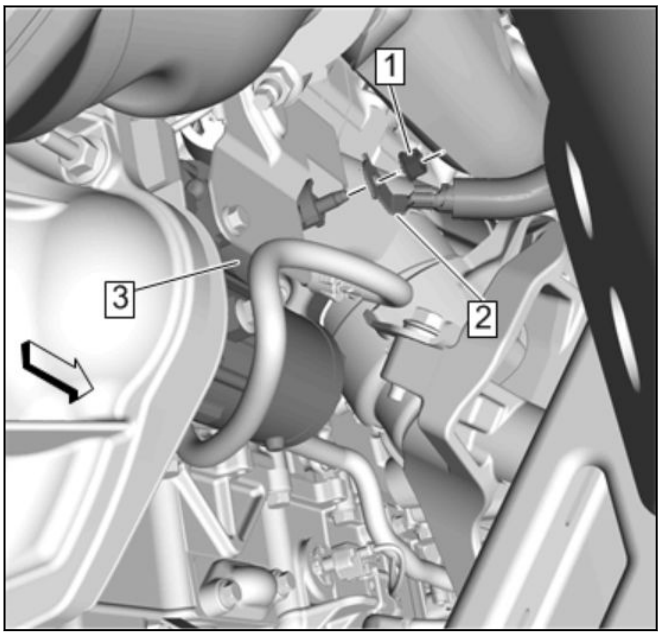

4842542

3. Battery Positive Cable (2) » Install

Caution: Refer to [Link target (target-id 178169-) not found]

4. Battery Positive Cable Nut (1) @ Starter Solenoid (3) » Install and tighten **14** N•m **(124 lb in)**
5. Lower the vehicle.

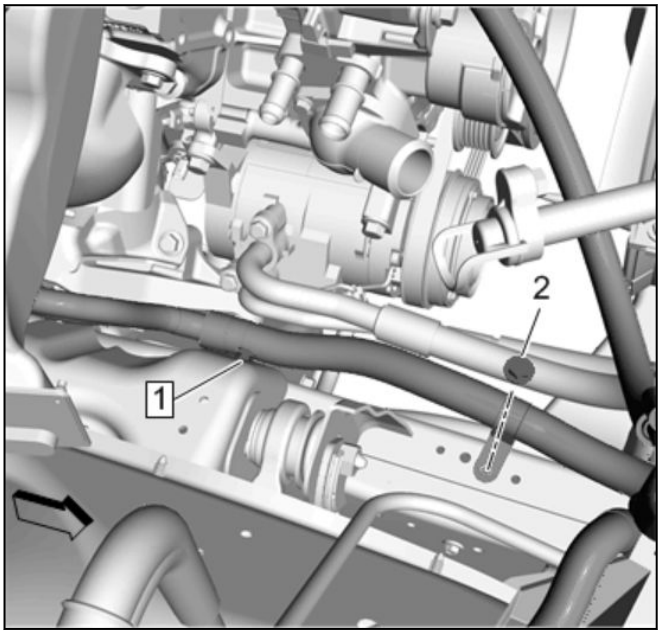

4842531

6. Battery Positive Cable Retainer Bolt (2) » Install and tighten **10** N•m **(89 lb in)**
7. Battery Positive Cable Retainer (1) » Engage

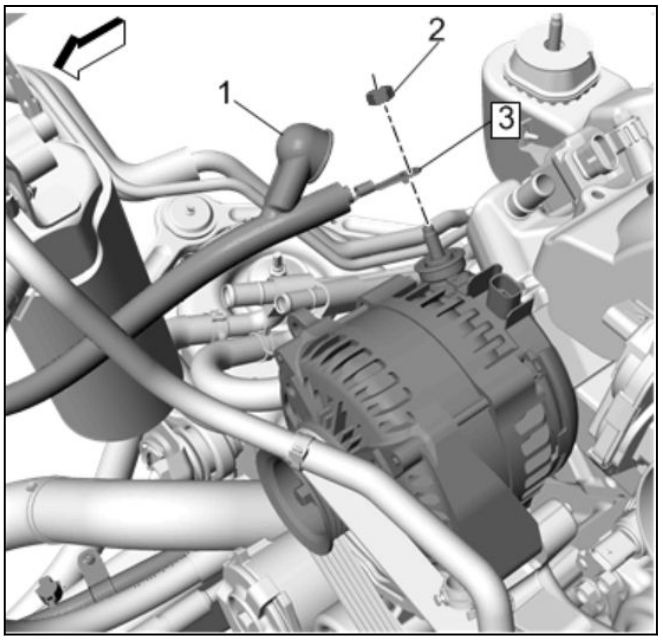

4842668

8. Battery Positive Cable (3) » Install
9. Battery Positive Cable Nut (2) » Install and tighten **15** N•m **(11 lb ft)**
10. Battery Positive Cable Terminal Boot (1) » Install

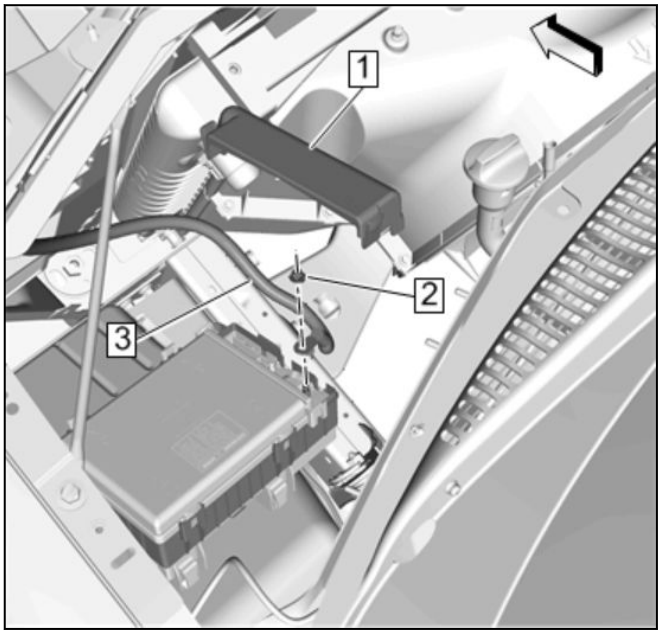

4842479

11. Battery Positive Cable (3) » Install
12. Battery Positive Cable Nut (2) » Install and tighten **10** N•m **(89 lb in)**
13. Accessory Wiring Junction Block Cover (1) » Install

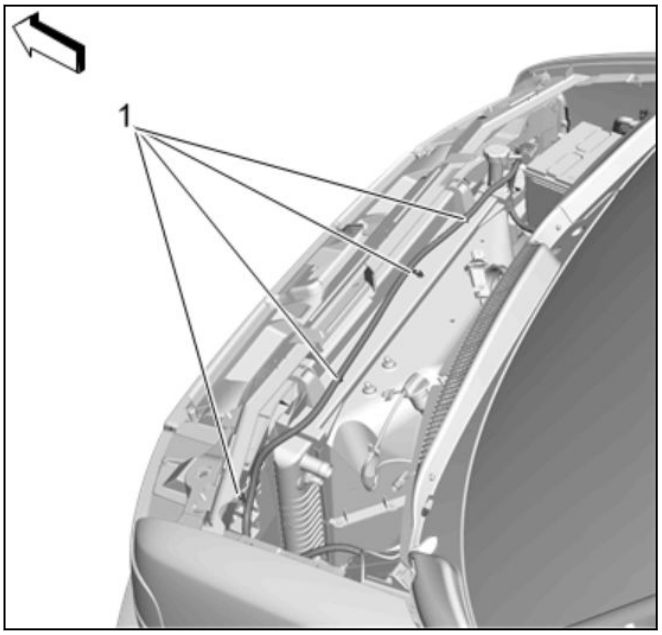

4842459

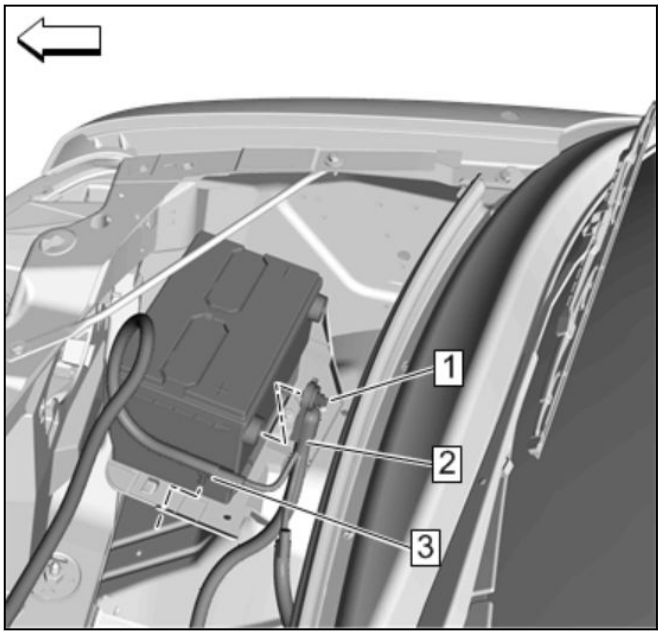

4843249

14. Battery Positive Cable Retainer (1) » Engage[4x]

15. Battery Positive Cable (2) » Install
16. Battery Positive Cable Fastener (1) » Tighten**13** N•m **(115 lb in)**
17. Battery Positive Cable Retainer (3) » Engage[3x]

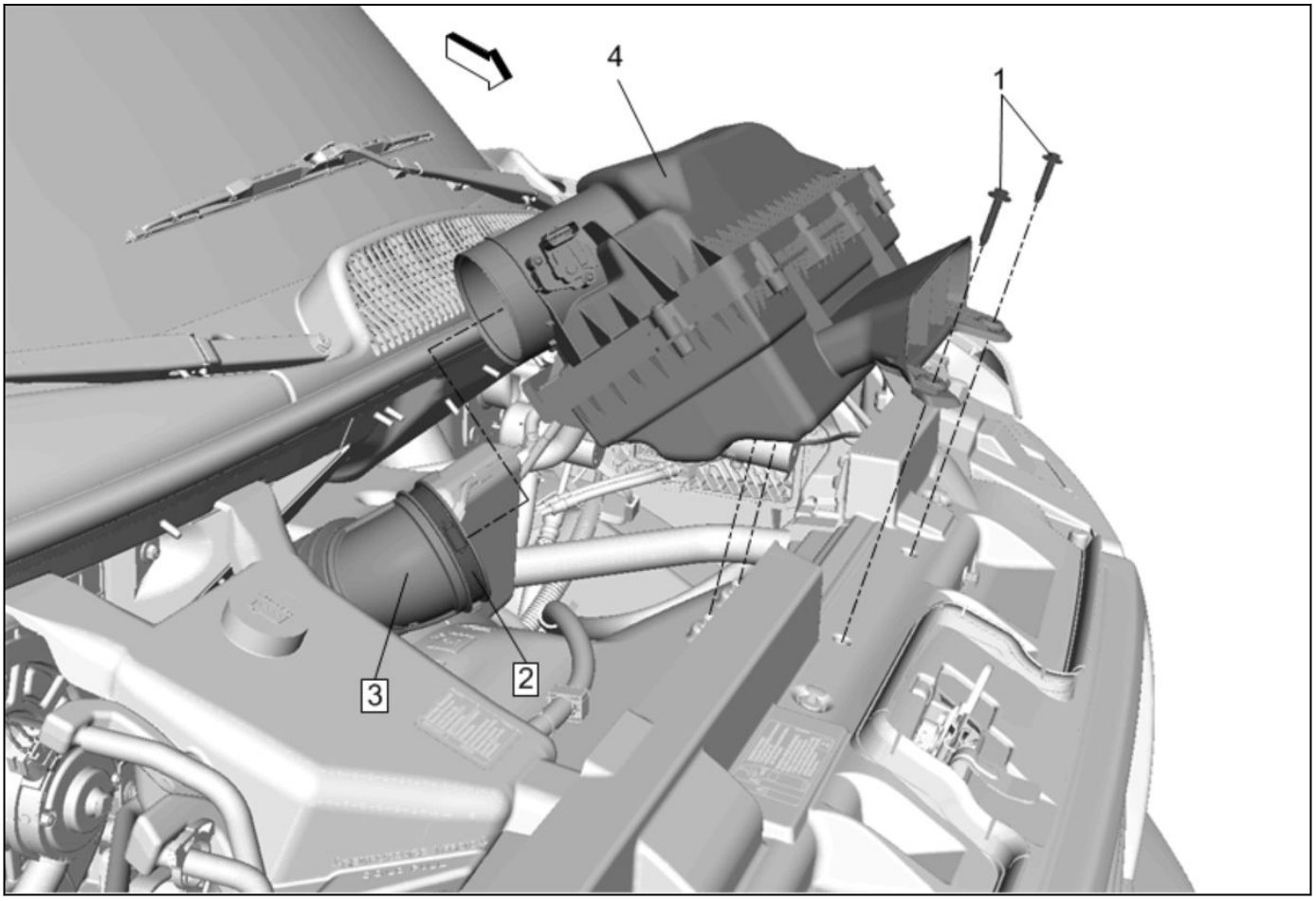

4843165

18. Air Cleaner Assembly (4) » Install— [Link target (target-id 227463-) not found]

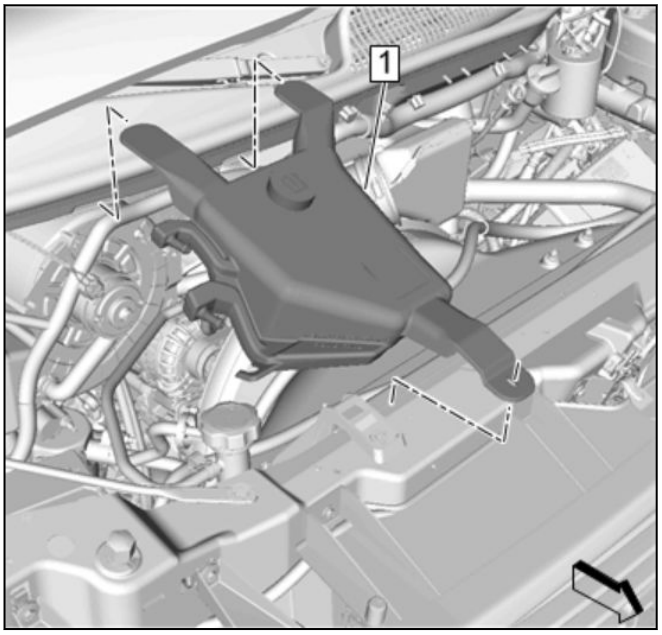

4840951

19. Coolant Recovery Reservoir (1) » Install— [Link target (target-id 37161-) not found]
20. Connect the battery negative cable. *Battery Negative Cable Disconnection and Connection 3-8* *Battery Negative Cable Disconnection and Connection 3-9*

Battery Positive Cable Replacement

Removal Procedure

1. Disconnect the negative battery cable. *Battery Negative Cable Disconnection and Connection 3-8* *Battery Negative Cable Disconnection and Connection 3-9*

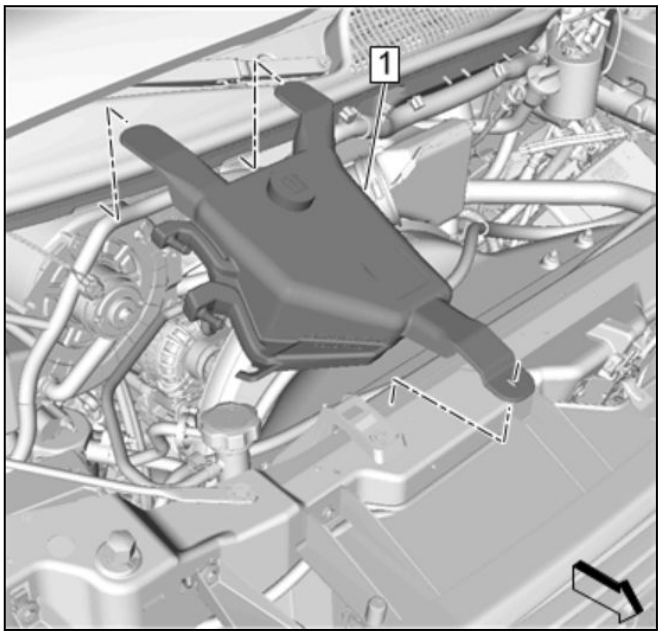

4840951

2. Coolant Recovery Reservoir (1) » Reposition— [Link target (target-id 37161-) not found]

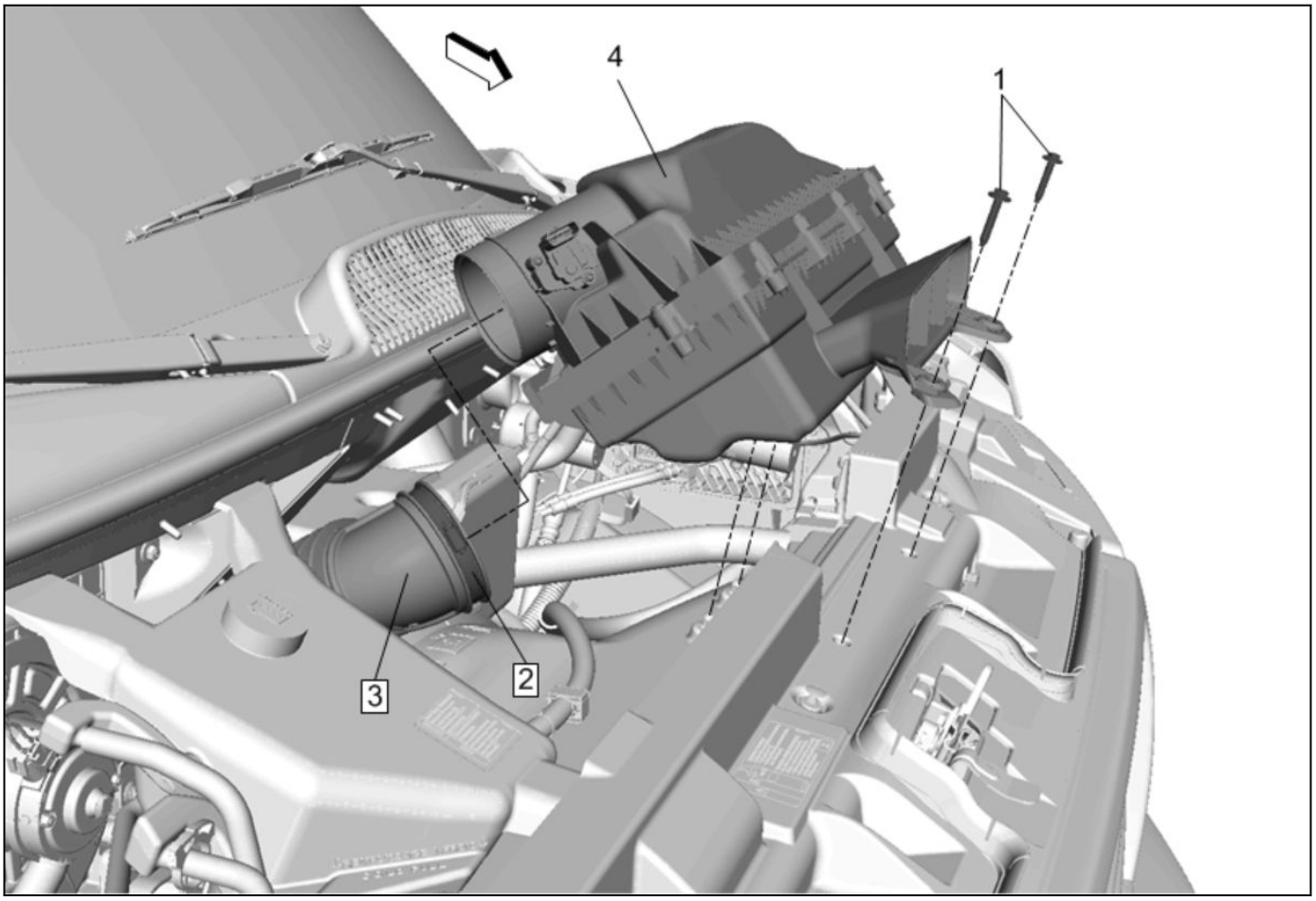

4843165

3. Air Cleaner Assembly (4) » Remove— [Link target (target-id 227463-) not found]

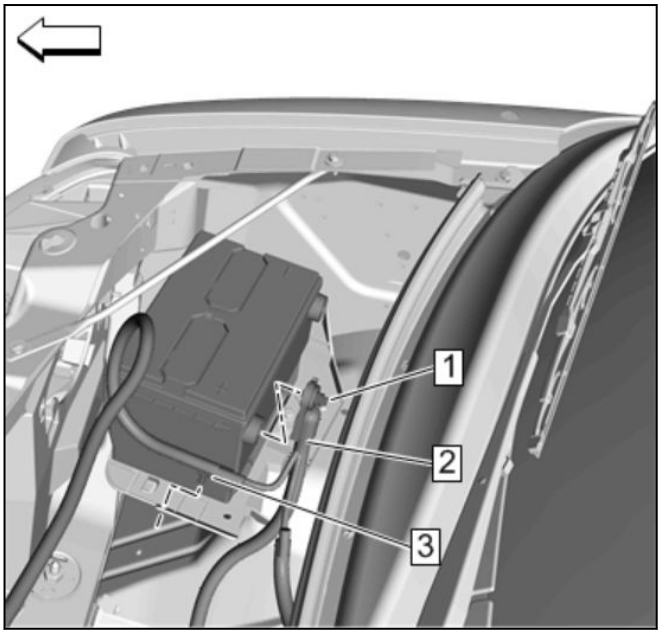

4843249

4. Battery Positive Cable Fastener (1) » Loosen
5. Battery Positive Cable Retainer (3) » Disengage[3x]
6. Battery Positive Cable (2) » Reposition away

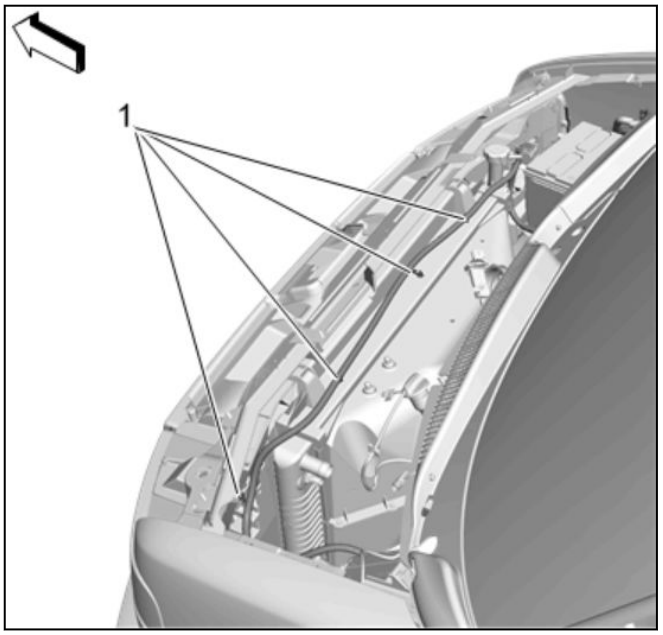

4842459

7. Battery Positive Cable Retainer (1) » Disengage[4x]

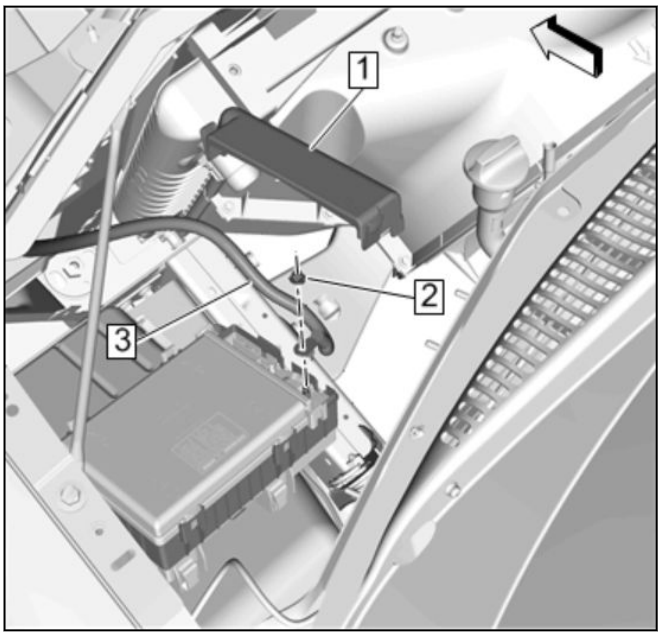

4842479

8. Accessory Wiring Junction Block Cover (1) » Remove
9. Battery Positive Cable Nut (2) » Remove
10. Battery Positive Cable (3) » Remove
11. Remove the engine cover. [Link target (target-id 51637-) not found]

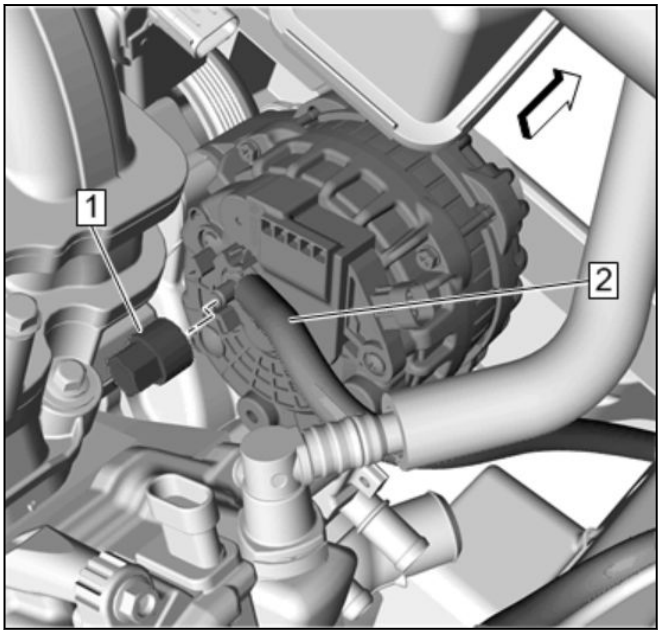

4842498

12. Battery Positive Cable Nut (1) » Remove
13. Battery Positive Cable (2) » Remove

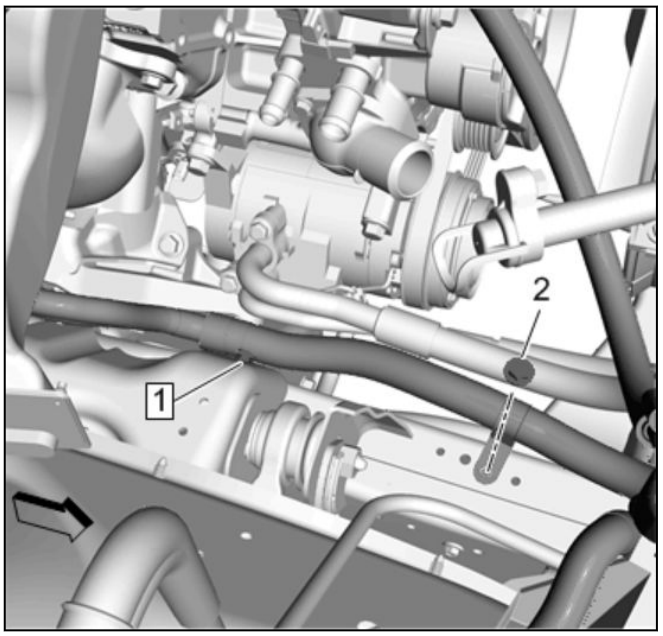

4842531

14. Battery Positive Cable Retainer Bolt (2) » Remove
15. Battery Positive Cable Retainer (1) » Disengage
16. Raise and support the vehicle. [Link target (target-id 47852-) not found]

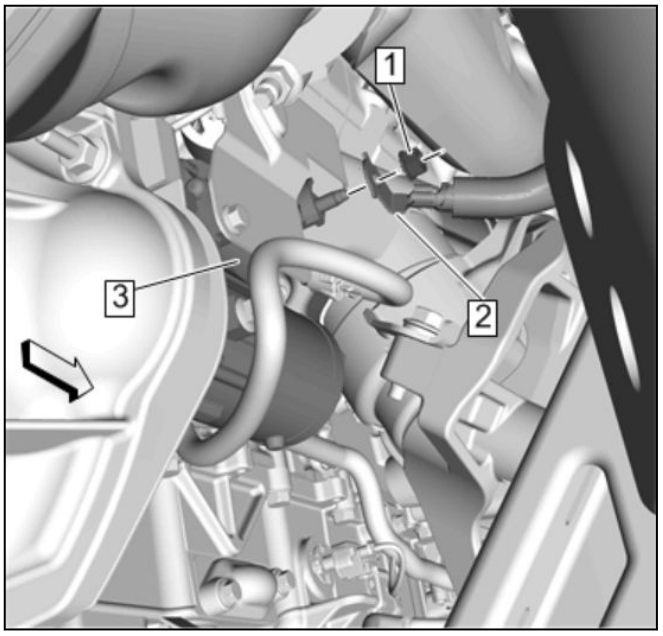

4842542

17. Battery Positive Cable Nut (1) @ Starter Solenoid (3) » Remove
18. Battery Positive Cable (2) » Remove
19. Lower the vehicle.
20. Remove the battery positive cable from the vehicle.

Installation Procedure

1. Position the battery positive cable in the engine compartment.
2. Raise and support the vehicle. [Link target (target-id 47852-) not found]

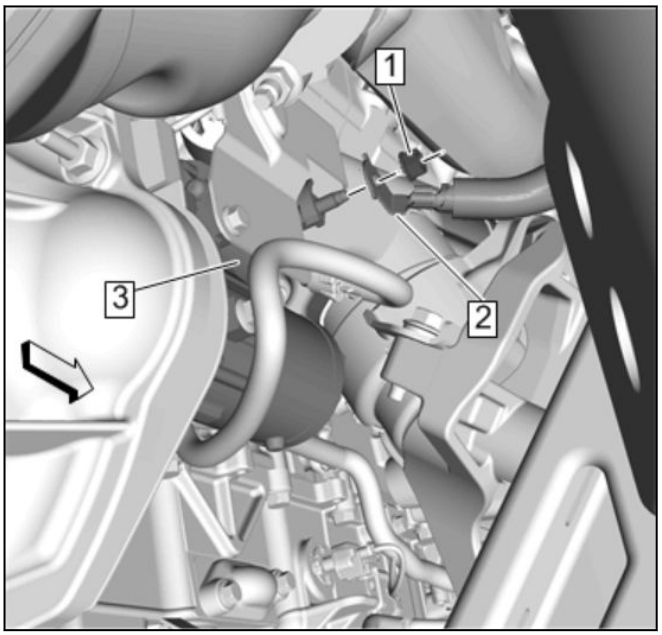

4842542

3. Battery Positive Cable (2) » Install

Caution: Refer to [Link target (target-id 178169-) not found]

4. Battery Positive Cable Nut (1) @ Starter Solenoid (3) » Install and tighten **14** N•m **(124 lb in)**
5. Lower the vehicle.

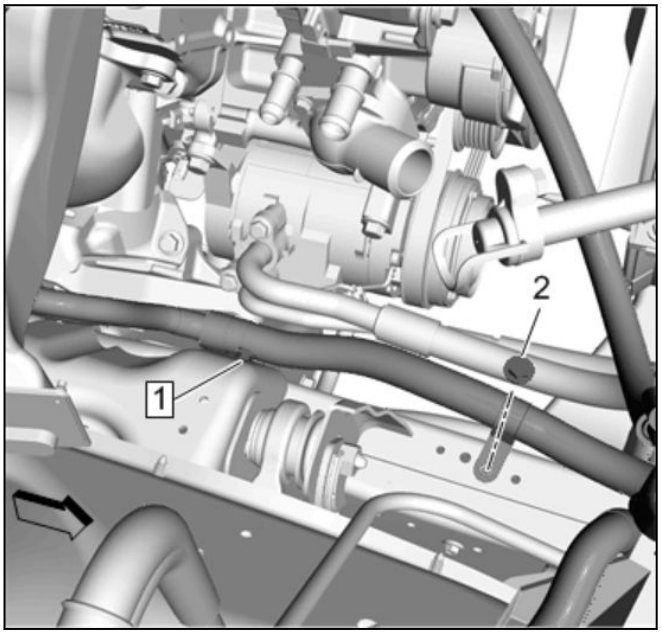

4842531

6. Battery Positive Cable Retainer Bolt (2) » Install and tighten **10** N•m **(89 lb in)**
7. Battery Positive Cable Retainer (1) » Engage

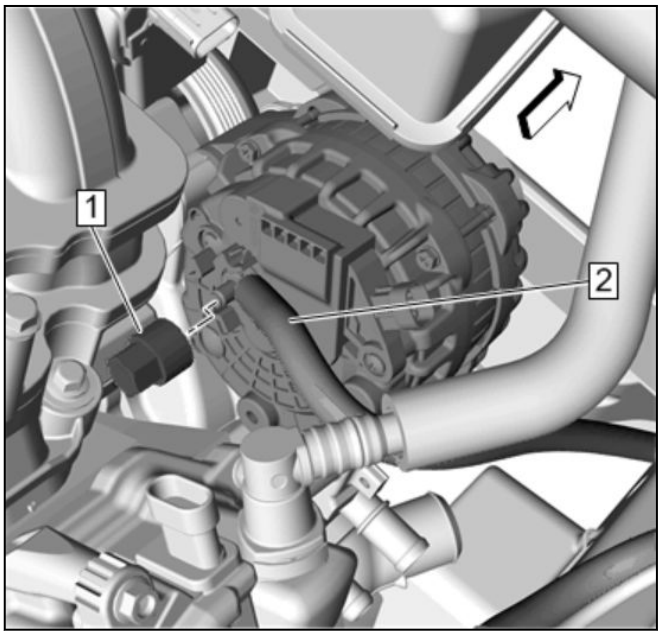

4842498

8. Battery Positive Cable (2) » Install
9. Battery Positive Cable Nut (1) » Install and tighten **15** N•m **(11 lb ft)**
10. Install the engine cover. [Link target (target-id 51637-) not found]

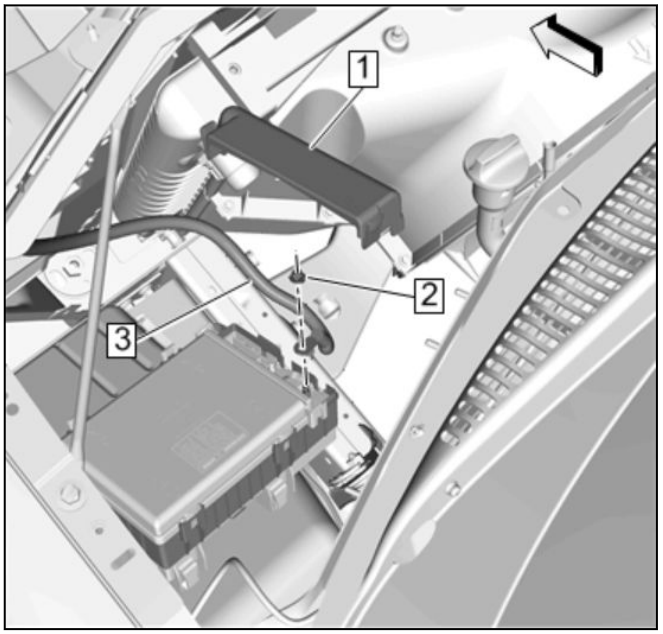

4842479

11. Battery Positive Cable (3) » Install
12. Battery Positive Cable Nut (2) » Install and tighten **10** N•m **(89 lb in)**
13. Accessory Wiring Junction Block Cover (1) » Install

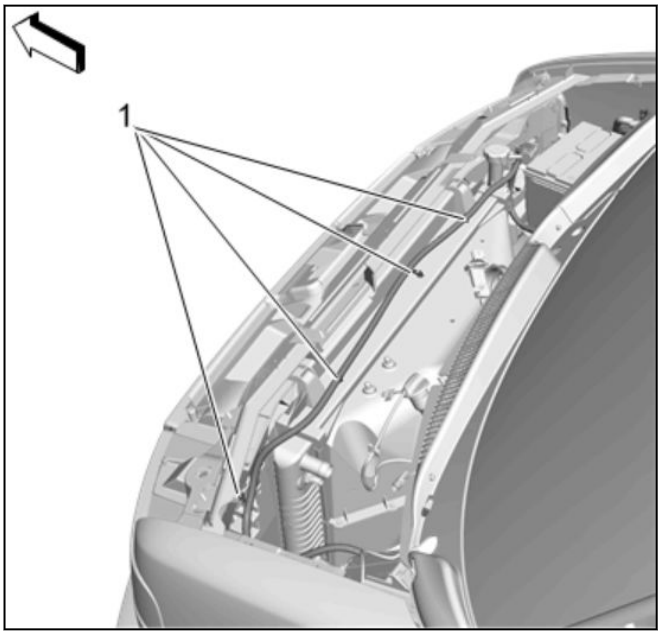

4842459

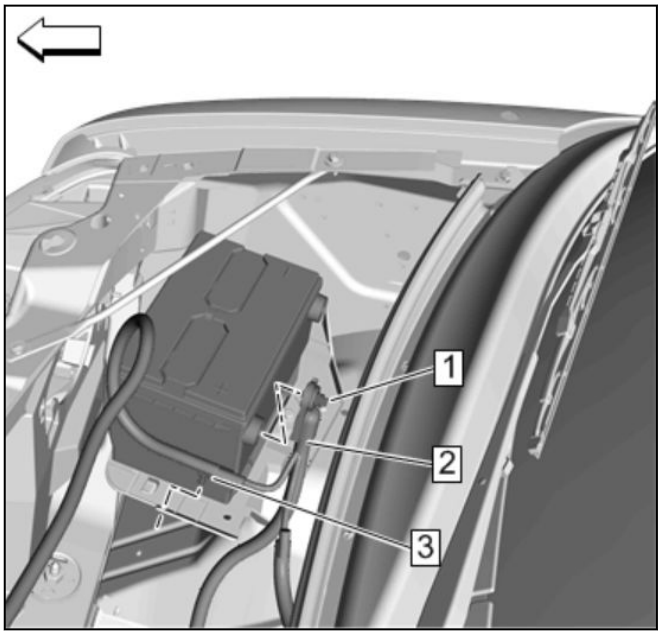

4843249

14. Battery Positive Cable Retainer (1) » Engage[4x]

15. Battery Positive Cable (2) » Install

16. Battery Positive Cable Fastener (1) » Tighten**13** N•m **(115 lb in)**

17. Battery Positive Cable Retainer (3) » Engage[3x]

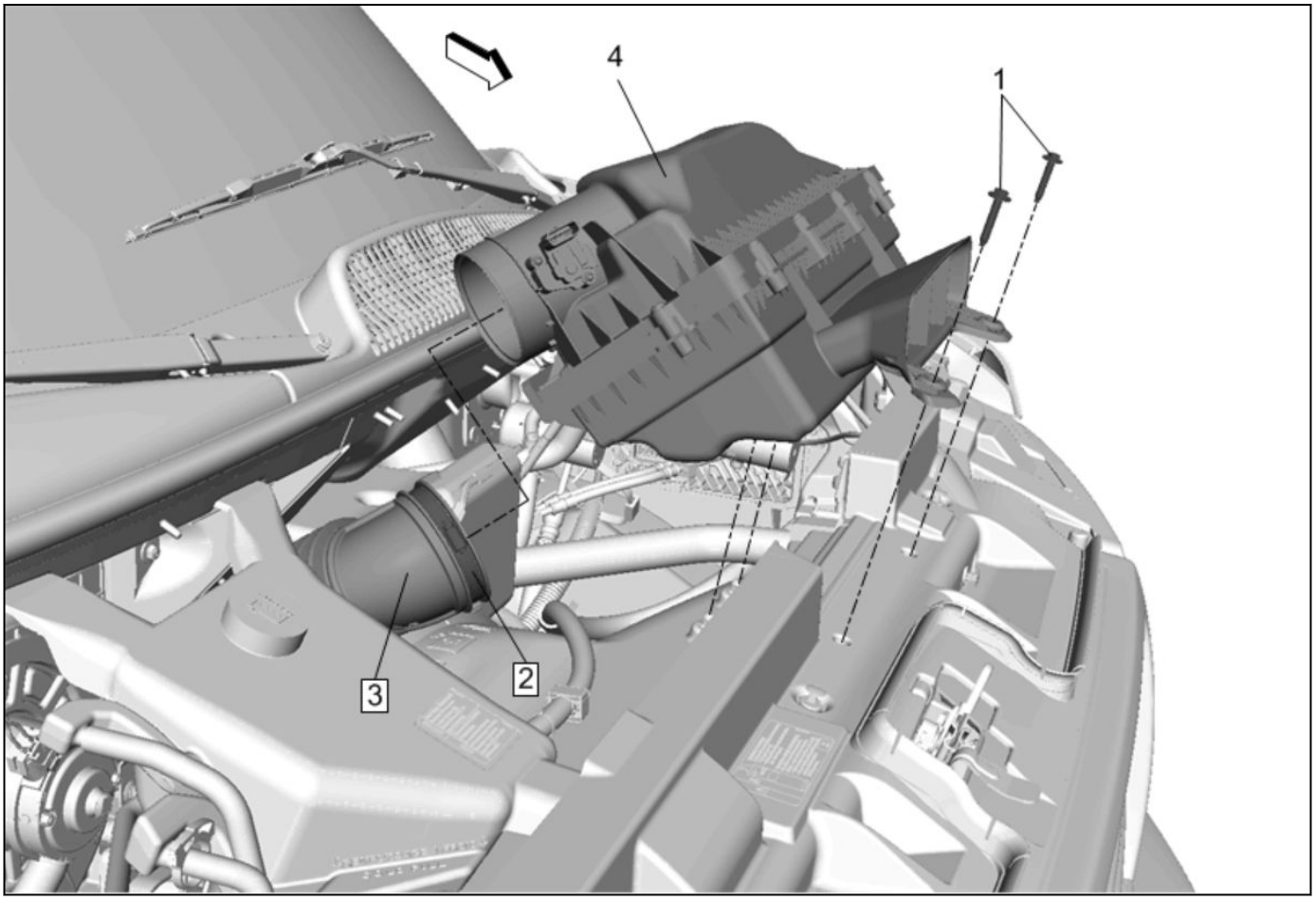

4843165

18. Air Cleaner Assembly (4) » Install— [Link target (target-id 227463-) not found]

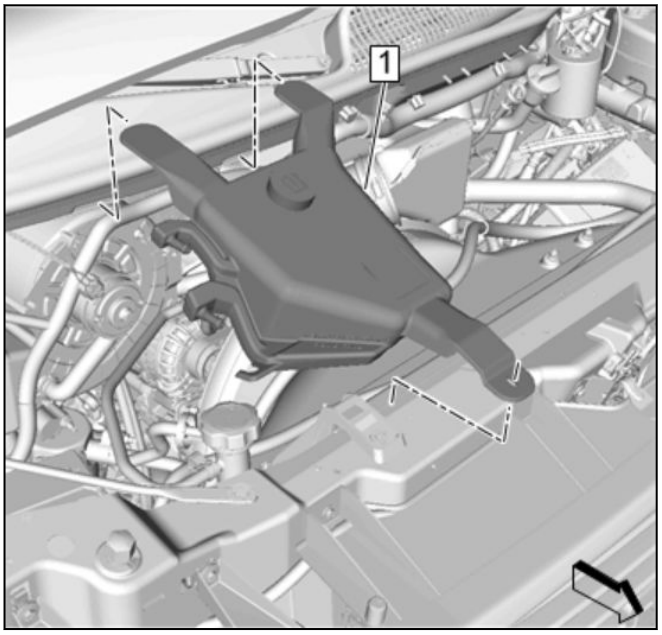

4840951

19. Coolant Recovery Reservoir (1) » Install— [Link target (target-id 37161-) not found]
20. Connect the battery negative cable. *Battery Negative Cable Disconnection and Connection 3-8* *Battery Negative Cable Disconnection and Connection 3-9*

Auxiliary Battery Positive Cable Replacement (Long Wheelbase)

Removal Procedure

1. Disconnect the negative battery cable. *Battery Negative Cable Disconnection and Connection 3-8* *Battery Negative Cable Disconnection and Connection 3-9*
2. Coolant Recovery Reservoir » Remove— [Link target (target-id 37161-) not found]
3. Remove the battery tray. *Battery Tray Replacement 3-88*
4. Raise and support the vehicle. [Link target (target-id 47852-) not found]

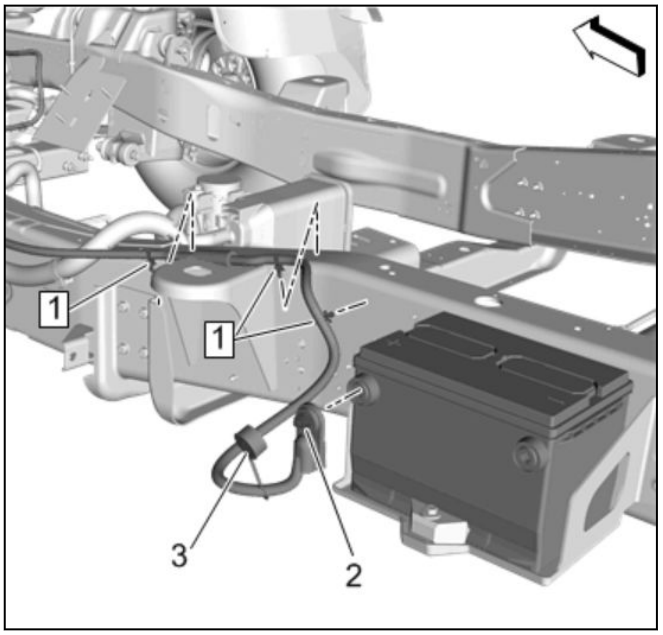

4594258

5. Protective Cap (3) » Reposition
6. Auxiliary Battery Negative Cable Fastener (2) » Remove
7. Retainer (1) » Disengage[3x]

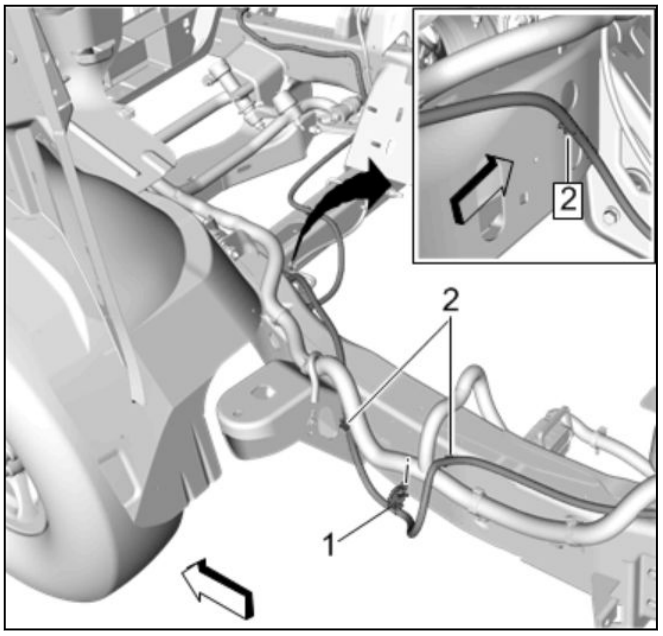

4594261

8. Retainer (2) » Disengage[3x]
9. Retainer Clip (1) » Disengage

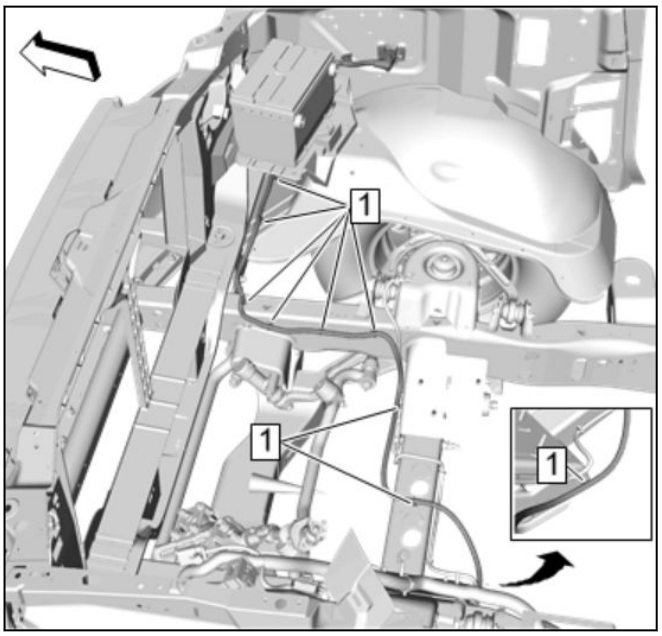

4594262

10. Retainer (1) » Disengage[9x]
11. Lower the vehicle.

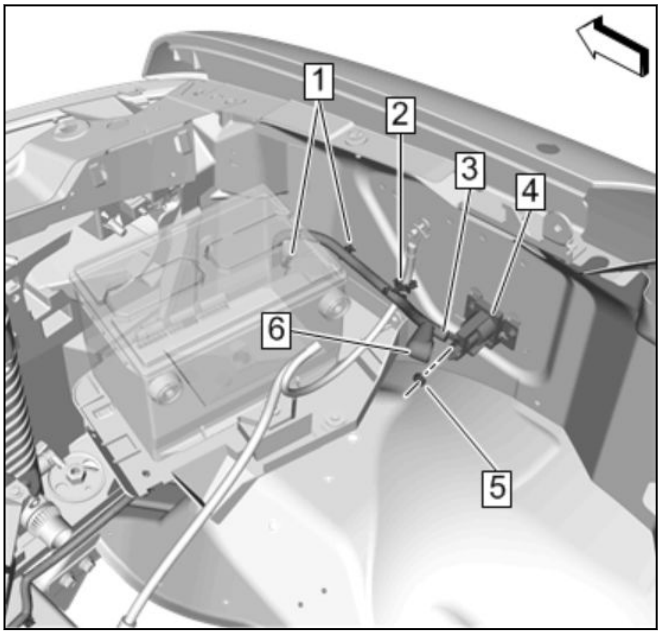

4594263

12. Protective Terminal Boot (6) » Reposition
13. Auxiliary Battery Negative Cable Fastener (5) @ Relay (4) » Remove
14. Retainer (1) » Disengage[2x]
15. Retainer Clip (2) » Disengage
16. Auxiliary Battery Negative Cable (3) » Remove

Installation Procedure

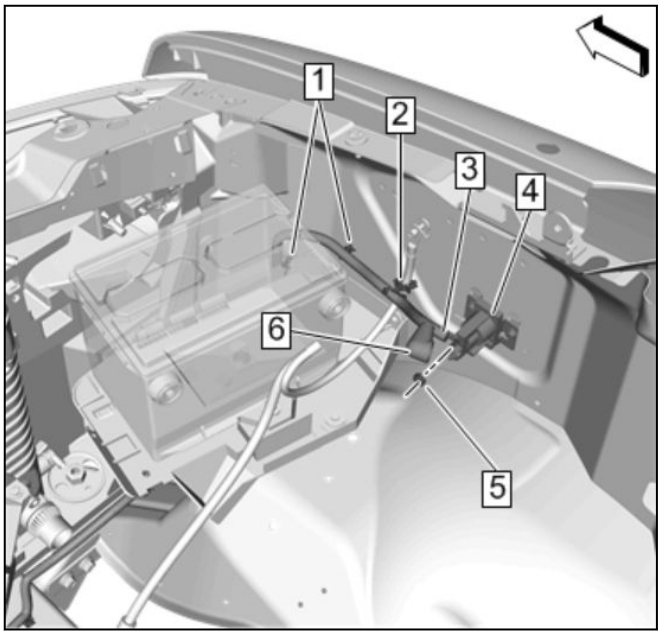

4594263

1. Auxiliary Battery Negative Cable (3) » Install

Caution: Refer to [Link target (target-id 178169-) not found]

2. Auxiliary Battery Negative Cable Fastener (5) @ Relay (4) » Install and tighten**7.5** N•m **(66 lb in)**
3. Retainer (1) » Engage[2x]
4. Retainer Clip (2) » Engage
5. Protective Terminal Boot (6) » Install

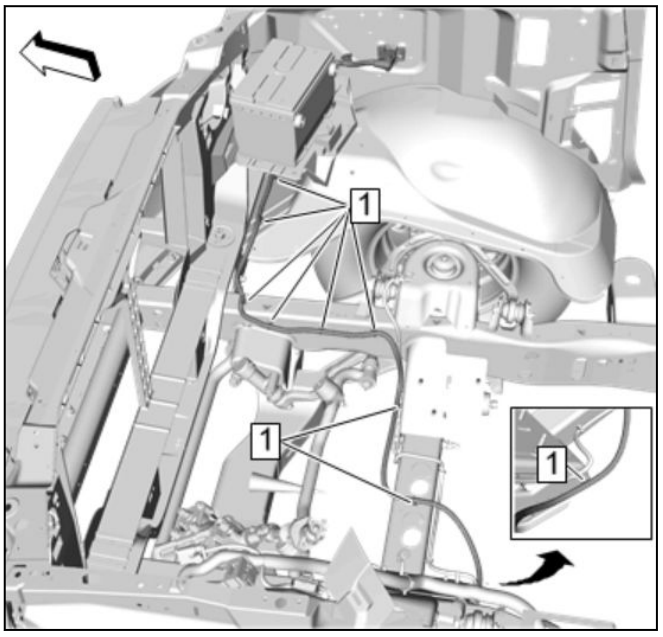

4594262

6. Retainer (1) » Engage[9x]
7. Raise and support the vehicle. [Link target (target-id 47852-) not found]

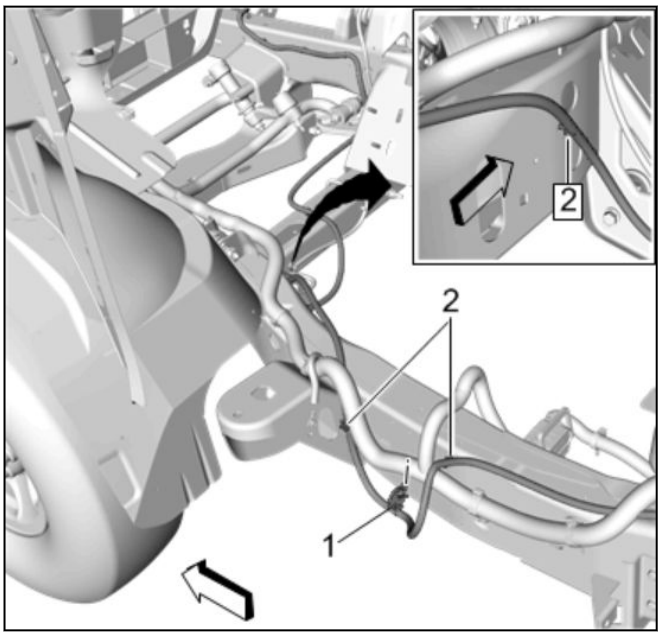

4594261

8. Retainer (2) » Engage[3x]
9. Retainer Clip (1) » Engage

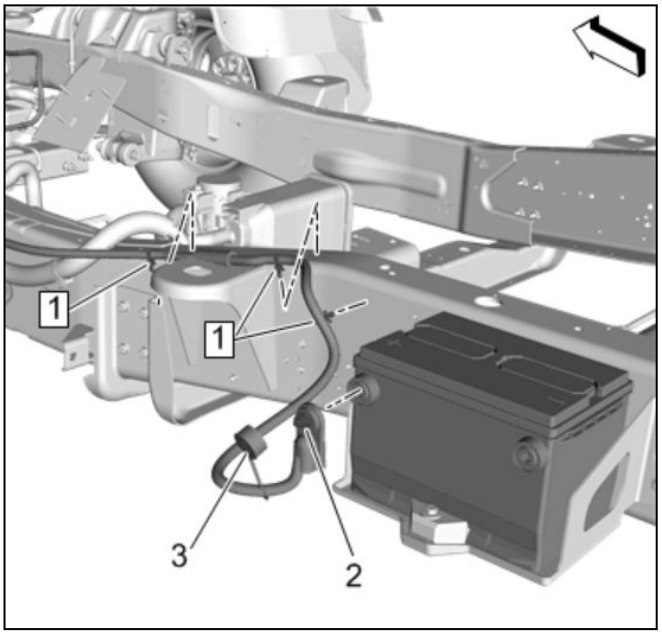

4594258

10. Auxiliary Battery Negative Cable Fastener (2) » Install and tighten**14** N•m **(124 lb in)**
11. Protective Cap (3) » Install
12. Retainer (1) » Engage[3x]
13. Lower the vehicle.
14. Coolant Recovery Reservoir » Install— [Link target (target-id 37161-) not found]
15. Install the battery tray. *Battery Tray Replacement 3-88*
16. Connect the negative battery cable. *Battery Negative Cable Disconnection and Connection 3-8 Battery Negative Cable Disconnection and Connection 3-9*

Auxiliary Battery Positive Cable Replacement (Short Wheelbase)

Removal Procedure

1. Disconnect the negative battery cable. *Battery Negative Cable Disconnection and Connection 3-8 Battery Negative Cable Disconnection and Connection 3-9*
2. Coolant Recovery Reservoir » Remove— [Link target (target-id 37161-) not found]
3. Remove the battery tray. *Battery Tray Replacement 3-88*
4. Raise and support the vehicle. [Link target (target-id 47852-) not found]

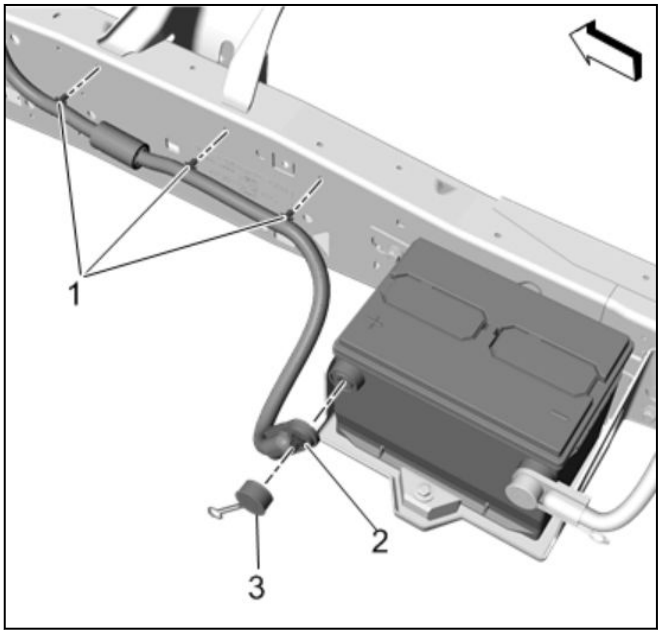

4595711

5. Protective Cap (3) » Reposition
6. Auxiliary Battery Negative Cable Fastener (2) » Remove
7. Retainer (1) » Disengage[3x]

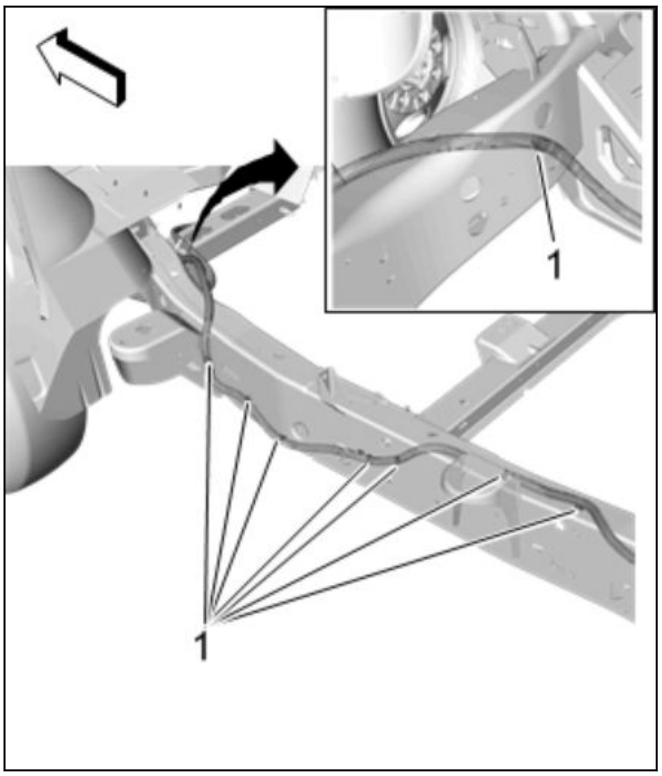

4595712

8. Retainer (2) » Disengage[8x]

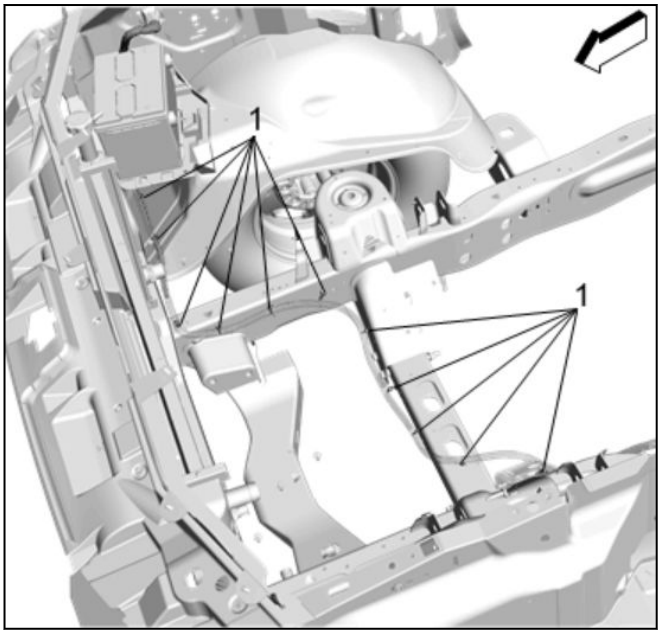

4595847

9. Retainer (1) » Disengage[11x]
10. Lower the vehicle.

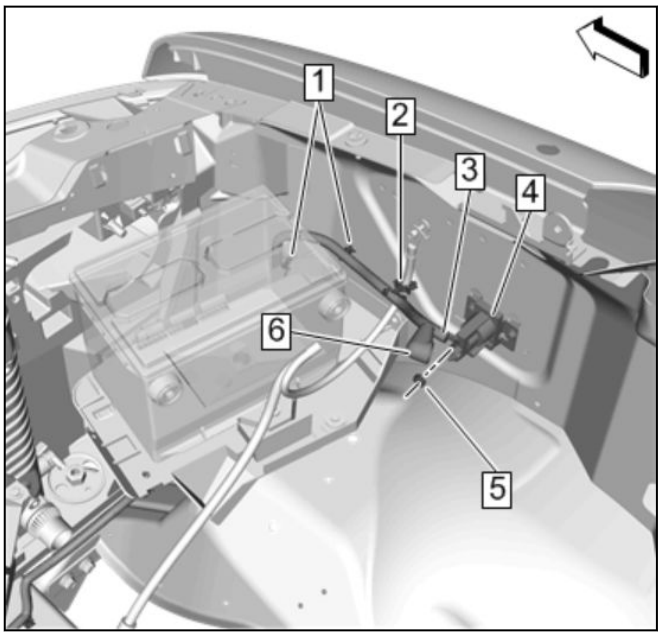

4594263

11. Protective Terminal Boot (6) » Reposition
12. Auxiliary Battery Negative Cable Fastener (5) @ Relay (4) » Remove
13. Retainer (1) » Disengage[2x]
14. Retainer Clip (2) » Disengage
15. Auxiliary Battery Negative Cable (3) » Remove

Installation Procedure

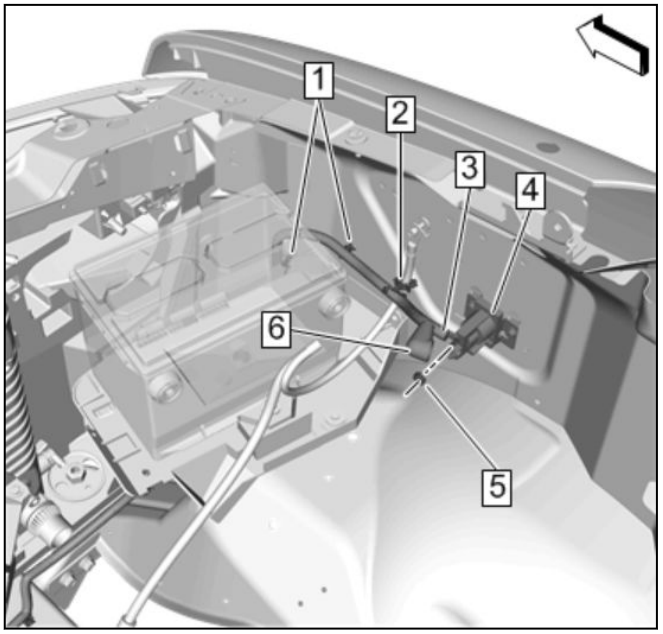

4594263

1. Auxiliary Battery Negative Cable (3) » Install

Caution: Refer to [Link target (target-id 178169-) not found]

2. Auxiliary Battery Negative Cable Fastener (5) @ Relay (4) » Install and tighten**7.5** N•m **(66 lb in)**

3. Retainer (1) » Engage[2x]
4. Retainer Clip (2) » Engage
5. Protective Terminal Boot (6) » Install

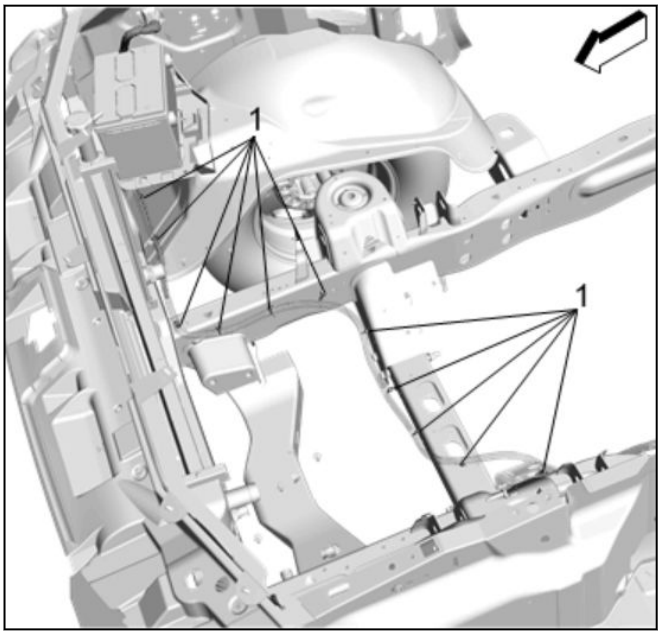

4595847

6. Retainer (1) » Engage[11x]
7. Raise and support the vehicle. [Link target (target-id 47852-) not found]

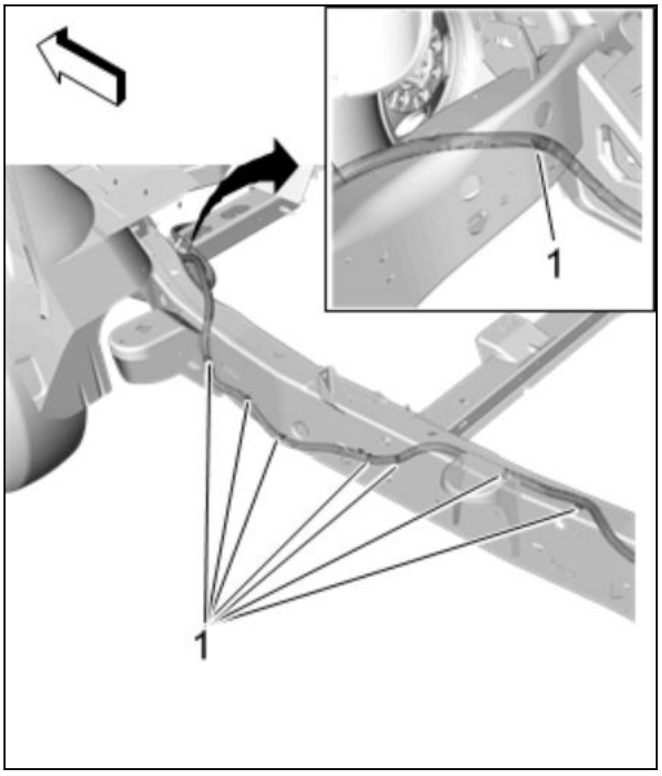

4595712

8. Retainer (2) » Engage[8x]

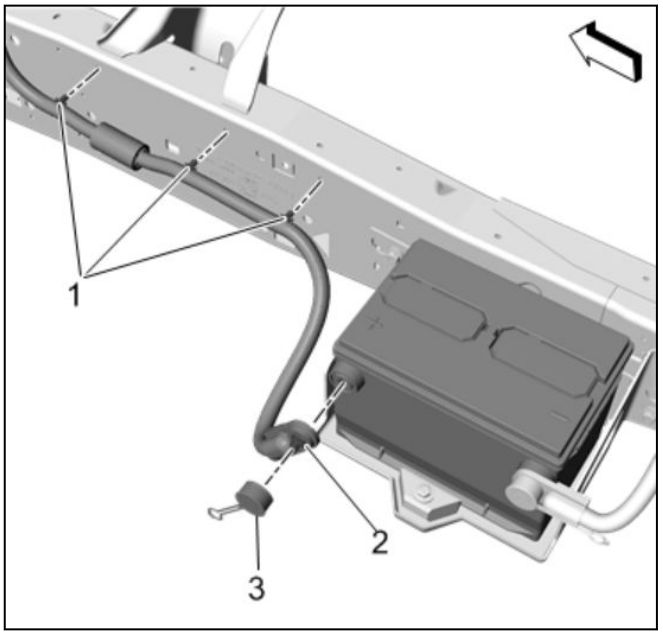

4595711

9. Auxiliary Battery Negative Cable Fastener (2) » Install and tighten**14** N•m **(124 lb in)**
10. Protective Cap (3) » Install
11. Retainer (1) » Engage[3x]
12. Lower the vehicle.
13. Coolant Recovery Reservoir » Install— [Link target (target-id 37161-) not found]
14. Install the battery tray. *Battery Tray Replacement 3-88*
15. Connect the negative battery cable. *Battery Negative Cable Disconnection and Connection 3-8* *Battery Negative Cable Disconnection and Connection 3-9*

Battery Replacement

Removal Procedure

Warning: Batteries produce explosive gases. Batteries contain corrosive acid. Batteries supply levels of electrical current high enough to cause burns. Therefore, in order to reduce the risk of personal injury while working near a battery, observe the following guidelines:

- ***Always shield your eyes.***
- ***Avoid leaning over the battery whenever possible.***
- ***Do not expose the battery to open flames or sparks.***
- ***Do not allow battery acid to contact the eyes or the skin.***
  - ***Flush any contacted areas with water immediately and thoroughly.***
  - ***Get medical help.***

1. { If equipped } Radiator Air Upper Baffle » Remove [Link target (target-id 282108-) not found]

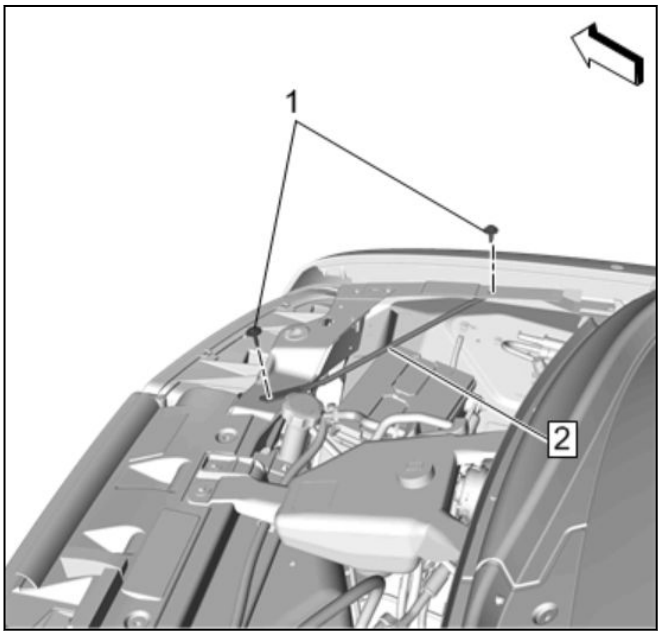

4597509

2. Front End Sheet Metal Diagonal Brace Bolt (1) » Remove[2x]
3. Front End Sheet Metal Diagonal Brace Reinforcement (2) » Remove
4. Disconnect the battery negative cable. *Battery Negative Cable Disconnection and Connection 3-8* *Battery Negative Cable Disconnection and Connection 3-9*

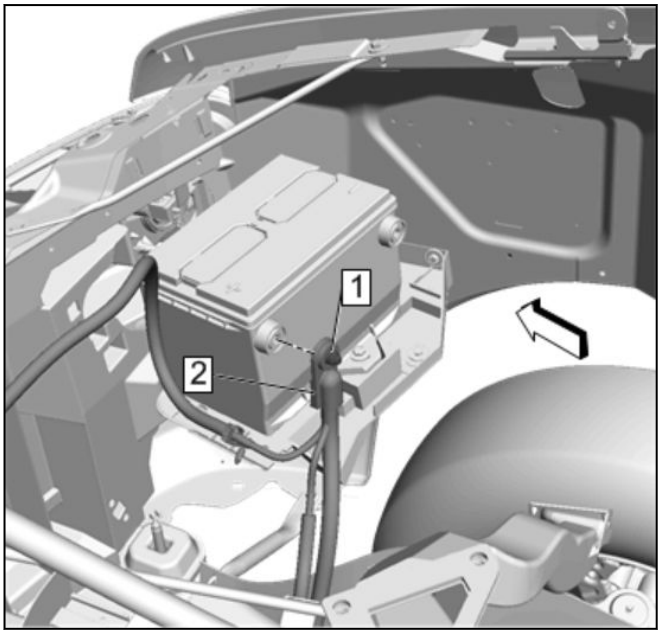

4527822

5. Battery Positive Cable Bolt (1) » Remove
6. Battery Positive Cable (2) » Reposition away

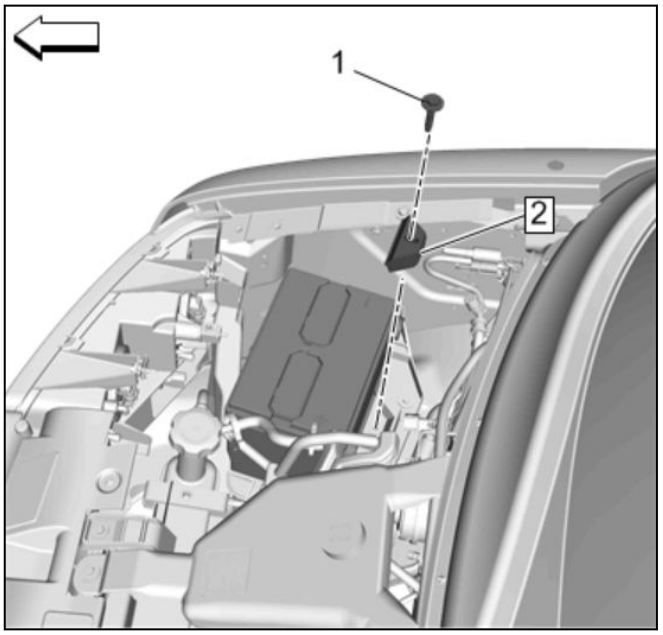

4597450

7. Battery Hold Down Bolt (1) » Remove
8. Battery Hold Down Retainer (2) » Remove

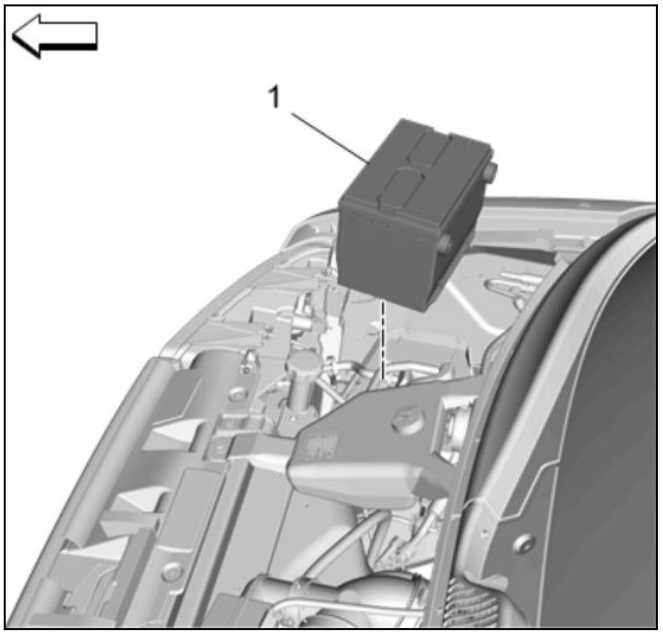

4597456

9. Battery (1) » Remove
10. Clean any corrosion form the battery cables and connectors.
11. Clean the battery tray and remove any foreign objects from the tray.

Installation Procedure

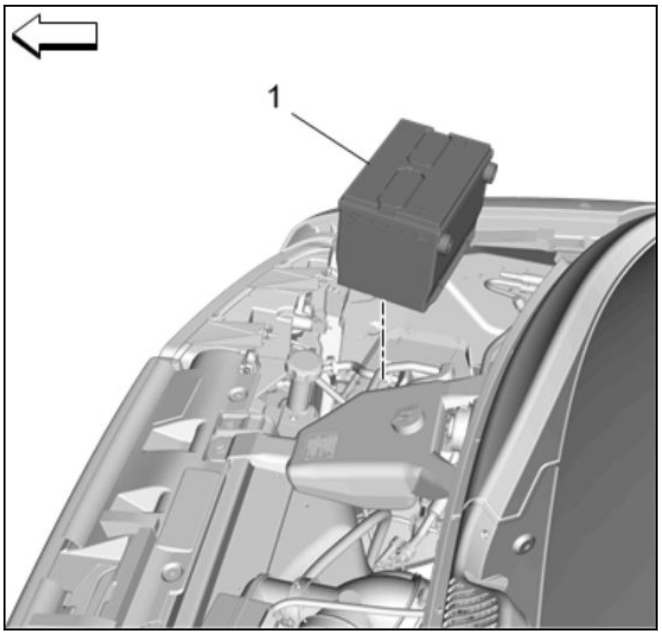

4597456

1. Battery (1) » Install

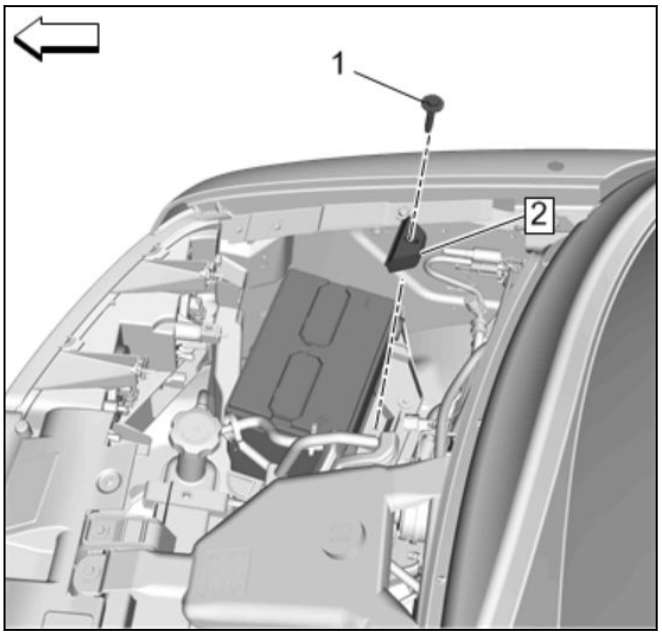

4597450

2. Battery Hold Down Retainer (2) » Install

Caution: Refer to [Link target (target-id 178169-) not found]

3. Battery Hold Down Bolt (1) » Install and tighten**18** N•m **(13 lb ft)**

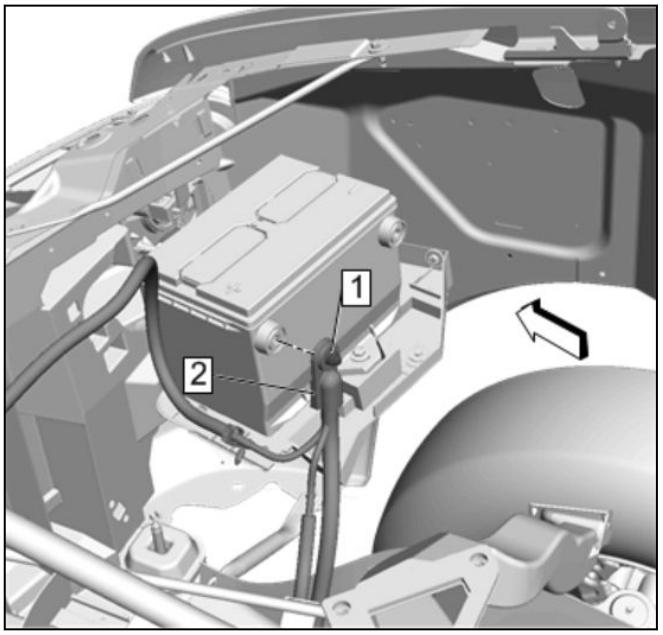

4527822

4. Battery Positive Cable (2) » Install
5. Battery Positive Cable Bolt (1) » Tighten**13** N•m **(115 lb in)**
6. Connect the negative battery cable. *Battery Negative Cable Disconnection and Connection 3-8* *Battery Negative Cable Disconnection and Connection 3-9*

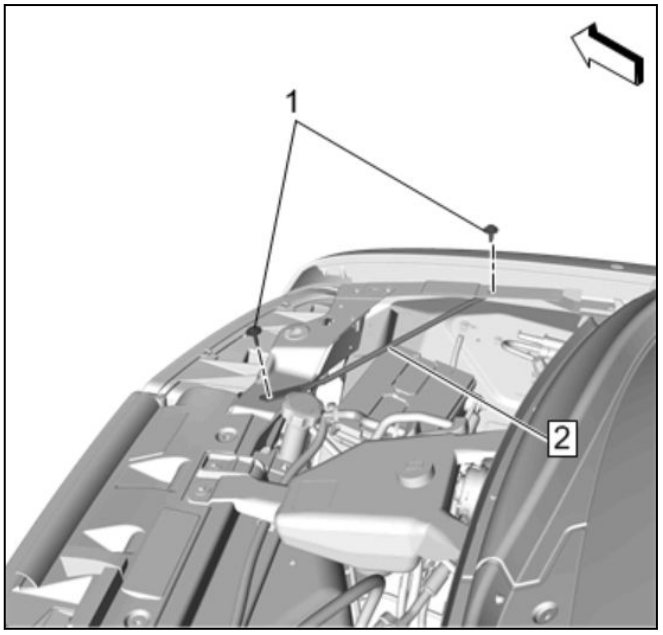

4597509

7. Front End Sheet Metal Diagonal Brace Reinforcement (2) » Install
8. Front End Sheet Metal Diagonal Brace Bolt (1) » Install and tighten[2x] **22** N•m **(16 lb ft)**
9. { If equipped } Radiator Air Upper Baffle » Install [Link target (target-id 282108-) not found]

Battery Tray Replacement

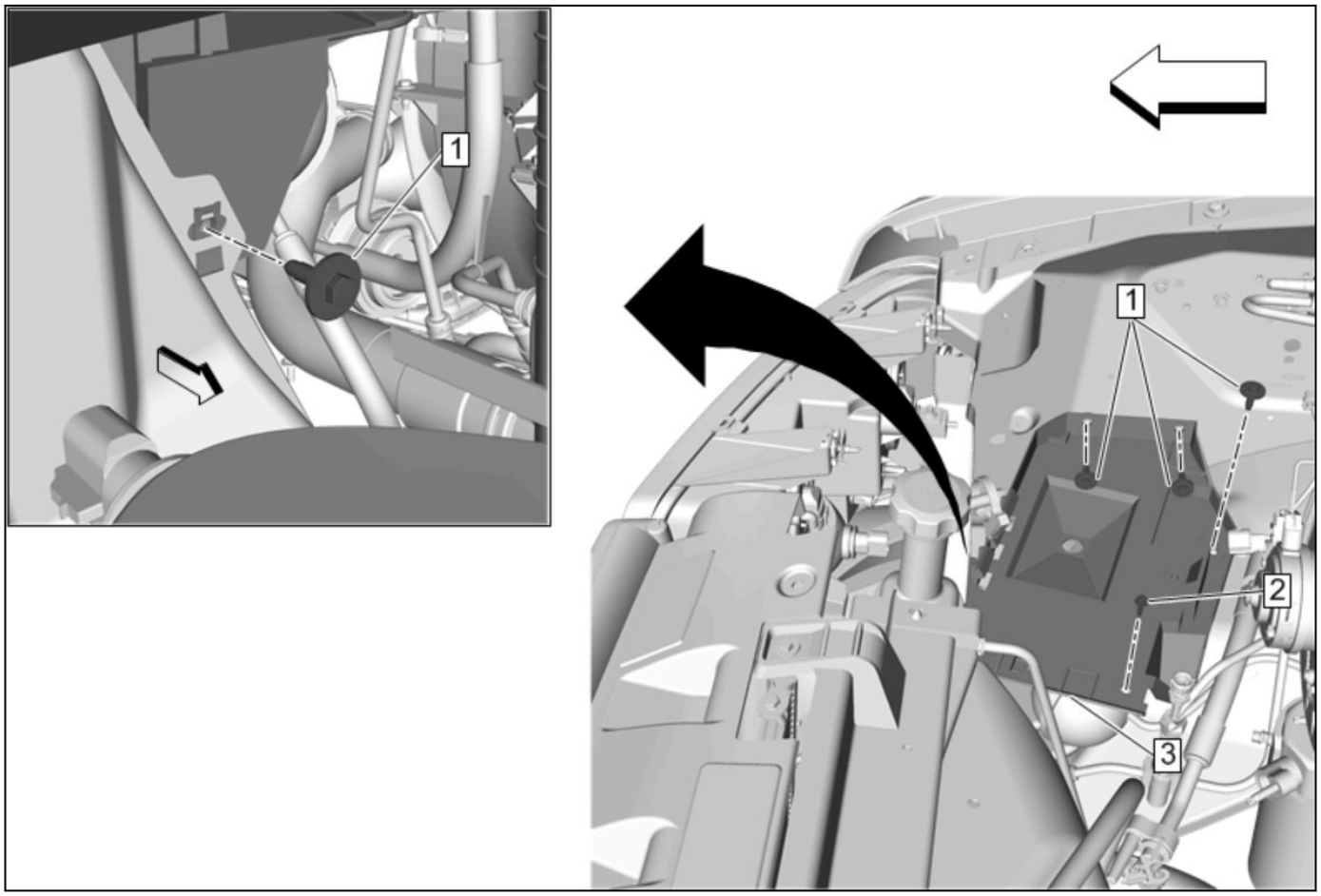

4597862

Battery Tray Replacement

Callout	Component Name
Preliminary Procedures 1. [Link target (target-id 161787-) not found] 2. *Battery Replacement 3-85* 3. Disconnect any harness retainers attached to the battery tray.	
1	Battery Tray Mounting Bolt [4x] **Caution:** Refer to [Link target (target-id 178169-) not found] . **Tighten** 9 N•m (80 lb in)
2	Heater and Air Conditioning Control Vacuum Tank Bolt **Tighten** 3.3 N•m (29 lb in)
3	Battery Tray

Auxiliary Battery and Tray Replacement

Removal Procedure

1. Disconnect the primary and auxiliary battery negative cables. *Battery Negative Cable Disconnection and Connection 3-8* *Battery Negative Cable Disconnection and Connection 3-9*
2. Disconnect the auxiliary battery positive cable. *Auxiliary Battery Positive Cable Replacement (Long Wheelbase) 3-81* *Auxiliary Battery Positive Cable Replacement (Short Wheelbase) 3-83*

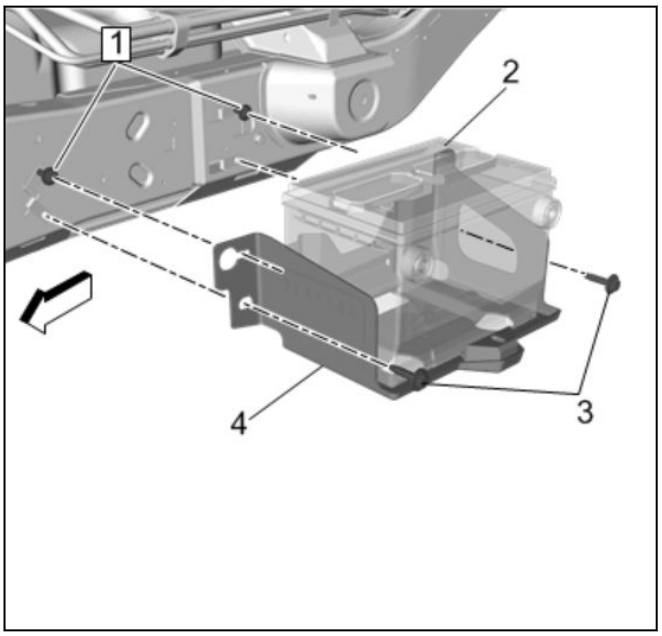

4601225

3. Loosen the upper auxiliary tray mounting bolts (1).
4. Auxiliary Battery Tray Mounting Bolt (3) » Remove[2x]
5. Slide the auxiliary battery tray (4) and the auxiliary battery (2), to the opening in the auxiliary battery tray.
6. Lower the auxiliary battery and tray.

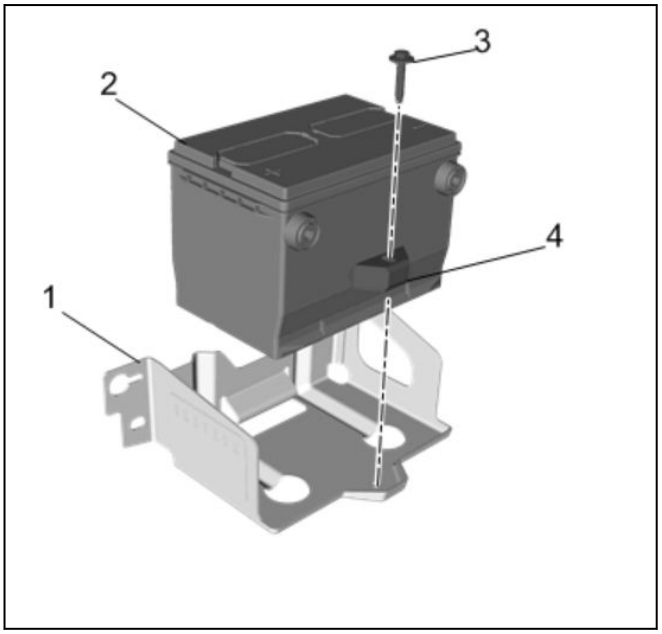

4601226

7. Auxiliary Battery Hold Down Bolt (3) @ Auxiliary Battery Tray (1) » Remove
8. Auxiliary Battery Hold Down Retainer (4) » Remove
9. Auxiliary Battery (2) » Remove

Installation Procedure

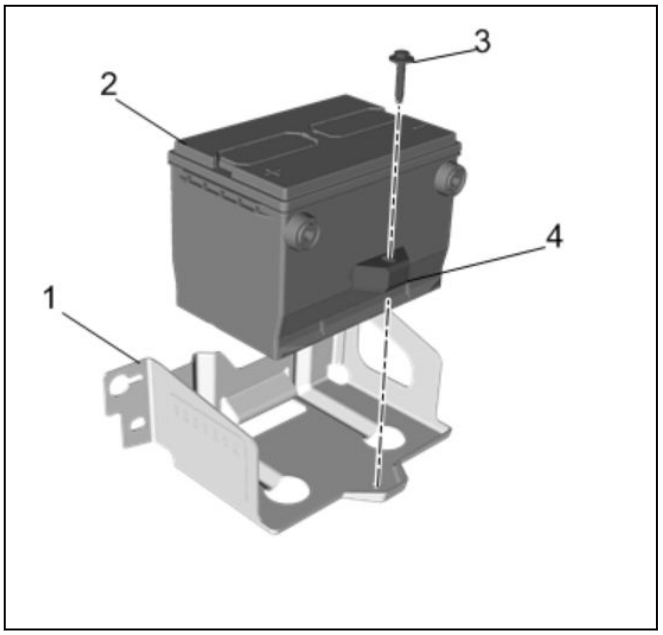

4601226

1. Auxiliary Battery (2) » Install
2. Auxiliary Battery Hold Down Retainer (4) » Install

Caution: Refer to [Link target (target-id 178169-) not found]

3. Auxiliary Battery Hold Down Bolt (3) » Install and tighten**25** N•m **(18 lb ft)**

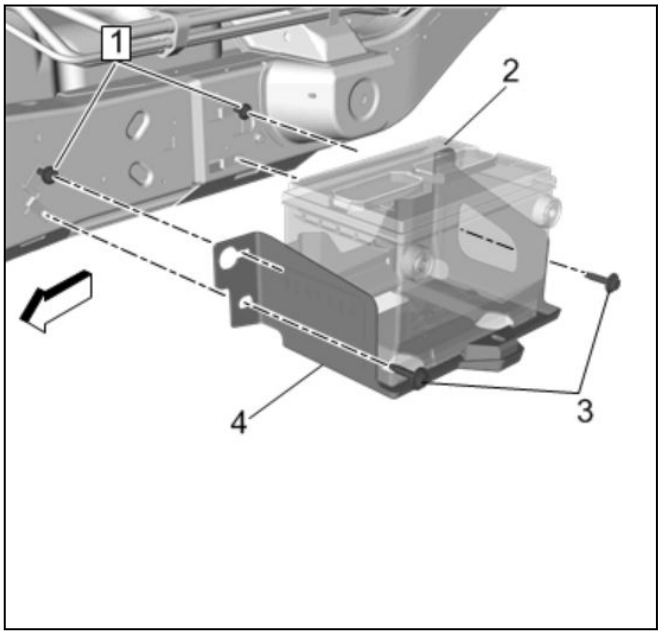

4601225

4. Install the auxiliary battery (2) and the auxiliary battery tray (4), onto the loosened bolts (1) on the frame rail.
5. Auxiliary Battery Tray Mounting Bolt (3) » Install and tighten[2x] **25** N•m **(18 lb ft)**

6. Auxiliary Battery Tray Mounting Bolt (1) » Tighten[2x] **25** N•m **(18 lb ft)**
7. Connect the auxiliary battery positive cable. *Auxiliary Battery Positive Cable Replacement (Long Wheelbase) 3-81* *Auxiliary Battery Positive Cable Replacement (Short Wheelbase) 3-83*
8. Connect the primary and auxiliary battery negative cables. *Battery Negative Cable Disconnection and Connection 3-8* *Battery Negative Cable Disconnection and Connection 3-9*.

Starter Replacement

Removal Procedure

1. Disconnect the battery negative cable. *Battery Negative Cable Disconnection and Connection 3-8* *Battery Negative Cable Disconnection and Connection 3-9*
2. Raise and support the vehicle. [Link target (target-id 47852-) not found]

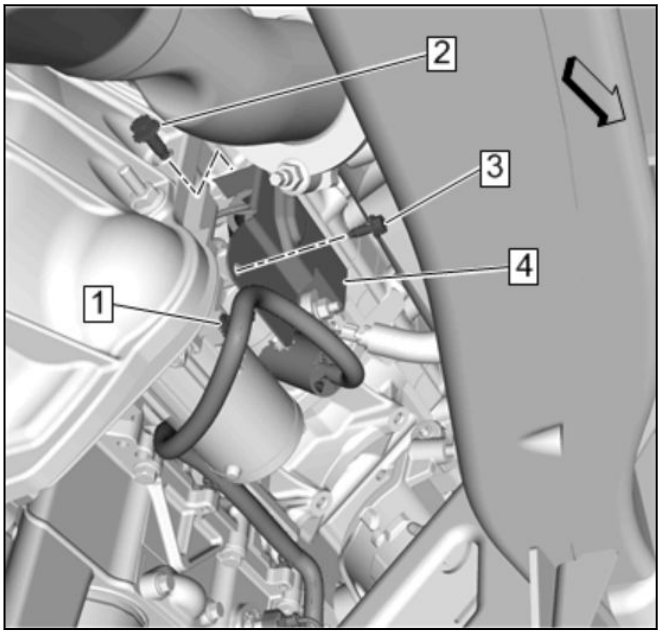

4843649

3. Starter Heat Shield (4) » Remove— *Starter Shield Replacement 3-100*

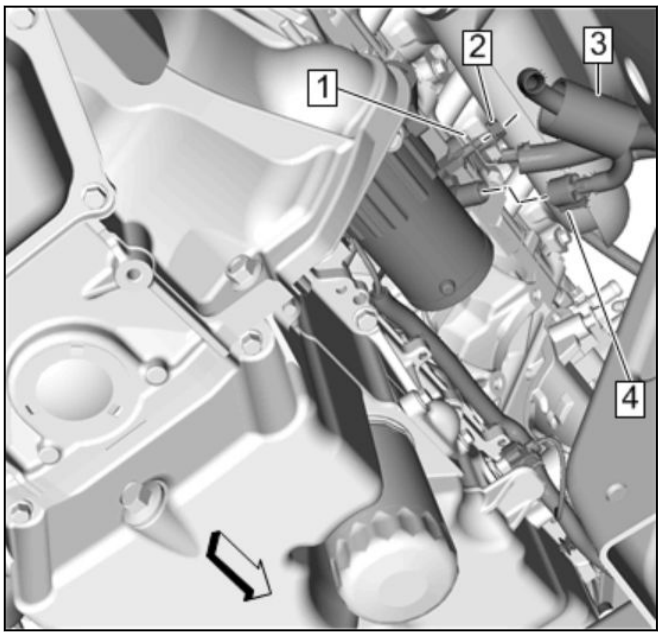

4843872

4. Protective Sleeve (3) » Reposition
5. Electrical Connector (4) @ Starter Solenoid » Disconnect
6. Battery Positive Cable Nut (2) » Remove
7. Battery Positive Cable (1) » Remove

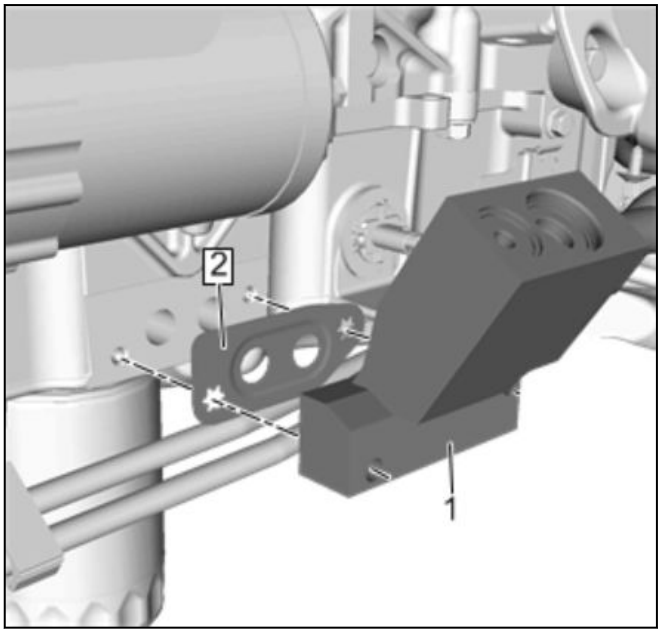

4858426

8. Engine Oil Cooler Pipe (1) » Reposition— [Link target (target-id 183962-) not found]

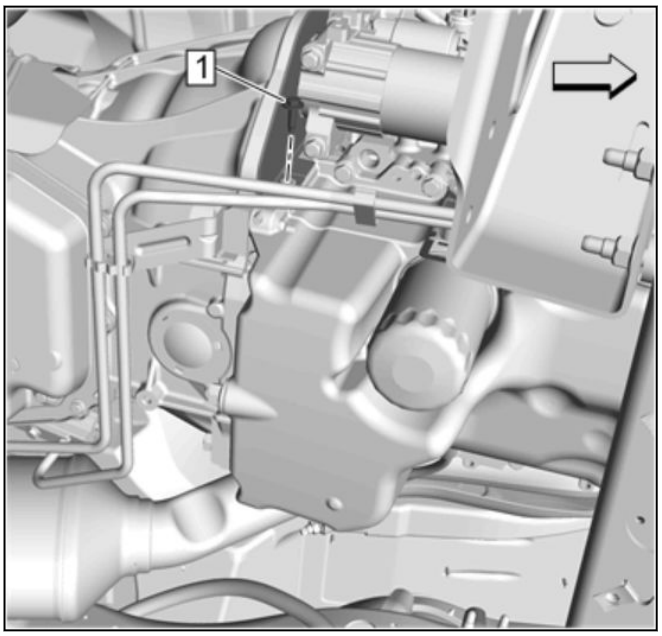

5106440

9. Transmission Converter Cover Bolt (1) » Remove

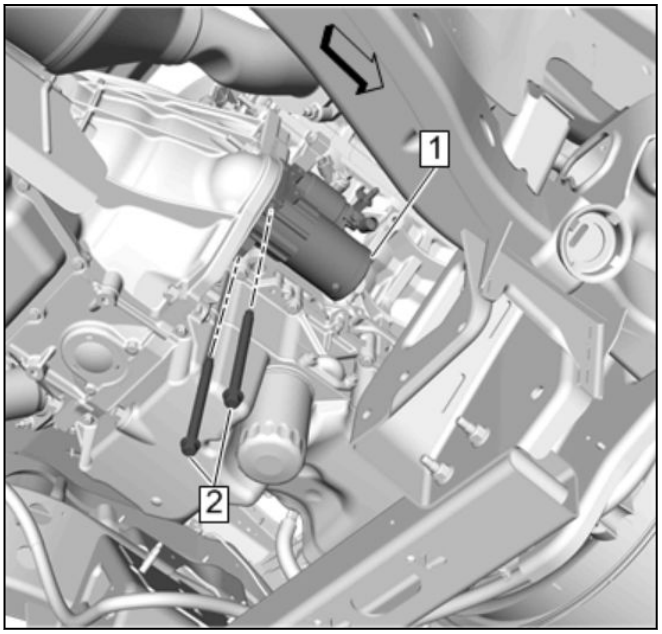

4843873

10. Starter Mounting Bolt (2) » Remove[2x]
11. Remove the starter (1) with the right side flywheel inspection cover.

Installation Procedure

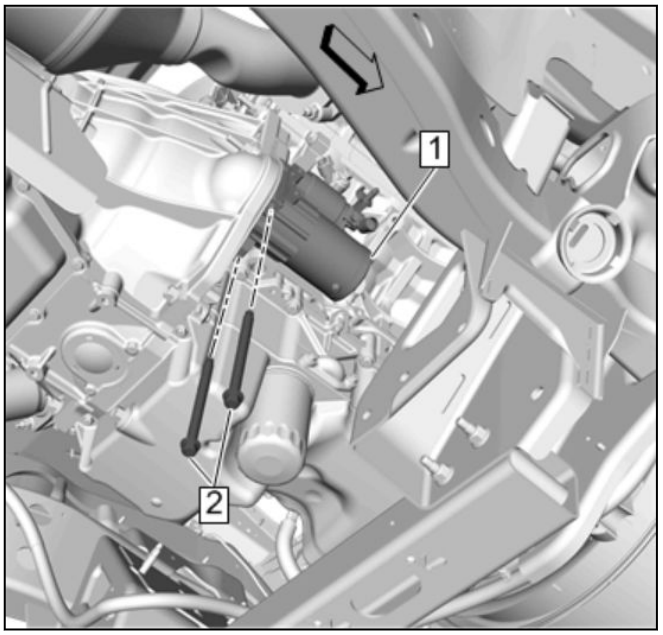

4843873

1. Install the starter (1) with the right side flywheel inspection cover.

Caution: Refer to [Link target (target-id 178169-) not found]

2. Starter Mounting Bolt (2) » Install and tighten[2x] **50** N•m **(37 lb ft)**

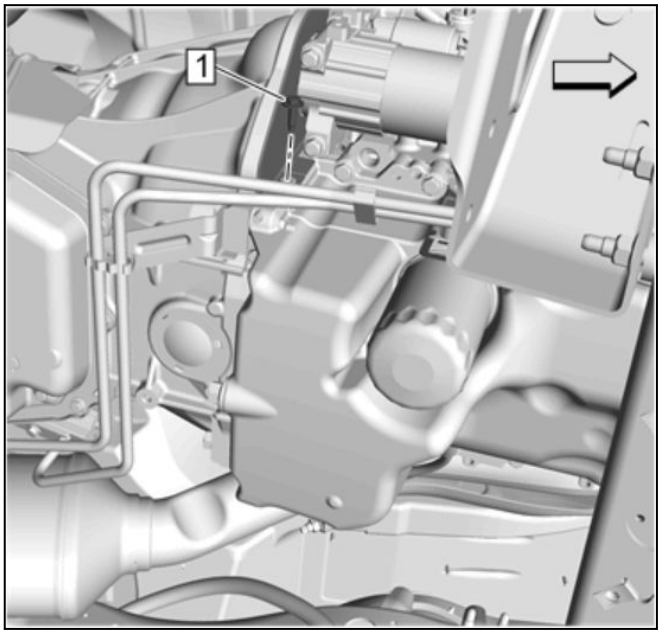

5106440

3. Transmission Converter Cover Bolt (1) » Install and tighten**9** N•m **(80 lb in)**

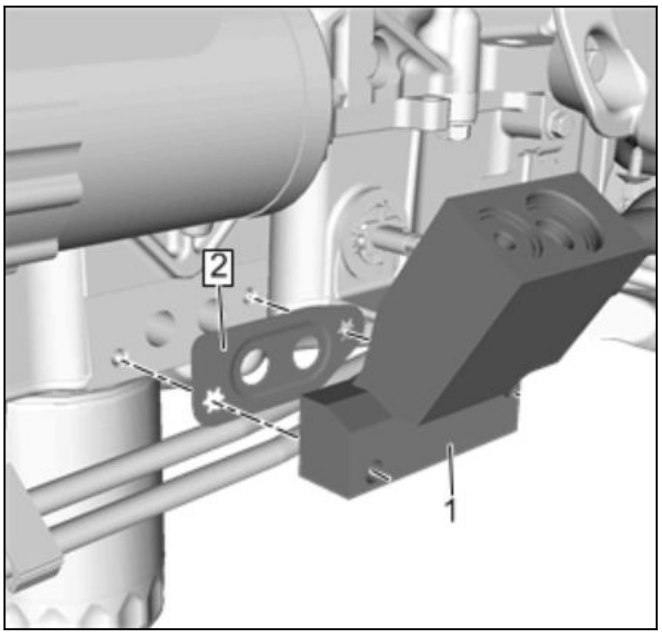

4858426

4. Engine Oil Cooler Pipe (1) » Install— [Link target (target-id 183962-) not found]

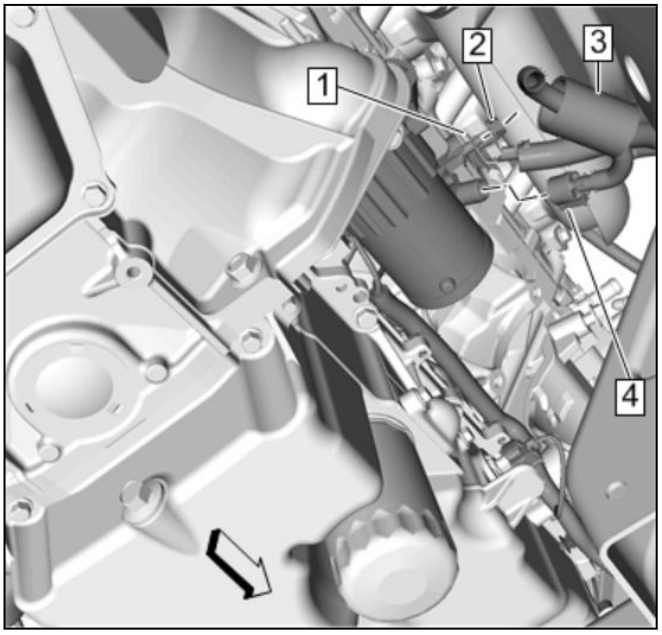

4843872

5. Battery Positive Cable (1) » Install
6. Battery Positive Cable Nut (2) » Install and tighten**14** N•m **(124 lb in)**
7. Electrical Connector (4) @ Starter Solenoid » Connect
8. Protective Sleeve (3) » Reposition

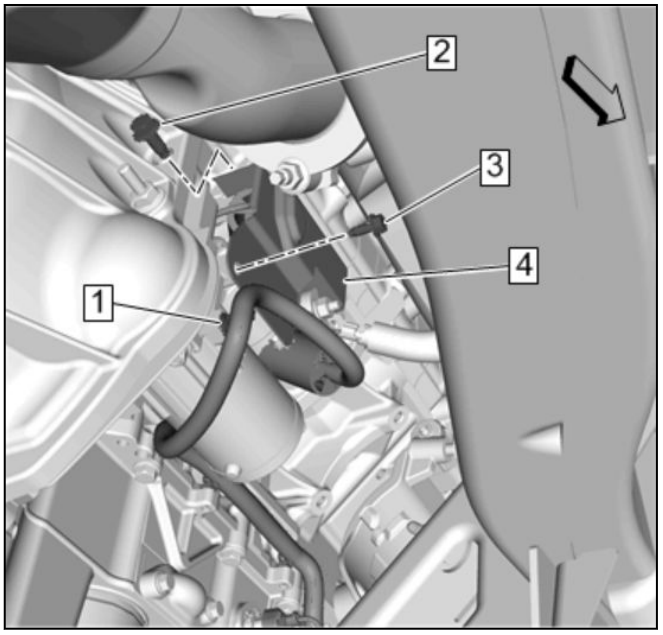

4843649

9. Starter Heat Shield (4) » Install— *Starter Shield Replacement 3-100*
10. Lower the vehicle.
11. Connect the negative battery cable. *Battery Negative Cable Disconnection and Connection 3-8* *Battery Negative Cable Disconnection and Connection 3-9*

Starter Replacement

Removal Procedure

1. Disconnect the battery negative cable. *Battery Negative Cable Disconnection and Connection 3-8* *Battery Negative Cable Disconnection and Connection 3-9*
2. Raise and support the vehicle. [Link target (target-id 47852-) not found]

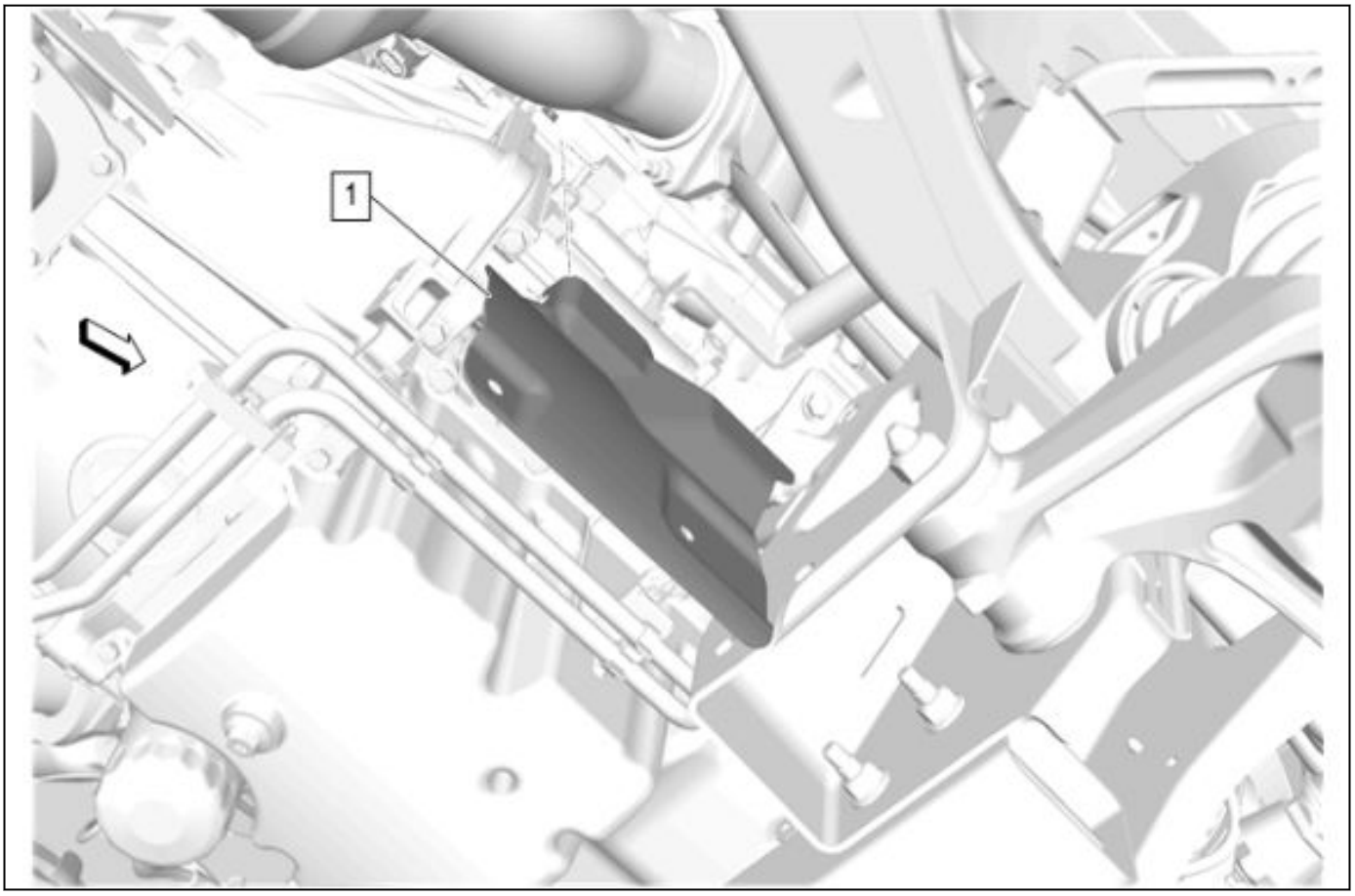

5661974

3. Starter Heat Shield (1) » Remove— *Starter Heat Shield Replacement 3-101*

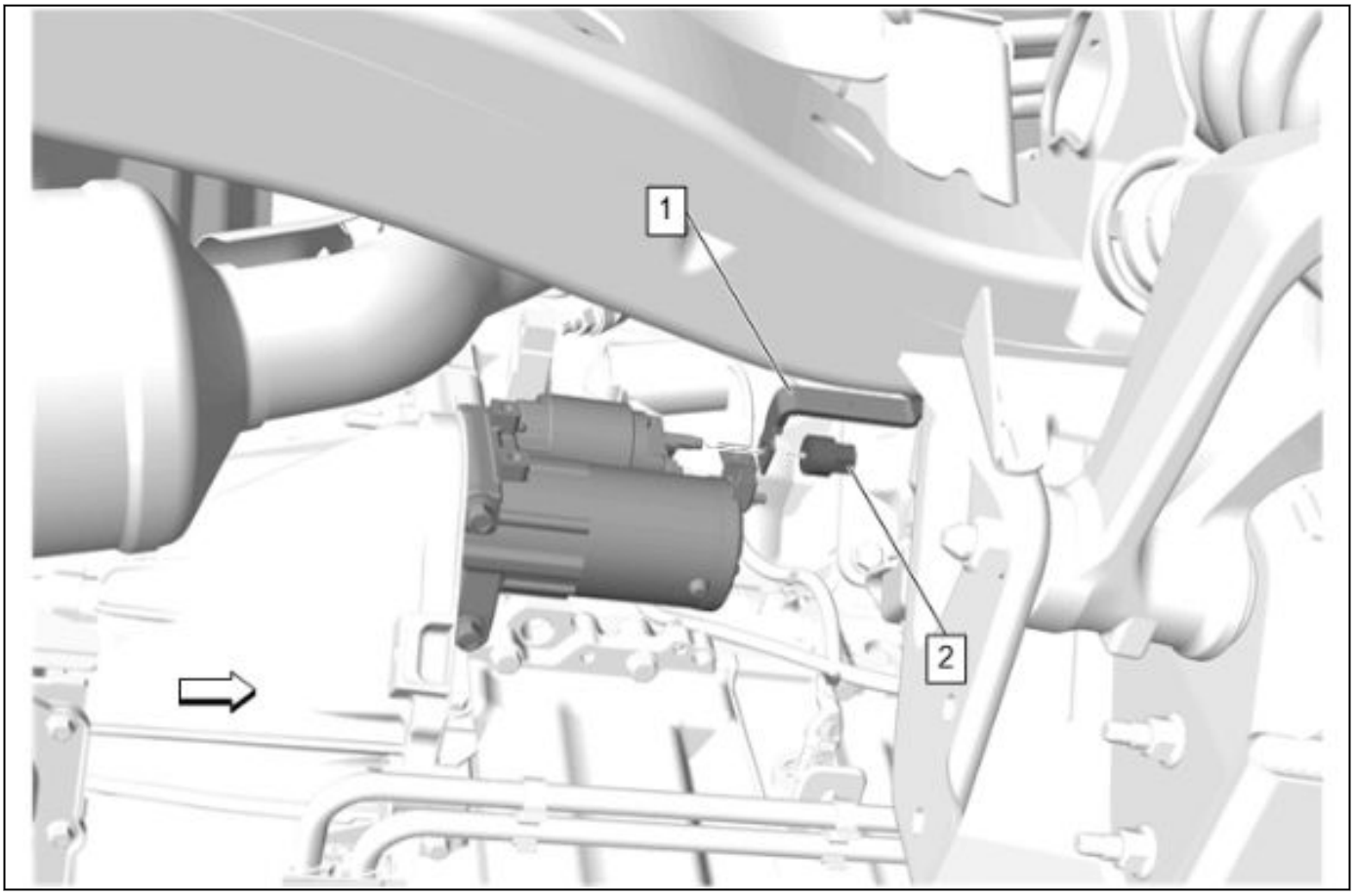

5661982

4. Battery Positive Cable Nut (2) » Remove
5. Battery Positive Cable (1) » Remove

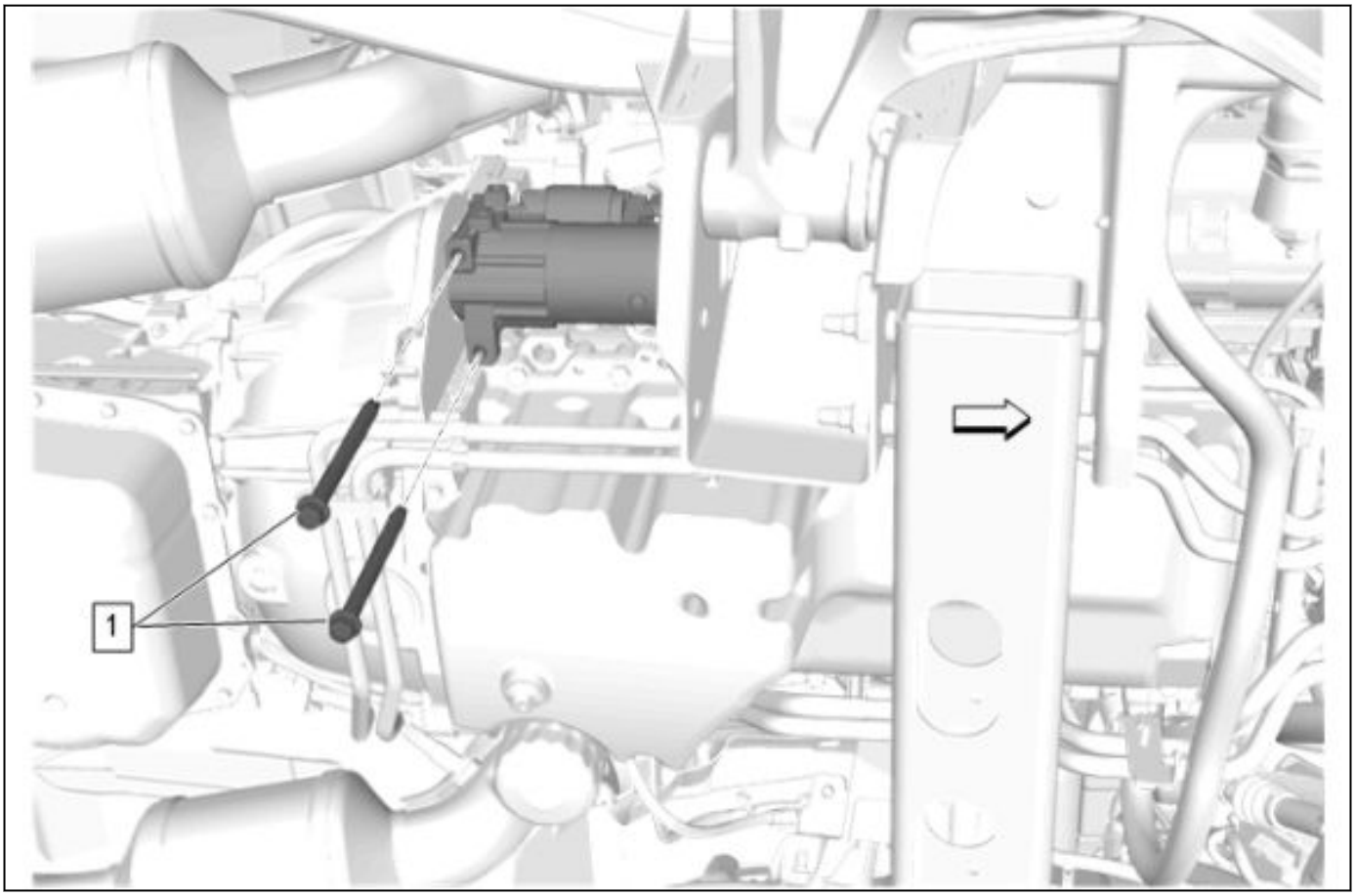

5661979

6. Starter Bolt (1) » Remove[2x]

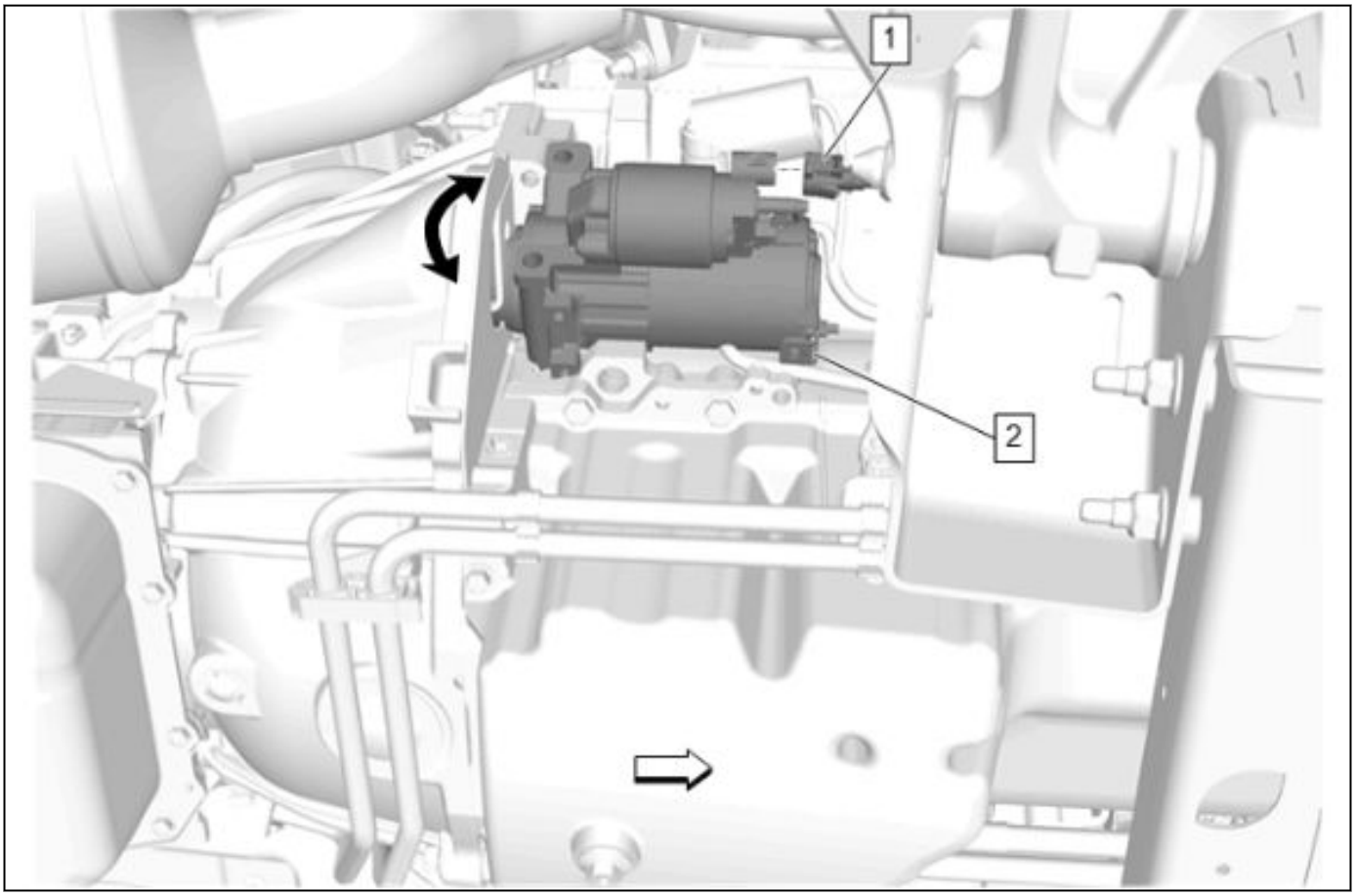

5661991

7. Rotate the starter (2) and disconnect the electrical connector (1).
8. Starter (2) » Remove

Installation Procedure

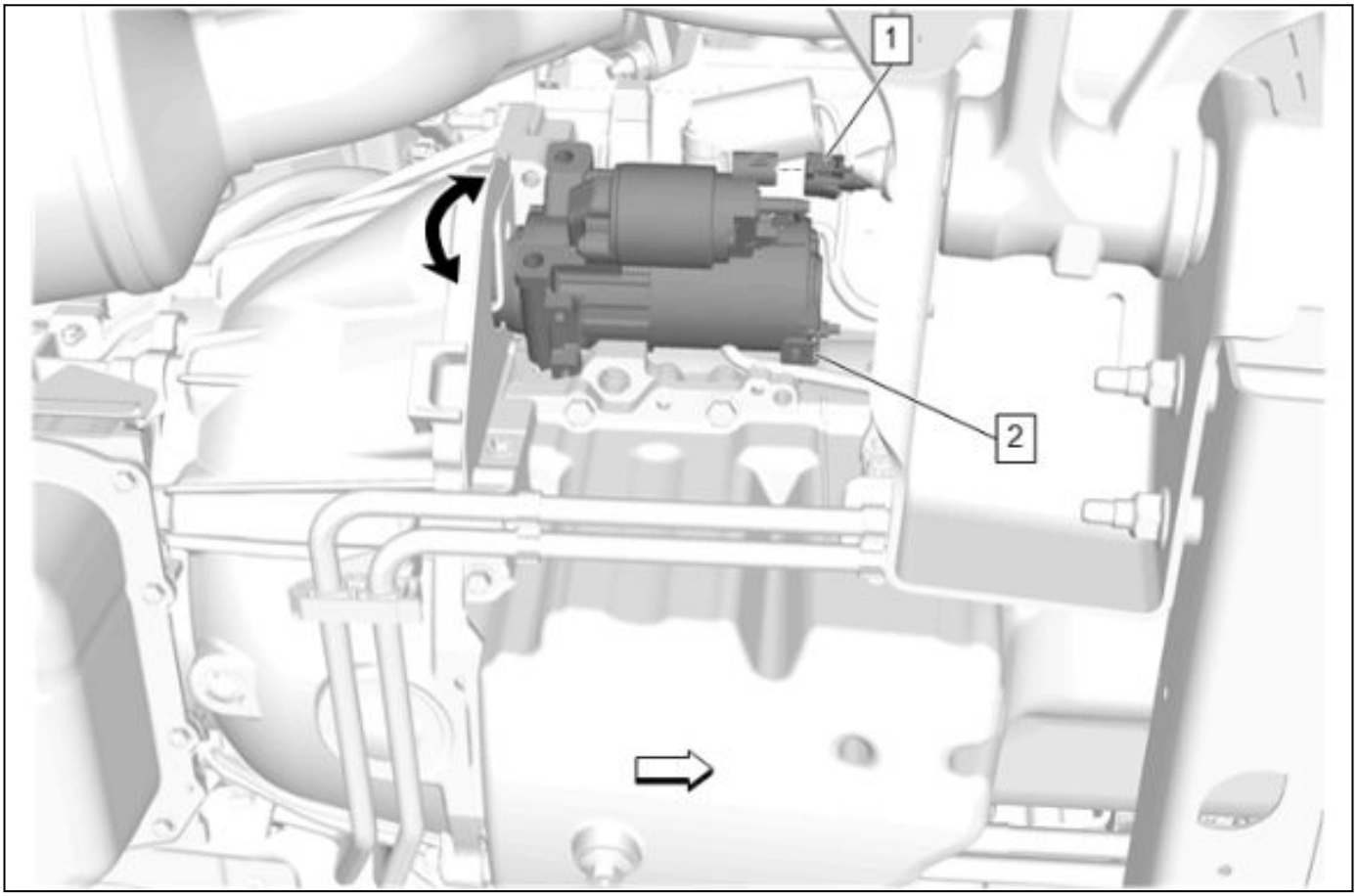

5661991

1. Electrical Connector (1) » Connect
2. Starter (2) » Install

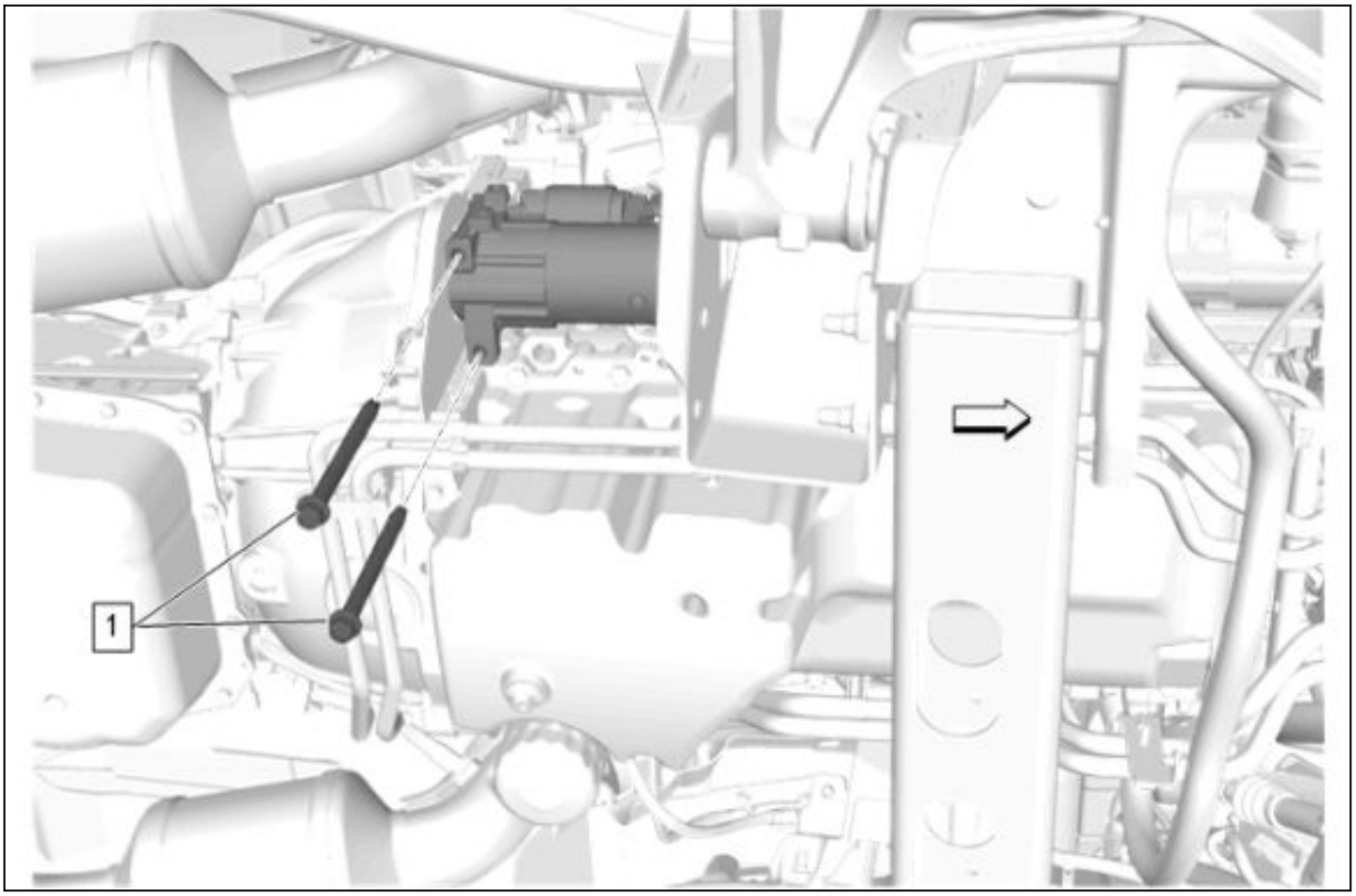

5661979

Caution: Refer to [Link target (target-id 178169-) not found]

3. Starter Bolt (1) » Install and tighten[2x] **50** N•m **(37 lb ft)**

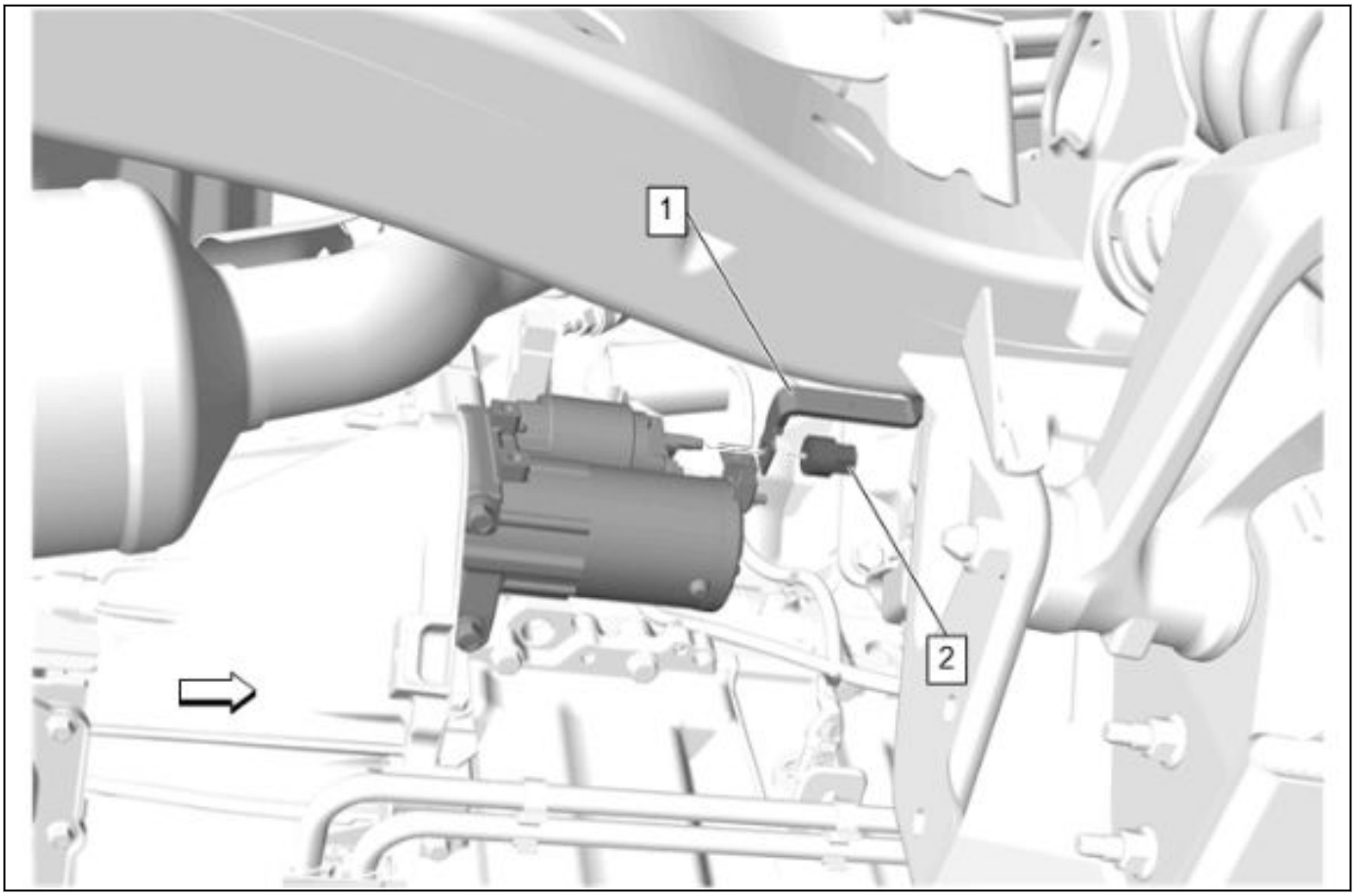

5661982

4. Battery Positive Cable (1) » Install
5. Battery Positive Cable Nut (2) » Install and tighten**14** N•m **(124 lb in)**

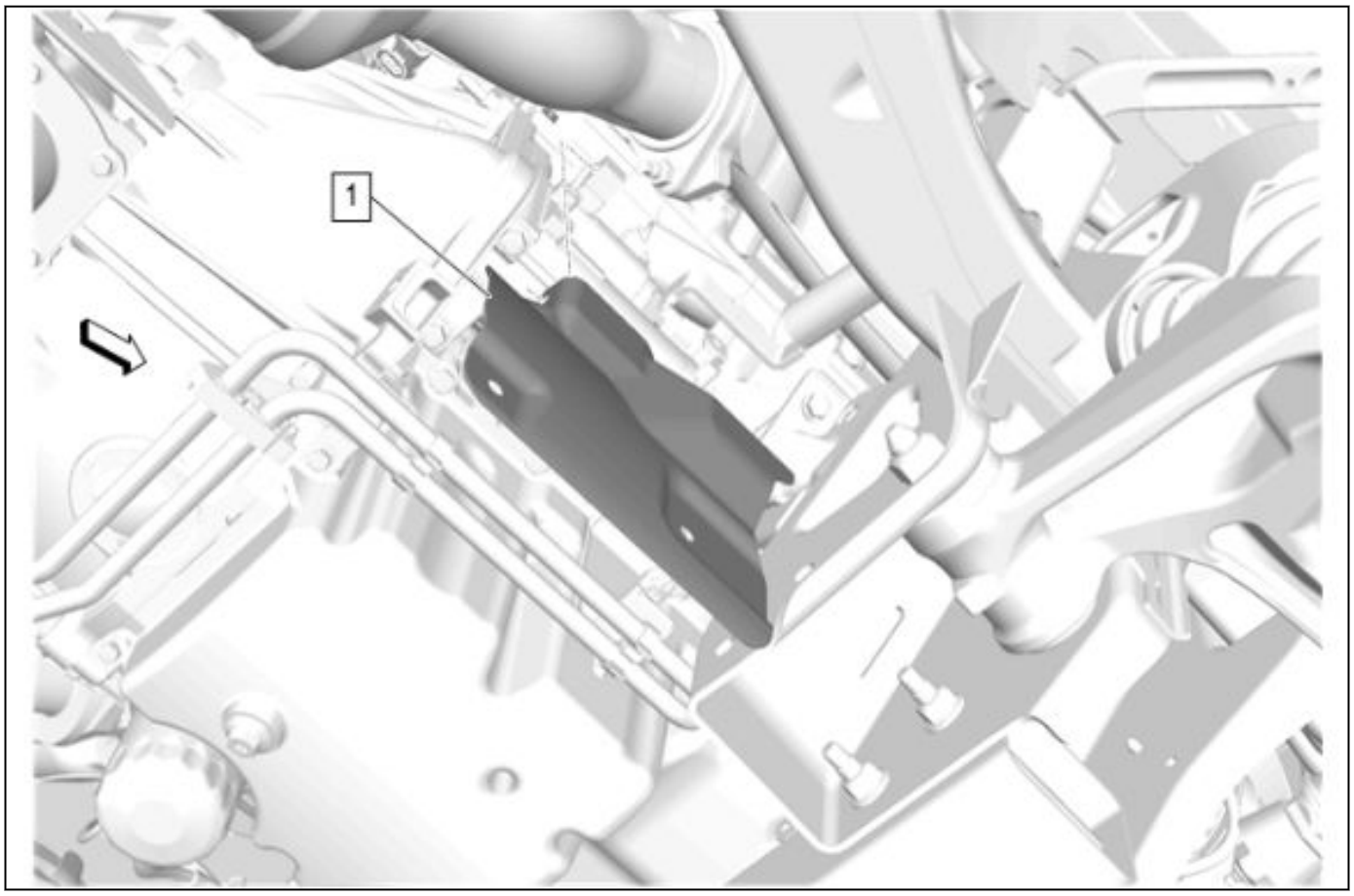

5661974

6. Starter Heat Shield (1) » Install— *Starter Heat Shield Replacement 3-101*
7. Lower the vehicle.
8. Connect the negative battery cable. *Battery Negative Cable Disconnection and Connection 3-8* *Battery Negative Cable Disconnection and Connection 3-9*

Starter Shield Replacement

Removal Procedure

1. Raise and support the vehicle. [Link target (target-id 47852-) not found] .

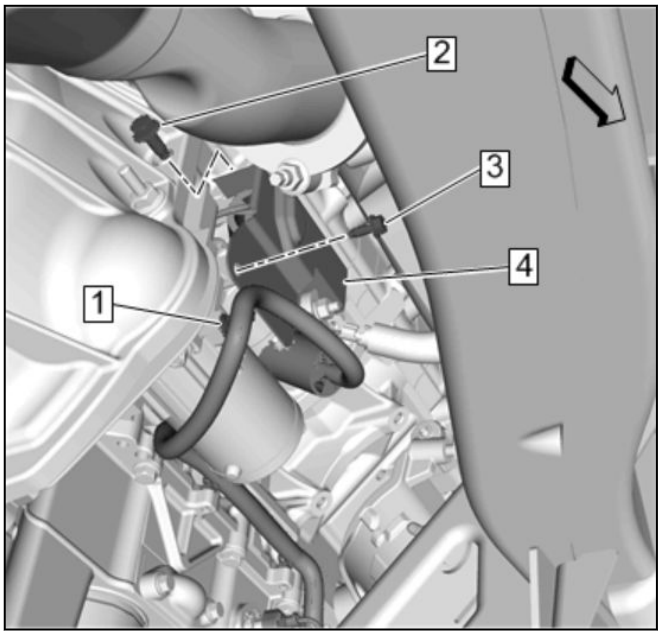

4843649

2. Retainer (1) » Disengage
3. Starter Heat Shield Fastener (2) » Remove
4. Starter Heat Shield Fastener (3) » Remove
5. Starter Heat Shield (4) » Remove

Installation Procedure

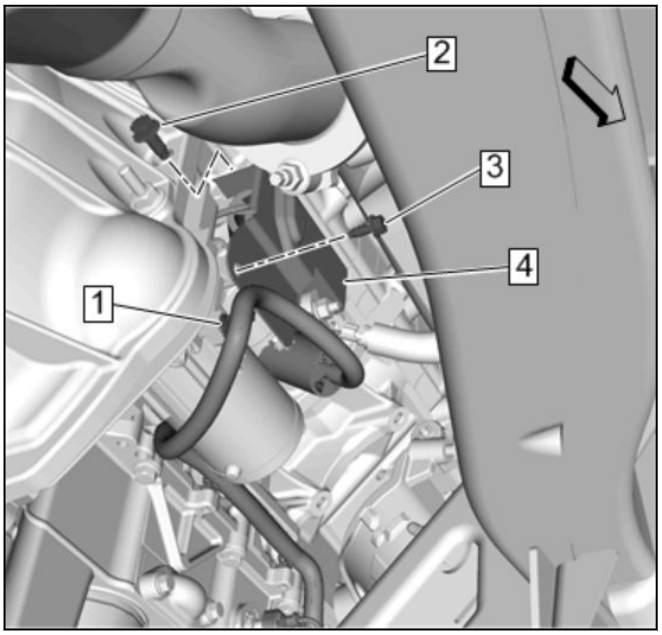

4843649

1. Starter Heat Shield (4) » Install

Caution: Refer to [Link target (target-id 178169-) not found] .

2. Starter Heat Shield Fastener (2) » Install and tighten**22** N•m **(16 lb ft)**
3. Starter Heat Shield Fastener (3) » Install and tighten**9** N•m **(80 lb in)**
4. Retainer (1) » Engage
5. Lower the vehicle.

Starter Heat Shield Replacement

Removal Procedure

1. Raise and support the vehicle. [Link target (target-id 47852-) not found] .

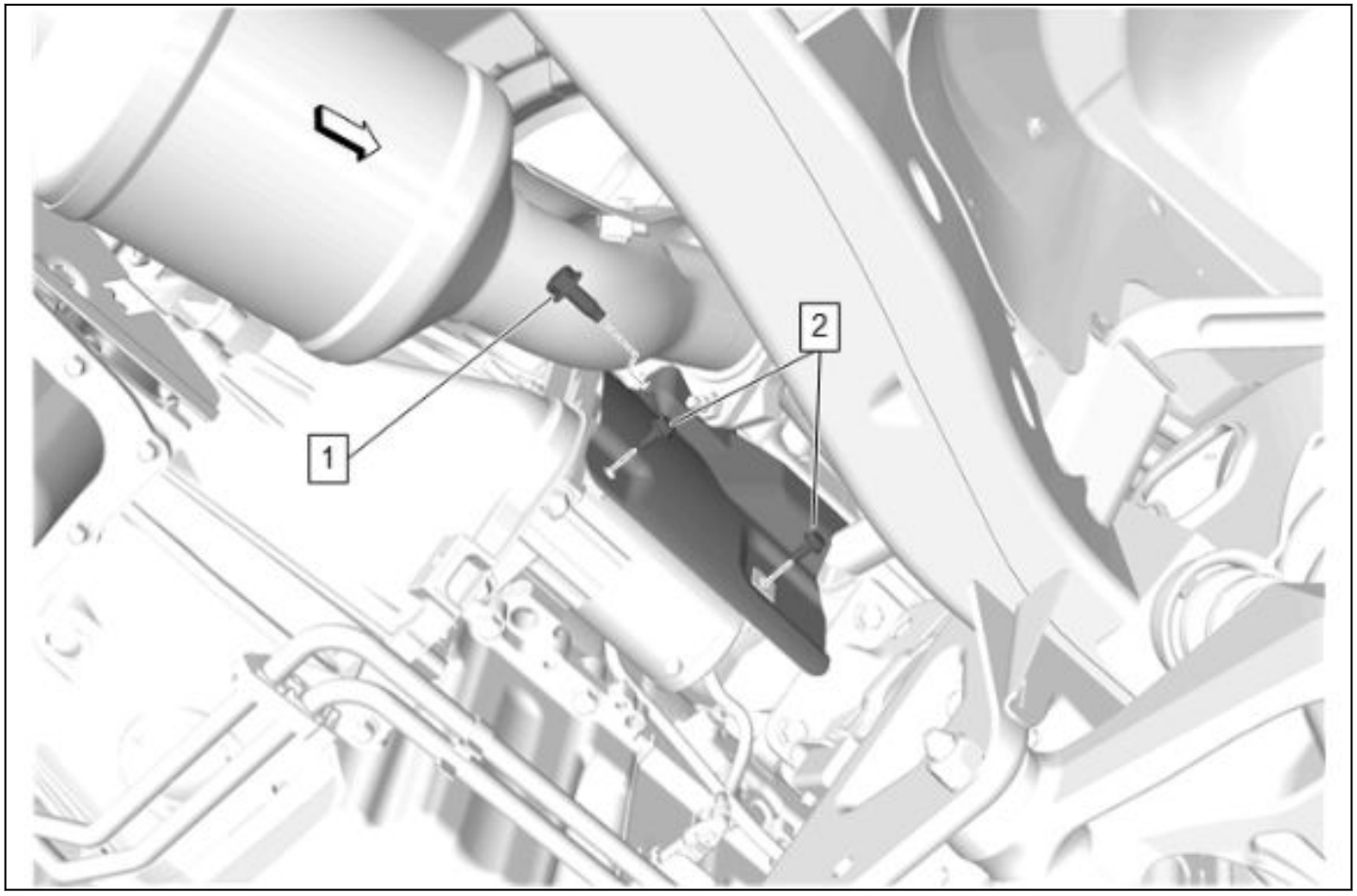

5661973

2. Starter Heat Shield Bolt (1) » Remove
3. Starter Heat Shield Bolt (2) » Remove[2x]

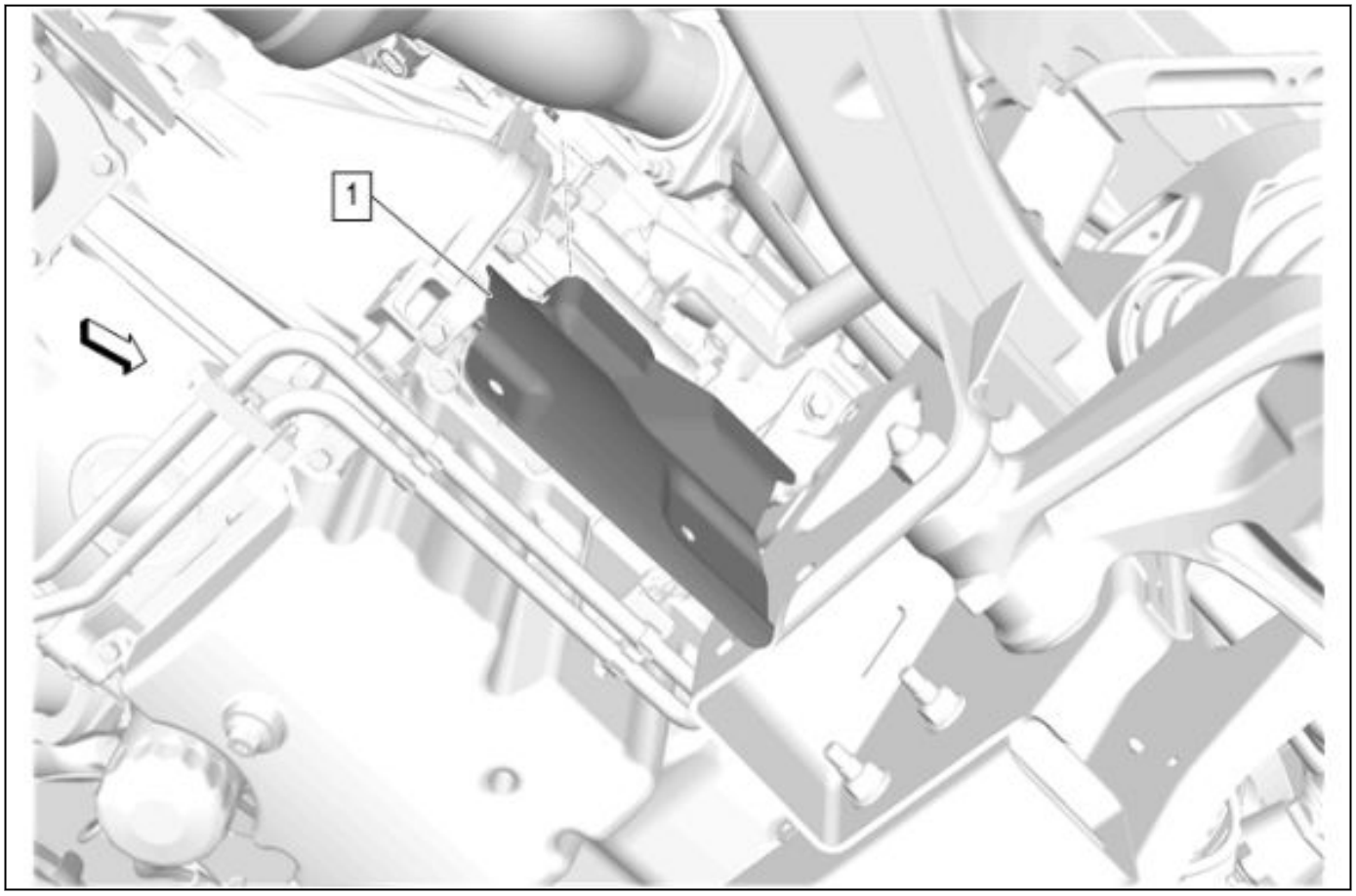

5661974

4. Starter Heat Shield (1) » Remove

Installation Procedure

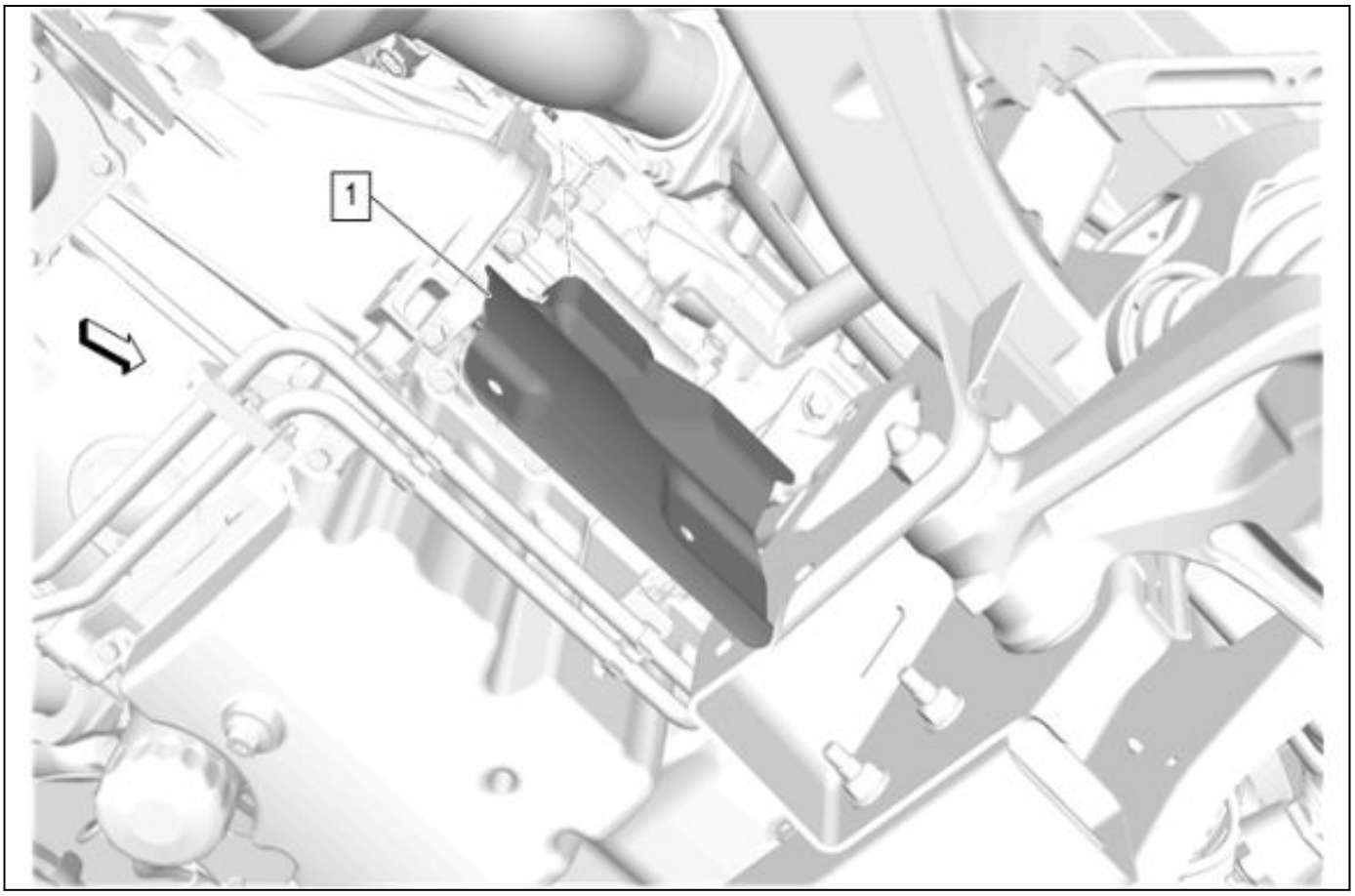

5661974

1. Starter Heat Shield (1) » Install

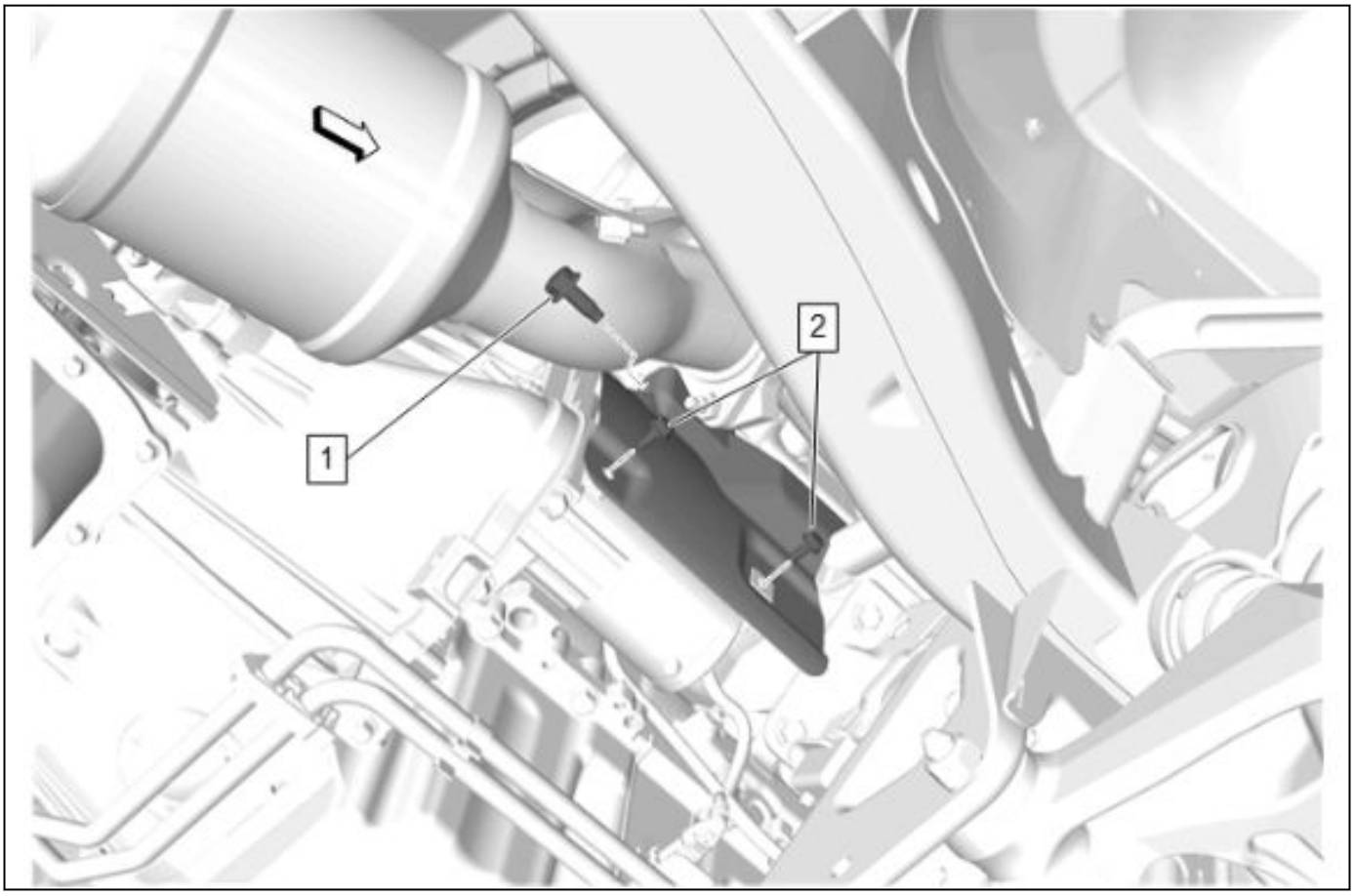

5661973

Caution: Refer to [Link target (target-id 178169-) not found] .

2. Starter Heat Shield Bolt (1) » Install and tighten**22** N•m **(16 lb ft)**
3. Starter Heat Shield Bolt (2) » Install and tighten[2x] **9** N•m **(80 lb in)**
4. Lower the vehicle.

Generator Replacement

Removal Procedure

1. Disconnect the negative battery cable. *Battery Negative Cable Disconnection and Connection 3-8* *Battery Negative Cable Disconnection and Connection 3-9*

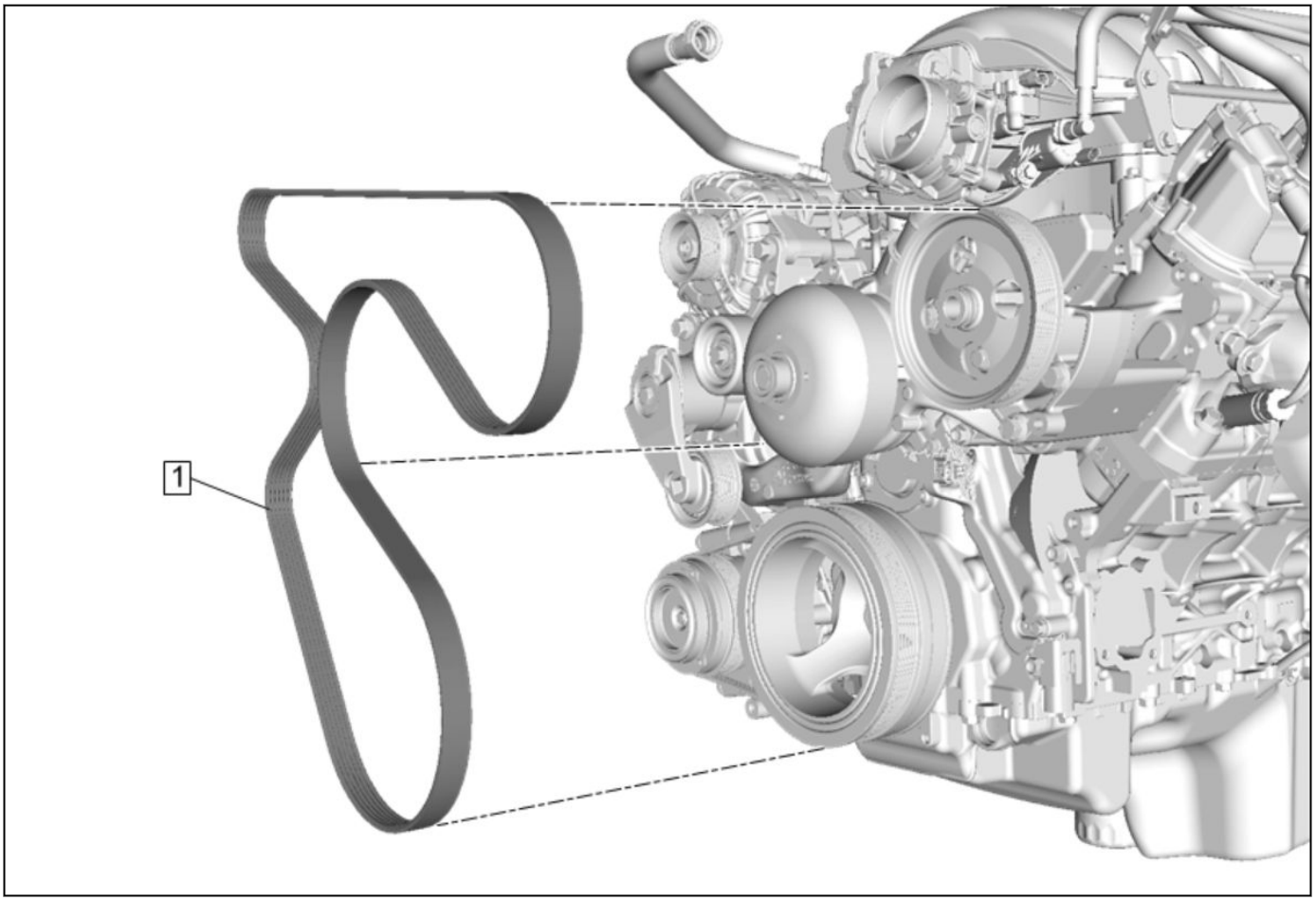

4845476

2. Remove the accessory drive belt (1) from the generator pulley only. [Link target (target-id 332344-) not found]

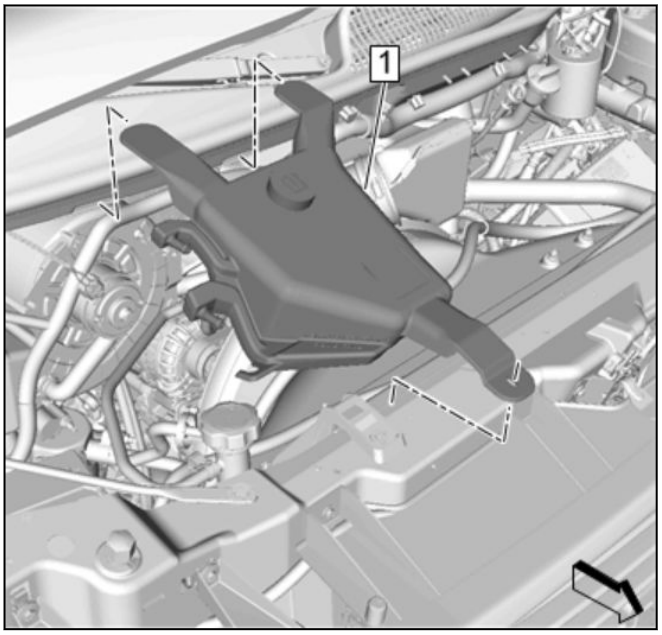

4840951

3. Coolant Recovery Reservoir (1) » Remove— [Link target (target-id 37161-) not found]

4854159

4. Remove the engine cover. (1) [Link target (target-id 51637-) not found]

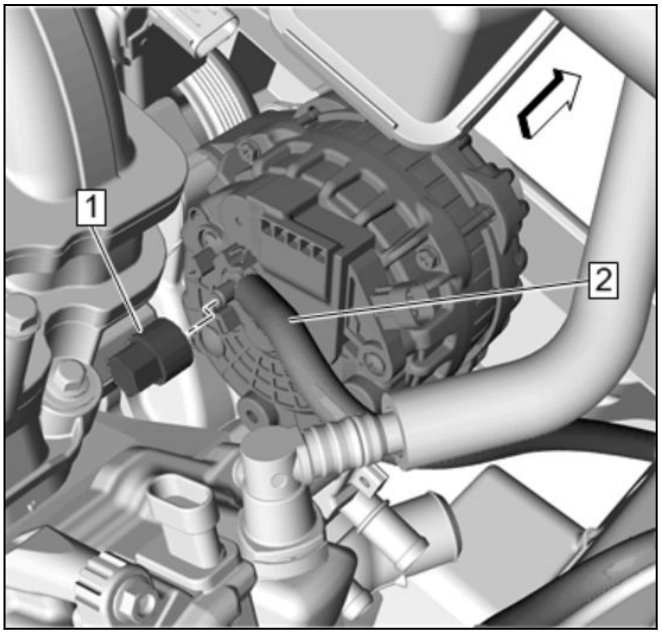

4842498

5. Battery Positive Cable Nut (1) » Remove
6. Battery Positive Cable (2) » Remove

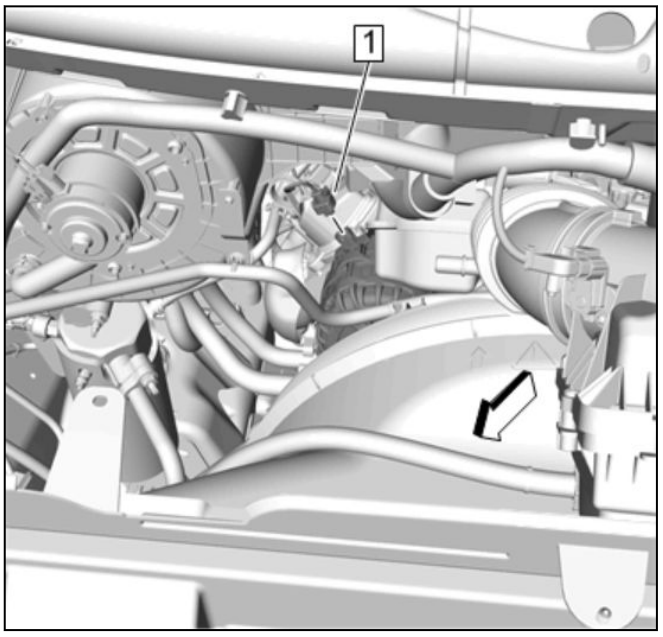

4845303

7. Electrical Connector (1) » Disconnect

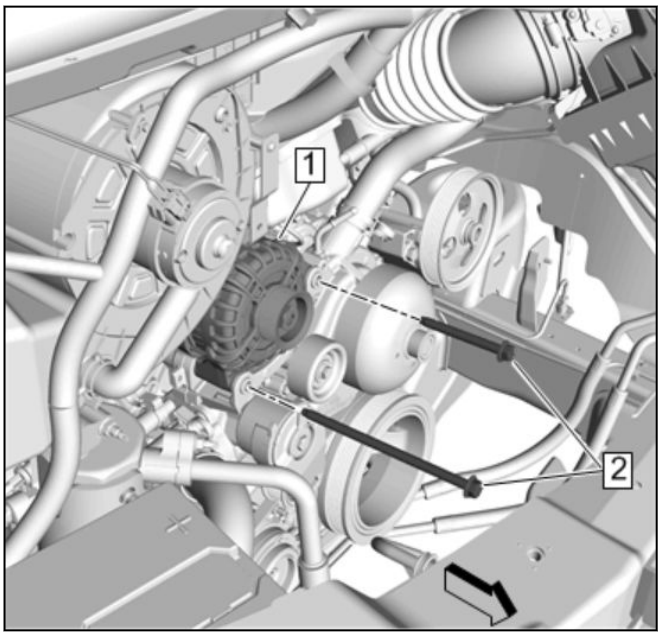

4845304

Note: Radiator shroud is removed for graphic clarity.

8. Generator Mounting Bolt (2) » Remove[2x]
9. Generator (1) » Remove

Installation Procedure

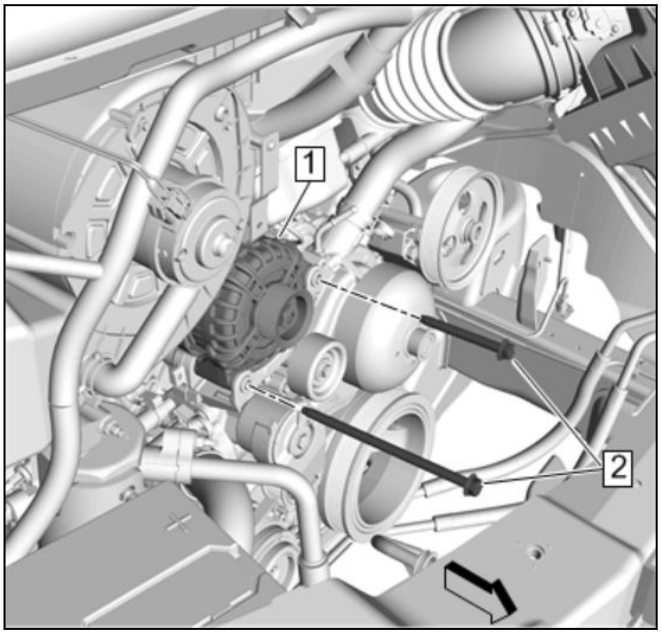

4845304

1. Generator (1) » Install

Caution: Refer to [Link target (target-id 178169-) not found]

2. Generator Mounting Bolt (2) » Install and tighten[2x] **58** N•m **(43 lb ft)**

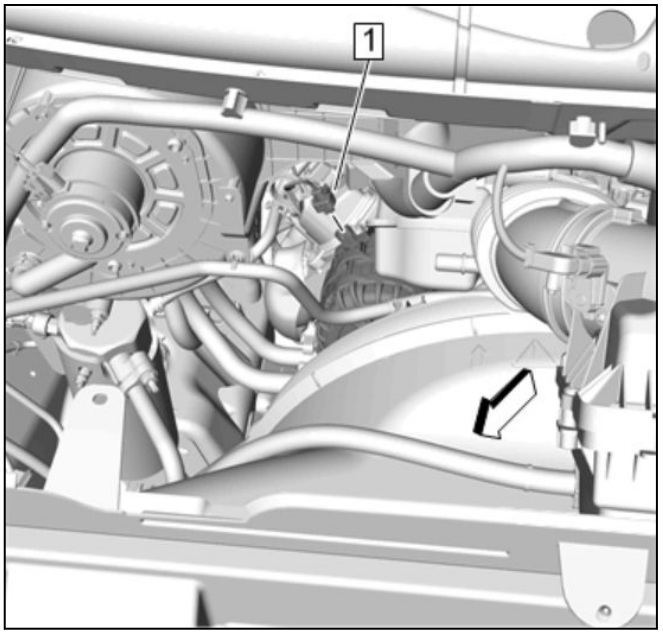

4845303

3. Electrical Connector (1) » Connect

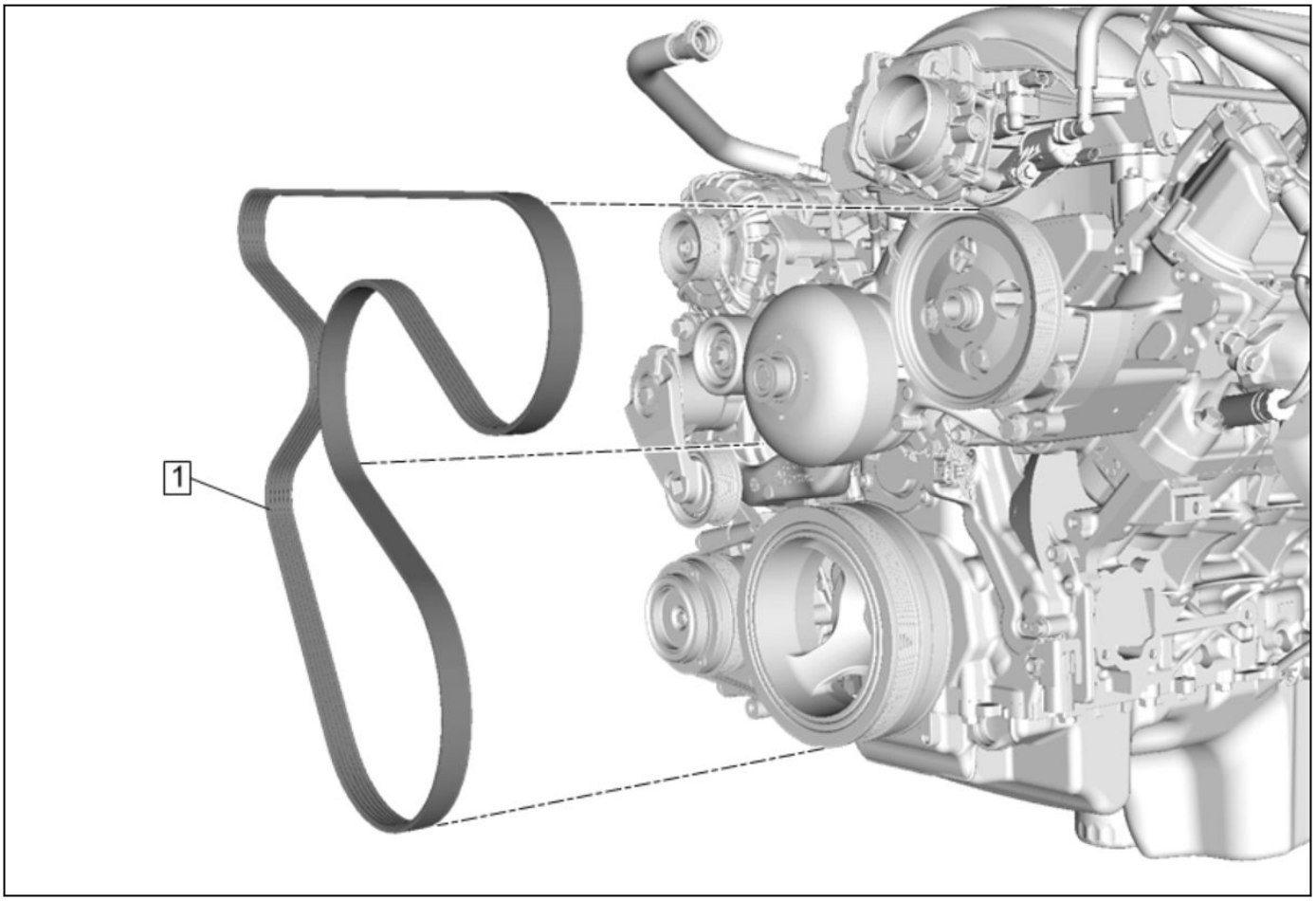

4845476

4. Install the accessory drive belt (1) to the generator pulley. [Link target (target-id 332344-) not found]

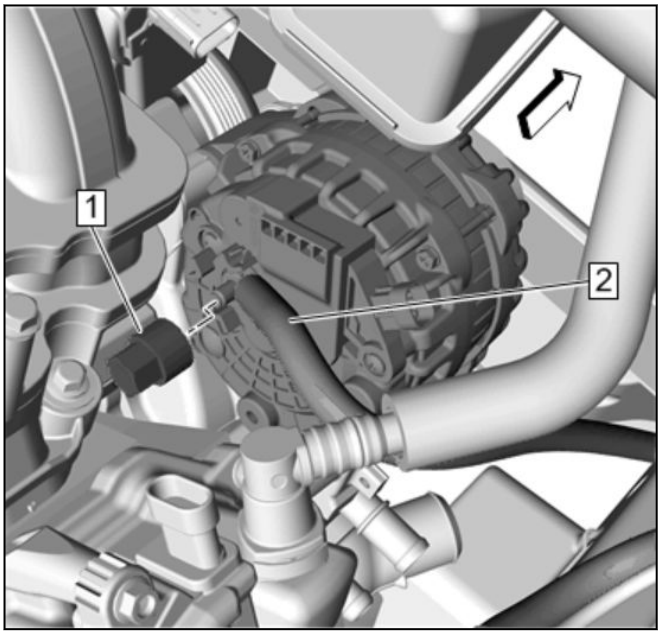

4842498

5. Battery Positive Cable (2) » Install
6. Battery Positive Cable Nut (1) » Install and tighten**15** N•m **(11 lb ft)**

4854159

7. Install the engine cover (1). [Link target (target-id 51637-) not found]

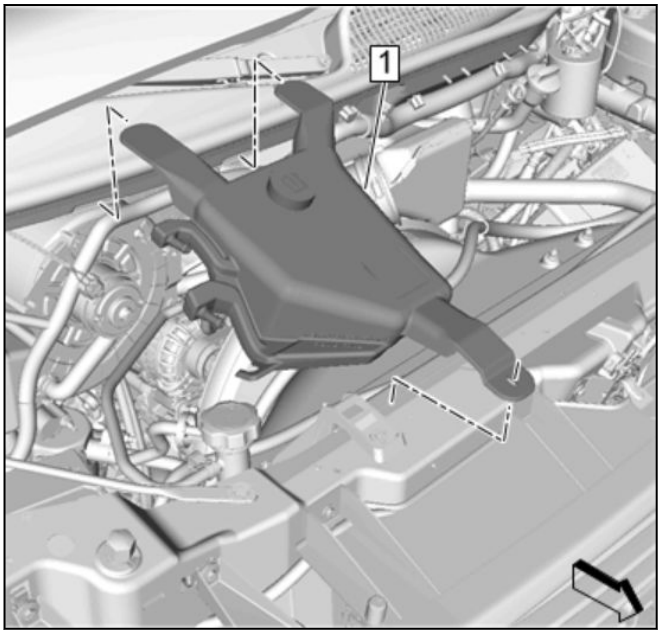

4840951

8. Coolant Recovery Reservoir (1) » Install— [Link target (target-id 37161-) not found]
9. Connect the negative battery cable. *Battery Negative Cable Disconnection and Connection 3-8* *Battery Negative Cable Disconnection and Connection 3-9*

Generator Replacement

Removal Procedure

1. Disconnect the negative battery cable. *Battery Negative Cable Disconnection and Connection 3-8* *Battery Negative Cable Disconnection and Connection 3-9*

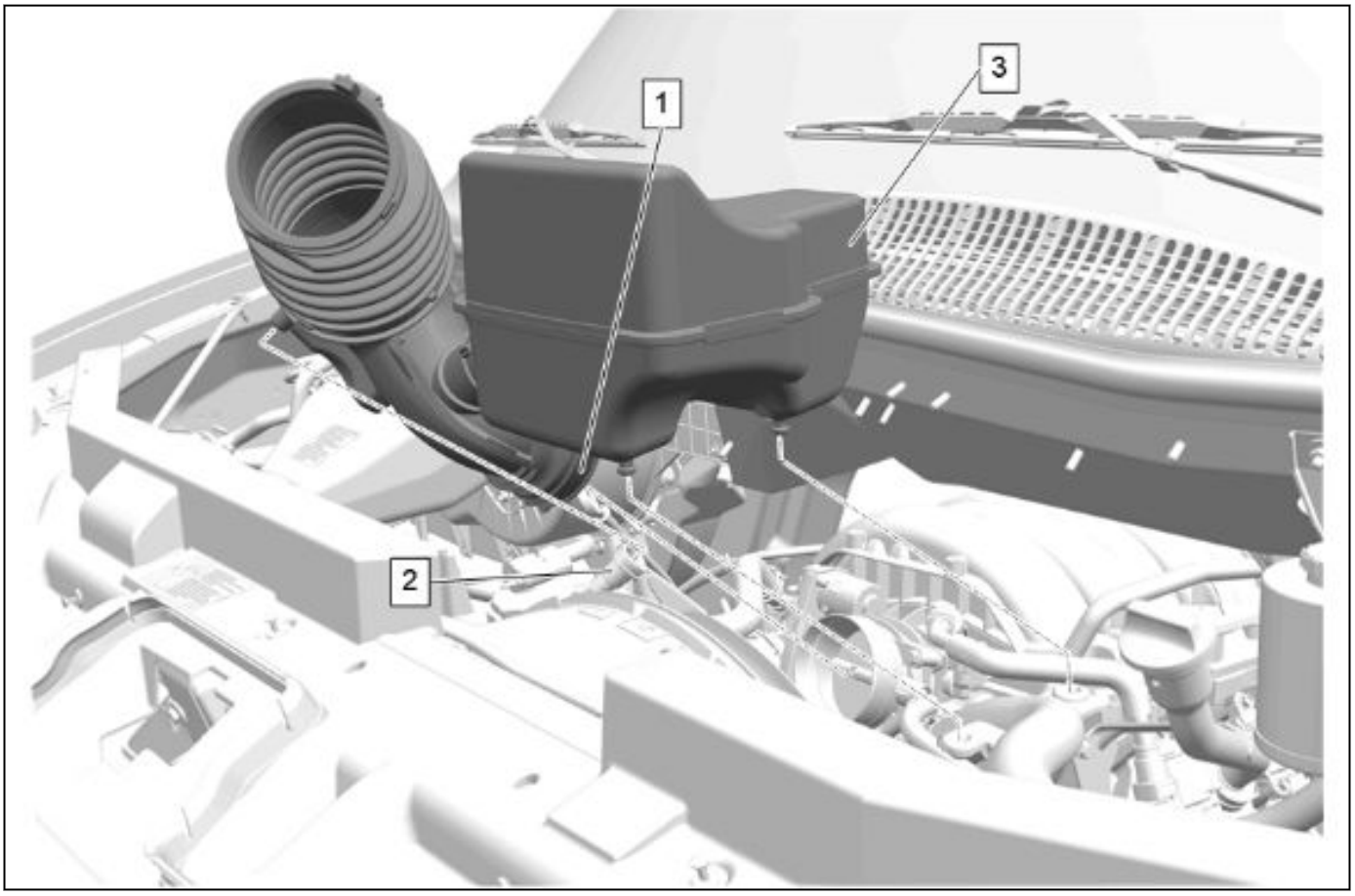

5659972

2. Air Cleaner Outlet Duct (3) » Remove— [Link target (target-id 227760-) not found]

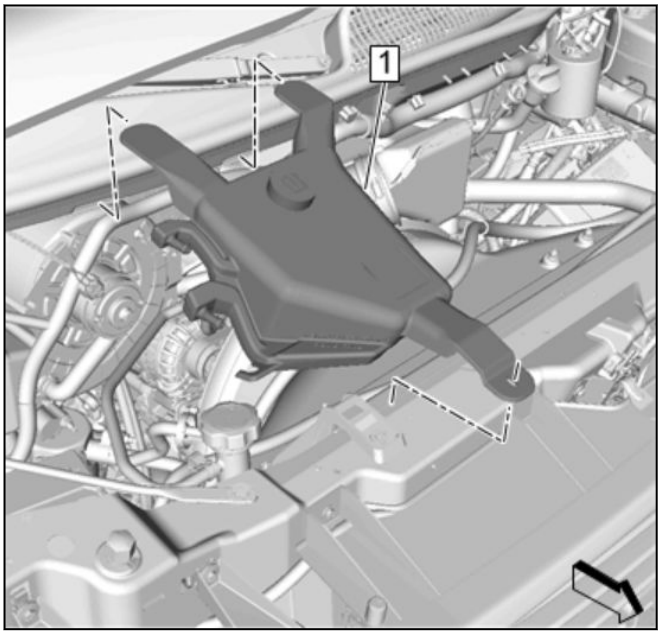

4840951

3. Coolant Recovery Reservoir (1) » Reposition— [Link target (target-id 37161-) not found]

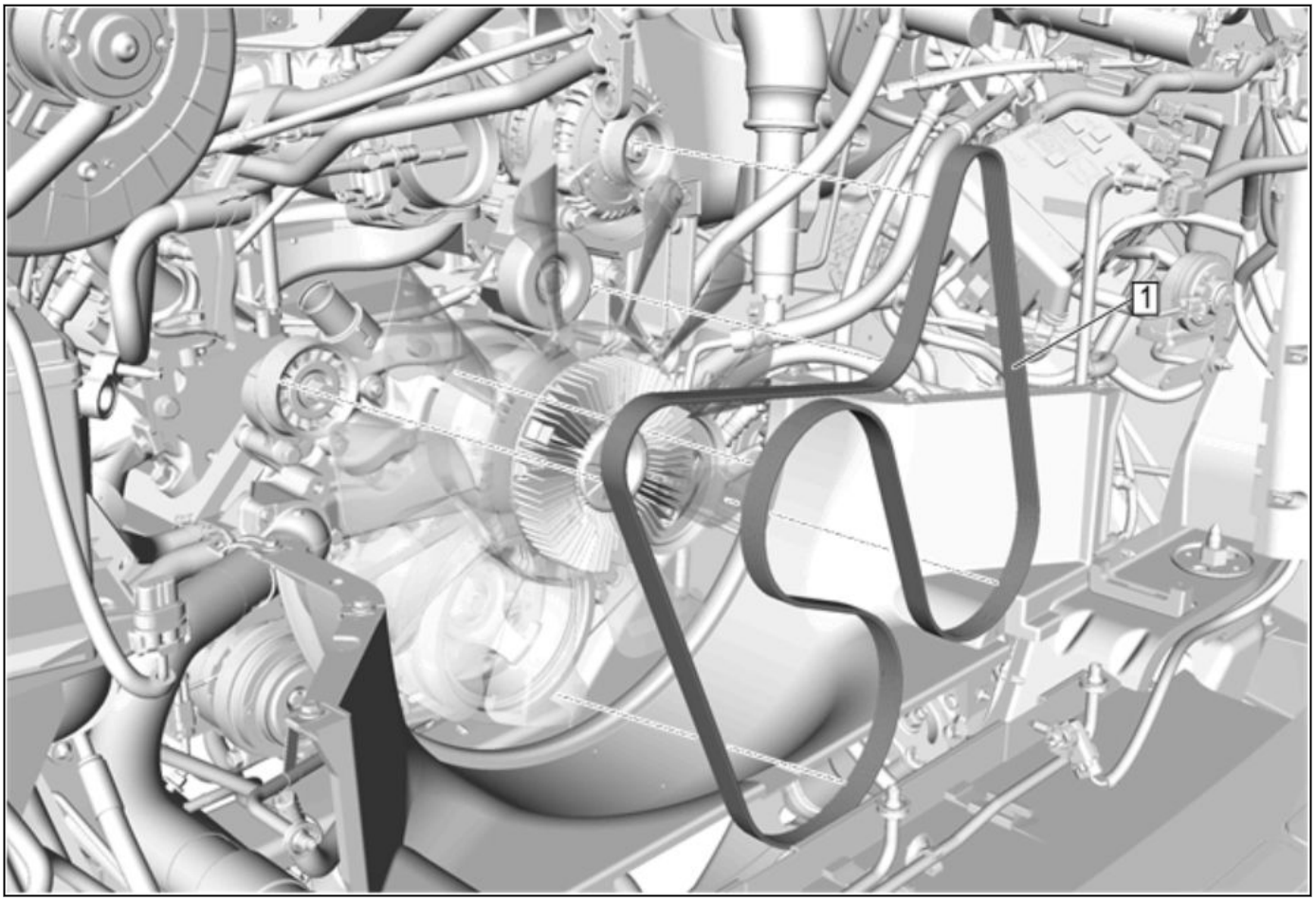

5154763

4. Remove the accessory drive belt (1) from the generator pulley only. [Link target (target-id 332344-) not found]

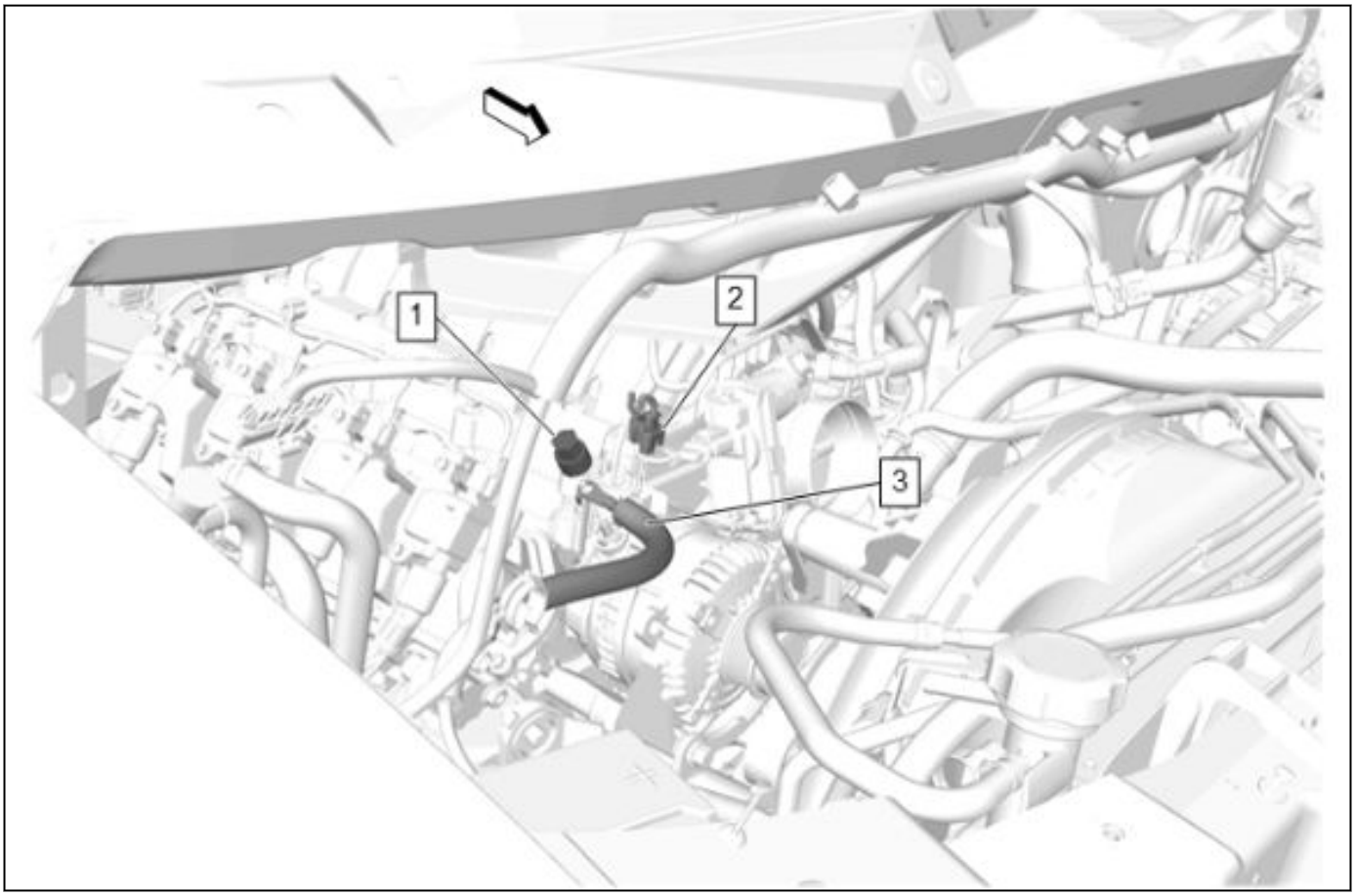

5661969

5. Battery Positive Cable Nut (1) » Remove
6. Battery Positive Cable (3) » Remove
7. Electrical Connector (2) » Disconnect

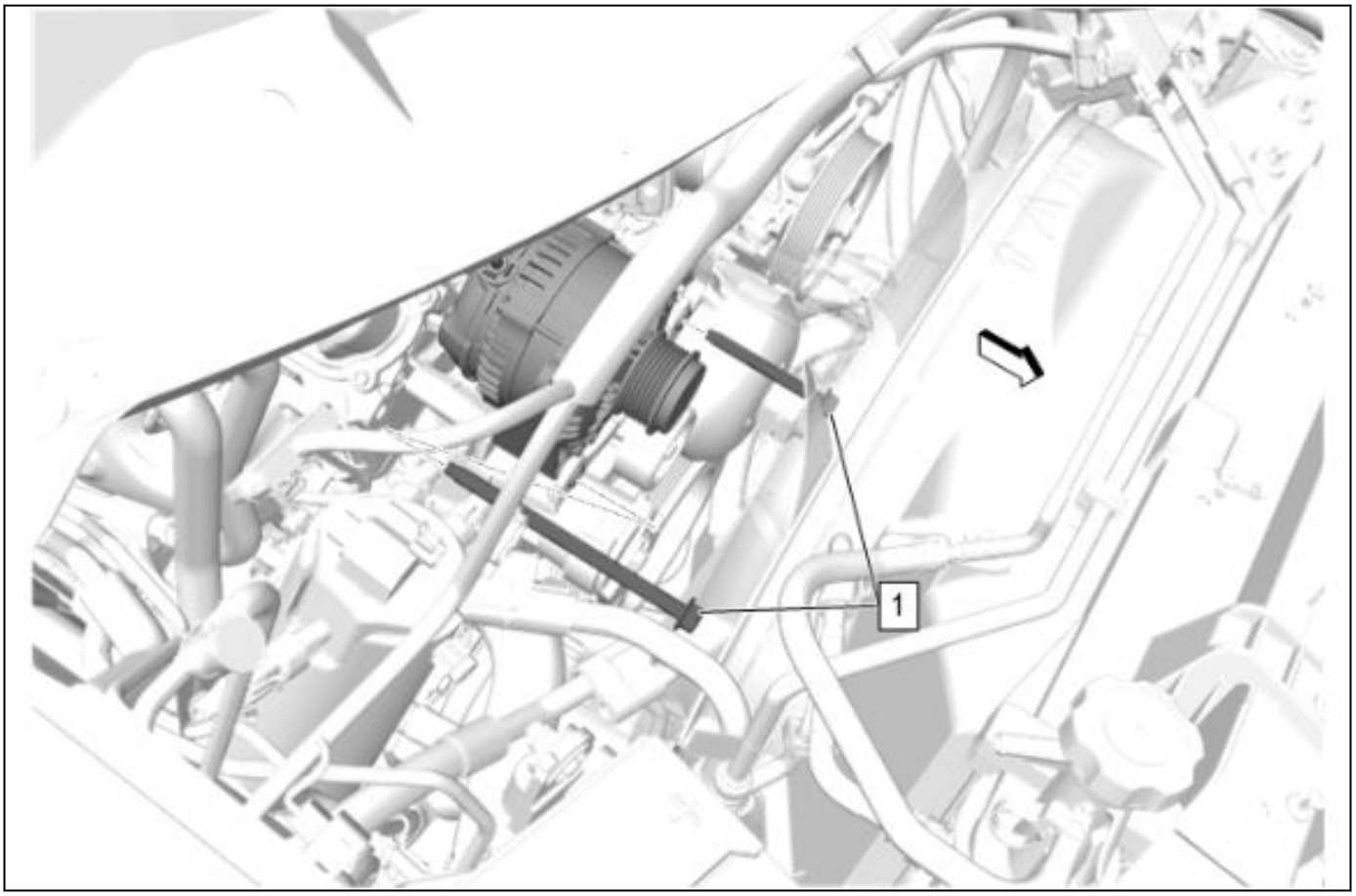

5661970

8. Generator Mounting Bolt (1) » Remove[2x]

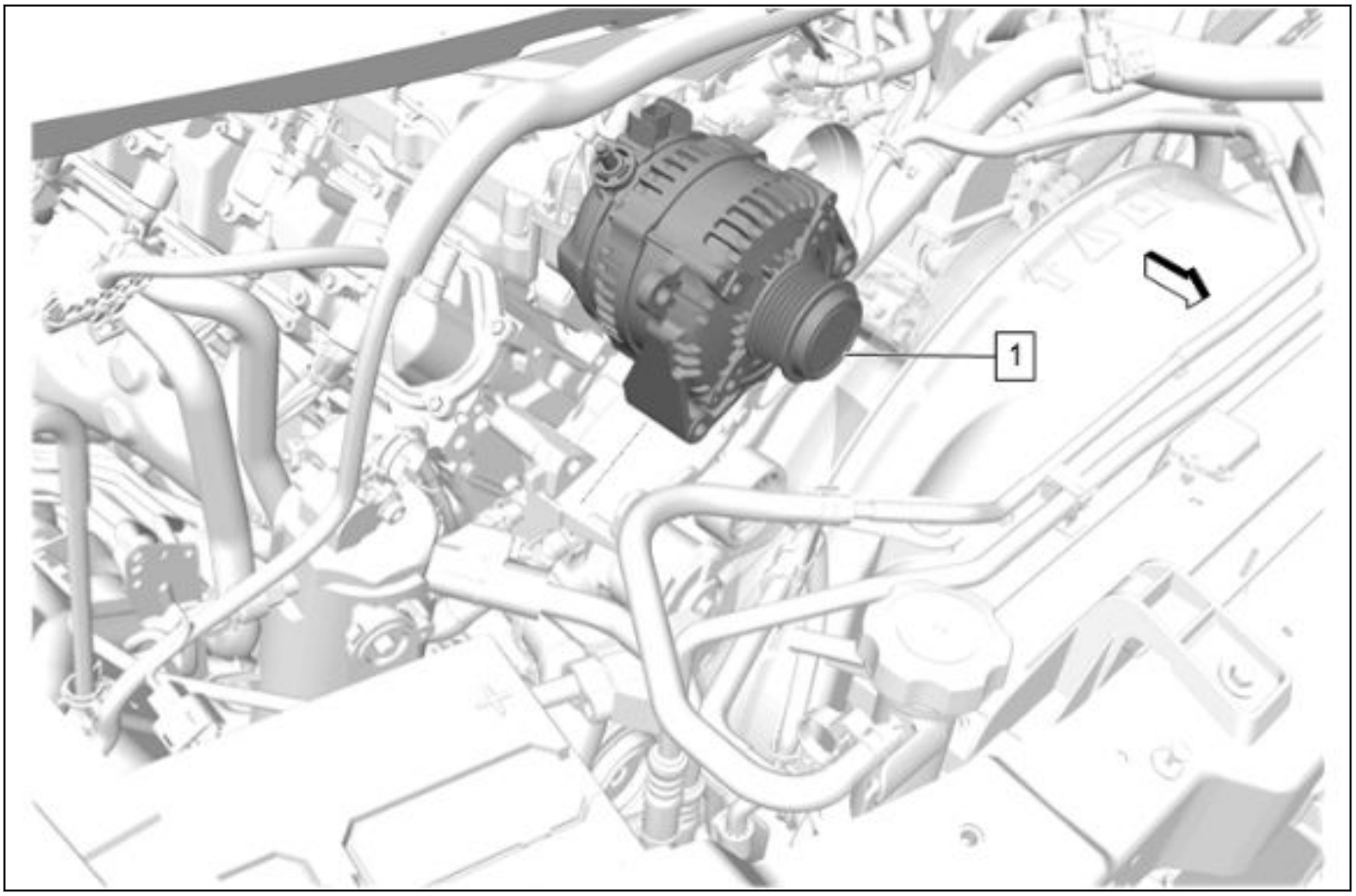

5661971

9. Generator (1) » Remove

Installation Procedure

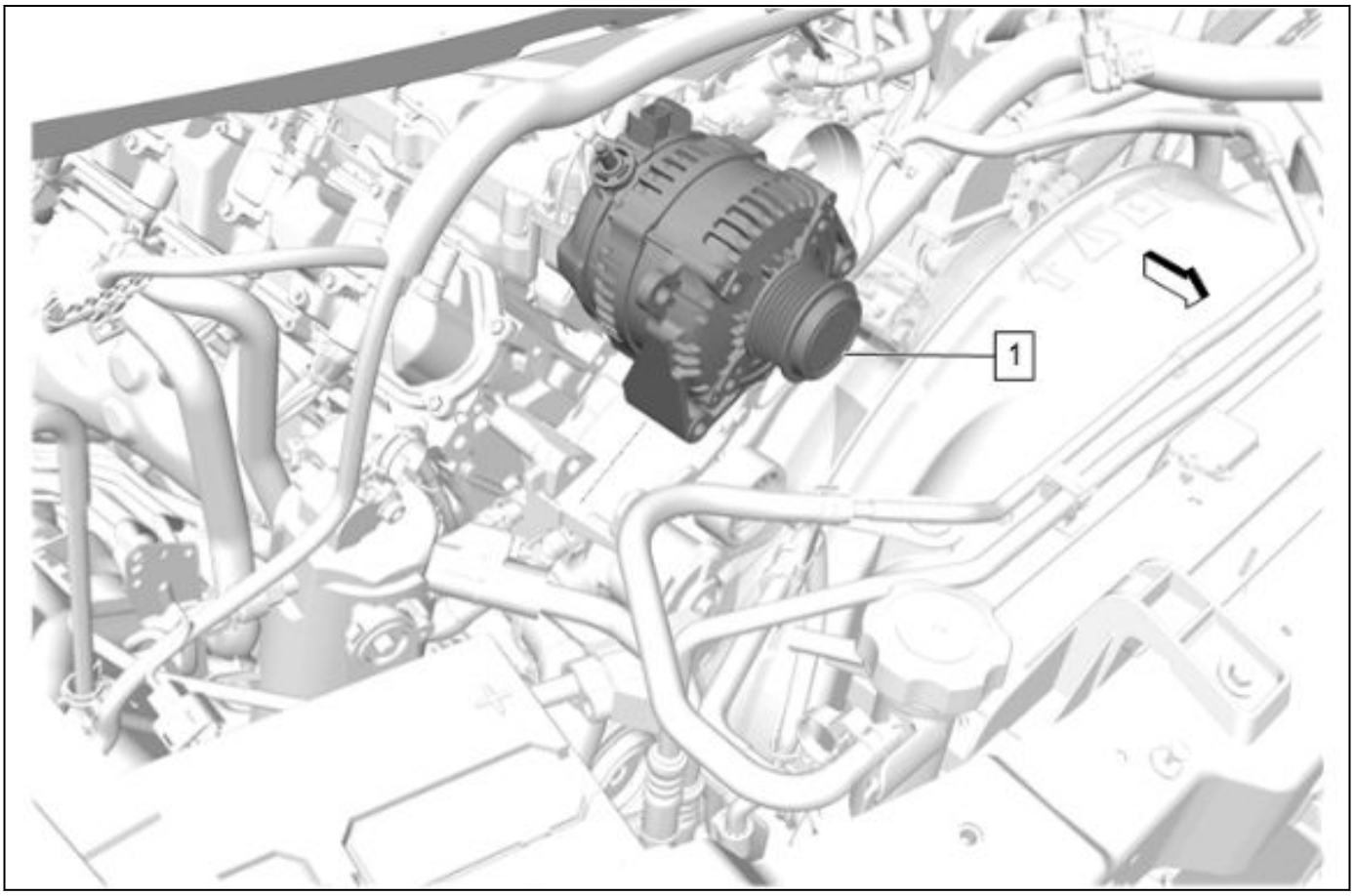

5661971

1. Generator (1) » Install

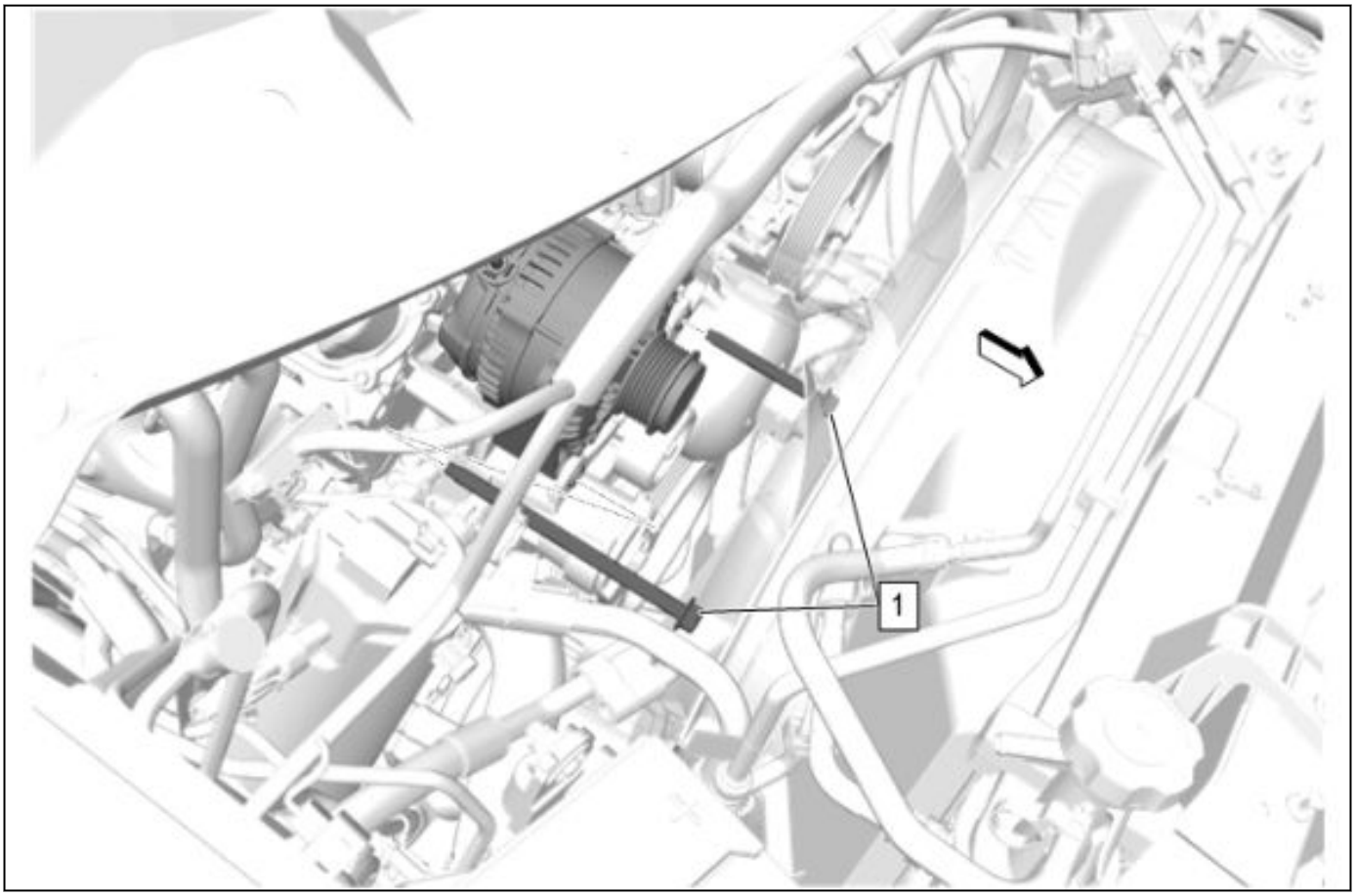

5661970

Caution: Refer to [Link target (target-id 178169-) not found]

2. Generator Mounting Bolt (1) » Install and tighten[2x] **58** N•m **(43 lb ft)**

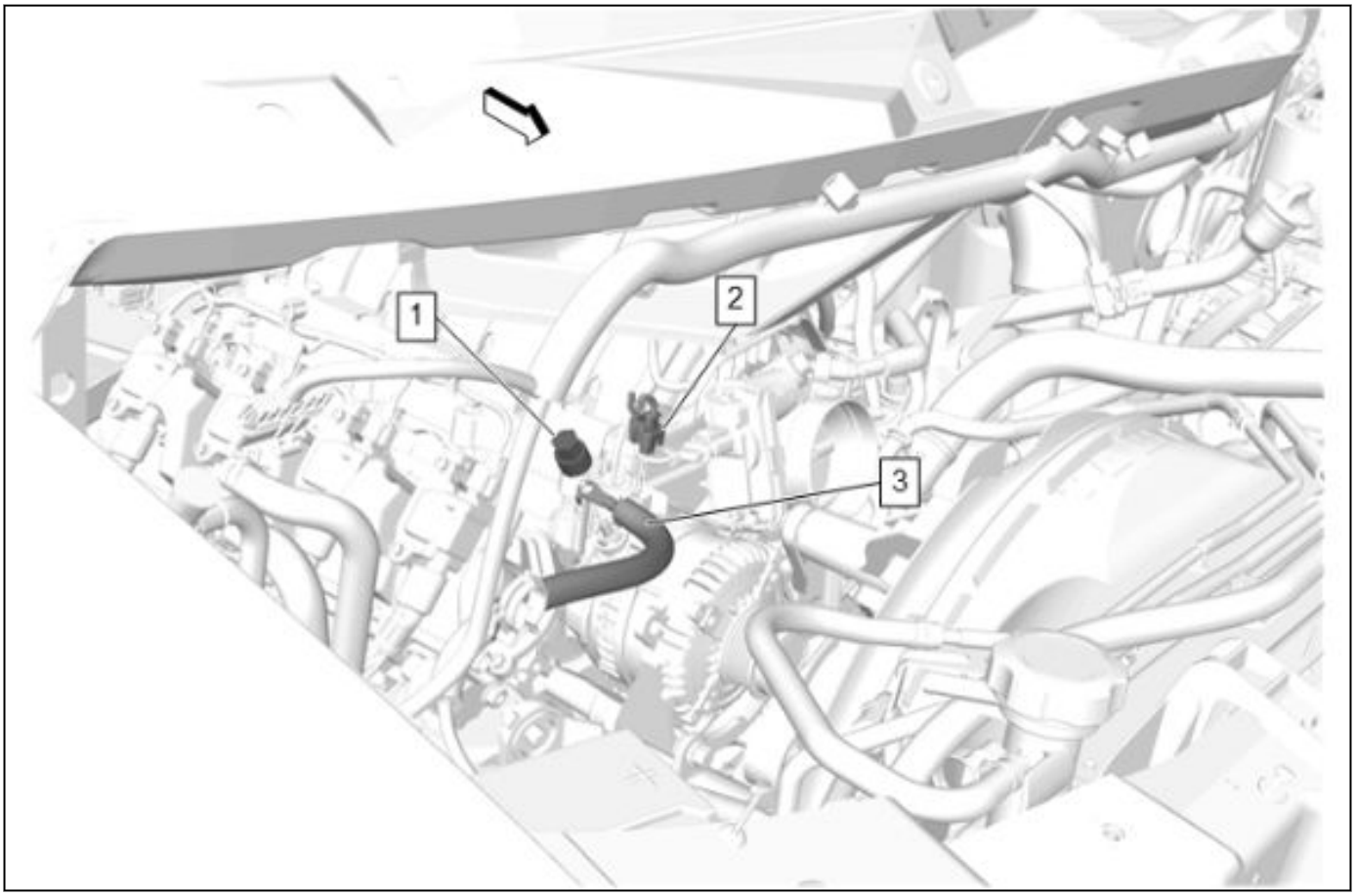

5661969

3. Battery Positive Cable (3) » Install
4. Battery Positive Cable Nut (1) » Install and tighten**15** N•m **(11 lb ft)**
5. Electrical Connector (2) » Connect

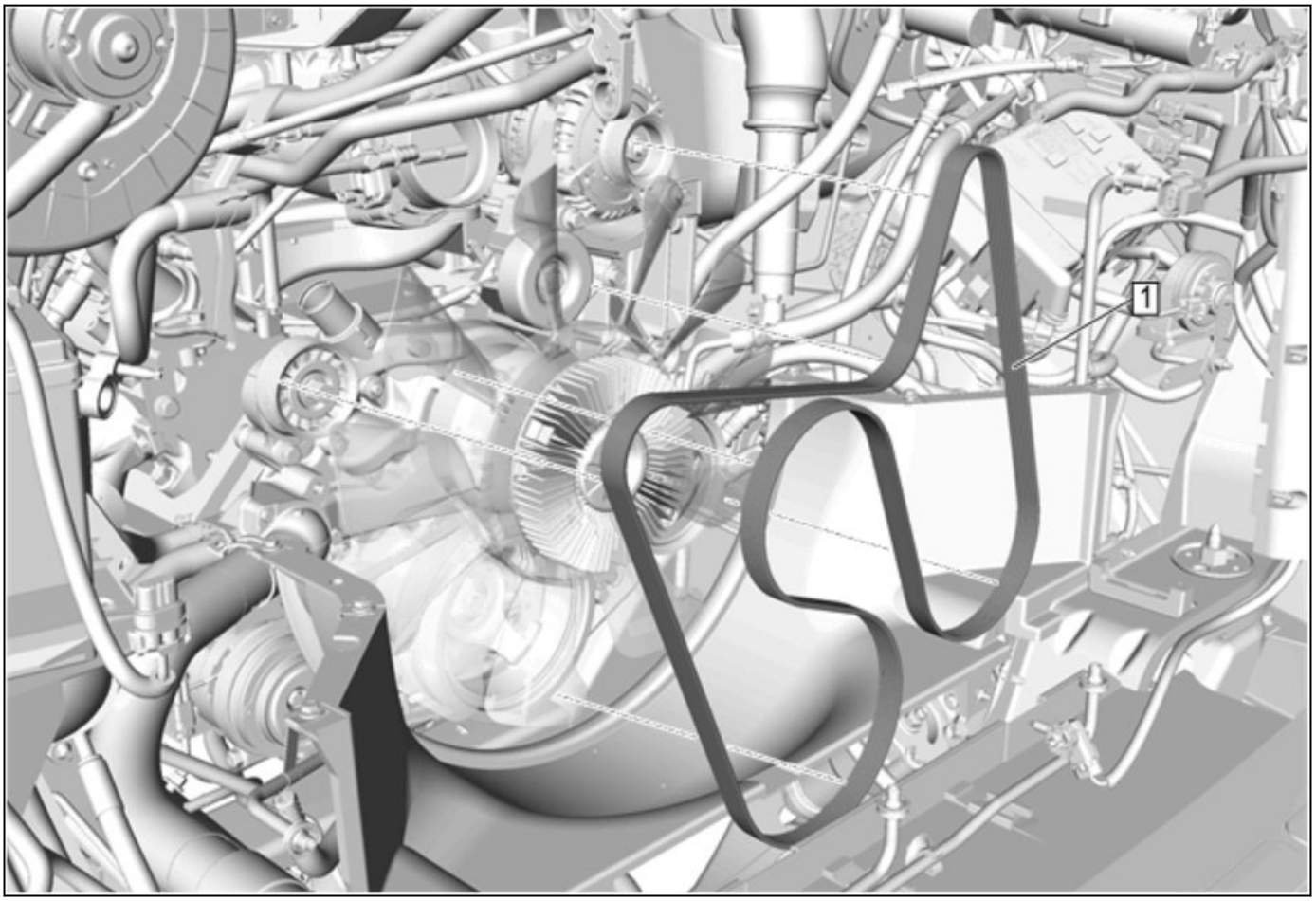

5154763

6. Install the accessory drive belt (1) to the generator pulley. [Link target (target-id 332344-) not found]

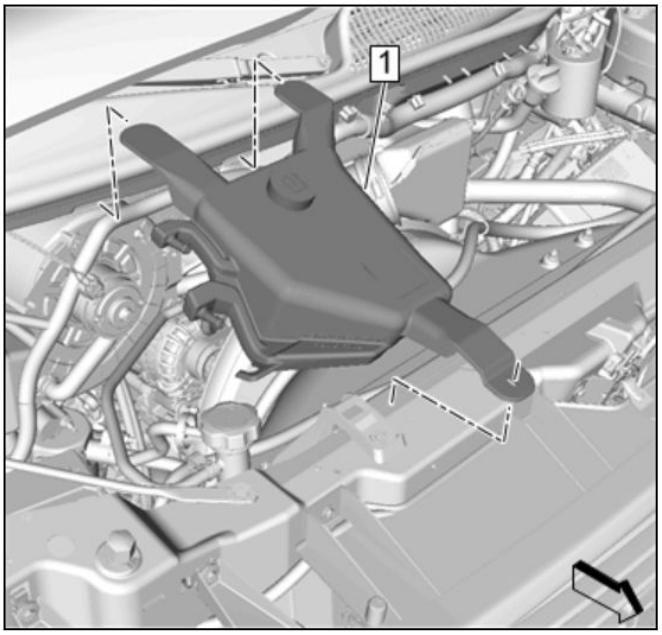

4840951

7. Coolant Recovery Reservoir (1) » Install— [Link target (target-id 37161-) not found]

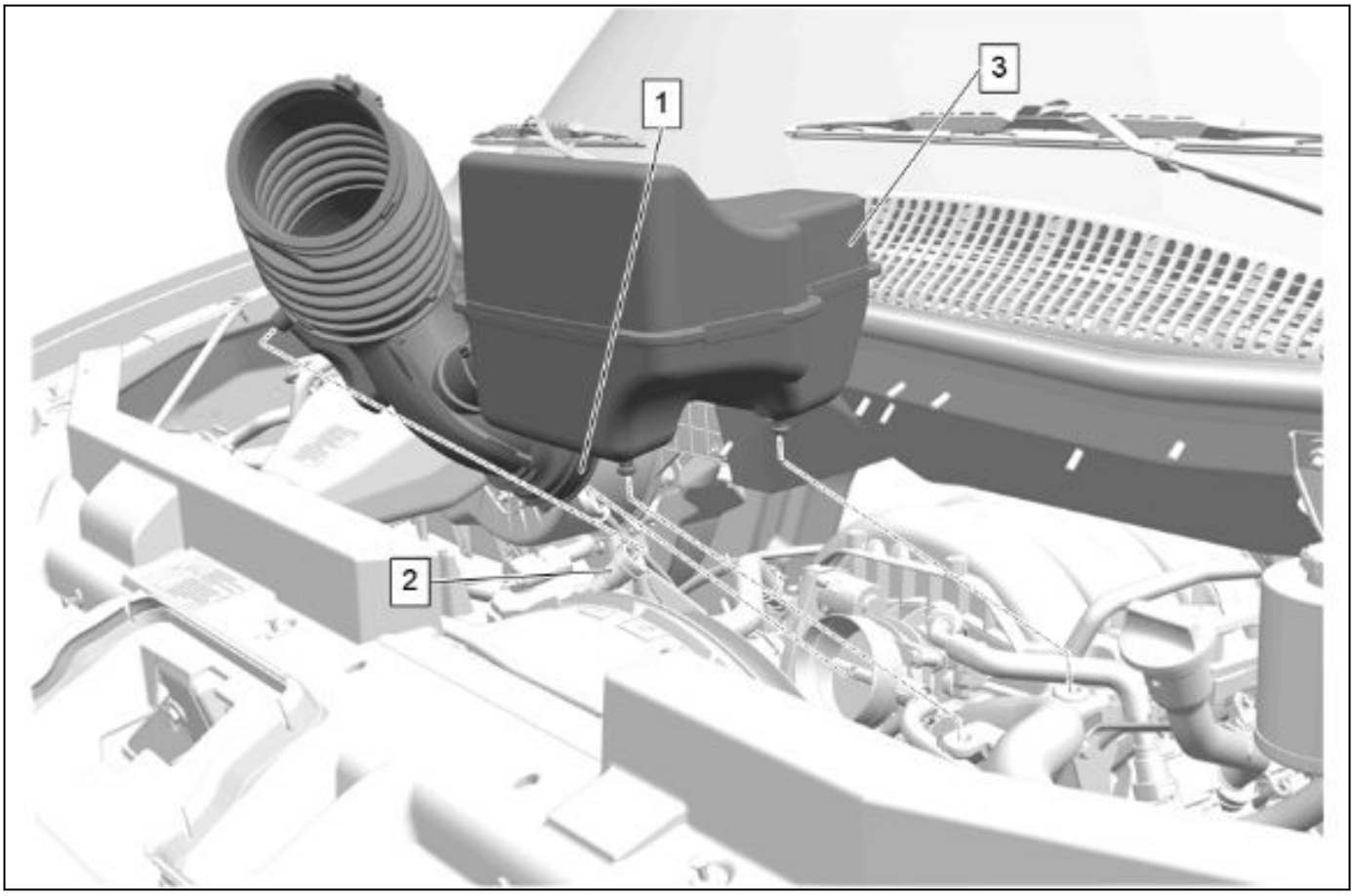

5659972

8. Air Cleaner Outlet Duct (3) » Install— [Link target (target-id 227760-) not found]
9. Connect the negative battery cable. *Battery Negative Cable Disconnection and Connection 3-8* *Battery Negative Cable Disconnection and Connection 3-9*

Section 4

HVAC

HVAC - Manual **4-2**
Schematic and Routing Diagrams **4-2**
HVAC Schematics 4-3

HVAC

HVAC - Manual

Schematic and Routing Diagrams

HVAC Schematics (Front Air Delivery Controls and Front Blower Motor)

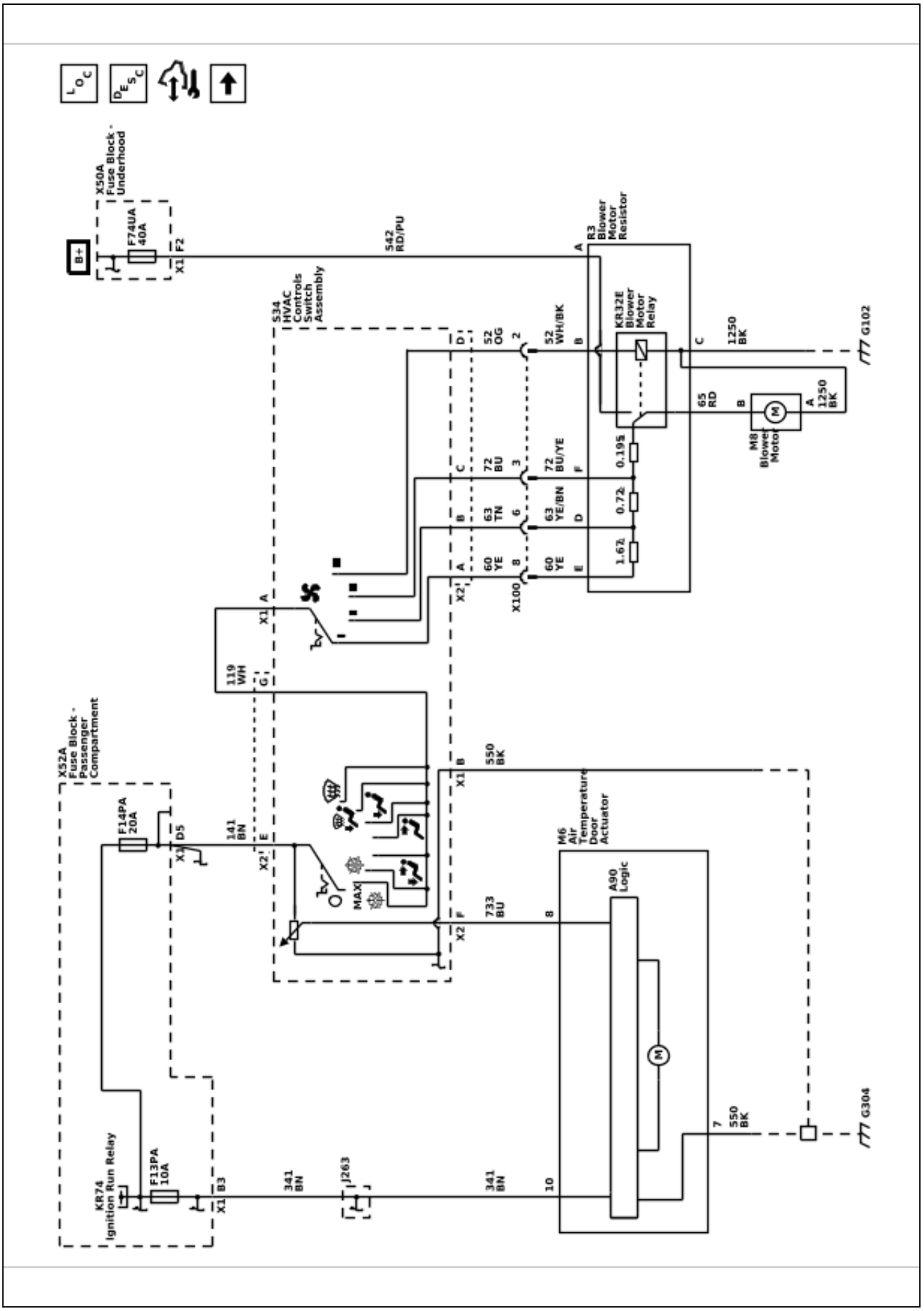

HVAC Schematics (Compressor Controls)

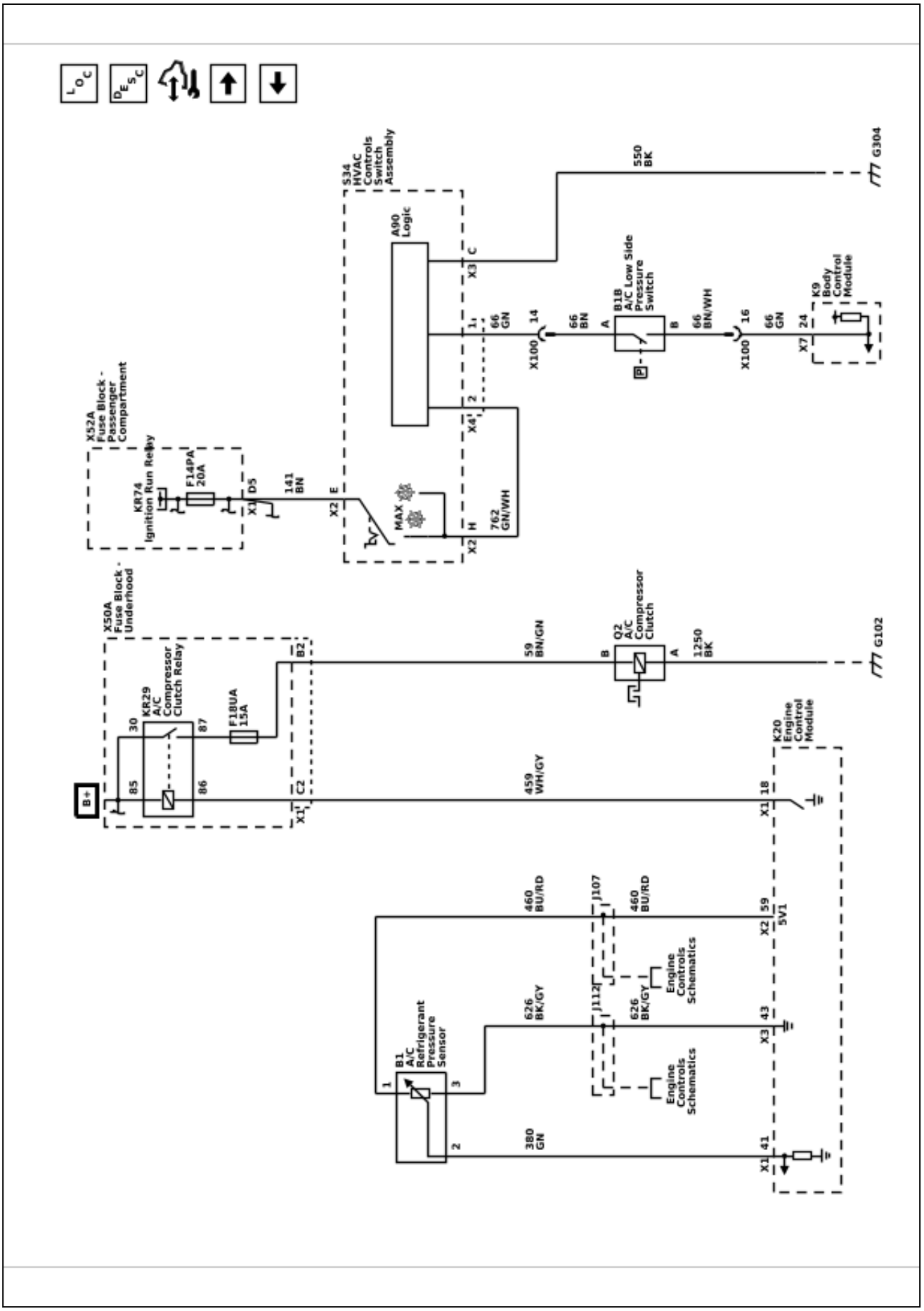

7085730

HVAC Schematics (Rear HVAC with Rear Air Conditioning, with Rear HVAC Controls - Air Delivery Controls (C69))

7085731

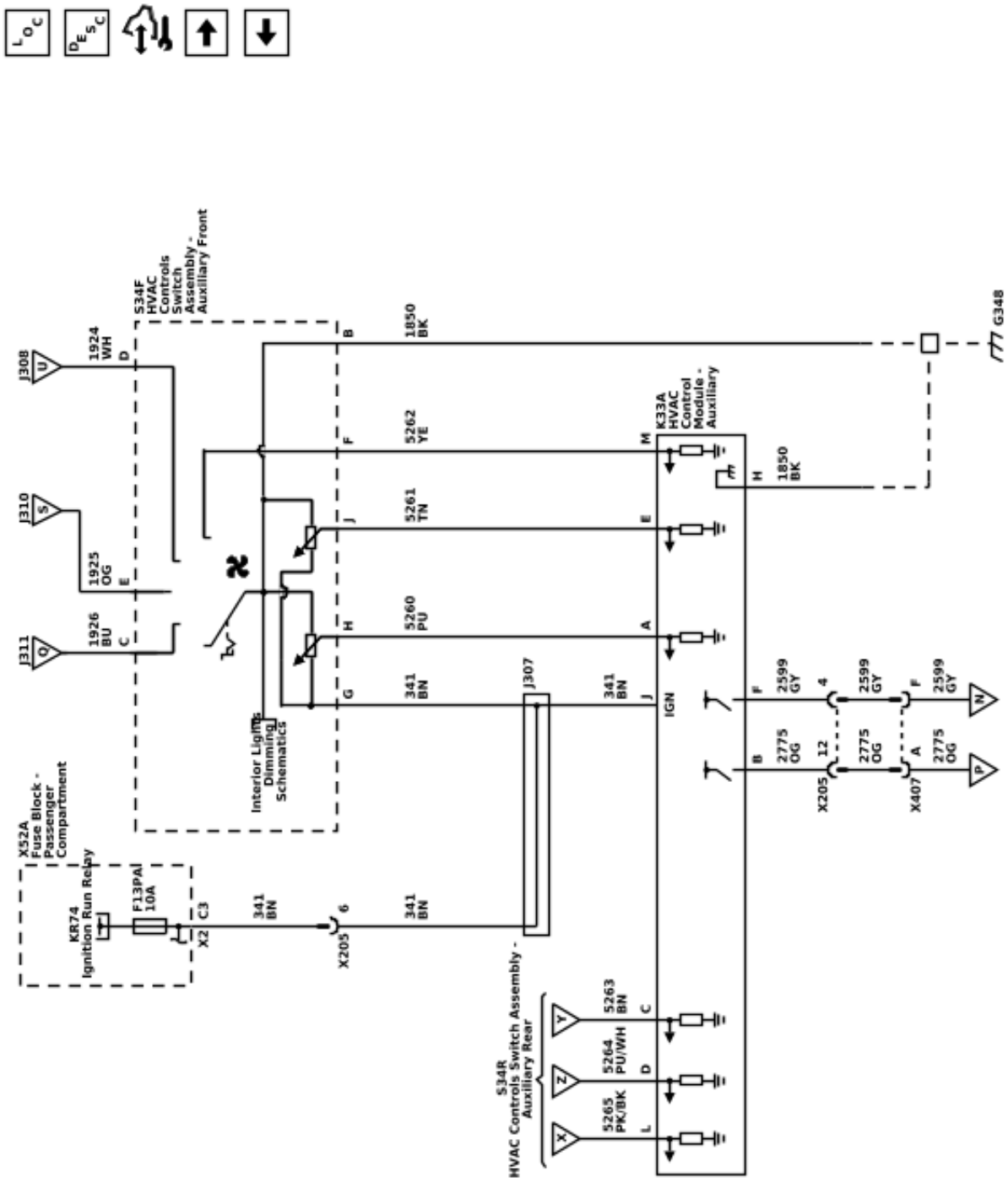

HVAC Schematics (Rear HVAC with Rear Air Conditioning, with Rear HVAC Controls - Rear Controls (C69))

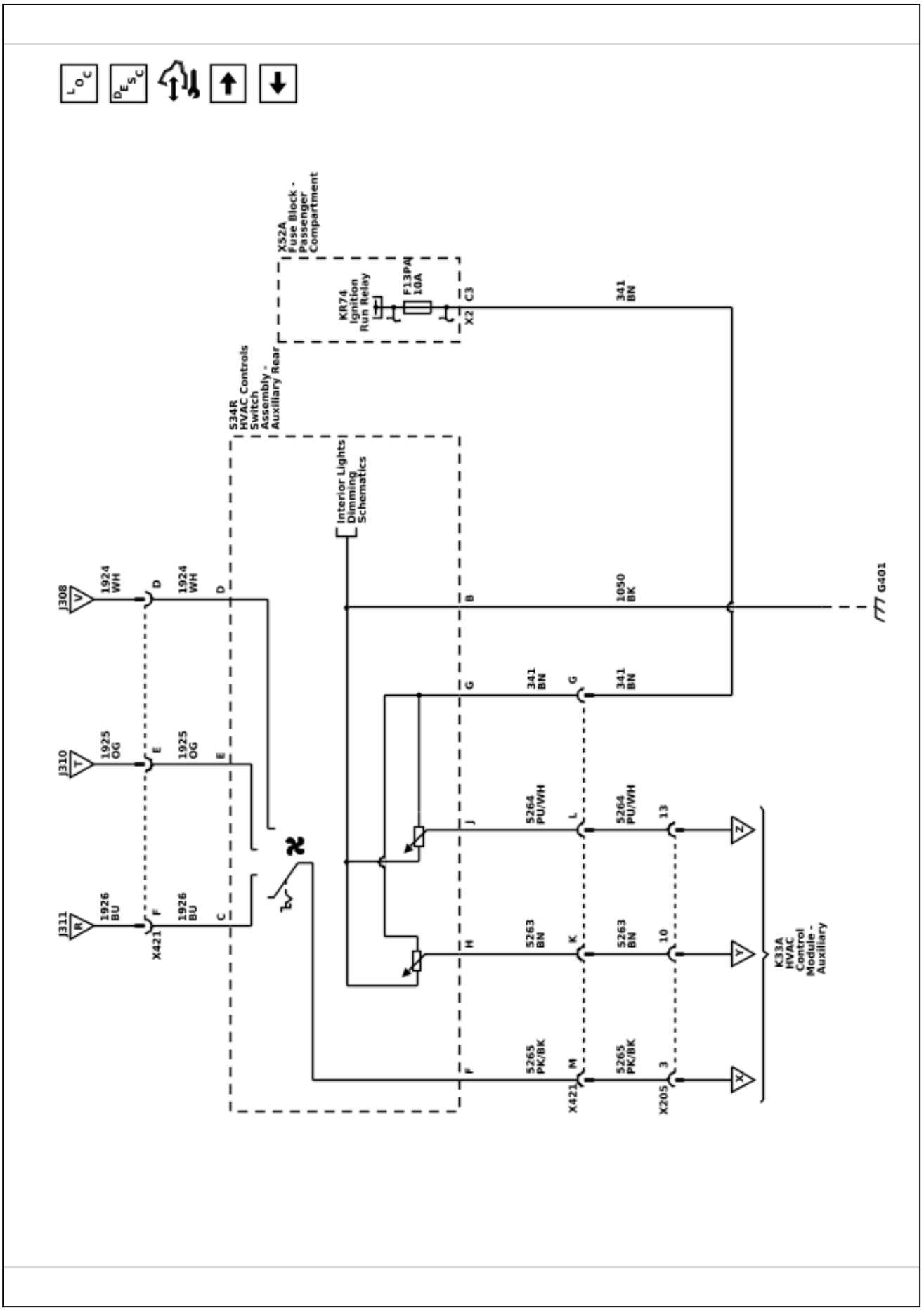

7085732

HVAC Schematics (Rear HVAC with Rear Air Conditioning, with Rear HVAC Controls - Front Controls (C69))

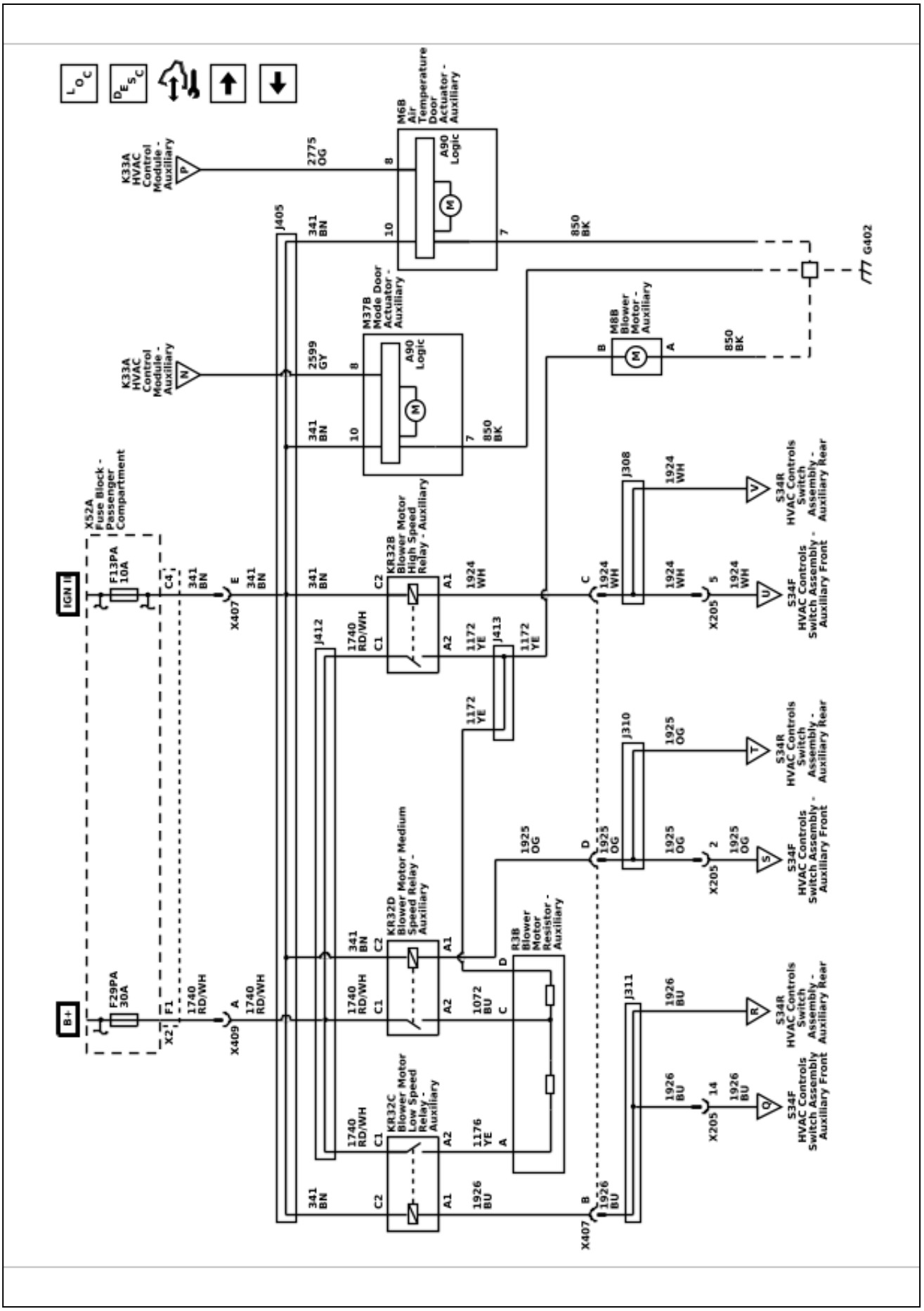

HVAC Schematics (Rear HVAC with Rear Air Conditioning, without Rear HVAC Controls - Air Delivery Controls (C69))

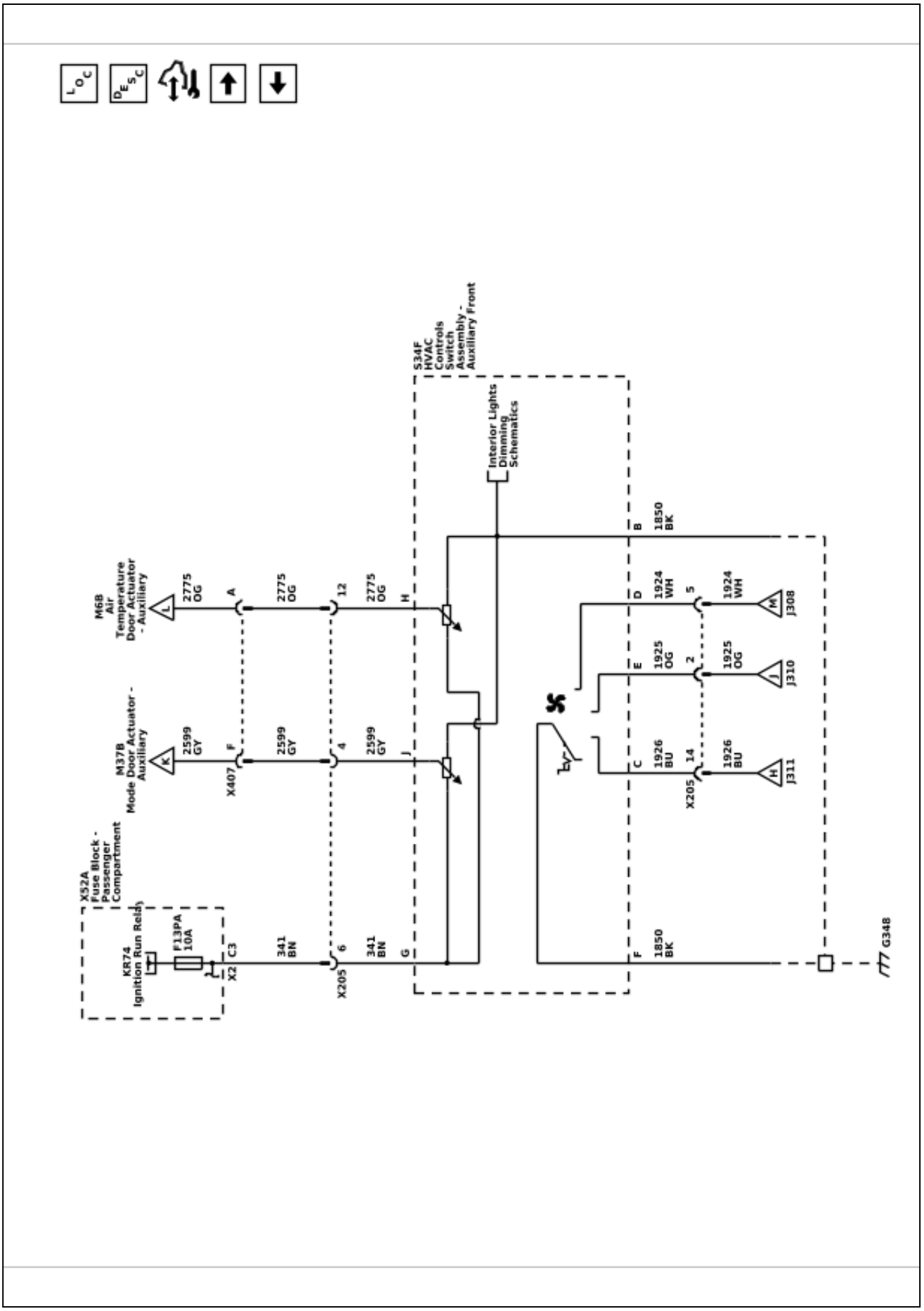

7085734

HVAC Schematics (Rear HVAC with Rear Air Conditioning, without Rear HVAC Controls - Front Controls (C69))

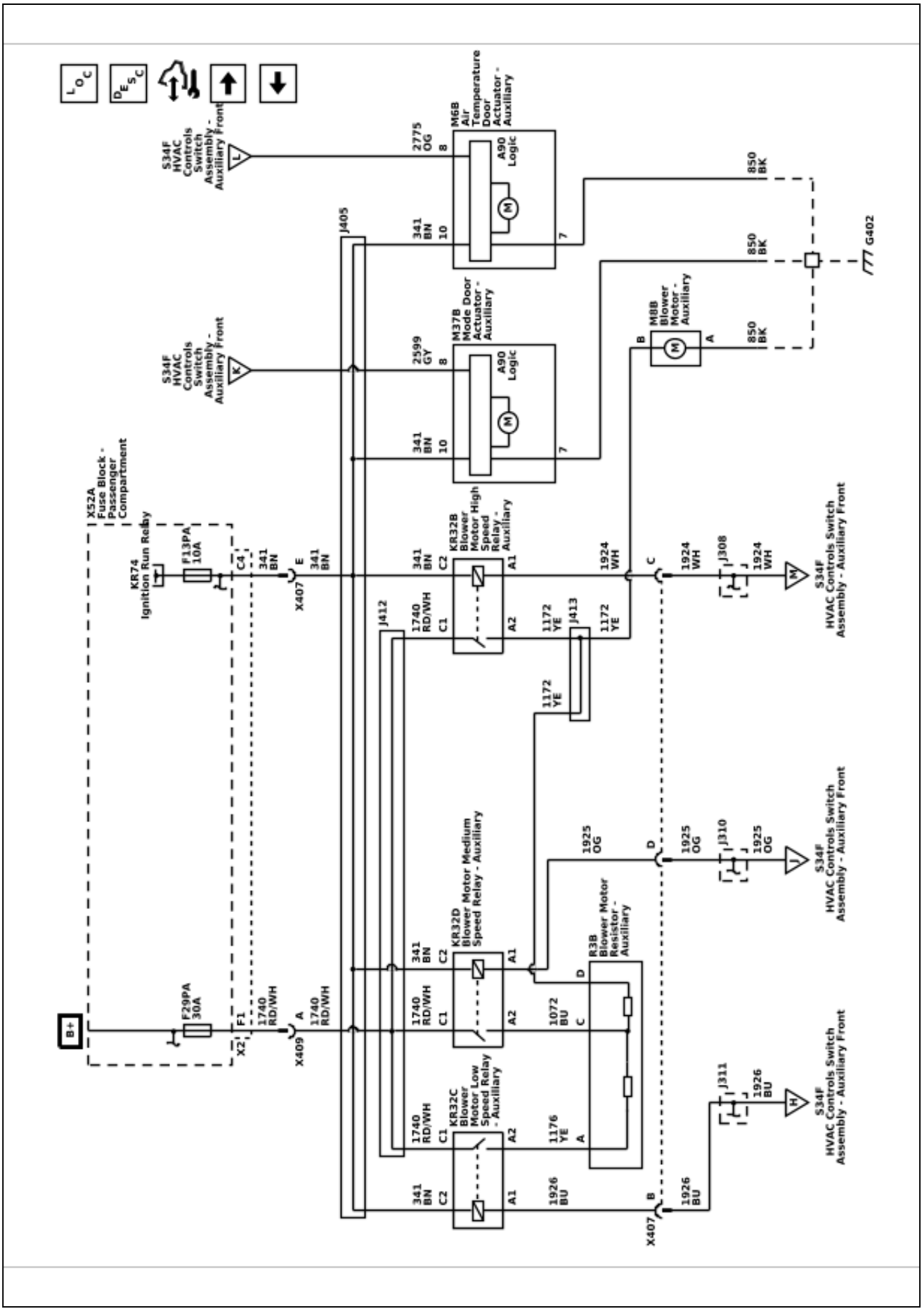

HVAC Schematics (Rear HVAC without Rear Air Conditioning (C36 - C69))

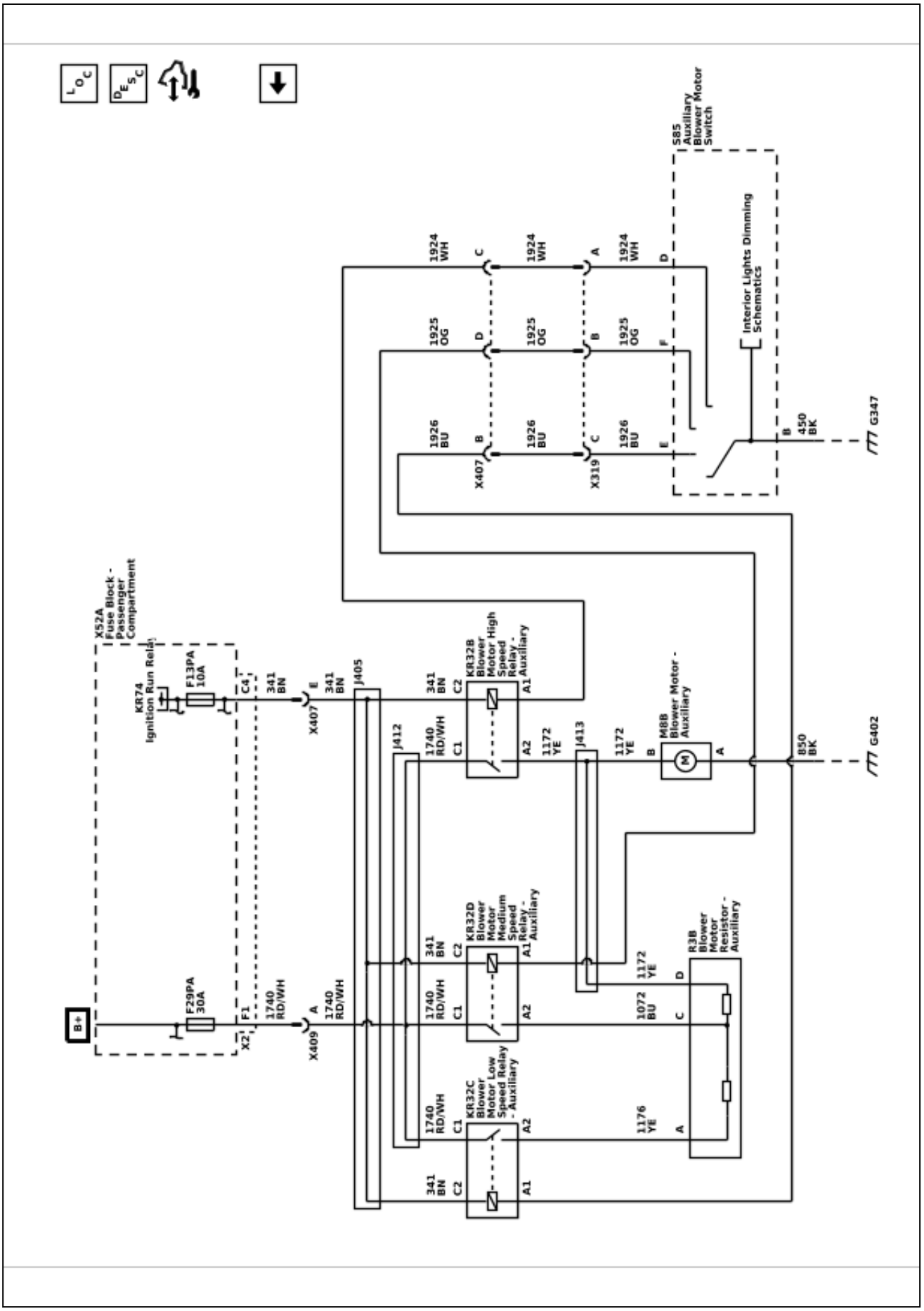

Section 5

Power and Signal Distribution

Data Communications **5-2**
- **Schematic and Routing Diagrams** **5-2**
  - Data Communication Schematics 5-3
  - Body Control System Schematics 5-10
- **Repair Instructions** **5-14**
  - Body Control Module Replacement 5-14
  - Body Control Module Bracket Replacement 5-15

Electrical Component and Inline Harness Connector End Views **5-16**
- **Component Locator** **5-16**
  - Electrical Center Identification Views 5-16
  - Component Connector End Views 5-43
  - Splice Pack Connector End Views 5-249
  - Inline Harness Connector End Views 5-253

Electrical Component Locator and Harness Routing Views **5-332**
- **Schematic and Routing Diagrams** **5-332**
  - Harness Routing Views 5-332
- **Component Locator** **5-366**
  - Front of Vehicle/Engine Compartment Component Views 5-366
  - Powertrain Component Views 5-377
  - Instrument Panel/Center Console Component Views 5-386
  - Passenger Compartment/Roof Component Views 5-392
  - Door Component Views 5-400
  - Luggage Compartment/Rear of Vehicle Component Views 5-405
  - Wheels/Vehicle Underbody Component Views 5-406
  - Ground Views 5-415

Wiring Systems and Power Management **5-429**
- **Specifications** **5-429**
  - Fastener Specifications 5-429
- **Schematic and Routing Diagrams** **5-429**
  - How to Use Electrical Schematics 5-429
  - Electrical Schematic Symbols 5-455
  - Vehicle Zoning Strategy 5-471
  - Schematics RPO Code List 5-472
  - Master Electrical Schematic Icons 5-474
  - Power Distribution Schematics 5-476
  - Power Moding Schematics 5-502
  - Ground Distribution Schematics 5-504
  - Upfitter Provision Schematics 5-516
- **Component Locator** **5-519**
  - Master Electrical Component List 5-519
- **Repair Instructions** **5-546**
  - Front Compartment Fuse Block Replacement (L8T) 5-546
  - Underhood Electrical Center or Junction Block Replacement 5-549
  - Body Wiring Harness Junction Block Replacement 5-551

Power and Signal Distribution

Data Communications

Schematic and Routing Diagrams

Data Communication Schematics (Low Speed GMLAN)

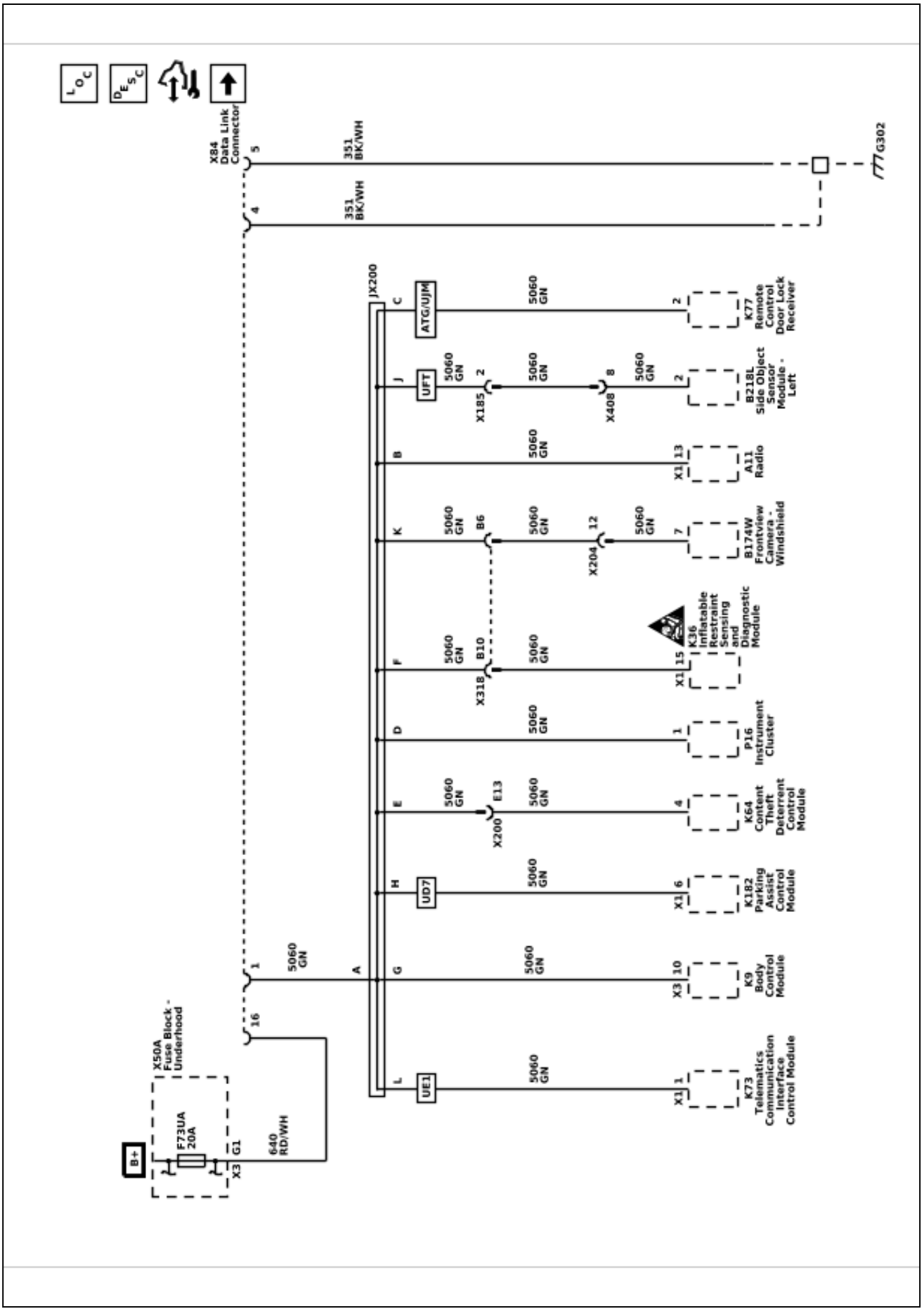

Data Communication Schematics (High Speed GMLAN)

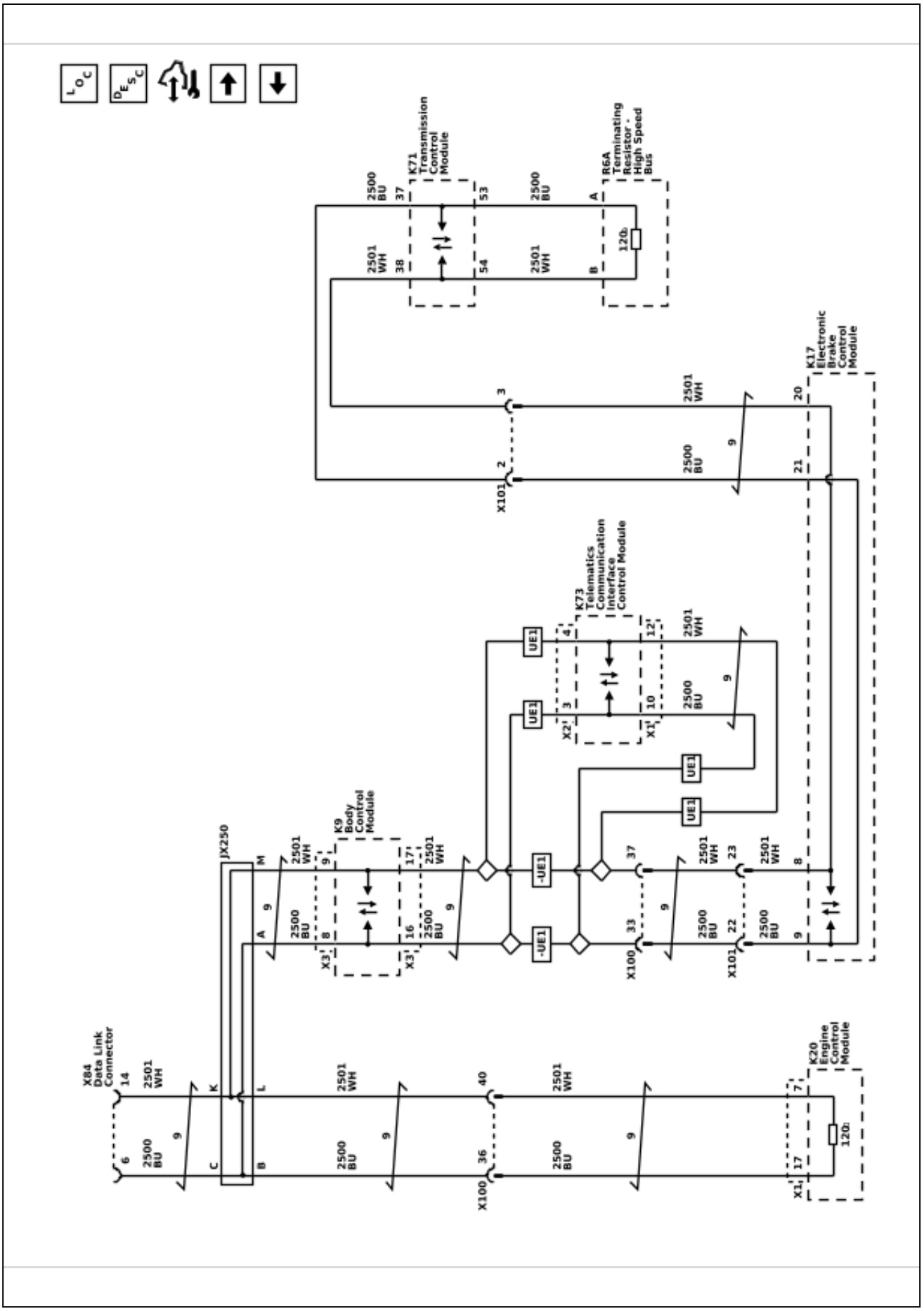

7085739

Data Communication Schematics (Powertrain High Speed GMLAN)

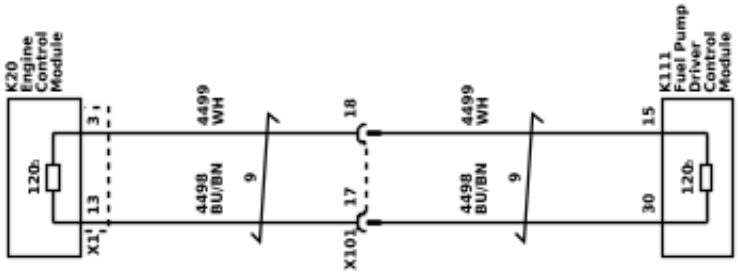

7085740

Data Communication Schematics (Accessory Wakeup)

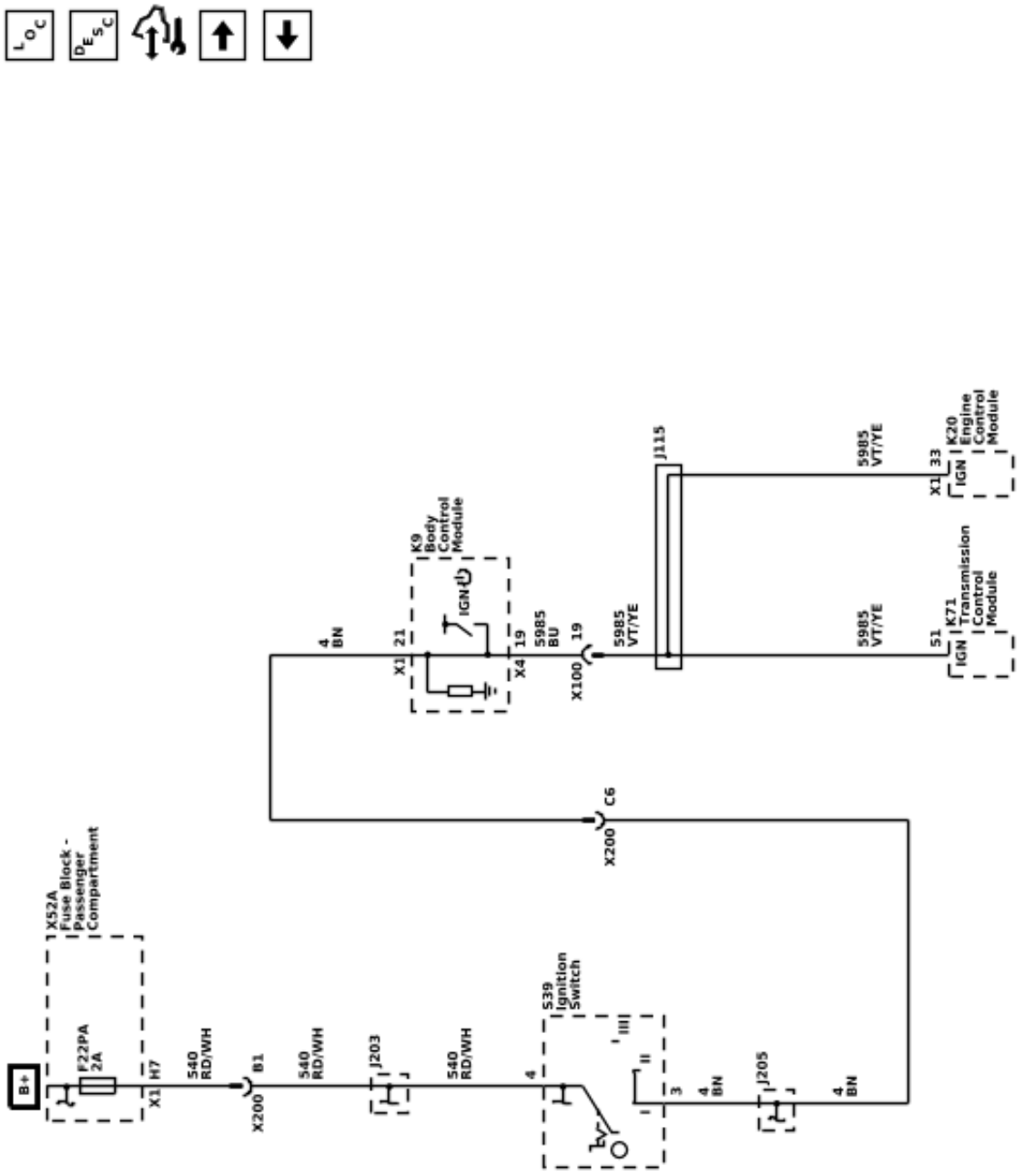

7085741

Data Communication Schematics (Chassis High Speed GMLAN)

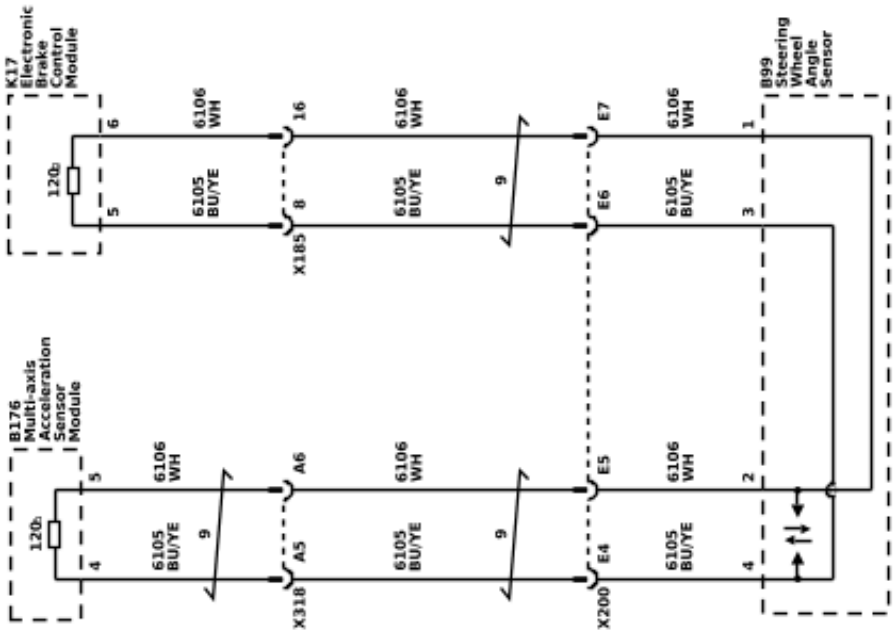

7085742

Data Communication Schematics (Communications Enable)

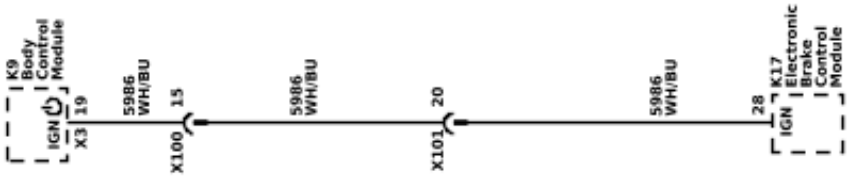

7085743

Data Communication Schematics (Local Interconnect Network)

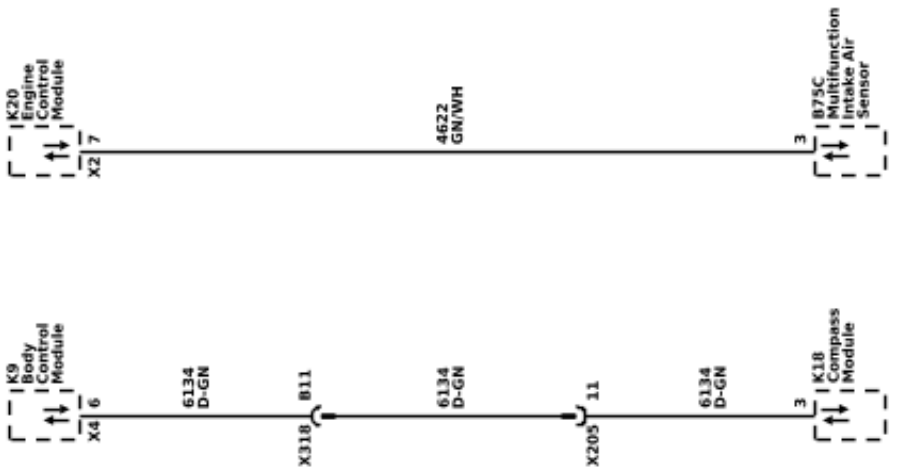

Body Control System Schematics (BCM Power, Ground and Serial Data)

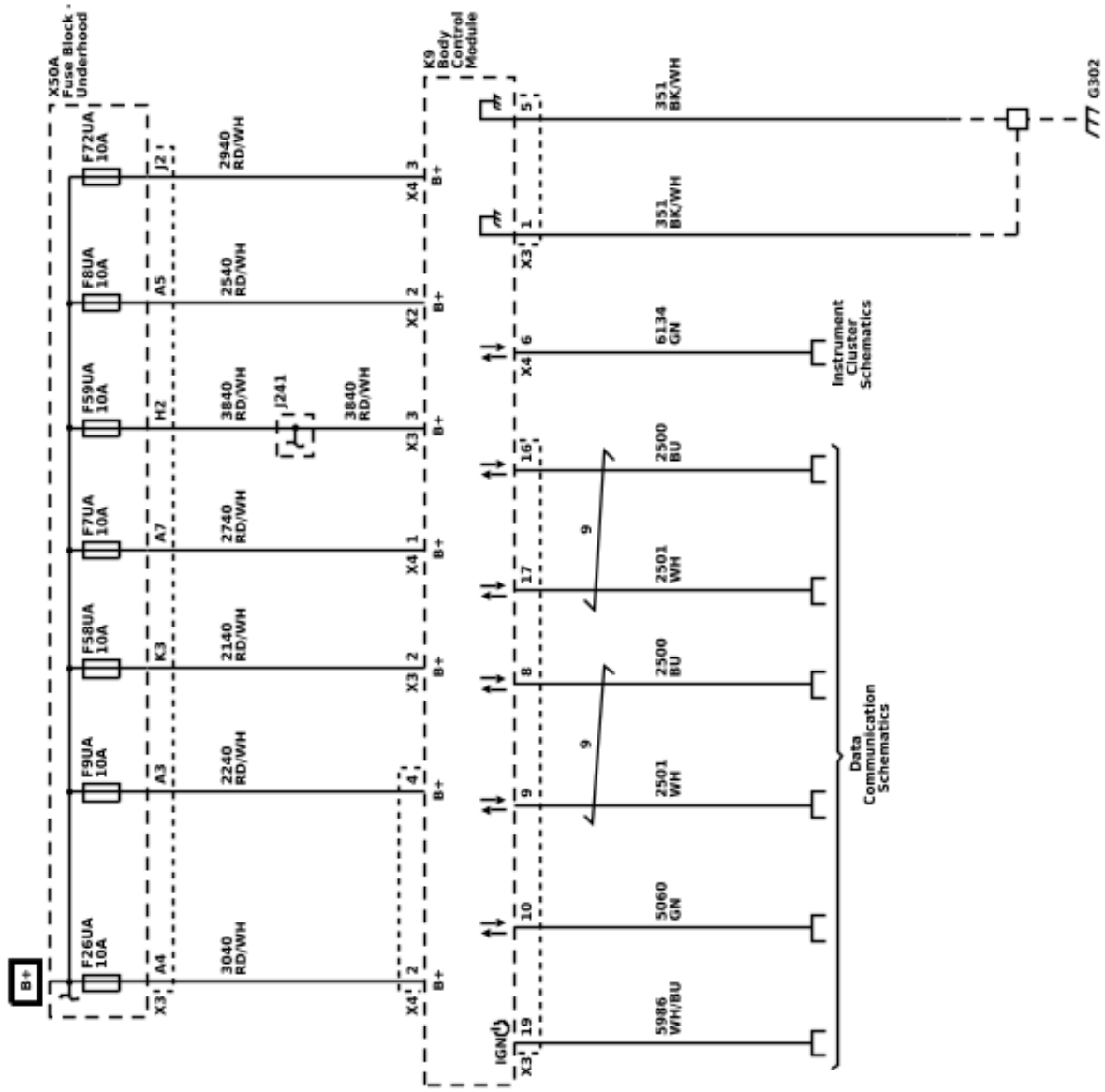

7085744

7085745

Body Control System Schematics (BCM Inputs and Outputs - 1 of 3)

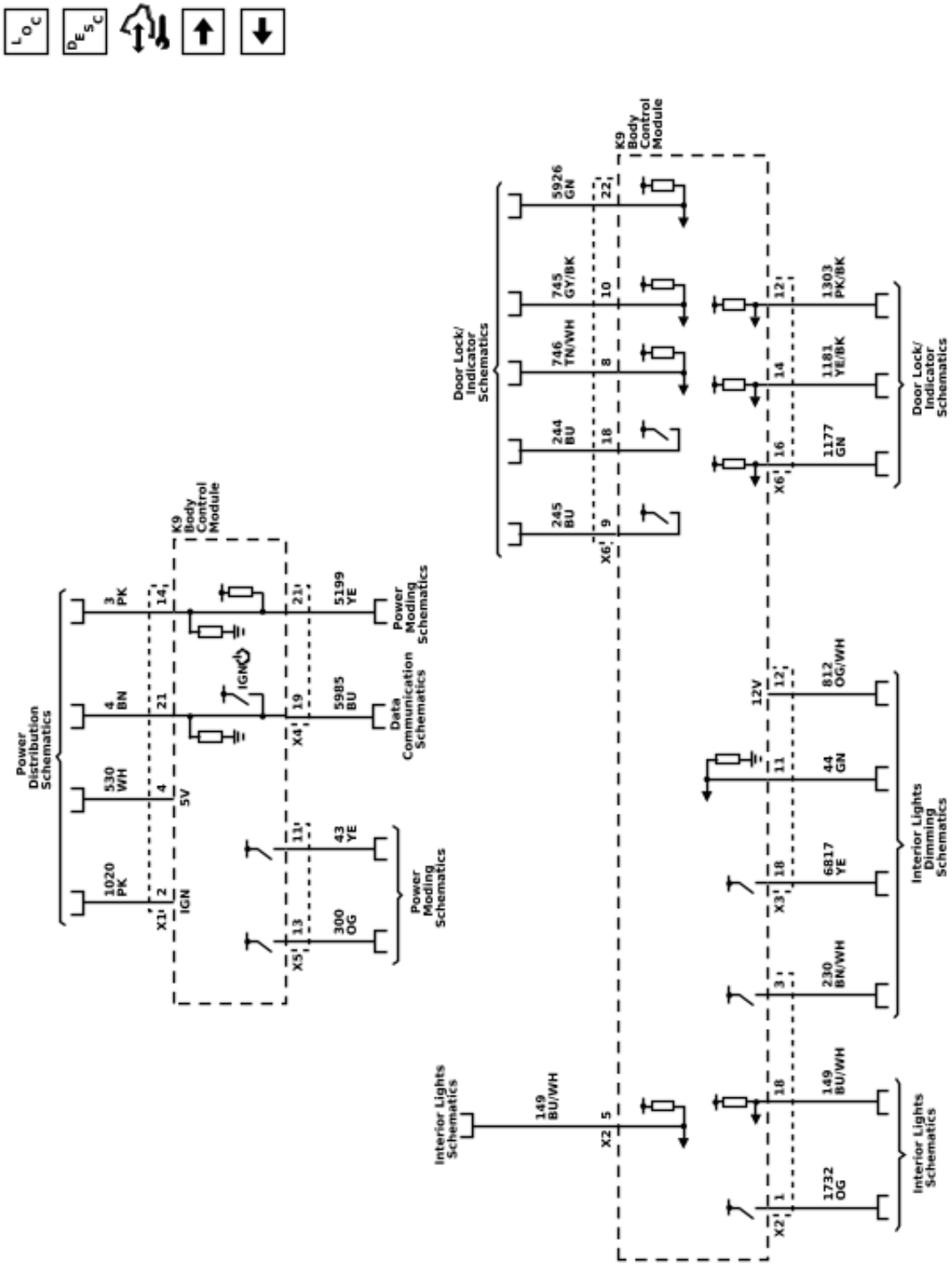

Body Control System Schematics (BCM Inputs and Outputs - 2 of 3)

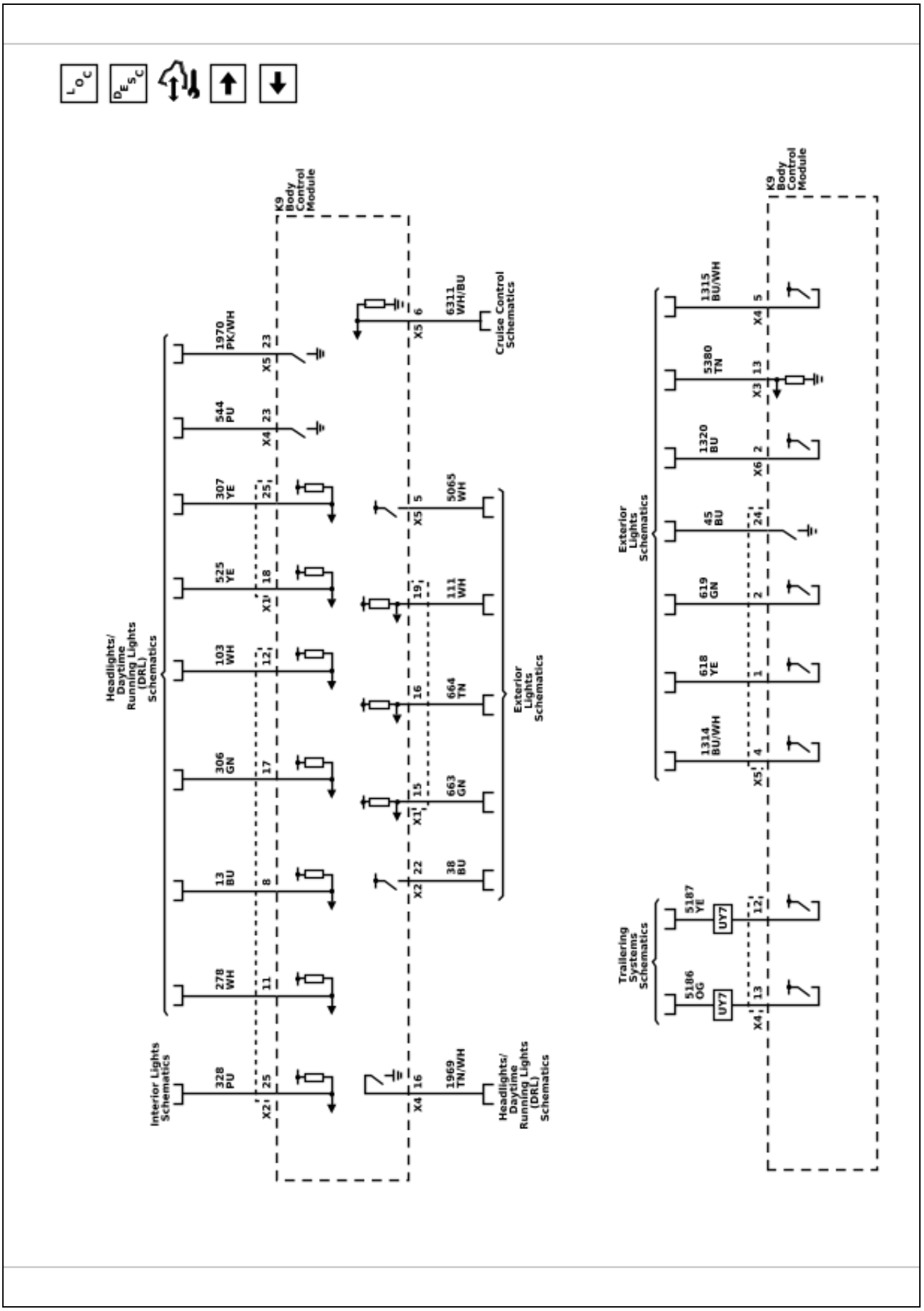

7085746

Body Control System Schematics (BCM Inputs and Outputs - 3 of 3)

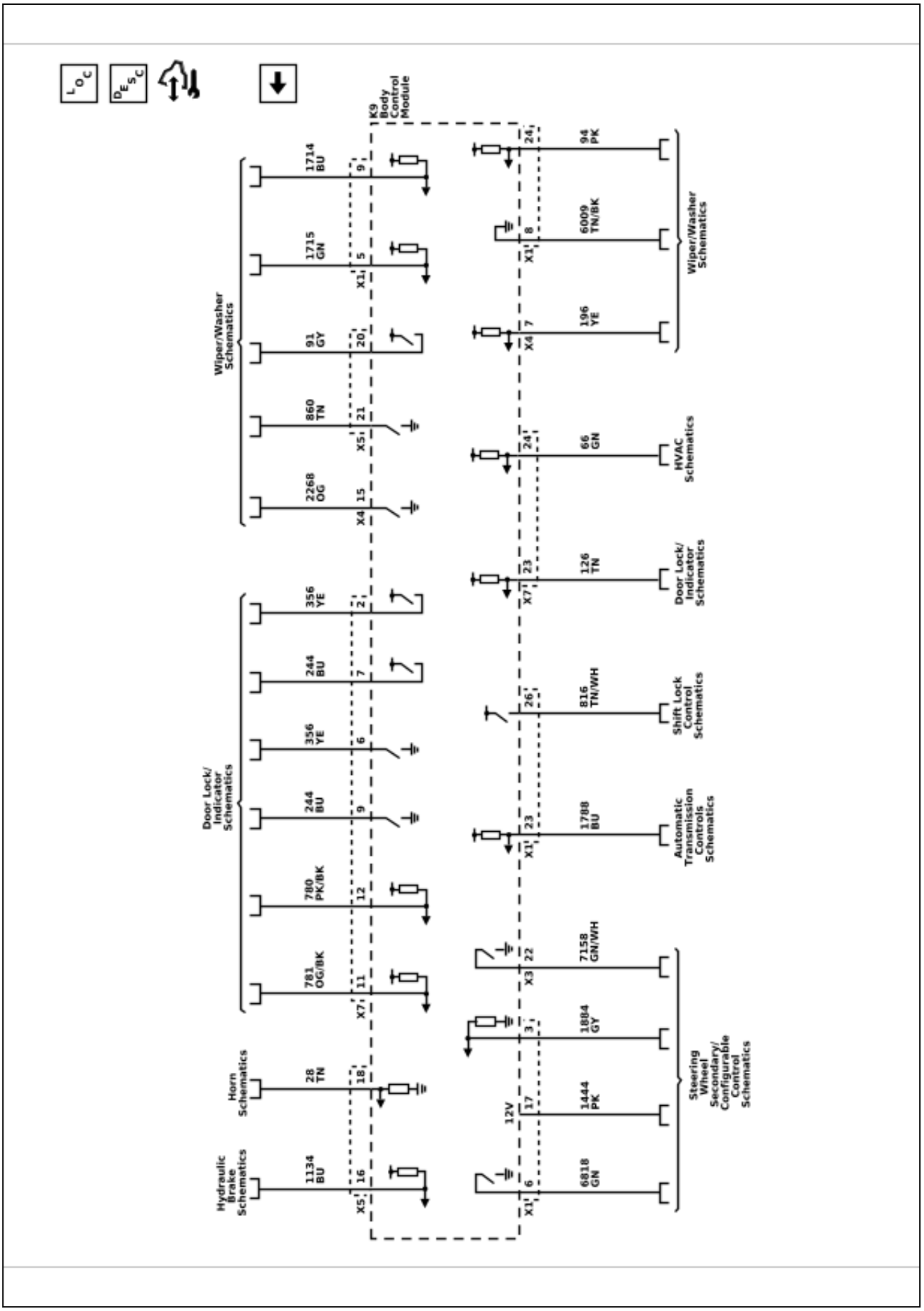

7085747

Repair Instructions

Body Control Module Replacement

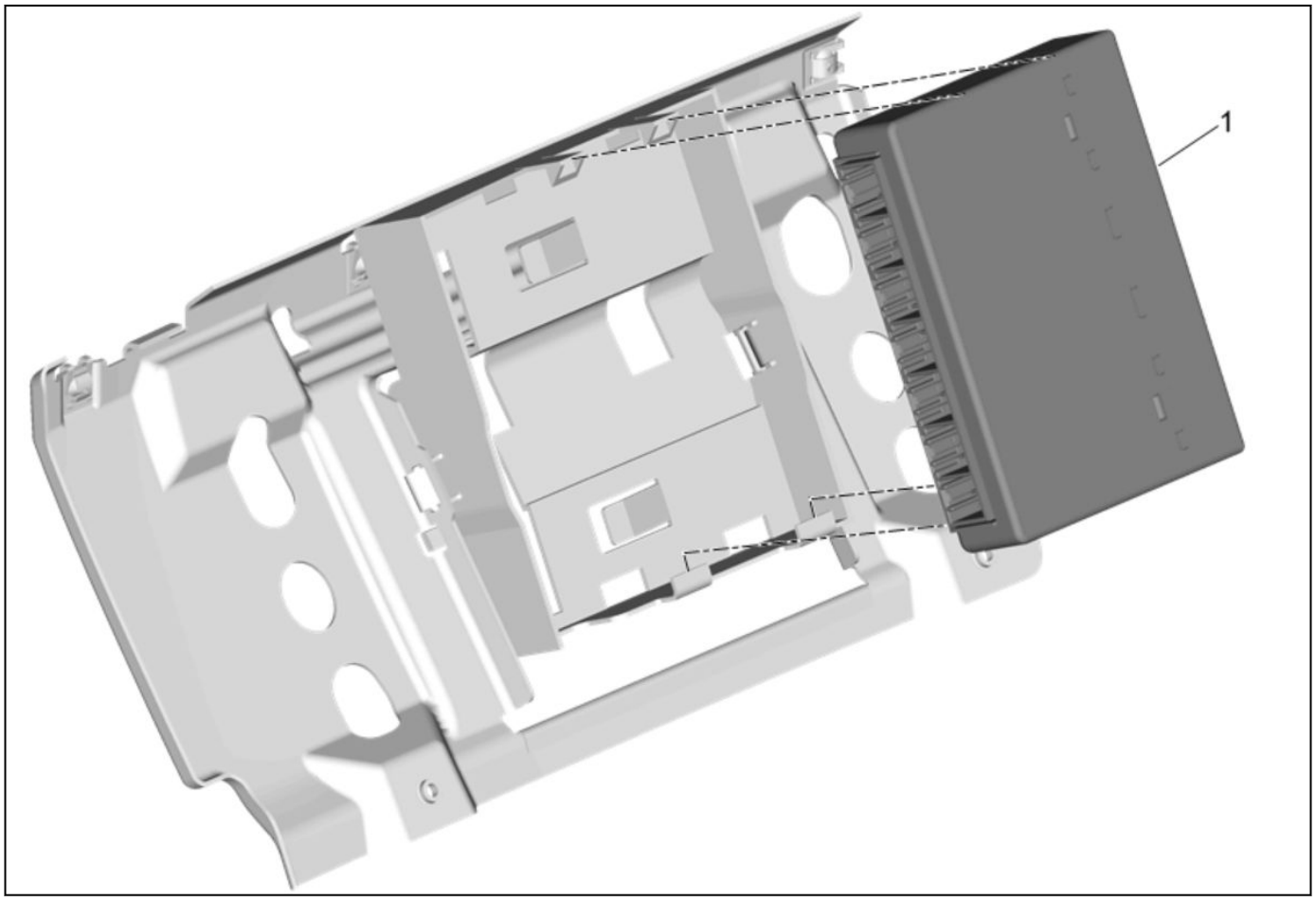

4851849

Body Control Module Replacement

Callout	Component Name
Preliminary Procedure Remove the instrument panel knee bolster bracket - right side. [Link target (target-id 294380-) not found]	
1	Body Control Module **Procedure** 1. Release the retaining tabs. 2. Perform the necessary programming and setup procedures: [Link target (target-id 72864-) not found]

Body Control Module Bracket Replacement

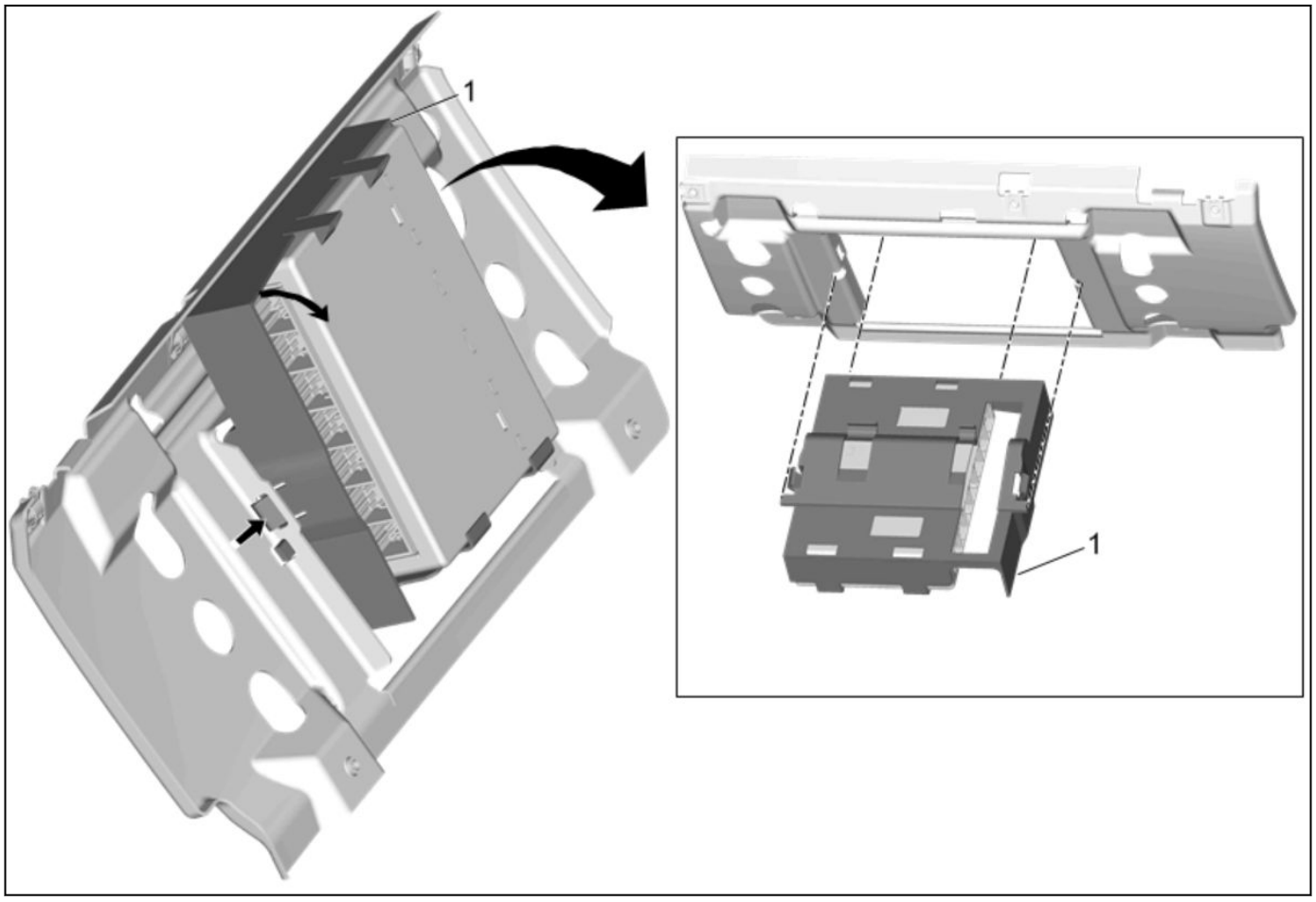

4851969

Body Control Module Bracket Replacement

Callout	Component Name
Preliminary Procedure Remove the instrument panel knee bolster bracket - right side. [Link target (target-id 294380-) not found]	
1	Body Control Module Bracket **Procedure** 1. Release the retaining tabs. 2. Transfer components as necessary.

Electrical Component and Inline Harness Connector End Views

Component Locator

X50A Fuse Block - Underhood Label

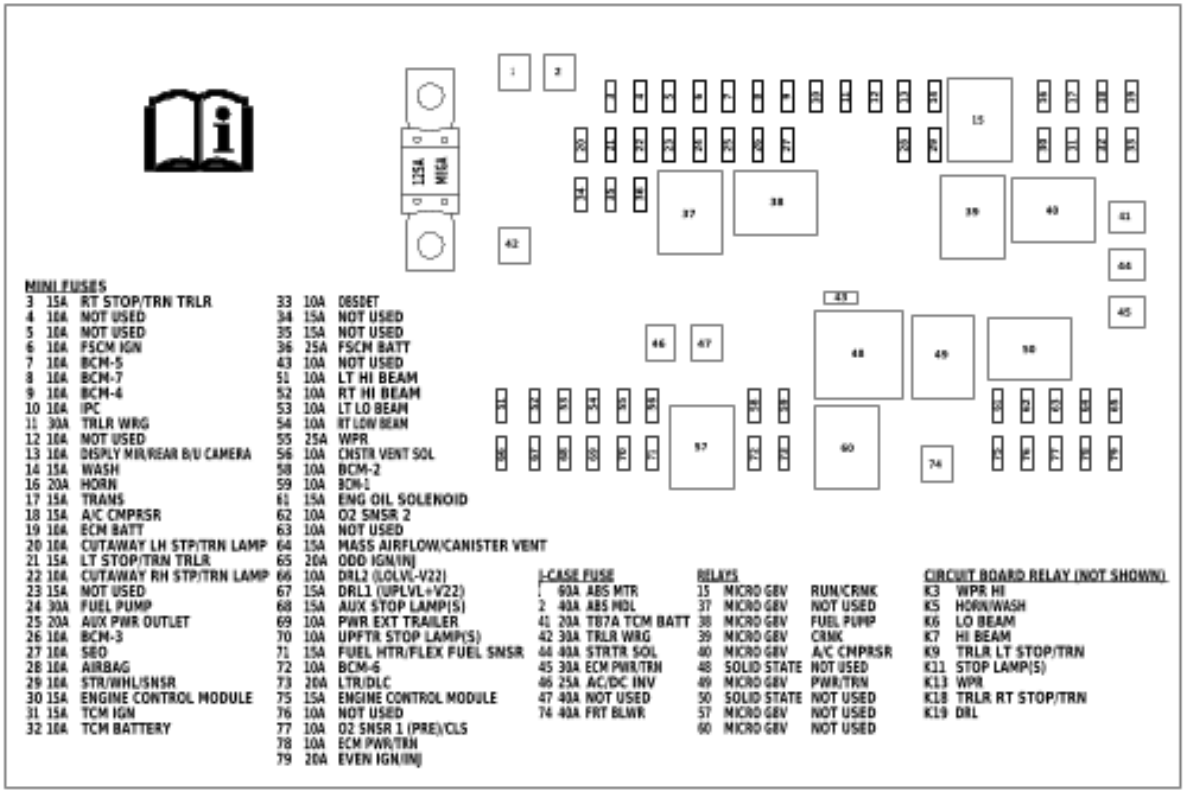

5702954

X50A Fuse Block - Underhood Top View

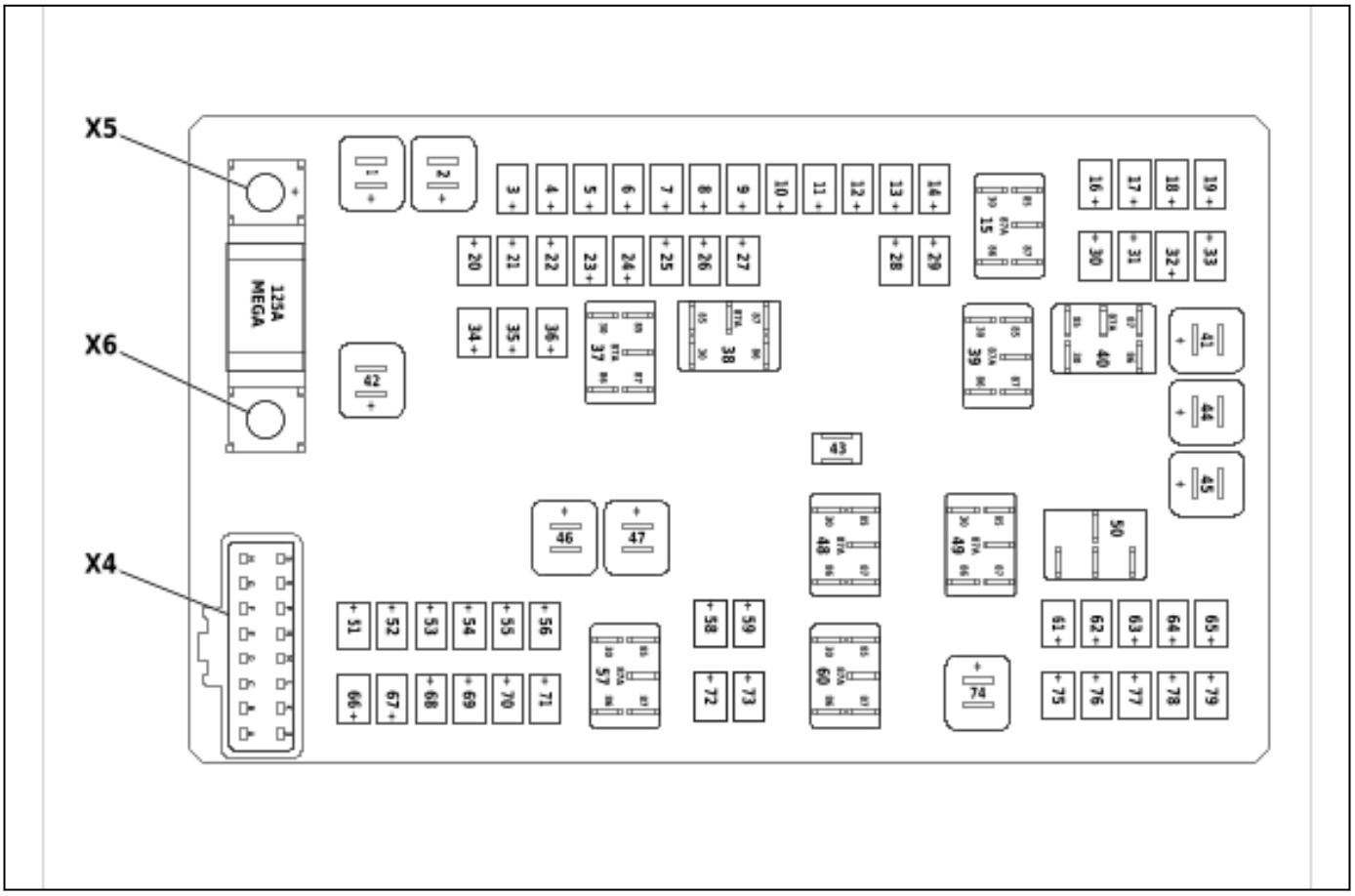

4846863

Usage Table

No.	Device Label Name	Device Assigned Name	Rating	Description
Mega Fuses				
MEGA	—	MEGA	125A	• X52A Fuse Block - Passenger Compartment
Mini Fuses				
3	RT STOP/TRN TRLR	F3UA	15A	• X88 Trailer Connector,
4	NOT USED	F4UA	10A	• Not Used
5	NOT USED	F5UA	10A	• Not Used
6	FSCM IGN	F6UA	10A	• K111 Fuel Pump Driver Control Module
7	BCM-5	F7UA	10A	• K9 Body Control Module
8	BCM-7	F8UA	10A	• K9 Body Control Module
9	BCM-4	F9UA	10A	• K9 Body Control Module
10	IPC	F10UA	10A	• P16 Instrument Cluster
11	TRLR WRG	F11UA	30A	• W8 Blunt Cut - Trailer Provision (UY7)
12	NOT USED	F12UA	10A	• Not Used
13	DISPLY MIR/REAR B/U CAMERA	F13UA	10A	• A10 Inside Rearview Mirror (UVC) • B87 Rearview Camera (UVC)
14	WASH	F14UA	15A	• G24 Windshield Washer Pump

No.	Device Label Name	Device Assigned Name	Rating	Description
16	HORN	F16UA	20A	• P13 Horn Assembly
17	TRANS	F17UA	15A	• Not Used
18	A/C CMPRSR	F18UA	15A	• Q2 A/C Compressor Clutch (C60)
19	ECM BATT	F19UA	10A	• K20 Engine Control Module
20	CUTAWAY LH STP/TRN LAMP	F20UA	10A	• X405
21	LT STOP/TRN TRLR	F21UA	15A	• X88 Trailer Connector
22	CUTAWAY RH STP/TRN LAMP	F22UA	10A	• X405
23	NOT USED	F23UA	20A	• Not Used
24	FUEL PUMP	F24UA	20A	• Not Used
25	AUX PWR OUTLET	F25UA	20A	• X80B Accessory Power Receptacle - Center Console 2
26	BCM-3	F26UA	10A	• K9 Body Control Module
27	SEO	F27UA	10A	• Not Used
28	AIRBAG	F28UA	10A	• K36 Inflatable Restraint Sensing and Diagnostic Module • S40 Passenger Air Bag Disable Switch (C99)
29	STR/WHL/SNSR	F29UA	10A	• Not Used
30	ENGINE CONTROL MODULE	F30UA	15A	• K20 Engine Control Module
31	TCM IGN	F31UA	15A	• K71 Transmission Control Module (M5U) • T12 Automatic Transmission Assembly (MYD)
32	TCM BATTERY	F32UA	10A	• T12 Automatic Transmission Assembly
33	OBSDET	F33UA	10A	• B218L Side Object Sensor Module - Left (UFT) • B218R Side Object Sensor Module - Right (UFT) • K182 Parking Assist Control Module (UD7)
34	NOT USED	F34UA	15A	• X50A Fuse Block - Underhood • KR121B Reductant Control Module Relay 2
35	NOT USED	F35UA	15A	• Not Used
36	FSCM BATT	F36UA	25A	• K111 Fuel Pump Driver Control Module
43	NOT USED	F43UA	10A	• Not Used
51	LT HI BEAM	F51UA	10A	• E4E Headlamp - Left High Beam
52	RT HI BEAM	F52UA	10A	• E4F Headlamp - Right High Beam
53	LT LO BEAM	F53UA	10A	• E4G Headlamp - Left Low Beam
54	RT LO BEAM	F54UA	10A	• E4H Headlamp - Right Low Beam
55	WPR	F55UA	25A	• KR12B Windshield Wiper Relay
56	CNSTR VENT SOL	F56UA	10A	• Q13 Evaporative Emission Vent Solenoid Valve
58	BCM-2	F58UA	10A	• K9 Body Control Module
59	BCM-1	F59UA	10A	• K9 Body Control Module
61	ENG OIL SOLENOID	F61UA	15A	• Q44 Engine Oil Pressure Control Solenoid Valve (L8T)

No.	Device Label Name	Device Assigned Name	Rating	Description
62	O2 SNSR 2	F62UA	10A	• B52D Heated Oxygen Sensor - Bank 1 Sensor 2 • B52F Heated Oxygen Sensor - Bank 2 Sensor 2
63	NOT USED	F63UA	10A	• Not Used
64	MASS AIRFLOW/ CANISTER VENT	F64UA	15A	• B75C Multifunction Intake Air Sensor • Q12 Evaporative Emission Purge Solenoid Valve • K20 Engine Control Module
65	ODD IGN/INJ	F65UA	20A	• K20 Engine Control Module • T8A Ignition Coil 1 • T8C Ignition Coil 3 • T8E Ignition Coil 5 • T8G Ignition Coil 7 (L8T)
66	DRL2 (LOLVL-V22)	F66UA	10A	• Not Used
67	DRL1 (UPLVL+V22)	F67UA	15A	• E4G Headlamp - Left Low Beam
68	AUX STOP LAMP(S)	F68UA	15A	• X405 (Cutaway)
69	PWR EXT TRAILER	F69UA	10A	• W8 Blunt Cut - Trailer Provision (UY7)
70	UPFTR STOP LAMP(S)	F70UA	10A	• W25 Blunt Cut - Configurable Provision
71	FUEL HTR/FLEX FUEL SNSR	F71UA	15A	• Not Used
72	BCM-6	F72UA	10A	• K9 Body Control Module
73	LTR/DLC	F73UA	20A	• X80A Accessory Power Receptacle - Center Console 1 • X84 Data Link Connector
75	ENGINE CONTROL MODULE	F75UA	15A	• K20 Engine Control Module
76	NOT USED	F76UA	10A	• Not Used
77	O2 SNSR 1 (PRE)/CLS	F77UA	10A	• B52C Heated Oxygen Sensor - Bank 1 Sensor 1 • B52E Heated Oxygen Sensor - Bank 2 Sensor 1
78	ECM PWR/TRN	F78UA	10A	• Not Used
79	EVEN IGN/INJ	F79UA	20A	• K20 Engine Control Module • T8B Ignition Coil 2 • T8D Ignition Coil 4 • T8F Ignition Coil 6 • T8H Ignition Coil 8 (L8T)
J-Case Fuses				
1	ABS MTR	F1UA	60A	• K17 Electronic Brake Control Module
2	ABS MDL	F2UA	40A	• K17 Electronic Brake Control Module
41	T87A TCM BATT	F41UA	20A	• K71 Transmission Control Module (M5U)
42	TRLR WRG	F42UA	30A	• X88 Trailer Connector (UY7)
44	STRTR SOL	F44UA	40A	• M64 Starter Motor
45	ECM PWR/TRN	F45UA	30A	• K20 Engine Control Module
46	AC/DC INV	F46UA	25A	• T1 Accessory DC/AC Power Inverter Module (KI4)

No.	Device Label Name	Device Assigned Name	Rating	Description
47	FAN LO	F47UA	40A	• Not Used
74	FRT BLWR	F74UA	40A	• R3 Blower Motor Resistor
Relays				
15	RUN/CRNK	KR93 Ignition Run/ Crank Relay	—	• F6UA • F10UA • F12UA • F13UA • F17UA • F28UA • F29UA • F30UA • F31UA
37	NOT USED	KR150 Relay - Spare	—	• F23UA
38	FUEL PUMP	KR23A Fuel Pump Relay	—	• F24UA
39	CRNK	KR27 Starter Relay	—	• F44UA
40	A/C CMPRSR	KR29 A/C Compressor Clutch Relay	—	• F18UA
48	NOT USED	KR150 Relay - Spare	—	• Not Used
49	PWR/TRN	KR75 Engine Controls Ignition Relay	—	• F45UA • F61UA • F62UA • F63UA • F64UA • F65UA • F71UA • F75UA • F76UA • F77UA • F78UA • F79UA
50	NOT USED	KR150 Relay - Spare	—	• Not Used
57	NOT USED	KR150 Relay - Spare	—	• Not Used
60	NOT USED	KR150 Relay - Spare	—	• Not Used
Important: Relays listed below are non-serviceable Printed Circuit Board (PCB) relays and are internal to the block.				
K3	WPR HI	KR12C Windshield Wiper Speed Control Relay	—	• M75 Windshield Wiper Motor
K5	HORN/WASH	KR3 Horn Relay, KR11 Windshield Washer Pump Relay	—	• F14UA • F16UA

No.	Device Label Name	Device Assigned Name	Rating	Description
K6	LO BEAM	KR49 Headlamp Low Beam Relay	—	• F53UA • F54UA
K7	HI BEAM	KR48 Headlamp High Beam Relay	—	• F51UA • F52UA
K9	TRLR LT STOP/TRN	KR63L Trailer Stop/ Turn Signal Lamp Relay - Left	—	• F5UA • F20UA • F21UA
K11	STOP LAMP(S)	KR59 Stop Lamp Relay	—	• F68UA • F69UA • F70UA
K13	WPR	KR12B Windshield Wiper Relay	—	• KR12C Windshield Wiper Speed Control Relay
K18	TRLR RT STOP/TRN	KR63R Trailer Stop/ Turn Signal Lamp Relay - Right	—	• F3UA • F4UA • F22UA
K19	DRL	KR42 Daytime Running Lamps Relay	—	• F66UA • F67UA

X50A Fuse Block - Underhood Bottom View

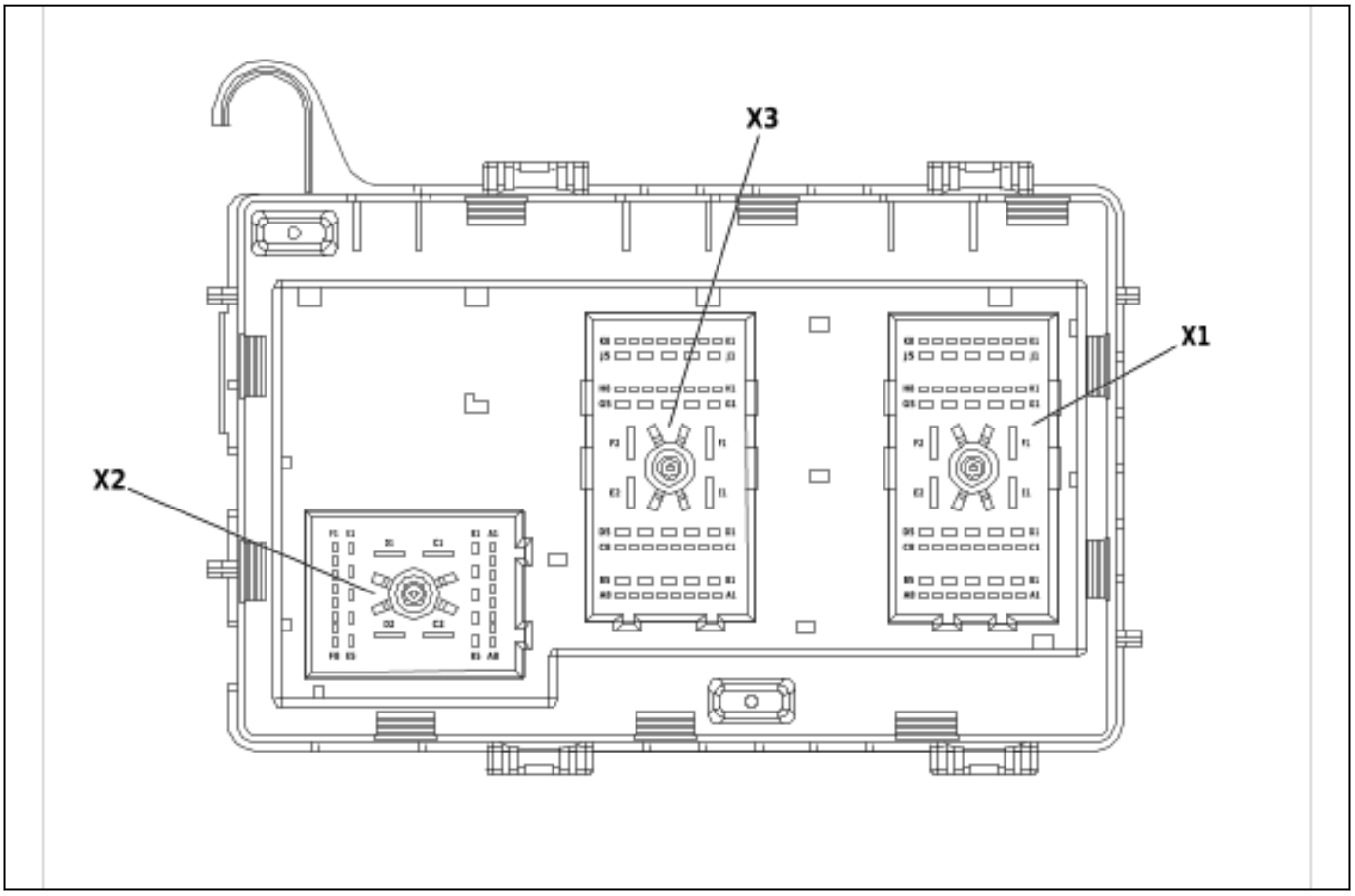

2832058

X50A Fuse Block - Underhood X1

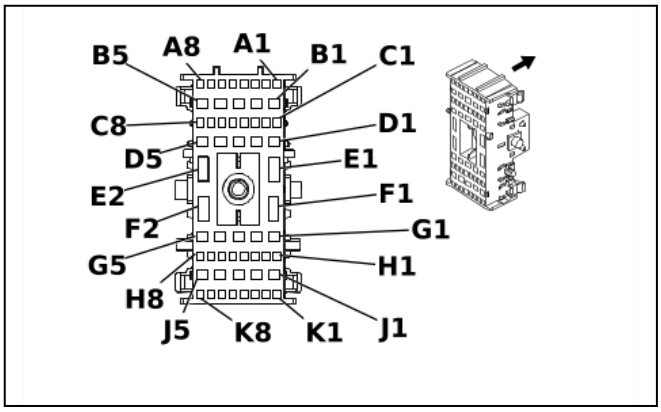

2083844

Connector Part Information

- Harness Type: Engine Wiring Harness
- OEM Connector: 15477823
- Service Connector: 13574911
- Description: 56-Way F 150, 280 GT Metri-Pack 800 Series(L-GY)

Terminal Part Information

Terminal Type ID	Terminated Lead	Diagnostic Test Probe	Terminal Removal Tool
I	13575355	J-35616-44 (YE)	J-38125-558
II	13575503	J-35616-4A (PU)	J-38125-215A
III	13575735	J-35616-14 (GN)	J-38125-215A
IV	13575753	J-35616-4A (PU)	J-38125-215A
V	13575754	J-35616-4A (PU)	J-38125-215A
VI	19300627	J-35616-14 (GN)	J-38125-215A
VII	19367554	J-35616-44 (YE)	J-38125-558

X50A Fuse Block - Underhood X1

Pin	Size	Color	Circuit	Function	Terminal Type ID	Option
A1	0.5	RD / WH	140	Battery Positive Voltage	VI	—
A2 - A8	—	—	—	Not Occupied	—	—
B1	0.5	RD / BU	840	Battery Positive Voltage	II	—
B2	0.5	BN / GN	59	Air Conditioning Compressor Clutch Control	II	—
B3	—	—	—	Not Occupied	—	—
B4	1	BN / GY	29	Horn Control	IV	—
B5	0.5	VT / GN	439	Run/Crank Ignition 1 Voltage	II	—
C1	—	—	—	Not Occupied	—	—
C2	0.5	WH / GY	459	Air Conditioning Compressor Clutch Relay Control	VI	—
C3 - C5	—	—	—	Not Occupied	—	—
C6	0.5	YE / BK	625	Starter Enable Relay Control	VI	—
C7	1	BK	1250	Ground	III	—
C8	—	—	—	Not Occupied	—	—

Pin	Size	Color	Circuit	Function	Terminal Type ID	Option
D1	1.5	RD / GN	1840	Battery Positive Voltage	V	—
D2	—	—	—	Not Occupied	—	—
D3	0.5	VT / BK	2139	Run/Crank Ignition 1 Voltage	II	—
D4 - D5	—	—	—	Not Occupied	—	—
E1	4	YE	6	Starter Solenoid Crank Ignition Voltage	VII	—
E2	—	—	—	Not Occupied	—	—
F1	2.5	VT / BU	5290	Powertrain Main Relay Fused Supply Voltage 1	I	—
F2	5	RD / PU	542	Battery Positive Voltage	VII	—
G1	0.75	VT / BU	5291	Powertrain Main Relay Fused Supply Voltage 2	IV	—
G2	1	VT / BU	5291	Powertrain Main Relay Fused Supply Voltage 2	IV	—
G3	—	—	—	Not Occupied	—	—
G4	0.75	VT / BU	5294	Powertrain Main Relay Fused Supply Voltage 5	IV	—
G5	0.5	VT / BU	5293	Powertrain Main Relay Fused Supply Voltage 4	II	—
H1 - H8	—	—	—	Not Occupied	—	—
J1	0.75	VT / BK	1239	Run/Crank Ignition 1 Voltage	IV	—
J2	1 1	VT / BU VT / BK	5292 1239	Powertrain Main Relay Fused Supply Voltage 3 Run/Crank Ignition 1 Voltage	IV IV	L8T LV1
J3	—	—	—	Not Occupied	—	—
J4	0.75	VT / BU	5291	Powertrain Main Relay Fused Supply Voltage 2	IV	—
J5	0.5	VT / BU	5293	Powertrain Main Relay Fused Supply Voltage 4	II	—
K1	0.5	VT / BU	5293	Powertrain Main Relay Fused Supply Voltage 4	VI	—
K2 - K3	—	—	—	Not Occupied	—	—
K4	0.5	VT / BU	5294	Powertrain Main Relay Fused Supply Voltage 5	VI	—
K5 - K7	—	—	—	Not Occupied	—	—
K8	0.5	YE	5991	Powertrain Relay Coil Control	VI	—

X50A Fuse Block - Underhood X2

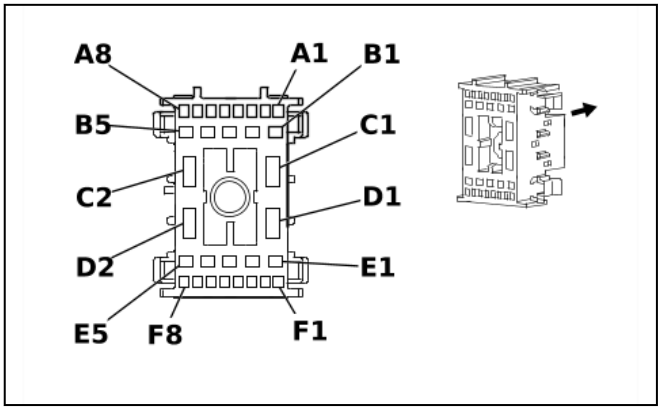

1665657

Connector Part Information

- Harness Type: Chassis Wiring Harness
- OEM Connector: 13567518
- Service Connector: 19180280
- Description: 30-Way F 150, 280 GT Metri-Pack 800 Series(BK)

Terminal Part Information

Terminal Type ID	Terminated Lead	Diagnostic Test Probe	Terminal Removal Tool
I	13575355	J-35616-44 (YE)	J-38125-558
II	13575790	J-35616-2A (GY)	J-38125-215A
III	19303704	J-35616-4A (PU)	J-38125-215A
IV	19303708	J-35616-4A (PU)	J-38125-215A
V	19367554	J-35616-44 (YE)	J-38125-558

X50A Fuse Block - Underhood X2

Pin	Size	Color	Circuit	Function	Terminal Type ID	Option
A1	—	—	—	Not Occupied	—	—
A2	1	YE	618	Left Rear Turn Signal Lamp Control	II	—
A3	0.75	BU / WH	149	Courtesy Lamp Control	II	—
A4	1	GN	619	Right Rear Turn Signal Lamp Control	II	—
A5	—	—	—	Not Occupied	—	—
A6	0.5	RD / BK	4042	Battery Positive Voltage	II	—
A7	1	BN	2109	Trailer Park Lamp Control	II	—
A8	0.5	VT	2739	Run/Crank Ignition 1 Voltage	II	—
B1 - B4	—	—	—	Not Occupied	—	—
B5	1	GN	1619	Right Rear Trailer Stop/Turn Lamp Control	III	—
C1	—	—	—	Not Occupied	—	—
C2	2.5	RD / VT	1640	Battery Positive Voltage	I	—
D1	3	RD / BK	742	Battery Positive Voltage	I	—
D2	5	RD / YE	442	Battery Positive Voltage	V	—
E1	—	—	—	Not Occupied	—	—
E2	0.75	BU	1320	Center High Mounted Stop Lamp Control 2	III	—
E3	3	BU	47	Trailer Auxiliary Control	IV	—
E4	1	YE	1618	Left Rear Trailer Stop/Turn Lamp Control	III	—
E5	2.5	RD / VT	1940	Battery Positive Voltage	IV	—
F1	1	GN	1624	Trailer Backup Lamp Control	II	—
F2	0.5	RD / GN	40	Battery Positive Voltage	II	—
F3	1	BN	2109	Trailer Park Lamp Control	II	—
F4 - F5	—	—	—	Not Occupied	—	—
F6	0.5	RD / BK	4042	Battery Positive Voltage	II	—
F7	1	GN	619	Right Rear Turn Signal Lamp Control	II	—
F8	1	YE	618	Left Rear Turn Signal Lamp Control	II	—

X50A Fuse Block - Underhood X3

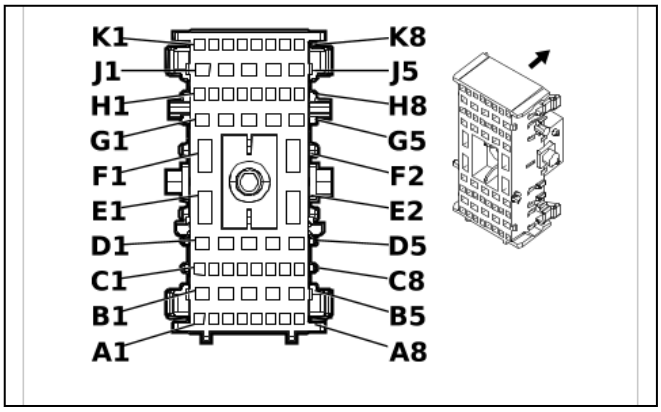

1581655

Connector Part Information

- Harness Type: Instrument Panel Wiring Harness
- OEM Connector: 15477822
- Service Connector: 19115189
- Description: 56-Way F 150, 280 GT Metri-Pack 800 Series(BK)

Terminal Part Information

Terminal Type ID	Terminated Lead	Diagnostic Test Probe	Terminal Removal Tool
I	13575355	J-35616-44 (YE)	J-38125-558
II	13575503	J-35616-4A (PU)	J-38125-215A
III	13575735	J-35616-14 (GN)	J-38125-215A
IV	13575753	J-35616-4A (PU)	J-38125-215A
V	13575754	J-35616-4A (PU)	J-38125-215A
VI	19300627	J-35616-14 (GN)	J-38125-215A

X50A Fuse Block - Underhood X3

Pin	Size	Color	Circuit	Function	Terminal Type ID	Option
A1	0.35	PK	1639	Run/Crank Ignition 1 Voltage	VI	—
A2	0.5	RD / WH	2840	Battery Positive Voltage	VI	—
A3	0.75	RD / WH	2240	Battery Positive Voltage	III	—
A4	0.75	RD / WH	3040	Battery Positive Voltage	III	—
A5	0.5	RD / WH	2540	Battery Positive Voltage	VI	—
A6	—	—	—	Not Occupied	—	—
A7	0.75	RD / WH	2740	Battery Positive Voltage	III	—
A8	—	—	—	Not Occupied	—	—
B1	3	RD / WH	3940	Battery Positive Voltage	V	—
B2	0.35	PK	1139	Run/Crank Ignition 1 Voltage	II	—
B3	0.35	PK	1139	Run/Crank Ignition 1 Voltage	II	—
B4	1	RD / WH	1040	Battery Positive Voltage	IV	—
B5	1	BN	2109	Trailer Park Lamp Control	IV	—
C1	0.5	PK	239	Run/Crank Ignition 1 Voltage	VI	—
C2 - C3	—	—	—	Not Occupied	—	—

Pin	Size	Color	Circuit	Function	Terminal Type ID	Option
C4	0.35	OG	5186	Left Trailer Turn Signal Lamp Control	VI	—
C5	1	BN	2109	Trailer Park Lamp Control	III	—
C6	1	GN	619	Right Rear Turn Signal Lamp Control	III	—
C7	0.75	BU / WH	149	Courtesy Lamp Control	III	—
C8	1	YE	618	Left Rear Turn Signal Lamp Control	III	—
D1	0.5	OG	228	Windshield Washer Pump Control	II	—
D2	0.35	YE	5199	Run/Crank Relay Coil Control	II	—
D3	1	GN	1624	Trailer Backup Lamp Control	IV	—
D4	3	BU	47	Trailer Auxiliary Control	V	—
D5 - E1	—	—	—	Not Occupied	—	—
E2	3	RD / WH	4140	Battery Positive Voltage	I	—
F1 - F2	—	—	—	Not Occupied	—	—
G1	0.75	RD / WH	640	Battery Positive Voltage	IV	—
G2	0.35	OG	2268	Windshield Washer Relay Control	II	—
G3	0.35	YE	5187	Right Trailer Turn Signal Lamp Control	II	—
G4	2	PU	92	Windshield Wiper Motor High Speed Control	V	—
G5	2	GN	95	Windshield Wiper Motor Low Speed Control	V	—
H1	—	—	—	Not Occupied	—	—
H2	1	RD / WH	3840	Battery Positive Voltage	III	—
H3	0.35	TN	28	Horn Relay Control	III	—
H4	0.35	PK / WH	1970	Headlamp Low Beam Relay Control	VI	—
H5	0.35	PU	544	DRL Relay Control	VI	—
H6	0.35	GY	91	Windshield Wiper Motor Relay Coil Control	VI	—
H7	0.5	WH	5065	Stop Lamp Relay Coil Control	VI	—
H8	0.35	TN	860	Windshield Wiper Switch High Signal	VI	—
J1	1	RD / WH	640	Battery Positive Voltage	IV	—
J2	0.75	RD / WH	2940	Battery Positive Voltage	IV	—
J3	0.75	GY / BN	2309	Front Park Lamp Control	IV	—
J4	0.75	BU / WH	1315	Right Front Turn Signal Lamp Control	IV	—
J5 - K2	—	—	—	Not Occupied	—	—
K3	0.75	RD / WH	2140	Battery Positive Voltage	III	—
K4	0.5	BU	20	Stop Lamp Control	VI	—
K5	0.5	BU / WH	6311	Cruise/ETC/TCC Brake Signal	VI	—
K6	—	—	—	Not Occupied	—	—
K7	0.75	BU / WH	1314	Left Front Turn Signal Lamp Control	III	—
K8	0.35	TN / WH	1969	Headlamp High Beam Relay Control	VI	—

X50A Fuse Block - Underhood X4

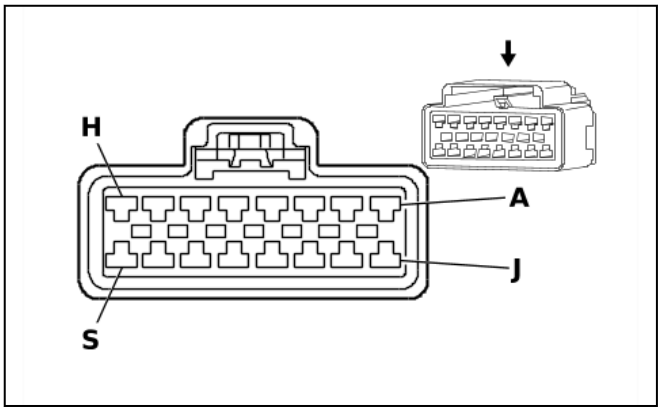

823321

Connector Part Information

- Harness Type: Forward Lamp Wiring Harness
- OEM Connector: 15326952
- Service Connector: 15306426
- Description: 16-Way F 280 GT Series, Sealed(BK)

Terminal Part Information

Terminal Type ID	Terminated Lead	Diagnostic Test Probe	Terminal Removal Tool
I	13575503	J-35616-4A (PU)	J-38125-215A
II	13575753	J-35616-4A (PU)	J-38125-215A

X50A Fuse Block - Underhood X4

Pin	Size	Color	Circuit	Function	Terminal Type ID	Option
A	—	—	—	Not Occupied	—	—
B	0.5	GY / BN	2309	Front Park Lamp Control	I	—
C	0.5	GY / BN	2309	Front Park Lamp Control	I	—
D	0.75	GN / VT	1315	Right Front Turn Signal Lamp Control	II	—
E	0.75	BU / WH	1314	Left Front Turn Signal Lamp Control	II	—
F	0.5	YE	712	Left Headlamp Low Beam Control	II	—
G - J	—	—	—	Not Occupied	—	—
K	0.5	YE	712	Left Headlamp Low Beam Control	I	—
L	—	—	—	Not Occupied	—	—
M	0.75	WH	311	Right Headlamp High Beam Control	II	—
N	0.75	WH	711	Left Headlamp High Beam Control	II	—
P	0.75	YE	312	Right Headlamp Low Beam Control	II	—
R - S	—	—	—	Not Occupied	—	—

X50A Fuse Block - Underhood X5

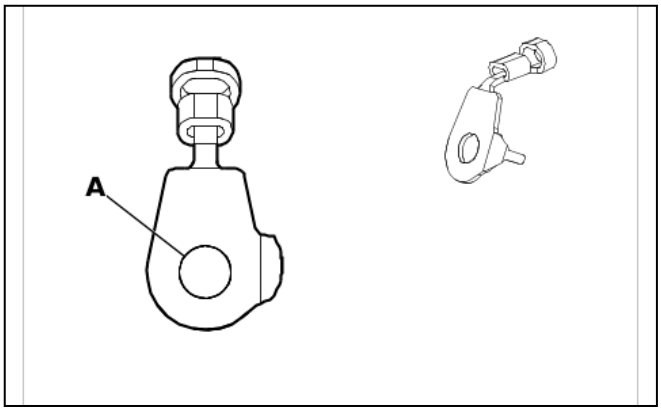

4831180

Connector Part Information
- Harness Type: Battery Positive Cable
- OEM Connector: 12160208
- Service Connector: Service by Cable Assembly — See Part Catalog
- Description: 1-Way Ring Terminal

Terminal Part Information

Terminal Type ID	Terminated Lead	Diagnostic Test Probe	Terminal Removal Tool
I	Not required	No Tool Required	No Tool Required

X50A Fuse Block - Underhood X5

Pin	Size	Color	Circuit	Function	Terminal Type ID	Option
A	19	RD	1	Unfused Battery Positive Voltage	I	—

X50A Fuse Block - Underhood X6

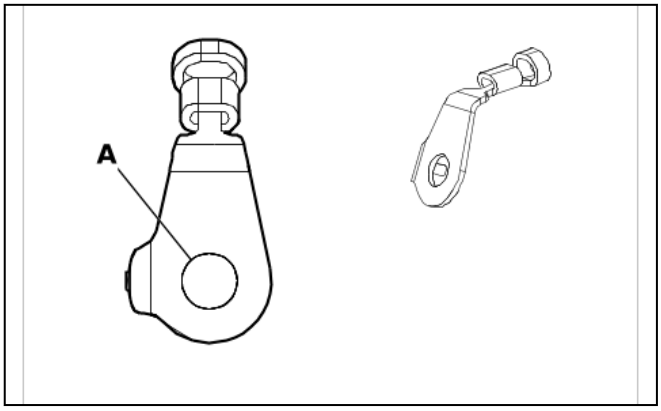

4831192

Connector Part Information
- Harness Type: Instrument Panel Wiring Harness
- OEM Connector: 13595106
- Service Connector: Service by Cable Assembly — See Part Catalog
- Description: 1-Way Ring Terminal

Terminal Part Information

Terminal Type ID	Terminated Lead	Diagnostic Test Probe	Terminal Removal Tool
I	Not required	No Tool Required	No Tool Required

X50A Fuse Block - Underhood X6

Pin	Size	Color	Circuit	Function	Terminal Type ID	Option
A	19	RD	842	Battery Positive Voltage	I	—

X50B Fuse Block - Underhood Auxiliary Top View

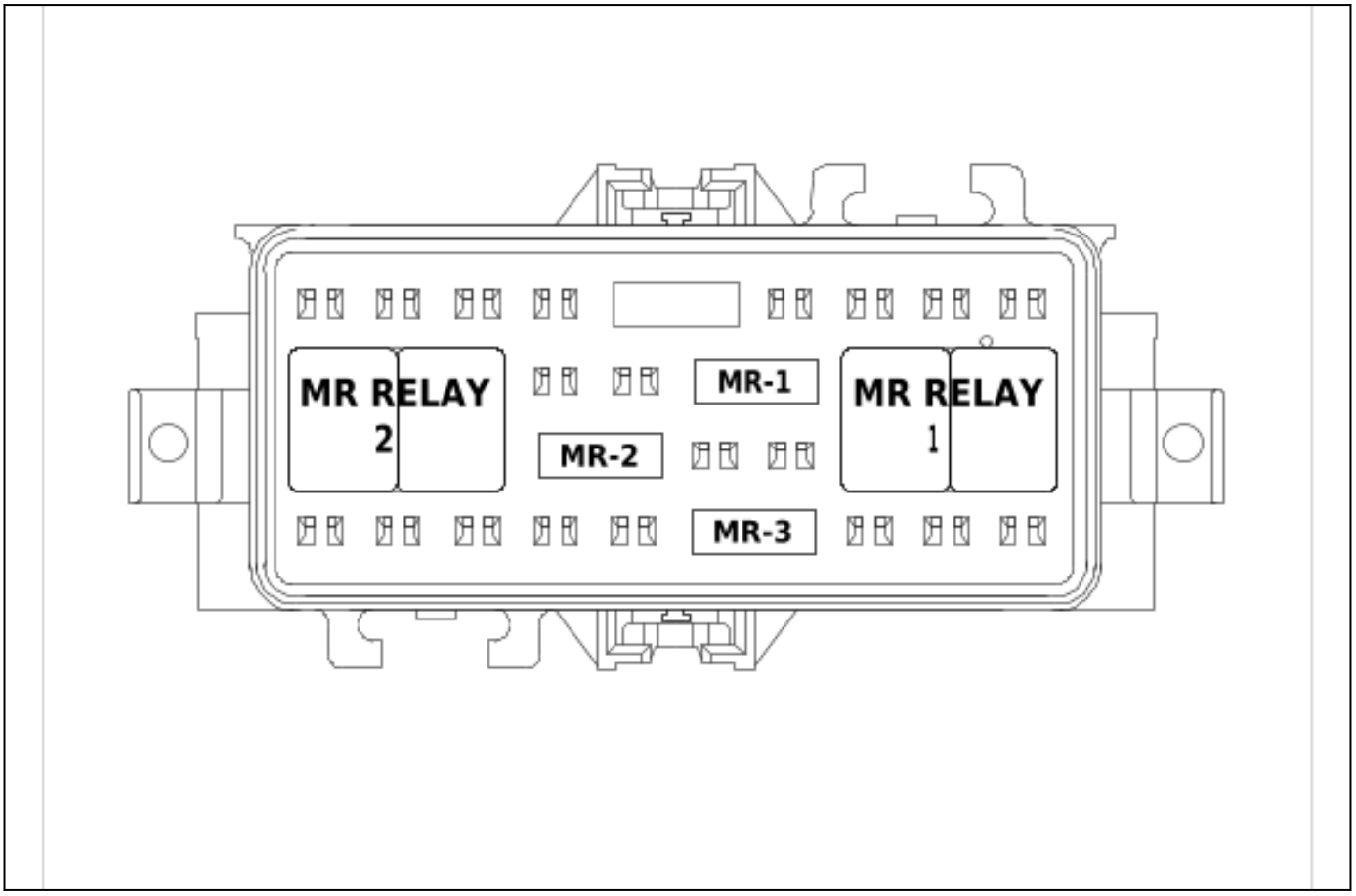

4845612

Usage Table

No.	Device Label Name	Device Assigned Name	Rating	Description
Fuses				
F1	MR-2	F1UB	30A	• KR161A Configurable Provision Relay 1 (9L7)
F2	MR-1	F2UB	30A	• KR161B Configurable Provision Relay 2 (9L7)
F3	MR-3	F3UB	10A	• W25 Blunt Cut - Configurable Provision (9L7)
Relays				

No.	Device Label Name	Device Assigned Name	Rating	Description
R1	MR RELAY 1	KR90 Door Unlock Relay (WRF), KR161B Configurable Provision Relay 2 (9L7)	—	• W25 Blunt Cut - Configurable Provision
R2	MR RELAY 2	KR97 Door Lock Relay (WRF), KR161A Configurable Provision Relay 1 (9L7)	—	• W25 Blunt Cut - Configurable Provision

X50B Fuse Block - Underhood Auxiliary

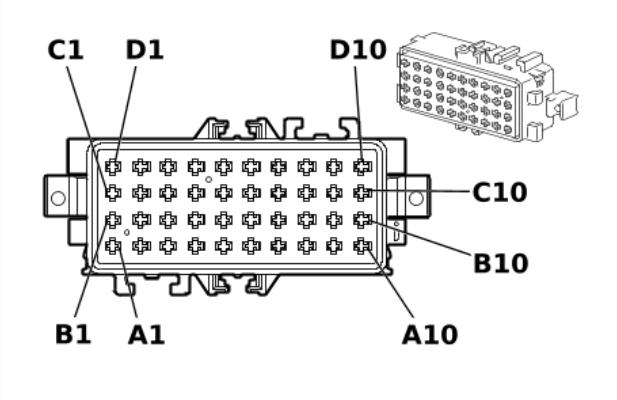

2002692

Connector Part Information
- Harness Type: Accessory Wiring Harness
- OEM Connector: 1587335-1
- Service Connector: Service by Harness - See Part Catalog
- Description: 40-Way F 2.8 MCP Series, Sealed(BK)

Terminal Part Information

Terminal Type ID	Terminated Lead	Diagnostic Test Probe	Terminal Removal Tool
I	Not required	J-35616-35 (VT)	No Tool Required
II	Not required	J-35616-4A (PU)	No Tool Required

X50B Fuse Block - Underhood Auxiliary

Pin	Size	Color	Circuit	Function	Terminal Type ID	Option
A1 - A5	—	—	—	Not Occupied	—	—
A6	1	RD / BK	102	Battery Positive Voltage	II	—
A7	1	RD / WH	5440	Battery Positive Voltage	II	—
A8 - A10	—	—	—	Not Occupied	—	—
B1	2.5	RD / WH	5440	Battery Positive Voltage	I	—
B2	—	—	—	Not Occupied	—	—
B3	0.5	BU	6843	Auxiliary Device Relay 2 Control	II	—
B4	2.5	RD / BK	102	Battery Positive Voltage	I	—

Pin	Size	Color	Circuit	Function	Terminal Type ID	Option
B5	2.5	RD / WH	5440	Battery Positive Voltage	I	—
B6 - B7	—	—	—	Not Occupied	—	—
B8	2.5	RD / WH	5440	Battery Positive Voltage	I	—
B9	—	—	—	Not Occupied	—	—
B10	0.5	BU	6842	Auxiliary Device Relay 1 Control	II	—
C1	0.5	BK	1850	Ground	II	—
C2	—	—	—	Not Occupied	—	—
C3	2.5	GN	6840	Auxiliary Device 2 Switched Voltage	I	—
C4 - C5	—	—	—	Not Occupied	—	—
C6	2.5	RD / BK	102	Battery Positive Voltage	I	—
C7	2.5	RD / WH	5440	Battery Positive Voltage	I	—
C8	0.5	BK / WH	1551	Signal Ground	II	—
C9	—	—	—	Not Occupied	—	—
C10	2.5	GN	6839	Auxiliary Device 1 Switched Voltage	I	—
D1 - D10	—	—	—	Not Occupied	—	—

X52A Fuse Block - Passenger Compartment Label

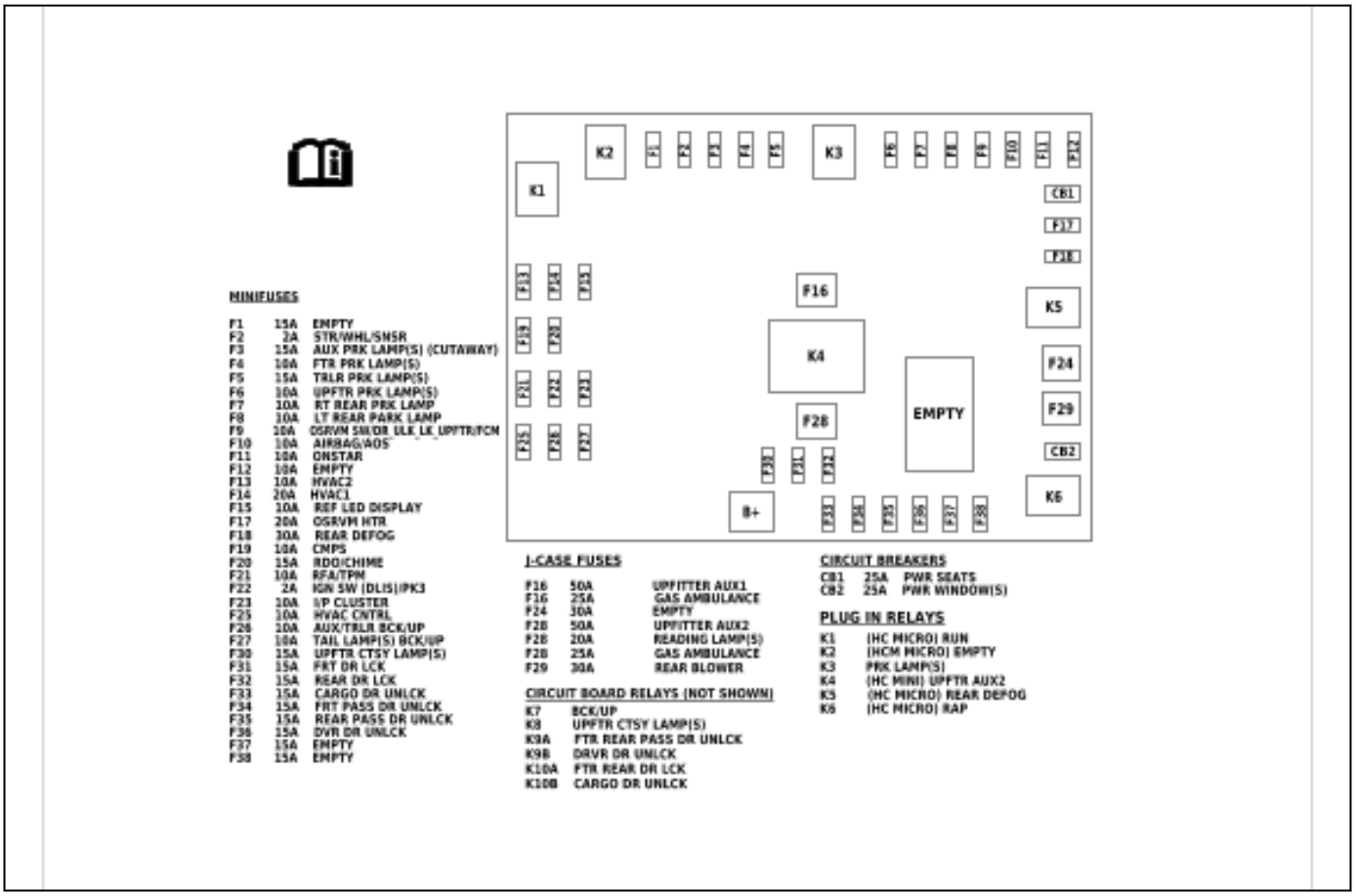

6511340

X52A Fuse Block - Passenger Compartment Top View

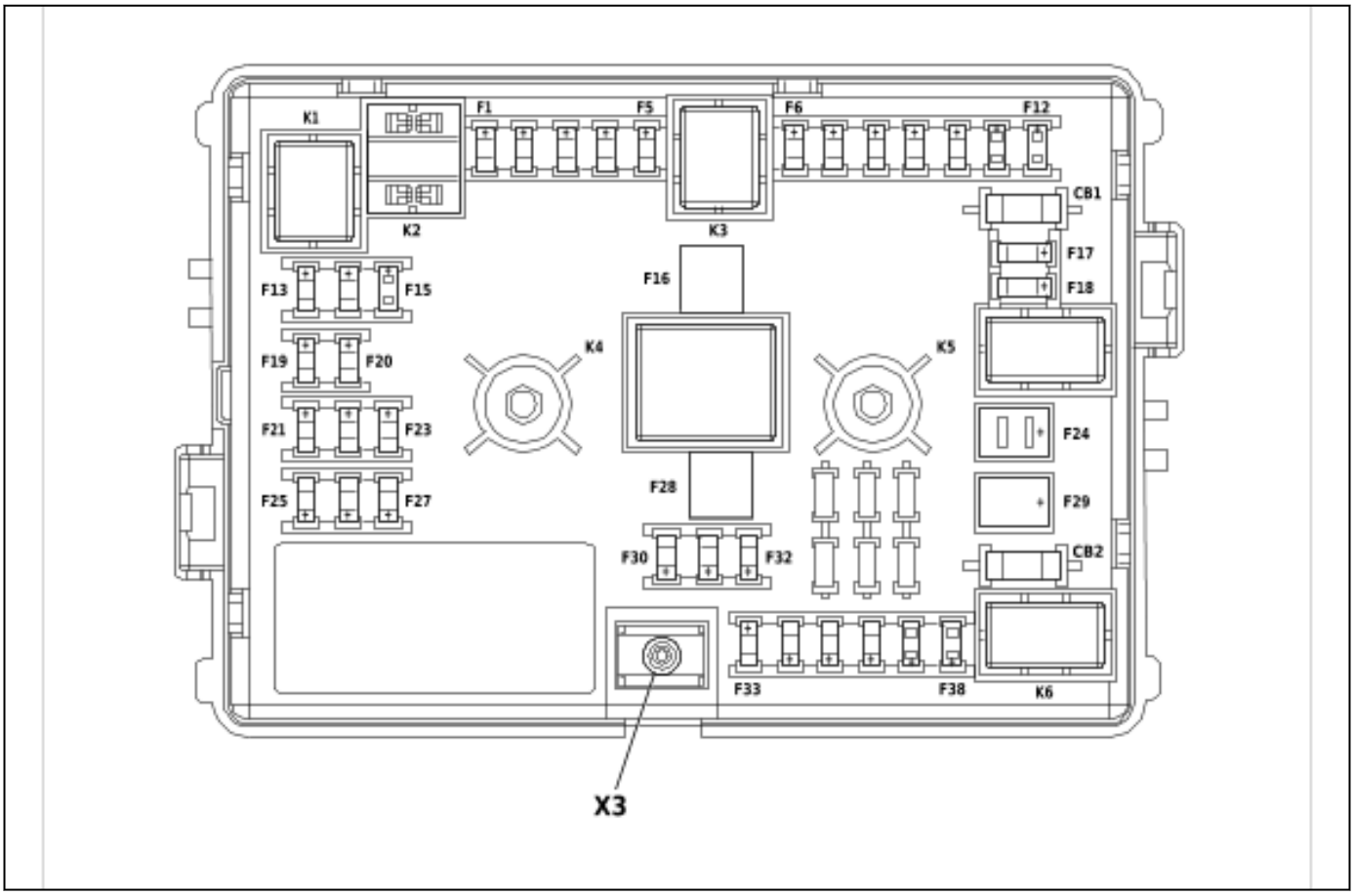

3988743

Usage Table

No.	Device Label Name	Device Assigned Name	Rating	Description
Mini Fuses				
F1	EMPTY	F1PA	15A	• Not Used
F2	STR/WHL/SNSR	F2PA	2A	• S70L Steering Wheel Controls Switch - Left (K34 or W1Y) • S70R Steering Wheel Controls Switch - Right (W1Y) • A11 Radio
F3	AUX PRK LAMP(S) (CUTAWAY)	F3PA	15A	• X405 (Cutaway)
F4	FRT PRK LAMP(S)	F4PA	10A	• E2LF Side Marker Lamp - Left Front • E2RF Side Marker Lamp - Right Front • E4N Park/Turn Signal Lamp - Left • E4P Park/Turn Signal Lamp - Right
F5	TRLR PRK LAMP(S)	F5PA	15A	• X88 Trailer Connector (UY7)
F6	UPFTR PRK LAMP(S)	F6PA	10A	• Not Used
F7	RT REAR PRK LAMP	F7PA	10A	• E5T Tail/Stop and Turn Signal Lamp - Right (Cargo or Passenger)

No.	Device Label Name	Device Assigned Name	Rating	Description
F8	LT REAR PARK LAMP	F8PA	10A	• E5S Tail/Stop and Turn Signal Lamp - Left (Cargo or Passenger) • E7 License Plate Lamp (Cargo or Passenger)
F9	OSRVM SW/ DR_ULK_LK_UPFT R/FCM	F9PA	10A	• B174W Frontview Camera - Windshield • S52 Outside Rearview Mirror Switch (DEB or DE5)
F10	AIRBAG/AOS	F10PA	10A	• K36 Inflatable Restraint Sensing and Diagnostic Module
F11	ONSTAR	F11PA	10A	• K73 Telematics Communication Interface Control Module (UE1)
F12	FRONT CAM MODULE	F12PA	10A	• Not Used
F13	HVAC2	F13PA	10A	• K33A HVAC Control Module - Auxiliary • KR32B Blower Motor High Speed Relay - Auxiliary (C69/C36/ENC) • KR32C Blower Motor Low Speed Relay - Auxiliary (C69/C36/ENC) • KR32D Blower Motor Medium Speed Relay - Auxiliary (C69/C36/ENC) • KR81 Auxiliary Battery Relay 1 (TP3) • M6 Air Temperature Door Actuator • M6B Air Temperature Door Actuator - Auxiliary (C69/C36/ENC) • M37B Mode Door Actuator - Auxiliary (C69/C36/ENC) • S34 HVAC Controls Switch Assembly (C49/DE5/C60) • S34F HVAC Controls Switch Assembly - Auxiliary Front • S34R HVAC Controls Switch Assembly - Auxiliary Rear (Rear HVAC Controls)
F14	HVAC1	F14PA	20A	• S34 HVAC Controls Switch Assembly • X81 Accessory Power Receptacle - 110V AC (KI4)
F15	REF LED DISPLAY	F15PA	10A	• P43 Collision Alert Indicators
F17	OSRVM HTR	F17PA	20A	• A9A Outside Rearview Mirror - Driver (DEB or DE5) • A9B Outside Rearview Mirror - Passenger (DEB or DE5)
F18	REAR DEFOG	F18PA	30A	• E18L Rear Defogger Grid - Left (C49) • E18R Rear Defogger Grid - Right (C49)
F19	CMPS	F19PA	10A	• B176 Multi-axis Acceleration Sensor Module • K18 Compass Module (U80)
F20	RDO/CHIME	F20PA	15A	• A11 Radio (Without UL5)
F21	RFA/TPM	F21PA	10A	• K77 Remote Control Door Lock Receiver (ATG or UJM)
F22	IGN SW (DLIS)/PK3	F22PA	2A	• K64 Content Theft Deterrent Control Module • S39 Ignition Switch
F23	I/P CLUSTER	F23PA	10A	• P16 Instrument Cluster
F25	HVAC CNTRL	F25PA	10A	• S34 HVAC Controls Switch Assembly (C49 or DE5)

No.	Device Label Name	Device Assigned Name	Rating	Description
F26	AUX/TRLR BCK/UP	F26PA	10A	• P3 Backup Alarm (8S3) • X88 Trailer Connector (-NE7) • X405 (Cutaway) • X450 (NE7)
F27	TAIL LAMP(S) BCK/UP	F27PA	10A	• E5A Backup Lamp - Left (Cargo or Passenger) • E5B Backup Lamp - Right (Cargo or Passenger)
F30	UPFTR CTSY LAMP(S)	F30PA	15A	• E36AC Dome Lamp - Left Roof Rail (Cargo) • E36AD Dome Lamp - Right Roof Rail (Cargo) • E36AH Dome Lamp (Cargo) • E37F Dome/Reading Lamps - Front • E37M Dome/Reading Lamps - Middle (Passenger) • E37R Dome/Reading Lamps - Rear (Passenger) • K9 Body Control Module • X405
F31	FRT DR LCK	F31PA	15A	• A23D Door Latch Assembly - Driver (AU3) • A23P Door Latch Assembly - Passenger (AU3)
F32	REAR DR LCK	F32PA	15A	• M13 Door Latch Assembly - Rear Cargo (Passenger or Cargo with AU3) • M14RR Door Lock Actuator - Right Rear (E24 or YA2) • X87RB Sliding Door Jamb Contact Plate - Right Body (E24 or YA2)
F33	CARGO DR UNLCK	F33PA	15A	• M13 Door Latch Assembly - Rear Cargo (Cargo or Passenger with AU3)
F34	FRT PASS DR UNLCK	F34PA	15A	• A23P Door Latch Assembly - Passenger (AU3)
F35	REAR PASS DR UNLCK	F35PA	15A	• KR90A Cargo Door Unlock Relay (AU3) • M14RR Door Lock Actuator - Right Rear (AU3) • X87RB Sliding Door Jamb Contact Plate - Right Body (AU3)
F36	DVR DR UNLCK	F36PA	15A	• A23D Door Latch Assembly - Driver (AU3)
F37	EMPTY	F37PA	15A	• Not Used
F38	EMPTY	F38PA	15A	• Not Used
J-Case Fuses				
F16	UPFITTER AUX1	F16PA	50A	• W12 Blunt Cut - Emergency Vehicle Provision (YF1)
F16	GAS AMBULANCE	F16PA	25A	• Not Used
F24	EMPTY	F24PA	30A	• Not Used
F28	UPFITTER AUX2	F28PA	50A	• W12 Blunt Cut - Emergency Vehicle Provision (YF1)
F28	READING LAMP(S)	F28PA	20A	• Not Used
F28	GAS AMBULANCE	F28PA	25A	• Not Used
F29	REAR BLOWER	F29PA	30A	• KR32B Blower Motor High Speed Relay - Auxiliary (C36/C69/ENC) • KR32C Blower Motor Low Speed Relay - Auxiliary (C36/C69/ENC) • KR32D Blower Motor Medium Speed Relay - Auxiliary (C36/C69/ENC)
Circuit Breakers				

No.	Device Label Name	Device Assigned Name	Rating	Description
CB1	PWR SEATS	CB1PA	25A	• S64D Seat Adjuster Switch - Driver (AG1) • S64P Seat Adjuster Switch - Passenger (AG2)
CB2	PWR WINDOW(S)	CB2PA	25A	• S79D Window Switch - Driver (A31) • S79P Window Switch - Passenger (A31)
Relays				
K1	RUN	KR74 Ignition Run Relay	—	• F13PA • F14PA • F15PA • F19PA • KR77 Ignition Power Provision Relay
K2	EMPTY	KR150 Relay - Spare	—	• Not Used
K3	PRK LAMP(S)	KR53 Park Lamps Relay	—	• F3PA • F4PA • F5PA • F6PA • F7PA • F8PA
K4	UPFTR AUX2	KR77 Ignition Power Provision Relay	—	• F28PA
K5	REAR DEFOG	KR5 Rear Defogger Relay	—	• F17PA • F18PA
K6	RAP	KR76 Retained Accessory Power Relay	—	• CB2PA • F37PA • F38PA
Important: Relays listed below are non-serviceable Printed Circuit Board (PCB) relays and are internal to the block.				
K7	BCK/UP	KR40 Backup Lamp Relay	—	• F26PA • F27PA
K8	UPFTR CTSY LAMP(S)	KR78 Courtesy Lamps Provision Relay	—	• F30PA
K9A	FTR REAR PASS DR UNLCK	KR90P Passenger/ Cargo Door Unlock Relay	—	• F34PA • F35PA
K9B	DRVR DR UNLCK	KR92D Driver Door Unlatch Relay	—	• F36PA
K10A	FTR REAR DR LCK	KR97 Door Lock Relay	—	• F31PA • F32PA
K10B	CARGO DR UNLCK	KR90A Cargo Door Unlock Relay	—	• F33PA

X52A Fuse Block - Passenger Compartment Bottom View

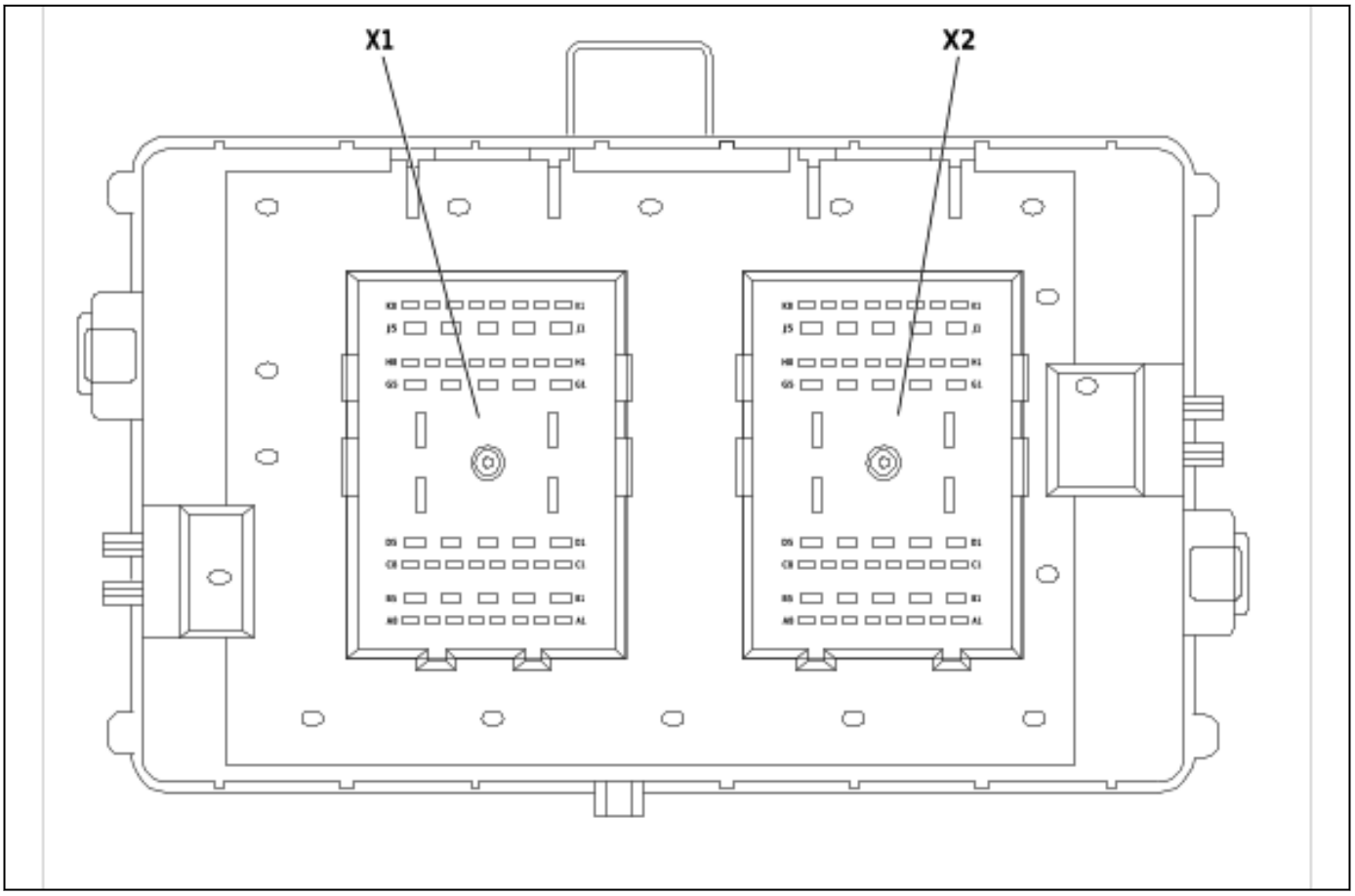

2832070

X52A Fuse Block - Passenger Compartment X1

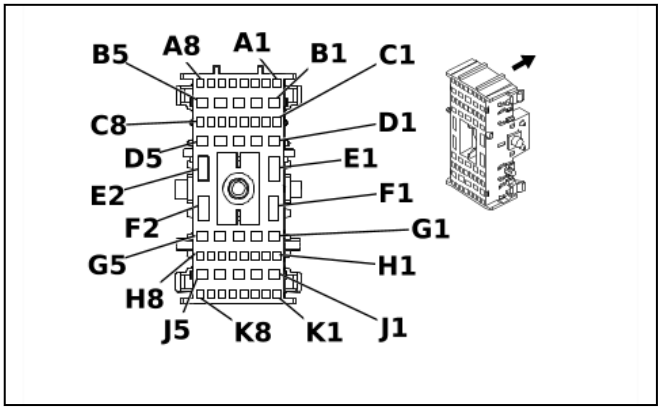

2083844

Connector Part Information

- Harness Type: Instrument Panel Wiring Harness
- OEM Connector: 15477823
- Service Connector: 13574911
- Description: 56-Way F 150, 280 GT Metri-Pack 800 Series(L-GY)

Terminal Part Information

Terminal Type ID	Terminated Lead	Diagnostic Test Probe	Terminal Removal Tool
I	13575465	J-35616-44 (YE)	J-38125-558
II	13575503	J-35616-4A (PU)	J-38125-215A
III	13575735	J-35616-14 (GN)	J-38125-215A
IV	13575753	J-35616-4A (PU)	J-38125-215A
V	13580060	J-35616-4A (PU)	J-38125-215A
VI	19300627	J-35616-14 (GN)	J-38125-215A

X52A Fuse Block - Passenger Compartment X1

Pin	Size	Color	Circuit	Function	Terminal Type ID	Option
A1 - A3	—	—	—	Not Occupied	—	—
A4	0.5	YE	6817	LED Backlight Dimming Control 1	VI	—
A5	0.35	BU	45	Park Lamp Relay Control	VI	—
A6	0.35	BN	6136	Control	VI	—
A7 - A8	—	—	—	Not Occupied	—	—
B1	0.75	RD / WH	3240	Battery Positive Voltage	IV	—
B2	1	BN	2109	Trailer Park Lamp Control	IV	—
B3	0.35	BN	341	Run Ignition 3 Voltage	II	—
B4	0.75	GY / BN	2309	Front Park Lamp Control	IV	—
B5	1	BN	2109	Trailer Park Lamp Control	IV	—
C1	1	YE	618	Left Rear Turn Signal Lamp Control	III	—
C2	0.35	BN / WH	230	Instrument Panel Lamp Dimming Control	VI	—
C3	1	GN	619	Right Rear Turn Signal Lamp Control	III	—
C4	0.35	WH	193	Rear Defogger Relay Control	VI	—
C5	0.35	BN	341	Run Ignition 3 Voltage	VI	—
C6	—	—	—	Not Occupied	—	—
C7	0.35	OG	300	Run Ignition 3 Voltage	VI	—
C8 - D3	—	—	—	Not Occupied	—	—
D4	0.5	VT / BK	1639	Run/Crank Ignition 1 Voltage	II	—
D5	0.5 1	BU BN	6807 141	DC/AC Inverter Control Run Ignition 3 Voltage	V	— —
E1	—	—	—	Not Occupied	—	—
E2	0.75	BK	350	Ground	I	—
F1 - G2	—	—	—	Not Occupied	—	—
G3	0.5 0.75	GY BU / WH	5861 1315	Passenger Side Object Detection LED Signal 1 Right Front Turn Signal Lamp Control	II IV	DE5 UFT
G4	1	RD / WH	340	Battery Positive Voltage	IV	—
G5	—	—	—	Not Occupied	—	—
H1	0.5 0.75	GY / YE BU / WH	5853 1314	Driver Side Side Object Detection LED Signal 1 Left Front Turn Signal Lamp Control	VI III	DE5 UFT
H2	0.75	BU / WH	149	Courtesy Lamp Control	III	—
H3	0.35	BK / WH	351	Signal Ground	VI	—

Pin	Size	Color	Circuit	Function	Terminal Type ID	Option
H4	0.35	YE	43	Accessory Ignition Voltage	VI	—
H5	0.75	RD / WH	4440	Battery Positive Voltage	III	—
H6	0.35	RD / WH	2840	Battery Positive Voltage	VI	—
H7	0.35	RD / WH	540	Battery Positive Voltage	VI	—
H8	0.5	RD / WH	5340	Battery Positive Voltage	VI	—
J1 - J4	—	—	—	Not Occupied	—	—
J5	1	GN	1624	Trailer Backup Lamp Control	IV	—
K1	—	—	—	Not Occupied	—	—
K2	0.5	YE	356	Driver Door Lock Relay Unlock Control	VI	—
K3	0.5	BU	244	Passenger Door Lock Switch Lock Control	VI	—
K4	0.5	BU	244	Passenger Door Lock Switch Lock Control	VI	—
K5	0.5	YE	356	Driver Door Lock Relay Unlock Control	VI	—
K6 - K7	—	—	—	Not Occupied	—	—
K8	0.35	BU	38	Backup Lamp Relay Control	VI	—

X52A Fuse Block - Passenger Compartment X2

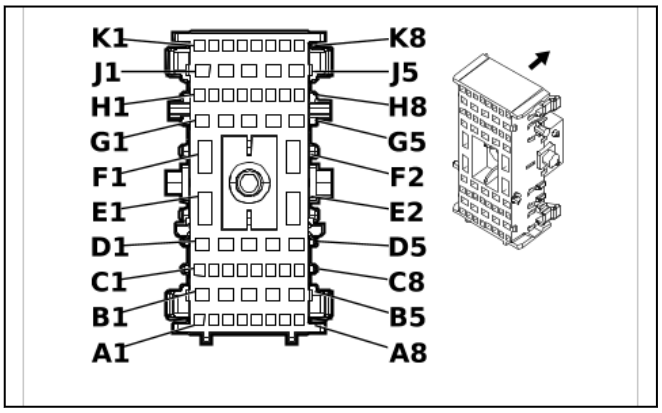

1581655

Connector Part Information

- Harness Type: Body Wiring Harness
- OEM Connector: 15477822
- Service Connector: 19115189
- Description: 56-Way F 150, 280 GT Metri-Pack 800 Series(BK)

Terminal Part Information

Terminal Type ID	Terminated Lead	Diagnostic Test Probe	Terminal Removal Tool
I	13575503	J-35616-4A (PU)	J-38125-215A
II	13575735	J-35616-14 (GN)	J-38125-215A
III	13575753	J-35616-4A (PU)	J-38125-215A
IV	13575754	J-35616-4A (PU)	J-38125-215A
V	13575756	J-35616-4A (PU)	J-38125-215A
VI	19300627	J-35616-14 (GN)	J-38125-215A
VII	19367554	J-35616-44 (YE)	J-38125-558

X52A Fuse Block - Passenger Compartment X2

Pin	Size	Color	Circuit	Function	Terminal Type ID	Option
A1 - A2	—	—	—	Not Occupied	—	—
A3	0.5	RD / WH	3440	Battery Positive Voltage	VI	—
A4	0.5	BN	2509	Left Rear Park Lamp Control	VI	—
A5	0.5	BN	2609	Right Rear Park Lamp Control	VI	—
A6	0.5 0.5	RD / GN RD / WH	3140 4340	Battery Positive Voltage Battery Positive Voltage	VI	— —
A7 - A8	—	—	—	Not Occupied	—	—
B1	3	RD / WH	3540	Battery Positive Voltage	IV	—
B2	3	RD / WH	3540	Battery Positive Voltage	IV	—
B3	1	RD / WH	3240	Battery Positive Voltage	III	—
B4	0.5	BN	2209	Rear Park Lamp Control	I	—
B5 - C1	—	—	—	Not Occupied	—	—
C2	1	RD / WH	3240	Battery Positive Voltage	II	—
C3	0.35	BN	341	Run Ignition 3 Voltage	VI	—
C4	0.35	BN	341	Run Ignition 3 Voltage	VI	—
C5	0.35	BN	341	Run Ignition 3 Voltage	VI	—
C6	1	GN	619	Right Rear Turn Signal Lamp Control	II	—
C7	1	YE	618	Left Rear Turn Signal Lamp Control	II	—
C8	0.35	BN / WH	230	Instrument Panel Lamp Dimming Control	VI	—
D1	5	PU	293	Rear Defogger Grid Control	V	—
D2	5	PU	293	Rear Defogger Grid Control	V	—
D3	0.75	OG	2267	Outside Rearview Mirror Heater Control	III	—
D4	0.75	OG	2267	Outside Rearview Mirror Heater Control	III	—
D5 - E1	—	—	—	Not Occupied	—	—
E2	5	RD / BK	1042	Battery Positive Voltage	VII	—
F1	5	RD / WH	1740	Battery Positive Voltage	VII	—
F2	5	BN	541	Run Ignition 3 Voltage	VII	—
G1	3	GN	1001	Retained Accessory Power Ignition Voltage	IV	—
G2	3	GN	1001	Retained Accessory Power Ignition Voltage	IV	—
G3	—	—	—	Not Occupied	—	—
G4	1	GY	295	Door Lock Actuator Lock Control	III	—
G5	1	GY	295	Door Lock Actuator Lock Control	III	—
H1	—	—	—	Not Occupied	—	—
H2	0.5	BK / BN	6045	Steering Angle Sensor Low Reference	VI	—
H3	0.5	BK / WH	351	Signal Ground	II	—
H4	—	—	—	Not Occupied	—	—
H5	0.5	BU / WH	1315	Right Front Turn Signal Lamp Control	VI	—
H6	0.5	BU / WH	1314	Left Front Turn Signal Lamp Control	VI	—
H7	0.5	BU / WH	149	Courtesy Lamp Control	VI	—

Pin	Size	Color	Circuit	Function	Terminal Type ID	Option
H8	0.5 0.75 1	BU / WH BU / WH BU / WH	149 149 149	Courtesy Lamp Control Courtesy Lamp Control Courtesy Lamp Control	VI II II	CARGO UPLIFTTTER & CUTAWAY CARGO - YF2 PASSENGER
J1	0.75	TN	694	Driver Door Lock Actuator Unlock Control	III	—
J2	1	TN	294	Door Lock Actuator Unlock Control	III	—
J3	0.75	TN	294	Door Lock Actuator Unlock Control	III	—
J4	0.75	TN	294	Door Lock Actuator Unlock Control	III	—
J5	0.75	GY	295	Door Lock Actuator Lock Control	IV	—
K1 - K2	—	—	—	Not Occupied	—	—
K3	1	TN / BK	1095	Right Rear Door Lock Actuator Unlock Control	II	—
K4 - K6	—	—	—	Not Occupied	—	—
K7	1	TN	294	Door Lock Actuator Unlock Control	II	—
K8	1	GN	24	Backup Lamp Control	II	—

X52A Fuse Block - Passenger Compartment X3

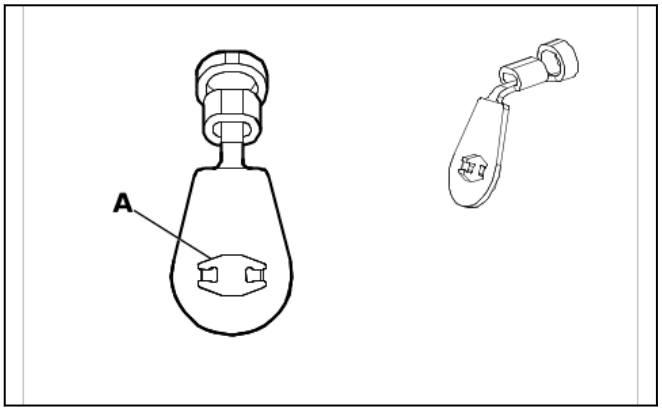

4831037

Connector Part Information

- Harness Type: Instrument Panel Wiring Harness
- OEM Connector: 12160241
- Service Connector: Service by Cable Assembly — See Part Catalog
- Description: 1-Way Ring Terminal

Terminal Part Information

Terminal Type ID	Terminated Lead	Diagnostic Test Probe	Terminal Removal Tool
I	Not required	No Tool Required	No Tool Required

X52A Fuse Block - Passenger Compartment X3

Pin	Size	Color	Circuit	Function	Terminal Type ID	Option
A	19	RD	842	Battery Positive Voltage	I	—

X55U Fuse Holder - Starter X1 (L8T)

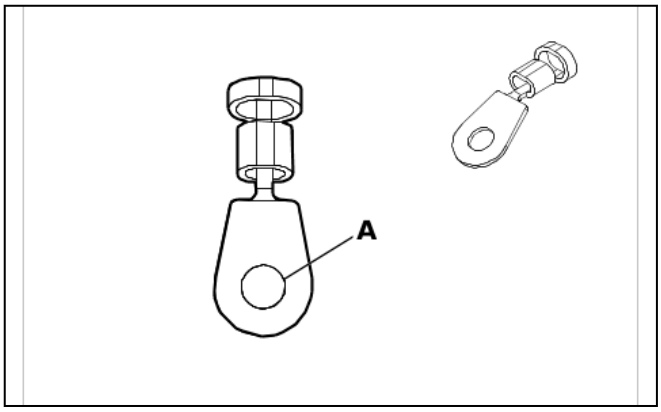

4329341

Connector Part Information
- Harness Type: Battery Positive Cable
- OEM Connector: 15491241
- Service Connector: Service by Cable Assembly — See Part Catalog
- Description: 1-Way Ring Terminal

Terminal Part Information

Terminal Type ID	Terminated Lead	Diagnostic Test Probe	Terminal Removal Tool
I	Not required	No Tool Required	No Tool Required

X55U Fuse Holder - Starter X1 (L8T)

Pin	Size	Color	Circuit	Function	Terminal Type ID	Option
A	32	RD	1	Unfused Battery Positive Voltage	I	—

X55U Fuse Holder - Starter X1 (LV1)

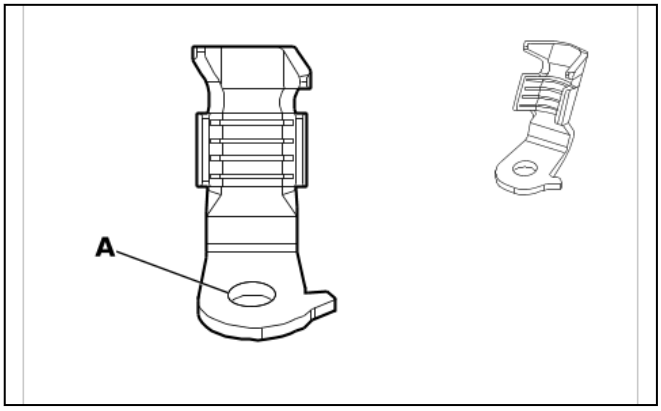

4937583

Connector Part Information
- Harness Type: Battery Positive Cable
- OEM Connector: 35116268
- Service Connector: Service by Cable Assembly — See Part Catalog
- Description: 1-Way Ring Terminal

Terminal Part Information

Terminal Type ID	Terminated Lead	Diagnostic Test Probe	Terminal Removal Tool
I	Not required	No Tool Required	No Tool Required

X55U Fuse Holder - Starter X1 (LV1)

Pin	Size	Color	Circuit	Function	Terminal Type ID	Option
A	32	RD	1	Unfused Battery Positive Voltage	I	—

X55U Fuse Holder - Starter X2 (L8T)

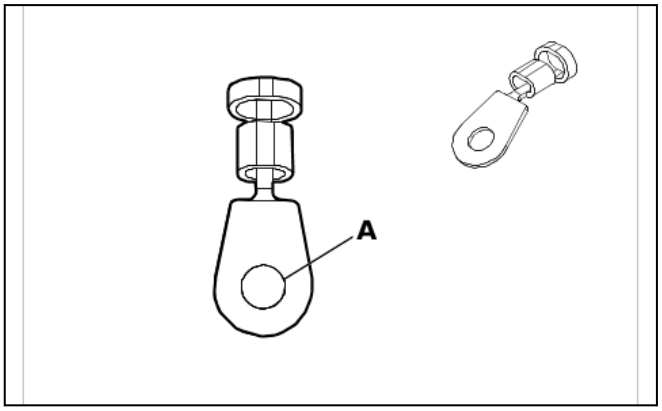

4329341

Connector Part Information

- Harness Type: Battery Positive Cable
- OEM Connector: 15491241
- Service Connector: Service by Cable Assembly — See Part Catalog
- Description: 1-Way Ring Terminal

Terminal Part Information

Terminal Type ID	Terminated Lead	Diagnostic Test Probe	Terminal Removal Tool
I	Not required	No Tool Required	No Tool Required

X55U Fuse Holder - Starter X2 (L8T)

Pin	Size	Color	Circuit	Function	Terminal Type ID	Option
A	32	RD	1	Unfused Battery Positive Voltage	I	—

X55U Fuse Holder - Starter X2 (LV1)

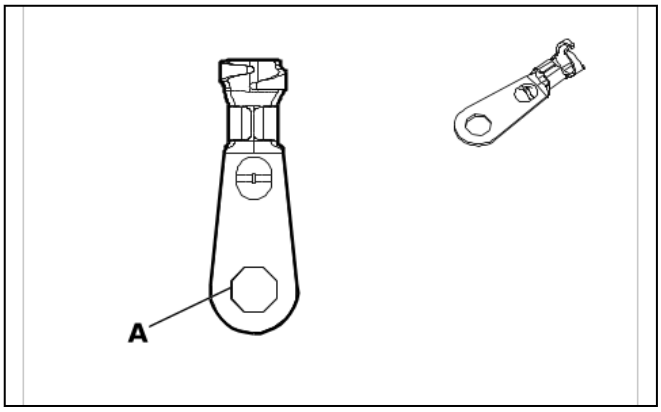

3214043

Connector Part Information
- Harness Type: Battery Positive Cable
- OEM Connector: 33257772
- Service Connector: Service by Cable Assembly — See Part Catalog
- Description: 1-Way Ring Terminal

Terminal Part Information

Terminal Type ID	Terminated Lead	Diagnostic Test Probe	Terminal Removal Tool
I	Not required	No Tool Required	No Tool Required

X55U Fuse Holder - Starter X2 (LV1)

Pin	Size	Color	Circuit	Function	Terminal Type ID	Option
A	25	RD	1	Unfused Battery Positive Voltage	I	—

A3L Sunshade - Left

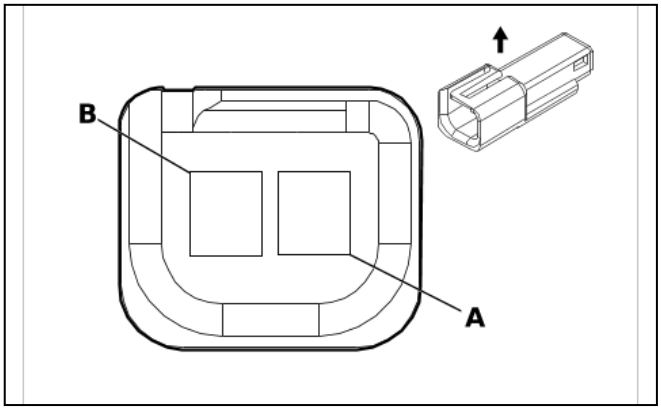

35441

Connector Part Information
- Harness Type: Roof Console Wiring Harness
- OEM Connector: 12047663
- Service Connector: 13584278
- Description: 2-Way M 150 Metri-Pack Series(BK)

Terminal Part Information

Terminal Type ID	Terminated Lead	Diagnostic Test Probe	Terminal Removal Tool
I	Not required	J-35616-3 (GY)	No Tool Required

A3L Sunshade - Left

Pin	Size	Color	Circuit	Function	Terminal Type ID	Option
A	0.5	OG	1732	Control Module 12V Reference 3	I	—
B	0.5	BK	1850	Ground	I	—

A3R Sunshade - Right

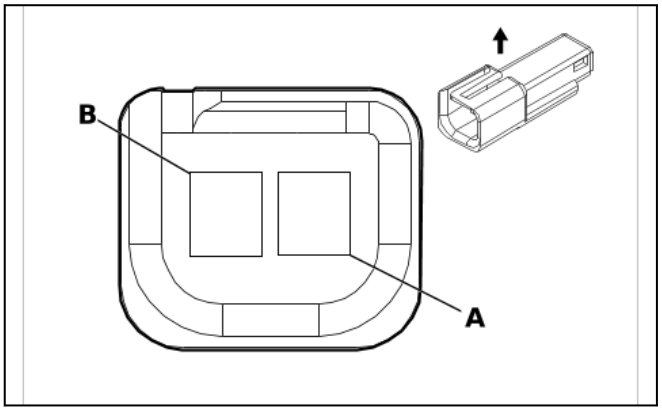

35441

Connector Part Information
- Harness Type: Roof Console Wiring Harness
- OEM Connector: 12047663
- Service Connector: 13584278
- Description: 2-Way M 150 Metri-Pack Series(BK)

Terminal Part Information

Terminal Type ID	Terminated Lead	Diagnostic Test Probe	Terminal Removal Tool
I	Not required	J-35616-3 (GY)	No Tool Required

A3R Sunshade - Right

Pin	Size	Color	Circuit	Function	Terminal Type ID	Option
A	0.5	OG	1732	Control Module 12V Reference 3	I	—
B	0.5	BK	1850	Ground	I	—

A7 Fuel Pump and Level Sensor Assembly

—

Connector Part Information
- Harness Type: Rear Window Defogger Wiring Harness
- OEM Connector: Not Available
- Service Connector: Service by Harness - See Part Catalog
- Description: 5-Way

Terminal Part Information

Terminal Type ID	Terminated Lead	Diagnostic Test Probe	Terminal Removal Tool
I	Not required	No Tool Required	No Tool Required

A7 Fuel Pump and Level Sensor Assembly

Pin	Size	Color	Circuit	Function	Terminal Type ID	Option
(1) 1	(1) —	(1) GY	(1) 120	(1) Fuel Pump Control	(1) I	(1) —
(2) 2	(2) —	(2) YE / GY	(2) 4137	(2) Fuel Pump Supply Voltage Phase 2	(2) I	(2) —
(3) 3	(3) —	(3) WH / BN	(3) 4138	(3) Fuel Pump Supply Voltage Phase 3	(3) I	(3) —
(4) 4	(4) —	(4) BK / GN	(4) 6281	(4) Fuel Level Sensor Low Reference	(4) I	(4) —
(5) 5	(5) —	(5) BU / VT	(5) 1589	(5) Primary Fuel Level Sensor Signal	(5) I	(5) —

A9A Outside Rearview Mirror - Driver

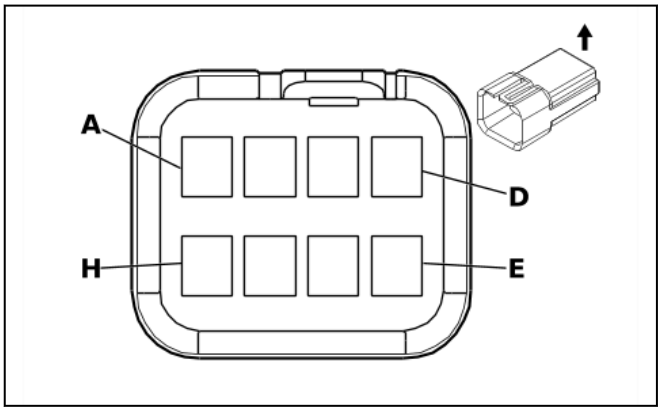

62434

Connector Part Information

- Harness Type: Front Side Door Door Wiring Harness - Driver
- OEM Connector: 12065396
- Service Connector: Service by Harness - See Part Catalog
- Description: 8-Way M 150 Metri-Pack Series(NA)

Terminal Part Information

Terminal Type ID	Terminated Lead	Diagnostic Test Probe	Terminal Removal Tool
I	Not required	J-35616-3 (GY)	No Tool Required

A9A Outside Rearview Mirror - Driver

Pin	Size	Color	Circuit	Function	Terminal Type ID	Option
A	0.75	BK	450	Ground	I	—
B	0.5	BU / WH	1314	Left Front Turn Signal Lamp Control	I	—
C	0.75	OG	2267	Outside Rearview Mirror Heater Control	I	—
D	0.5	BK	450	Ground	I	—
E	0.35	YE	88	Left Outside Rearview Mirror Motor Up Control	I	—

Pin	Size	Color	Circuit	Function	Terminal Type ID	Option
F	0.35	GN	89	Left Outside Rearview Mirror Motor Down Control	I	—
G	0.35	WH	81	Left Outside Rearview Mirror Motor Right Control	I	—
H	0.35	YE	88	Left Outside Rearview Mirror Motor Up Control	I	—

A9B Outside Rearview Mirror - Passenger

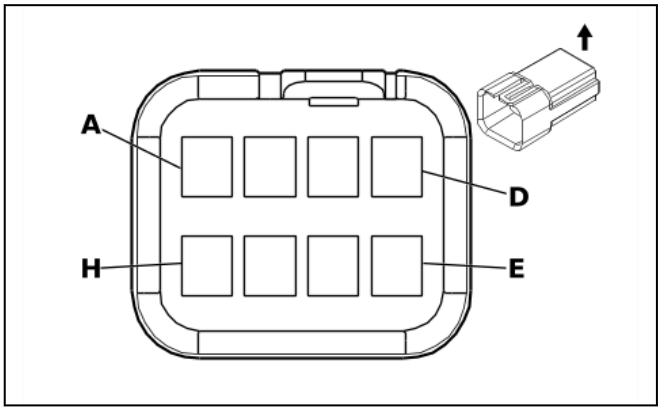

62434

Connector Part Information

- Harness Type: Front Side Door Door Wiring Harness - Passenger
- OEM Connector: 12162427
- Service Connector: Service by Harness - See Part Catalog
- Description: 8-Way M 150 Metri-Pack Series(NA)

Terminal Part Information

Terminal Type ID	Terminated Lead	Diagnostic Test Probe	Terminal Removal Tool
I	Not required	J-35616-3 (GY)	No Tool Required

A9B Outside Rearview Mirror - Passenger

Pin	Size	Color	Circuit	Function	Terminal Type ID	Option
A	0.75	BK	1850	Ground	I	—
B	0.5	BU / WH	1315	Right Front Turn Signal Lamp Control	I	—
C	0.75	OG	2267	Outside Rearview Mirror Heater Control	I	—
D	0.5	BK	1850	Ground	I	—
E	0.35	BN / WH	1498	Right Outside Rearview Mirror Motor Up Control	I	—
F	0.35	PU / WH	889	Right Outside Rearview Mirror Motor Down Control	I	—
G	0.35	OG / WH	881	Right Outside Rearview Mirror Motor Right Control	I	—
H	0.35	BN / WH	1498	Right Outside Rearview Mirror Motor Up Control	I	—

A10 Inside Rearview Mirror (- (UEU / UFL))

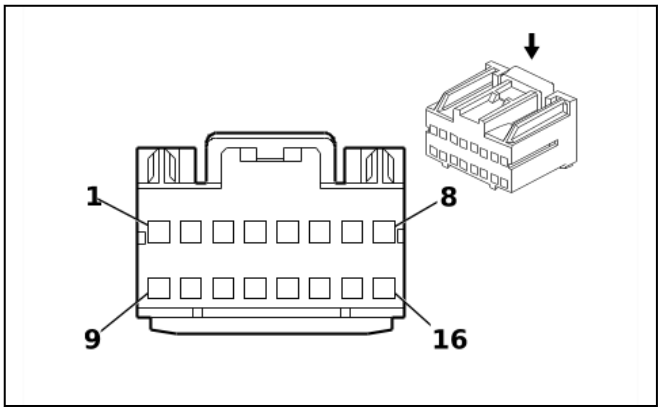

1711009

Connector Part Information

- Harness Type: Roof Console Wiring Harness
- OEM Connector: 13912218
- Service Connector: 13585682
- Description: 16-Way F 100A Micro Series(BK)

Terminal Part Information

Terminal Type ID	Terminated Lead	Diagnostic Test Probe	Terminal Removal Tool
I	13575546	J-35616-16 (L-GN)	J-38125-559

A10 Inside Rearview Mirror (- (UEU / UFL))

Pin	Size	Color	Circuit	Function	Terminal Type ID	Option
1 - 5	—	—	—	Not Occupied	—	—
(6) 6	(6) 0.5	(6) BU / YE	(6) 7641	(6) Frontview Camera 2 Signal [+]	(6) I	(6) —
(7) 7	(7) 0.5	(7) WH / YE	(7) 7642	(7) Frontview Camera 2 Signal [-]	(7) I	(7) —
(8) 8	(8) 0.5	(8) BK / WH	(8) 351	(8) Signal Ground	(8) I	(8) —
(9) 9	(9) 0.5	(9) GN / WH	(9) 24	(9) Backup Lamp Control	(9) I	(9) —
10 - 12	—	—	—	Not Occupied	—	—
(13) 13	(13) 0.5	(13) VT / WH	(13) 239	(13) Run/Crank Ignition 1 Voltage	(13) I	(13) —
14 - 16	—	—	—	Not Occupied	—	—

A10 Inside Rearview Mirror (UEU / UFL)

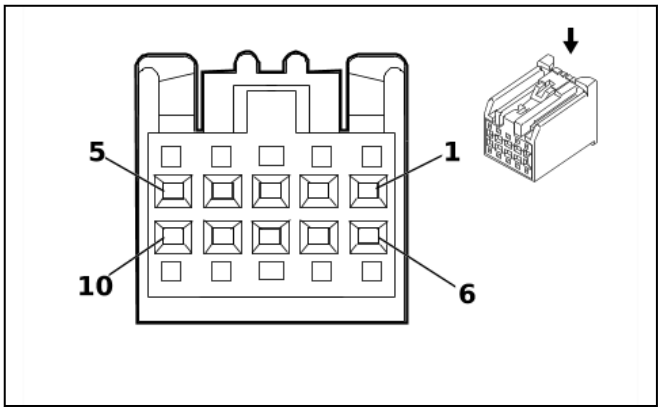

2180211

Connector Part Information

- Harness Type: Roof Console Wiring Harness
- OEM Connector: AIT2PB-10P-2AK
- Service Connector: 13577390
- Description: 10-Way F 0.64 Kaizen Series(BK)

Terminal Part Information

Terminal Type ID	Terminated Lead	Diagnostic Test Probe	Terminal Removal Tool
I	13575742	J-35616-64B (L-BU)	J-38125-215A

A10 Inside Rearview Mirror (UEU / UFL)

Pin	Size	Color	Circuit	Function	Terminal Type ID	Option
(1) 1	(1) 0.5	(1) GN / WH	(1) 24	(1) Backup Lamp Control	(1) I	(1) —
(2) 2	(2) 0.5	(2) VT / WH	(2) 239	(2) Run/Crank Ignition 1 Voltage	(2) I	(2) —
3 - 4	—	—	—	Not Occupied	—	—
(5) 5	(5) 0.5	(5) BK / WH	(5) 351	(5) Signal Ground	(5) I	(5) —
(6) 6	(6) 0.5	(6) BU / YE	(6) 7641	(6) Frontview Camera 2 Signal [+]	(6) I	(6) —
(7) 7	(7) 0.5	(7) WH / YE	(7) 7642	(7) Frontview Camera 2 Signal [-]	(7) I	(7) —
8 - 10	—	—	—	Not Occupied	—	—

A11 Radio X1

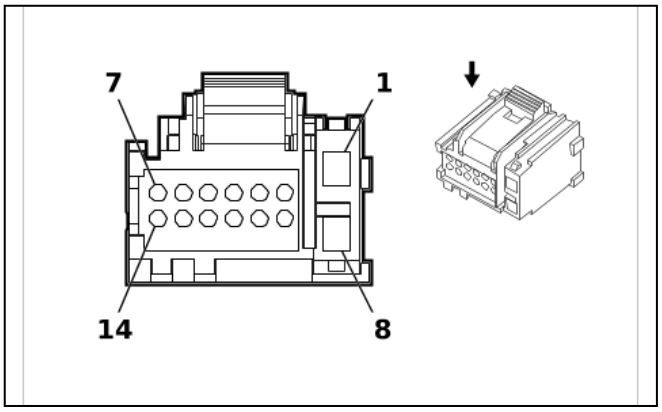

2684742

Connector Part Information

- Harness Type: Instrument Panel Wiring Harness
- OEM Connector: 13545675
- Service Connector: 13580448
- Description: 14-Way F 0.64 Micro-Pack, 150 GT Series(BK)

Terminal Part Information

Terminal Type ID	Terminated Lead	Diagnostic Test Probe	Terminal Removal Tool
I	13575735	J-35616-14 (GN)	J-38125-215A
II	13579976	J-35616-64B (L-BU)	J-38125-21
III	19370337	J-35616-64B (L-BU)	J-38125-21

A11 Radio X1

Pin	Size	Color	Circuit	Function	Terminal Type ID	Option
(1) 1	(1) 1	(1) RD / WH	(1) 340	(1) Battery Positive Voltage	(1) I	(1) —
(2) 2	(2) 0.75	(2) BU	(2) 1857	(2) Left Front Midrange Speaker [+] Control	(2) II	(2) —
(3) 3	(3) 0.75	(3) OG	(3) 1853	(3) Right Front Midrange Speaker [+] Control	(3) II	(3) —
4 - 6	—	—	—	Not Occupied	—	—
(7) 7	(7) 0.35	(7) YE	(7) 6817	(7) LED Backlight Dimming Control 1	(7) III	(7) —
(8) 8	(8) 1	(8) BK / WH	(8) 351	(8) Signal Ground	(8) I	(8) —
(9) 9	(9) 0.75	(9) BU	(9) 1957	(9) Left Front Midrange Speaker [-] Control	(9) II	(9) —
(10) 10	(10) 0.75	(10) GN	(10) 1953	(10) Right Front Midrange Speaker [-] Control	(10) II	(10) —
11 - 12	—	—	—	Not Occupied	—	—
(13) 13	(13) 0.35	(13) GN	(13) 5060	(13) Low Speed GMLAN Serial Data	(13) III	(13) —
14	—	—	—	Not Occupied	—	—

A11 Radio X2

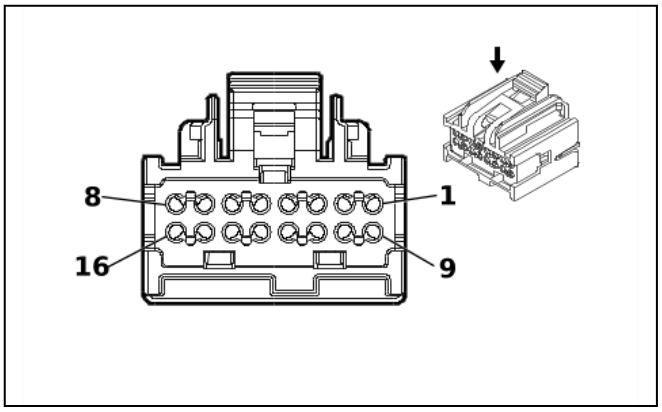

2127936

Connector Part Information

- Harness Type: Instrument Panel Wiring Harness
- OEM Connector: 13567860
- Service Connector: 13504130
- Description: 16-Way F 0.64 Micro-Series(PU)

Terminal Part Information

Terminal Type ID	Terminated Lead	Diagnostic Test Probe	Terminal Removal Tool
I	13579976	J-35616-64B (L-BU)	J-38125-21

A11 Radio X2

Pin	Size	Color	Circuit	Function	Terminal Type ID	Option
1 - 4	—	—	—	Not Occupied	—	—
(5) 5	(5) 0.75	(5) TN	(5) 1859	(5) Left Rear Midrange Speaker [+] Control	(5) I	(5) —
(6) 6	(6) 0.75	(6) TN	(6) 1855	(6) Right Rear Midrange Speaker [+] Control	(6) I	(6) —
(7) 7	(7) 0.75	(7) BU	(7) 658	(7) Cellular Telephone Voice Signal	(7) I	(7) —
8 - 12	—	—	—	Not Occupied	—	—
(13) 13	(13) 0.75	(13) WH	(13) 1959	(13) Left Rear Midrange Speaker [-] Control	(13) I	(13) —
(14) 14	(14) 0.75	(14) OG	(14) 1955	(14) Right Rear Midrange Speaker [-] Control	(14) I	(14) —
(15) 15	(15) 0.75	(15) BU / BK	(15) 659	(15) Cellular Telephone Voice Low Reference	(15) I	(15) —
16	—	—	—	Not Occupied	—	—

A11 Radio X3

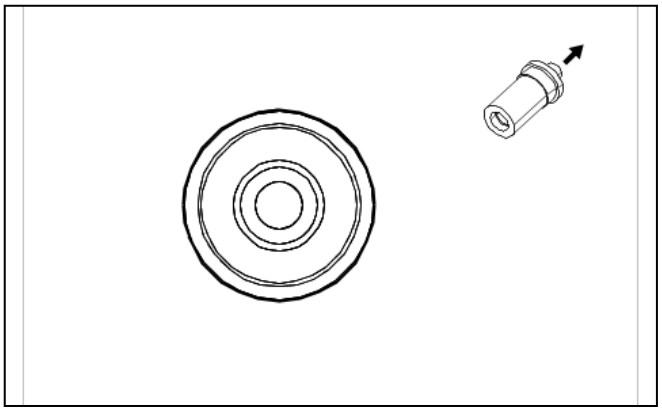

3264028

Connector Part Information
- Harness Type: Instrument Panel Wiring Harness COAX
- OEM Connector: 1438810-1
- Service Connector: Service by Cable Assembly — See Part Catalog
- Description: 1-Way F Snap Lock Coax Type(BK)

Terminal Part Information

Terminal Type ID	Terminated Lead	Diagnostic Test Probe	Terminal Removal Tool
I	Not required	No Tool Required	No Tool Required

A11 Radio X3

Pin	Size	Color	Circuit	Function	Terminal Type ID	Option
—	—	Coax Cable	—	(AM/FM) Antenna RF Signal	I	—

A23D Door Latch Assembly - Driver X1

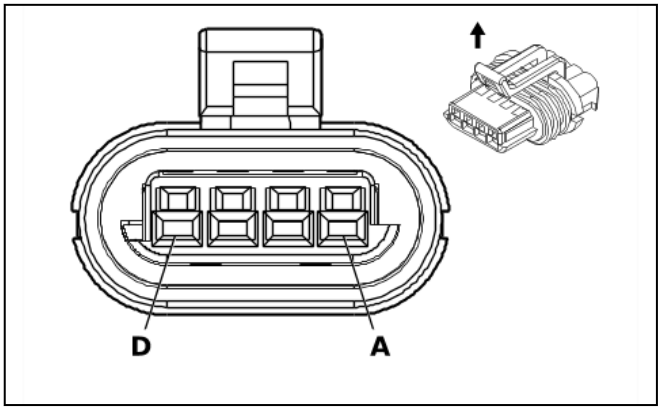

684948

Connector Part Information
- Harness Type: Front Side Door Door Wiring Harness - Driver
- OEM Connector: 15354716
- Service Connector: Service by Harness - See Part Catalog
- Description: 4-Way F 150 GT Series, Sealed(BK)

Terminal Part Information

Terminal Type ID	Terminated Lead	Diagnostic Test Probe	Terminal Removal Tool
I	Not required	J-35616-14 (GN)	No Tool Required

A23D Door Latch Assembly - Driver X1

Pin	Size	Color	Circuit	Function	Terminal Type ID	Option
A	0.35	TN	126	Left Front Door Open Switch Signal	I	—
B	0.35	GY / BK	745	Left Front Door Ajar Switch Signal	I	—
C	—	—	—	Not Occupied	—	—
D	0.35	BK	450	Ground	I	—

A23D Door Latch Assembly - Driver X2

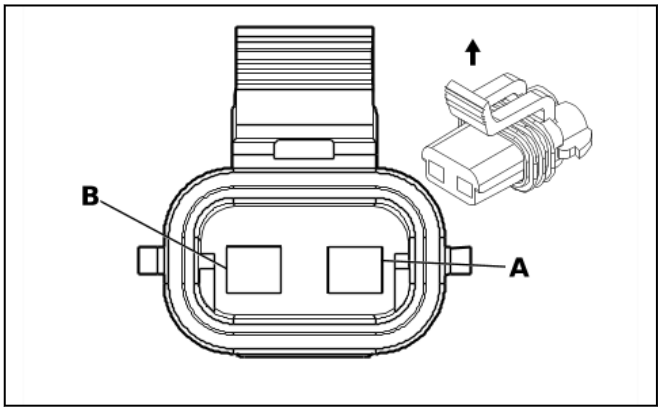

68721

Connector Part Information

- Harness Type: Front Side Door Door Wiring Harness - Driver
- OEM Connector: 15300027
- Service Connector: Service by Harness - See Part Catalog
- Description: 2-Way F 280 Metri-Pack Series, Sealed(BK)

Terminal Part Information

Terminal Type ID	Terminated Lead	Diagnostic Test Probe	Terminal Removal Tool
I	Not required	J-35616-4A (PU)	No Tool Required

A23D Door Latch Assembly - Driver X2

Pin	Size	Color	Circuit	Function	Terminal Type ID	Option
A	0.75	TN	694	Driver Door Lock Actuator Unlock Control	I	—
B	0.75	GY	295	Door Lock Actuator Lock Control	I	—

A23P Door Latch Assembly - Passenger X1

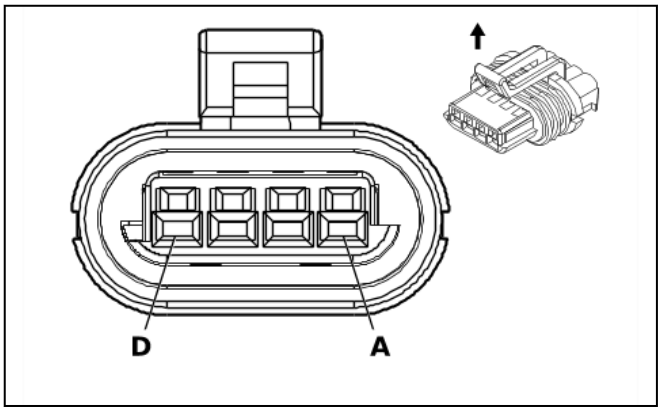

684948

Connector Part Information

- Harness Type: Front Side Door Door Wiring Harness - Passenger
- OEM Connector: 15354716
- Service Connector: Service by Harness - See Part Catalog
- Description: 4-Way F 150 GT Series, Sealed(BK)

Terminal Part Information

Terminal Type ID	Terminated Lead	Diagnostic Test Probe	Terminal Removal Tool
I	Not required	J-35616-14 (GN)	No Tool Required

A23P Door Latch Assembly - Passenger X1

Pin	Size	Color	Circuit	Function	Terminal Type ID	Option
A	0.35	BK	1850	Ground	I	—
B	—	—	—	Not Occupied	—	—
C	0.35	TN / WH	746	Right Front Door Ajar Switch Signal	I	—
D	0.35	GN	1177	Right Front Door Open Switch Signal	I	—

A23P Door Latch Assembly - Passenger X2

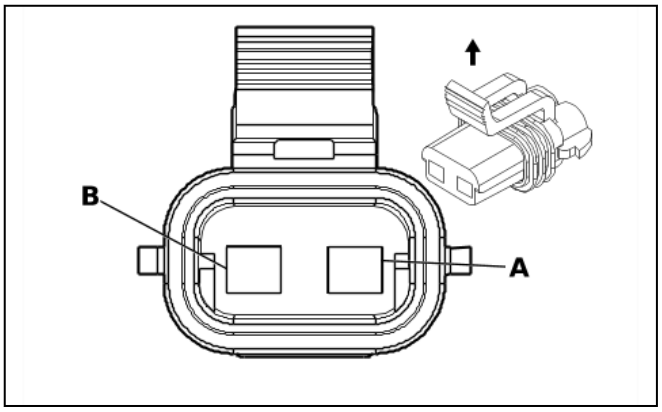

68721

Connector Part Information
- Harness Type: Front Side Door Door Wiring Harness - Passenger
- OEM Connector: 15300027
- Service Connector: Service by Harness - See Part Catalog
- Description: 2-Way F 280 Metri-Pack Series, Sealed(BK)

Terminal Part Information

Terminal Type ID	Terminated Lead	Diagnostic Test Probe	Terminal Removal Tool
I	Not required	J-35616-4A (PU)	No Tool Required

A23P Door Latch Assembly - Passenger X2

Pin	Size	Color	Circuit	Function	Terminal Type ID	Option
A	0.75	TN	294	Door Lock Actuator Unlock Control	I	—
B	0.75	GY	295	Door Lock Actuator Lock Control	I	—

B1 A/C Refrigerant Pressure Sensor

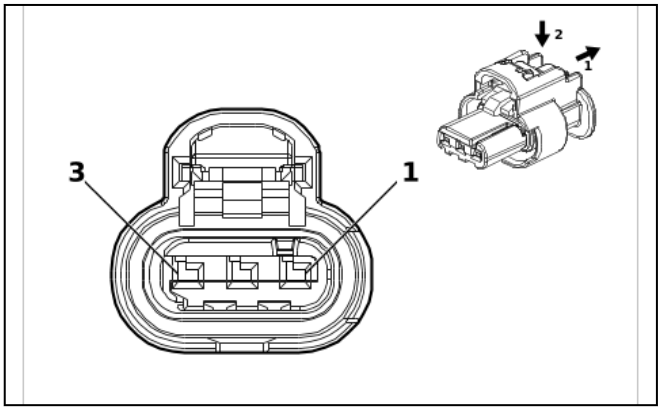

4581126

Connector Part Information
- Harness Type: Engine Wiring Harness
- OEM Connector: 1-2296695-1
- Service Connector: 86792094
- Description: 3-Way F 1.2 MCON-CB Series, Sealed(BK)

Terminal Part Information

Terminal Type ID	Terminated Lead	Diagnostic Test Probe	Terminal Removal Tool
I	Not required	J-35616-12 (BU)	No Tool Required

B1 A/C Refrigerant Pressure Sensor

Pin	Size	Color	Circuit	Function	Terminal Type ID	Option
(1) 1	(1) 0.5	(1) BU / RD	(1) 460	(1) Engine Control Sensors 5 Volt Reference 1	(1) I	(1) —
(2) 2	(2) 0.5	(2) GN	(2) 380	(2) Air Conditioning Refrigerant Pressure Sensor Signal	(2) I	(2) —
(3) 3	(3) 0.5	(3) BK / GY	(3) 626	(3) Engine Control Vehicle Sensors Low Reference 1	(3) I	(3) —

B1B A/C Low Side Pressure Switch

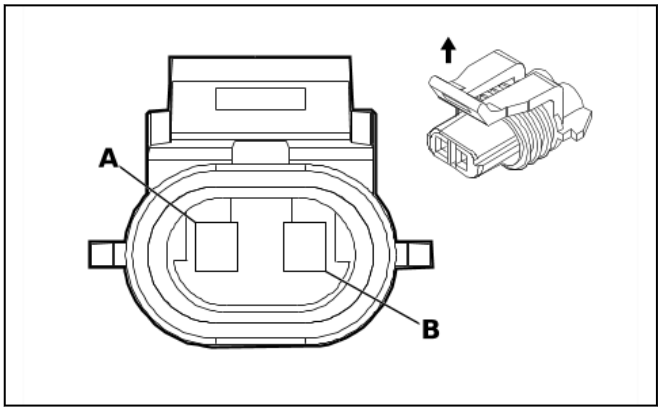

537107

Connector Part Information

- Harness Type: Engine Wiring Harness
- OEM Connector: 12052644
- Service Connector: 19368034
- Description: 2-Way F 150 Metri-Pack Series, Sealed(GY)

Terminal Part Information

Terminal Type ID	Terminated Lead	Diagnostic Test Probe	Terminal Removal Tool
I	Not required	J-35616-14 (GN)	No Tool Required

B1B A/C Low Side Pressure Switch

Pin	Size	Color	Circuit	Function	Terminal Type ID	Option
A	0.5	BN	66	Air Conditioning Request Signal	I	—
B	0.5	BN / WH	66	Air Conditioning Request Signal	I	—

B5LF Wheel Speed Sensor - Left Front

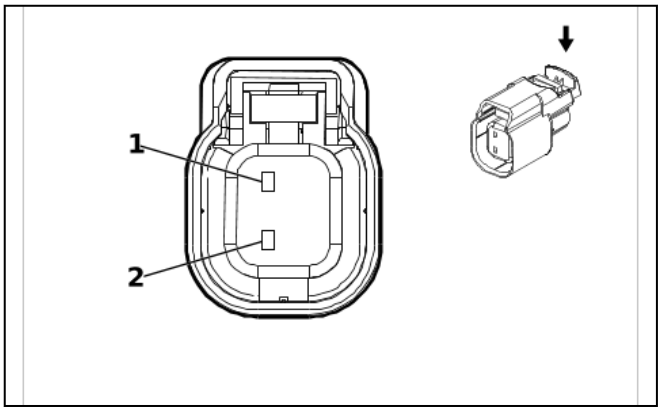

2792100

Connector Part Information
- Harness Type: Chassis Wiring Harness
- OEM Connector: 34062-0027
- Service Connector: 87821959
- Description: 2-Way F 1.5 Series, Sealed(BK)

Terminal Part Information

Terminal Type ID	Terminated Lead	Diagnostic Test Probe	Terminal Removal Tool
I	Not required	J-35616-14 (GN)	No Tool Required

B5LF Wheel Speed Sensor - Left Front

Pin	Size	Color	Circuit	Function	Terminal Type ID	Option
(1) 1	(1) 0.5	(1) GY / WH	(1) 7064	(1) Left Front Wheel Speed Sensor Control	(1) I	(1) —
(2) 2	(2) 0.5	(2) GY	(2) 830	(2) Left Front Wheel Speed Sensor Signal	(2) I	(2) —

B5LR Wheel Speed Sensor - Left Rear (R04)

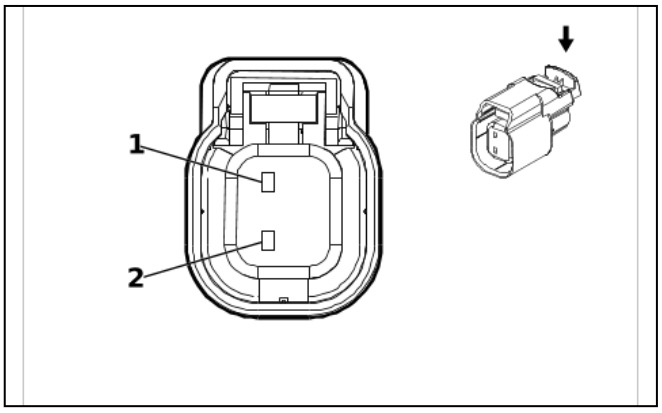

2792100

Connector Part Information
- Harness Type: Chassis Wiring Harness
- OEM Connector: 34062-0027
- Service Connector: 87821959
- Description: 2-Way F 1.5 Series, Sealed(BK)

Terminal Part Information

Terminal Type ID	Terminated Lead	Diagnostic Test Probe	Terminal Removal Tool
I	Not required	J-35616-14 (GN)	No Tool Required

B5LR Wheel Speed Sensor - Left Rear (R04)

Pin	Size	Color	Circuit	Function	Terminal Type ID	Option
(1) 1	(1) 0.5	(1) GY / BK	(1) 7127	(1) Left Rear Wheel Speed Sensor Control	(1) I	(1) —
(2) 2	(2) 0.5	(2) BU	(2) 884	(2) Left Rear Wheel Speed Sensor Signal	(2) I	(2) —

B5LR Wheel Speed Sensor - Left Rear (R05)

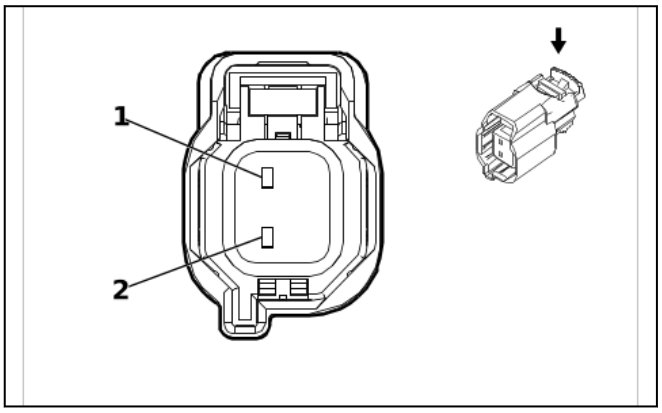

3651383

Connector Part Information

- Harness Type: Chassis Wiring Harness
- OEM Connector: 34062-0045
- Service Connector: 19366863
- Description: 2-Way F 1.5 Series, Sealed(L-GY)

Terminal Part Information

Terminal Type ID	Terminated Lead	Diagnostic Test Probe	Terminal Removal Tool
I	Not required	J-35616-14 (GN)	No Tool Required

B5LR Wheel Speed Sensor - Left Rear (R05)

Pin	Size	Color	Circuit	Function	Terminal Type ID	Option
(1) 1	(1) 0.5	(1) GY / BK	(1) 7127	(1) Left Rear Wheel Speed Sensor Control	(1) I	(1) —
(2) 2	(2) 0.5	(2) BU	(2) 884	(2) Left Rear Wheel Speed Sensor Signal	(2) I	(2) —

B5RF Wheel Speed Sensor - Right Front

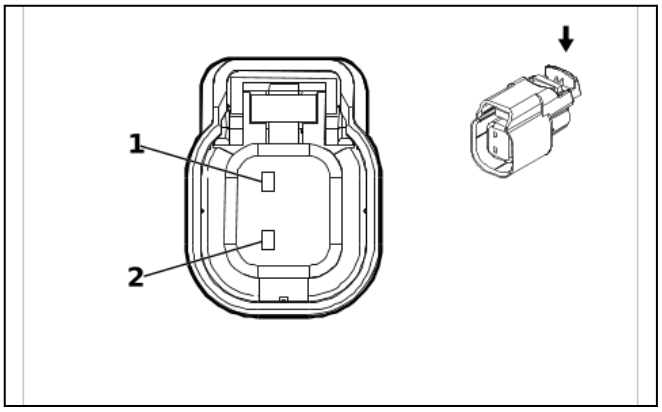

2792100

Connector Part Information
- Harness Type: Chassis Wiring Harness
- OEM Connector: 34062-0027
- Service Connector: 87821959
- Description: 2-Way F 1.5 Series, Sealed(BK)

Terminal Part Information

Terminal Type ID	Terminated Lead	Diagnostic Test Probe	Terminal Removal Tool
I	Not required	J-35616-14 (GN)	No Tool Required

B5RF Wheel Speed Sensor - Right Front

Pin	Size	Color	Circuit	Function	Terminal Type ID	Option
(1) 1	(1) 0.5	(1) GY / BN	(1) 7065	(1) Right Front Wheel Speed Sensor Control	(1) I	(1) —
(2) 2	(2) 0.5	(2) YE	(2) 872	(2) Right Front Wheel Speed Sensor Signal	(2) I	(2) —

B5RR Wheel Speed Sensor - Right Rear (R04)

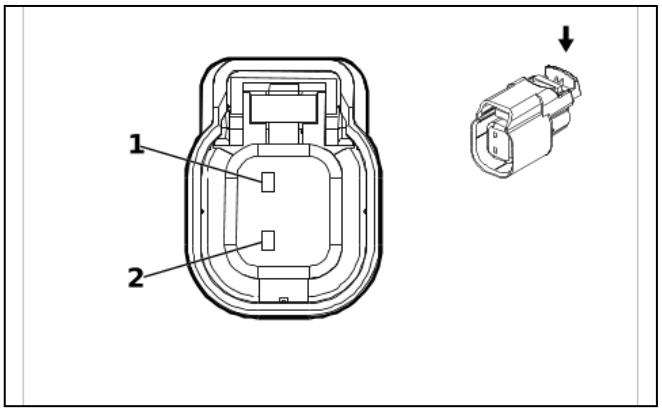

2792100

Connector Part Information
- Harness Type: Chassis Wiring Harness
- OEM Connector: 34062-0027
- Service Connector: 87821959
- Description: 2-Way F 1.5 Series, Sealed(BK)

Terminal Part Information

Terminal Type ID	Terminated Lead	Diagnostic Test Probe	Terminal Removal Tool
I	Not required	J-35616-14 (GN)	No Tool Required

B5RR Wheel Speed Sensor - Right Rear (R04)

Pin	Size	Color	Circuit	Function	Terminal Type ID	Option
(1) 1	(1) 0.5	(1) GY / YE	(1) 7128	(1) Right Rear Wheel Speed Sensor Control	(1) I	(1) —
(2) 2	(2) 0.5	(2) VT	(2) 882	(2) Right Rear Wheel Speed Sensor Signal	(2) I	(2) —

B5RR Wheel Speed Sensor - Right Rear (R05)

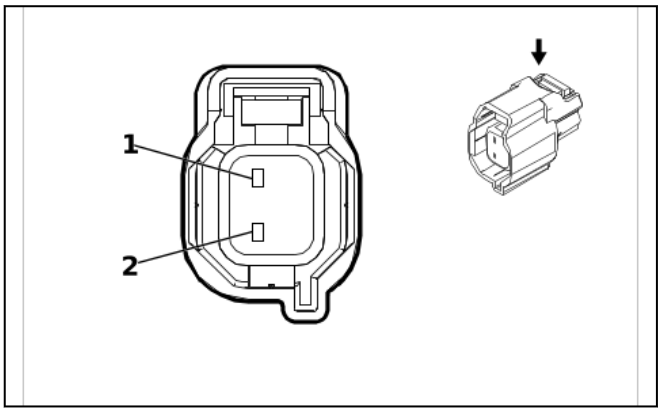

2900396

Connector Part Information

- Harness Type: Chassis Wiring Harness
- OEM Connector: 34062-0026
- Service Connector: 19366856
- Description: 2-Way F 1.5 Series, Sealed(L-GY)

Terminal Part Information

Terminal Type ID	Terminated Lead	Diagnostic Test Probe	Terminal Removal Tool
I	Not required	J-35616-14 (GN)	No Tool Required

B5RR Wheel Speed Sensor - Right Rear (R05)

Pin	Size	Color	Circuit	Function	Terminal Type ID	Option
(1) 1	(1) 0.5	(1) GY / YE	(1) 7128	(1) Right Rear Wheel Speed Sensor Control	(1) I	(1) —
(2) 2	(2) 0.5	(2) VT	(2) 882	(2) Right Rear Wheel Speed Sensor Signal	(2) I	(2) —

B9 Ambient Air Temperature Sensor (UFA)

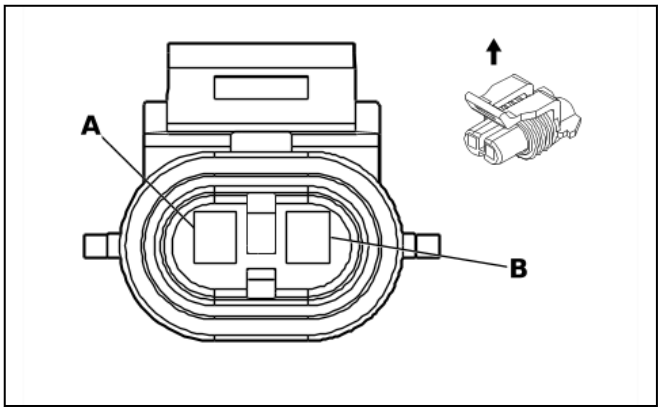

684793

Connector Part Information

- Harness Type: Forward Lamp Wiring Harness
- OEM Connector: 12052642
- Service Connector: 12101856
- Description: 2-Way F 150 Metri-Pack Series, Sealed(L-GN)

Terminal Part Information

Terminal Type ID	Terminated Lead	Diagnostic Test Probe	Terminal Removal Tool
I	Not required	J-35616-14 (GN)	No Tool Required
II	Not required	No Tool Required	No Tool Required

B9 Ambient Air Temperature Sensor (UFA)

Pin	Size	Color	Circuit	Function	Terminal Type ID	Option
(1) 1	(1) —	(1) BU / GY	(1) 636	(1) Ambient Air Temperature Sensor Signal	(1) II	(1) —
(2) 2	(2) —	(2) BK / GN	(2) 580	(2) Engine Control Sensors Low Reference 2	(2) II	(2) —
A	0.5	BU / GY	636	Ambient Air Temperature Sensor Signal	I	—
B	0.5	BK / BU	61	Ambient Air Temperature Sensor Low Reference	I	—

B10 Ambient Light Sensor

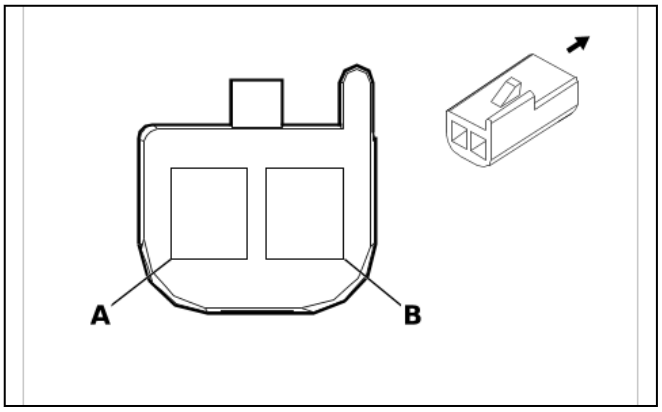

82383

Connector Part Information
- Harness Type: Instrument Panel Wiring Harness
- OEM Connector: 12047662
- Service Connector: 12085535
- Description: 2-Way F 150 Metri-Pack Series(BK)

Terminal Part Information

Terminal Type ID	Terminated Lead	Diagnostic Test Probe	Terminal Removal Tool
I	Not required	J-35616-14 (GN)	No Tool Required

B10 Ambient Light Sensor

Pin	Size	Color	Circuit	Function	Terminal Type ID	Option
A	0.35	WH	278	Ambient Light Sensor Signal	I	—
B	0.35	BK / WH	351	Signal Ground	I	—

B12B Transmission Fluid Pressure Sensor

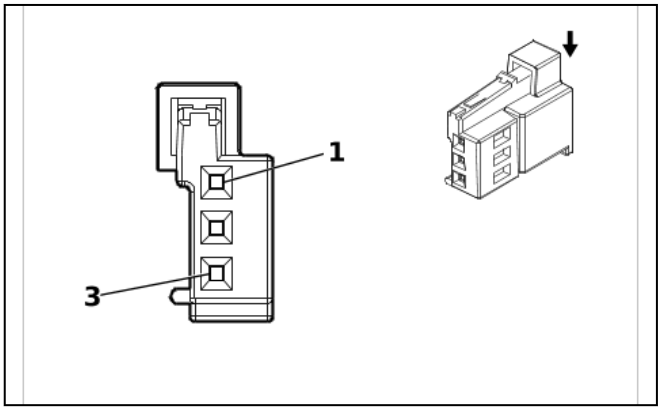

4829276

Connector Part Information
- Harness Type: Automatic Transmission Wiring Harness
- OEM Connector: 2293842-1
- Service Connector: Service by Harness - See Part Catalog
- Description: 3-Way F 0.64 Series(BU)

Terminal Part Information

Terminal Type ID	Terminated Lead	Diagnostic Test Probe	Terminal Removal Tool
I	Not required	J-35616-64B (L-BU)	No Tool Required

B12B Transmission Fluid Pressure Sensor

Pin	Size	Color	Circuit	Function	Terminal Type ID	Option
(1) 1	(1) 0.5	(1) GY / RD	(1) 10817	(1) Lubricant Circuit Pressure Sensor 5 Volt Reference	(1) I	(1) —
(2) 2	(2) 0.5	(2) BU / BK	(2) 10819	(2) Lubricant Circuit Pressure Sensor Low Reference	(2) I	(2) —
(3) 3	(3) 0.5	(3) GN / YE	(3) 10816	(3) Lubricant Circuit Pressure Sensor Signal	(3) I	(3) —

B13 Transmission Fluid Temperature Sensor

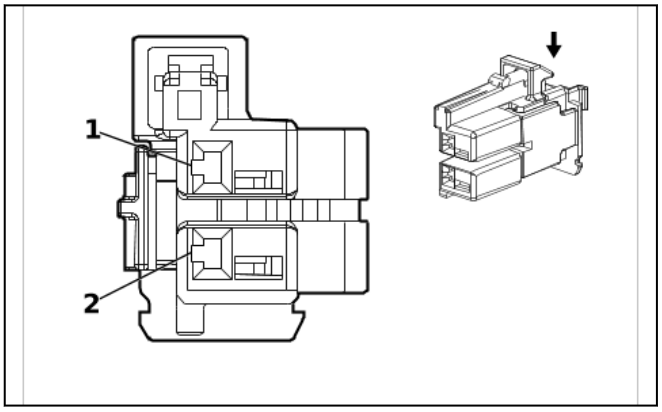

4672650

Connector Part Information

- Harness Type: Automatic Transmission Wiring Harness
- OEM Connector: 312004A
- Service Connector: Service by Harness - See Part Catalog
- Description: 2-Way F 1.2 MCON Series(BN)

Terminal Part Information

Terminal Type ID	Terminated Lead	Diagnostic Test Probe	Terminal Removal Tool
I	Not required	J-35616-12 (BU)	No Tool Required

B13 Transmission Fluid Temperature Sensor

Pin	Size	Color	Circuit	Function	Terminal Type ID	Option
(1) 1	(1) 0.5	(1) BN / WH	(1) 585	(1) Transmission Fluid Temperature Sensor Signal	(1) I	(1) —
(2) 2	(2) 0.5	(2) BK / BN	(2) 586	(2) Transmission Fluid Temperature Sensor Low Reference	(2) I	(2) —

B19A Brake Booster Fluid Pressure Alarm Switch

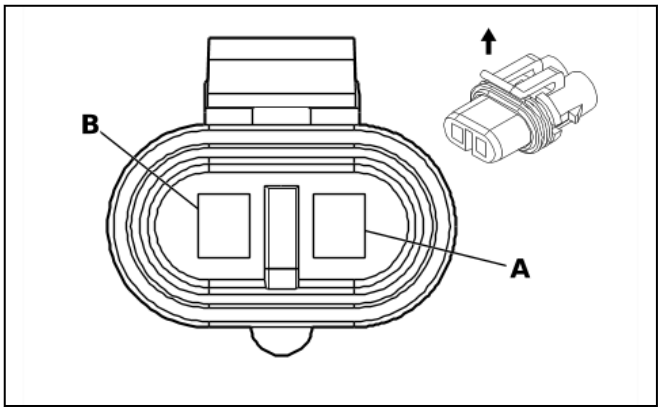

646148

Connector Part Information
- Harness Type: Brake Fluid Level Indicator Wiring Harness
- OEM Connector: 12020599
- Service Connector: Service by Harness - See Part Catalog
- Description: 2-Way F 280 Metri-Pack Series, Sealed(BK)

Terminal Part Information

Terminal Type ID	Terminated Lead	Diagnostic Test Probe	Terminal Removal Tool
I	Not required	J-35616-4A (PU)	No Tool Required

B19A Brake Booster Fluid Pressure Alarm Switch

Pin	Size	Color	Circuit	Function	Terminal Type ID	Option
A	0.5	TN / WH	33	Brake Warning Indicator Control	I	—
B	0.5	BU / BK	1928	Brake Booster Fluid Flow Alarm Switch Signal	I	—

B20 Brake Fluid Level Switch

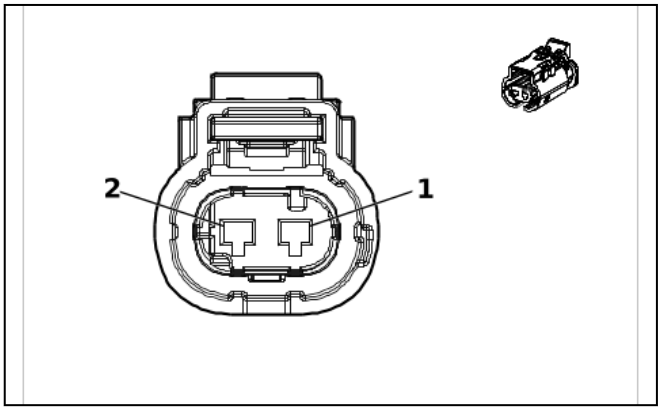

6776339

Connector Part Information
- Harness Type: Engine Wiring Harness
- OEM Connector: 10530497
- Service Connector: 86308598
- Description: 2-Way F 1.2 MLK Series, Sealed(BK)

Terminal Part Information

Terminal Type ID	Terminated Lead	Diagnostic Test Probe	Terminal Removal Tool
I	Not required	J-35616-12 (BU)	No Tool Required

B20 Brake Fluid Level Switch

Pin	Size	Color	Circuit	Function	Terminal Type ID	Option
(1) 1	(1) 0.75	(1) BK / WH	(1) 1551	(1) Signal Ground	(1) I	(1) —
(2) 2	(2) 0.75	(2) GN / GY	(2) 333	(2) Brake Fluid Level Signal	(2) I	(2) —

B22 Brake Pedal Position Sensor

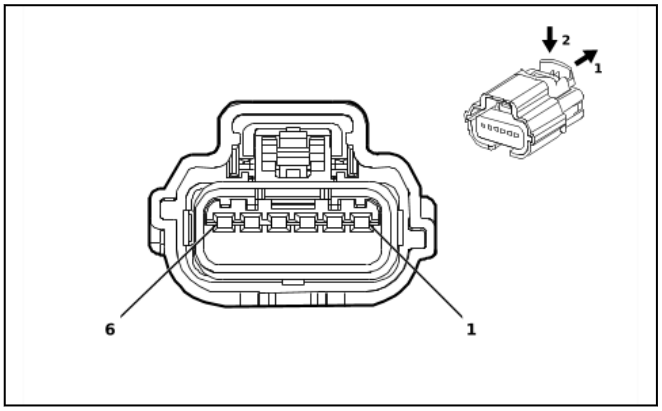

4773396

Connector Part Information

- Harness Type: Instrument Panel Wiring Harness
- OEM Connector: 31404-7810
- Service Connector: 84683650
- Description: 6-Way F 0.64 Series, Sealed(NA)

Terminal Part Information

Terminal Type ID	Terminated Lead	Diagnostic Test Probe	Terminal Removal Tool
I	Not required	J-35616-64B (L-BU)	No Tool Required

B22 Brake Pedal Position Sensor

Pin	Size	Color	Circuit	Function	Terminal Type ID	Option
(1) 1	(1) 0.5	(1) BN / WH	(1) 5382	(1) Brake Position Sensor Low Reference	(1) I	(1) —
(2) 2	(2) 0.5	(2) GY	(2) 5381	(2) Brake Position Sensor 5V Reference	(2) I	(2) —
(3) 3	(3) 0.5	(3) TN	(3) 5380	(3) Brake Position Sensor Signal	(3) I	(3) —
(4) 4	(4) 0.5	(4) YE	(4) 5361	(4) Brake Apply Sensor Signal	(4) I	(4) —
(5) 5	(5) 0.5	(5) BN	(5) 5360	(5) Brake Apply Sensor Low Reference	(5) I	(5) —
(6) 6	(6) 0.5	(6) WH	(6) 5359	(6) Brake Apply Sensor Control	(6) I	(6) —

B23 Camshaft Position Sensor

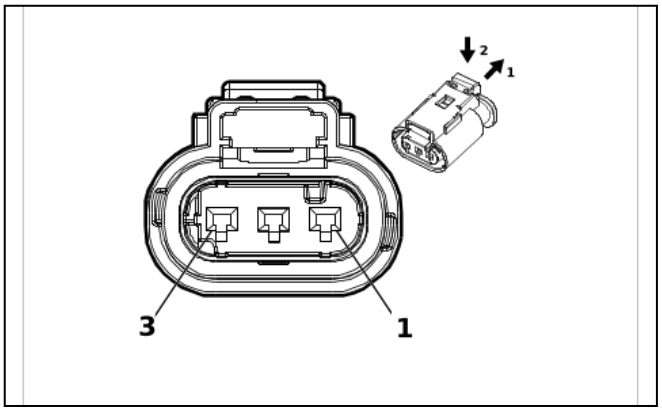

2717069

Connector Part Information

- Harness Type: Camshaft Position Sensor Wire
- OEM Connector: 10010341
- Service Connector: Service by Harness - See Part Catalog
- Description: 3-Way F 1.2 Multilock Series, Sealed(BK)

Terminal Part Information

Terminal Type ID	Terminated Lead	Diagnostic Test Probe	Terminal Removal Tool
I	Not required	J-35616-12 (BU)	No Tool Required

B23 Camshaft Position Sensor

Pin	Size	Color	Circuit	Function	Terminal Type ID	Option
(1) 1	(1) 0.5	(1) GY / BU	(1) 5300	(1) Intake Camshaft Position Sensor 1 Voltage Reference	(1) I	(1) —
(2) 2	(2) 0.5	(2) BK / GN	(2) 5301	(2) Intake Camshaft Position Sensor Low Reference 1	(2) I	(2) —
(3) 3	(3) 0.5	(3) YE / VT	(3) 5275	(3) Intake Camshaft Position Sensor 1	(3) I	(3) —

B24 Mobile Telephone Microphone

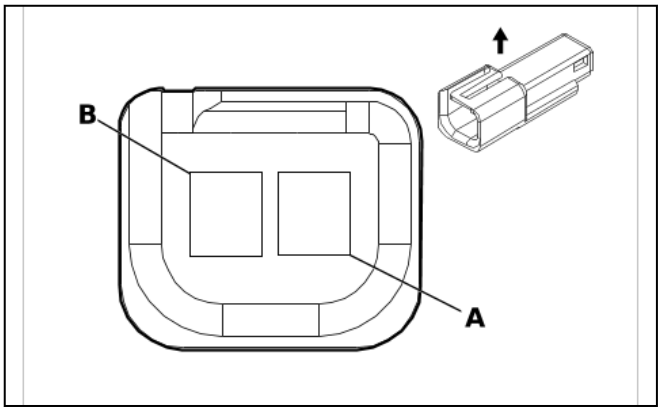

35441

Connector Part Information
- Harness Type: Roof Console Wiring Harness
- OEM Connector: 12047663
- Service Connector: 13584278
- Description: 2-Way M 150 Metri-Pack Series(BK)

Terminal Part Information

Terminal Type ID	Terminated Lead	Diagnostic Test Probe	Terminal Removal Tool
I	Not required	J-35616-3 (GY)	No Tool Required

B24 Mobile Telephone Microphone

Pin	Size	Color	Circuit	Function	Terminal Type ID	Option
A	0.75	GN	654	Cellular Telephone Microphone Low Reference	I	—
B	0.75	GY	655	Cellular Telephone Microphone Signal	I	—

B26 Crankshaft Position Sensor

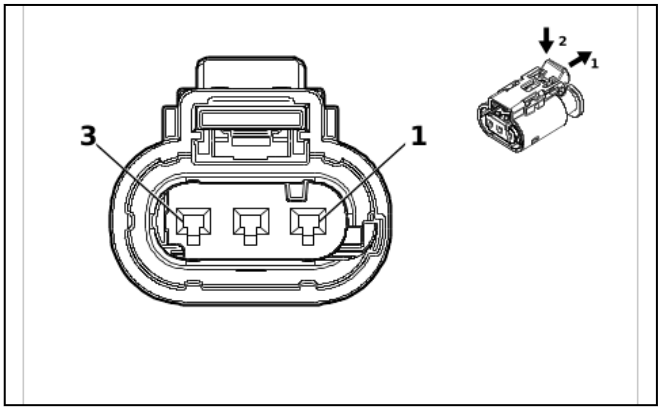

6851172

Connector Part Information
- Harness Type: Engine Wiring Harness
- OEM Connector: 10531901
- Service Connector: 86419006
- Description: 3-Way F 1.2 MLK Series, Sealed(BK)

Terminal Part Information

Terminal Type ID	Terminated Lead	Diagnostic Test Probe	Terminal Removal Tool
I	Not required	J-35616-16 (L-GN)	No Tool Required

B26 Crankshaft Position Sensor

Pin	Size	Color	Circuit	Function	Terminal Type ID	Option
(1) 1	(1) 0.5	(1) GN	(1) 6271	(1) Crankshaft Position Sensor Signal	(1) I	(1) —
(2) 2	(2) 0.5	(2) BK / VT	(2) 6272	(2) Crankshaft Position Sensor Low Reference	(2) I	(2) —
(3) 3	(3) 0.5	(3) VT / BU	(3) 6270	(3) Crankshaft Position Sensor Voltage	(3) I	(3) —

B28RR Door Ajar Switch - Right Rear

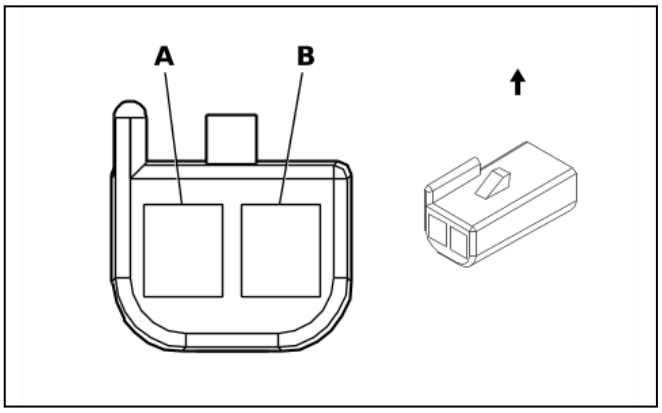

35451

Connector Part Information

- Harness Type: Body Wiring Harness
- OEM Connector: 12059251
- Service Connector: 12101848
- Description: 2-Way F 150 Metri-Pack Series(RD)

Terminal Part Information

Terminal Type ID	Terminated Lead	Diagnostic Test Probe	Terminal Removal Tool
I	Not required	J-35616-14 (GN)	No Tool Required

B28RR Door Ajar Switch - Right Rear

Pin	Size	Color	Circuit	Function	Terminal Type ID	Option
A	0.35	BK	1850	Ground	I	—
B	0.35	YE / BK	1181	Right Rear Door Open Switch Signal	I	—

B34 Engine Coolant Temperature Sensor (L8T)

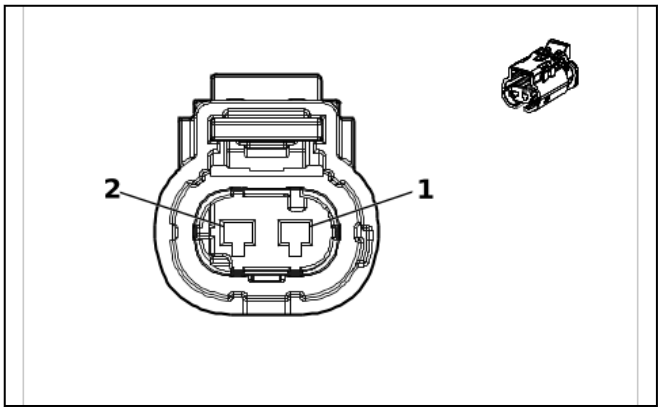

6776339

Connector Part Information
- Harness Type: Engine Coolant Temperature Sensor Harness
- OEM Connector: 13562387
- Service Connector: Service by Harness - See Part Catalog
- Description: 2-Way F 1.2 MLK Series, Sealed(BK)

Terminal Part Information

Terminal Type ID	Terminated Lead	Diagnostic Test Probe	Terminal Removal Tool
I	Not required	J-35616-12 (BU)	No Tool Required

B34 Engine Coolant Temperature Sensor (L8T)

Pin	Size	Color	Circuit	Function	Terminal Type ID	Option
(1) 1	(1) 0.5	(1) BU	(1) 410	(1) Engine Coolant Temperature Sensor Signal	(1) I	(1) —
(2) 2	(2) 0.5	(2) BK / YE	(2) 548	(2) Engine Control Sensors Low Reference 1	(2) I	(2) —

B34 Engine Coolant Temperature Sensor (LV1)

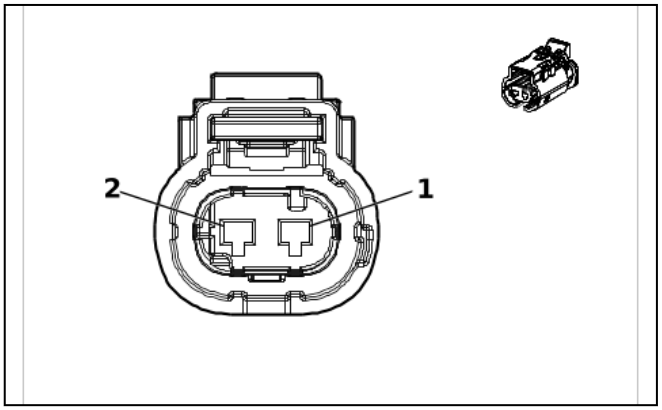

6776339

Connector Part Information
- Harness Type: Engine Wiring Harness
- OEM Connector: 10530497
- Service Connector: 86308598
- Description: 2-Way F 1.2 MLK Series, Sealed(BK)

Terminal Part Information

Terminal Type ID	Terminated Lead	Diagnostic Test Probe	Terminal Removal Tool
I	Not required	J-35616-16 (L-GN)	No Tool Required

B34 Engine Coolant Temperature Sensor (LV1)

Pin	Size	Color	Circuit	Function	Terminal Type ID	Option
(1) 1	(1) 0.5	(1) BU	(1) 410	(1) Engine Coolant Temperature Sensor Signal	(1) I	(1) —
(2) 2	(2) 0.5	(2) BK / YE	(2) 548	(2) Engine Control Sensors Low Reference 1	(2) I	(2) —

B35 Engine Oil Level Switch (L8T)

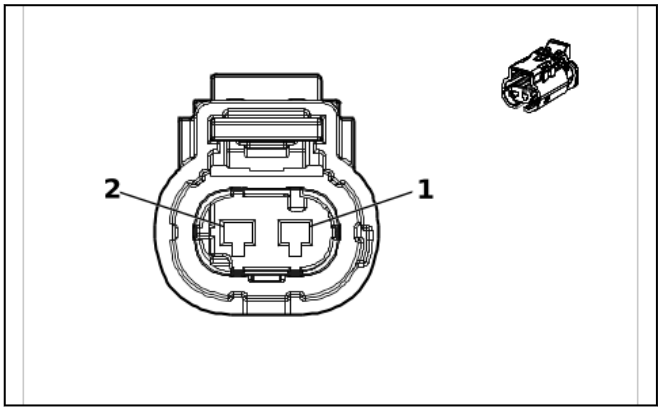

6776339

Connector Part Information

- Harness Type: Engine Wiring Harness
- OEM Connector: 10530497
- Service Connector: 86308598
- Description: 2-Way F 1.2 MLK Series, Sealed(BK)

Terminal Part Information

Terminal Type ID	Terminated Lead	Diagnostic Test Probe	Terminal Removal Tool
I	Not required	J-35616-16 (L-GN)	No Tool Required

B35 Engine Oil Level Switch (L8T)

Pin	Size	Color	Circuit	Function	Terminal Type ID	Option
(1) 1	(1) 0.5	(1) BN / GN	(1) 1174	(1) Oil Level Switch Signal	(1) I	(1) —
(2) 2	(2) 0.75	(2) BK / WH	(2) 1551	(2) Signal Ground	(2) I	(2) —

B35 Engine Oil Level Switch (LV1)

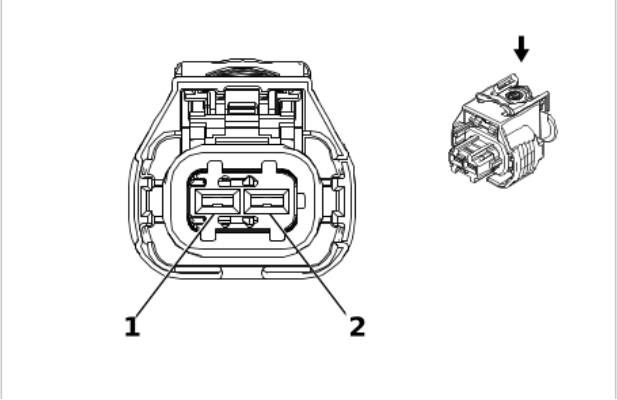

2577394

Connector Part Information
- Harness Type: Engine Wiring Harness
- OEM Connector: 1 928 405 714
- Service Connector: 13384371
- Description: 2-Way F 2.8 Series, Sealed(BK)

Terminal Part Information

Terminal Type ID	Terminated Lead	Diagnostic Test Probe	Terminal Removal Tool
I	Not required	J-35616-35 (VT)	No Tool Required

B35 Engine Oil Level Switch (LV1)

Pin	Size	Color	Circuit	Function	Terminal Type ID	Option
(1) 1	(1) 0.5	(1) BN / GN	(1) 1174	(1) Oil Level Switch Signal	(1) I	(1) —
(2) 2	(2) 0.75	(2) BK / WH	(2) 1551	(2) Signal Ground	(2) I	(2) —

B36 Engine Oil Temperature Sensor

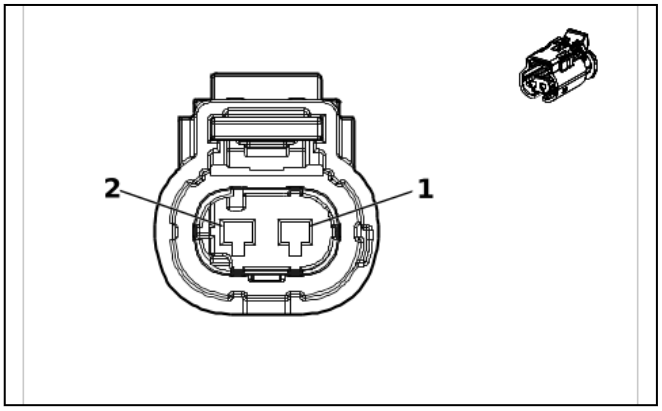

6860491

Connector Part Information
- Harness Type: Engine Wiring Harness
- OEM Connector: 10530499
- Service Connector: 86308599
- Description: 2-Way F 1.2 MLK Series, Sealed(GY)

Terminal Part Information

Terminal Type ID	Terminated Lead	Diagnostic Test Probe	Terminal Removal Tool
I	Not required	J-35616-16 (L-GN)	No Tool Required

B36 Engine Oil Temperature Sensor

Pin	Size	Color	Circuit	Function	Terminal Type ID	Option
(1) 1	(1) 0.5	(1) BN / BU	(1) 357	(1) Oil Temperature Sensor Signal	(1) I	(1) —
(2) 2	(2) 0.5	(2) BK / YE	(2) 548	(2) Engine Control Sensors Low Reference 1	(2) I	(2) —

B37B Engine Oil Pressure Sensor (L8T)

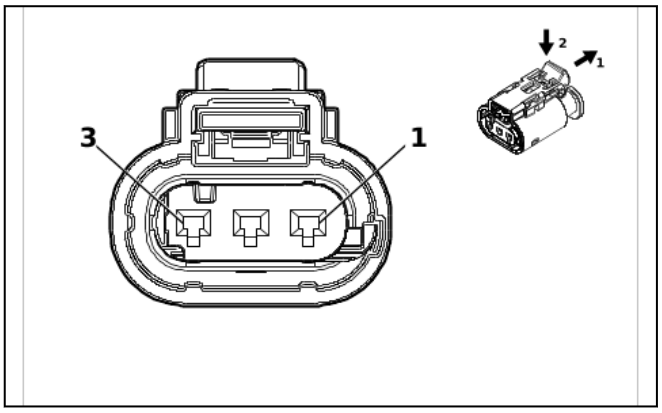

6932387

Connector Part Information

- Harness Type: Engine Coolant Temperature Sensor Harness
- OEM Connector: 13551875
- Service Connector: Service by Harness - See Part Catalog
- Description: 3-Way F 1.2 MLK Series, Sealed(BK)

Terminal Part Information

Terminal Type ID	Terminated Lead	Diagnostic Test Probe	Terminal Removal Tool
I	Not required	J-35616-12 (BU)	No Tool Required

B37B Engine Oil Pressure Sensor (L8T)

Pin	Size	Color	Circuit	Function	Terminal Type ID	Option
(1) 1	(1) 0.5	(1) YE / BN	(1) 331	(1) Oil Pressure Sensor Signal	(1) I	(1) —
(2) 2	(2) 0.5	(2) BK / YE	(2) 548	(2) Engine Control Sensors Low Reference 1	(2) I	(2) —
(3) 3	(3) 0.5	(3) WH / RD	(3) 480	(3) Engine Control Vehicle Sensors 5 Volt Reference 1	(3) I	(3) —

B37B Engine Oil Pressure Sensor (LV1)

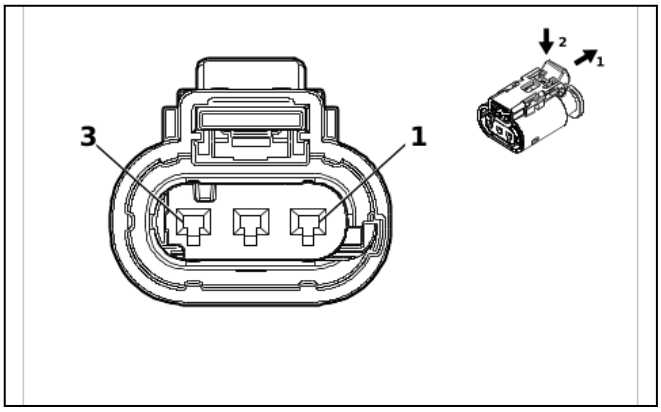

6932387

Connector Part Information

- Harness Type: Engine Wiring Harness
- OEM Connector: 10531904
- Service Connector: 86419008
- Description: 3-Way F 1.2 MLK Series, Sealed(BK)

Terminal Part Information

Terminal Type ID	Terminated Lead	Diagnostic Test Probe	Terminal Removal Tool
I	Not required	J-35616-16 (L-GN)	No Tool Required

B37B Engine Oil Pressure Sensor (LV1)

Pin	Size	Color	Circuit	Function	Terminal Type ID	Option
(1) 1	(1) 0.5	(1) YE / BN	(1) 331	(1) Oil Pressure Sensor Signal	(1) I	(1) —
(2) 2	(2) 0.5	(2) BK / YE	(2) 548	(2) Engine Control Sensors Low Reference 1	(2) I	(2) —
(3) 3	(3) 0.5	(3) WH / RD	(3) 480	(3) Engine Control Vehicle Sensors 5 Volt Reference 1	(3) I	(3) —

B47 Fuel Pressure Sensor - Cutaway

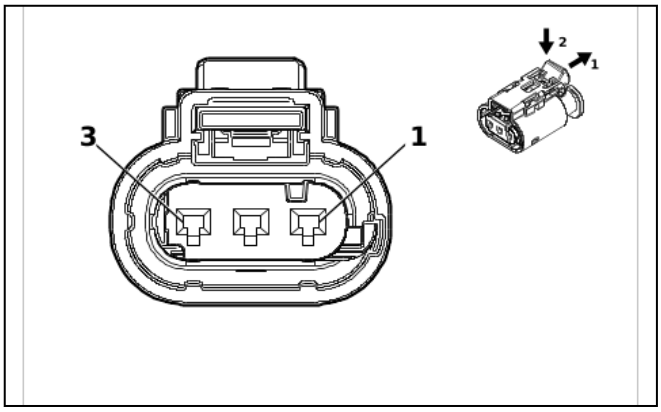

6851172

Connector Part Information

- Harness Type: Chassis Wiring Harness
- OEM Connector: 10531901
- Service Connector: 86419006
- Description: 3-Way F 1.2 MLK Series, Sealed(BK)

Terminal Part Information

Terminal Type ID	Terminated Lead	Diagnostic Test Probe	Terminal Removal Tool
I	Not required	J-35616-16 (L-GN)	No Tool Required

B47 Fuel Pressure Sensor - Cutaway

Pin	Size	Color	Circuit	Function	Terminal Type ID	Option
(1) 1	(1) 0.5	(1) BN / RD	(1) 7445	(1) Fuel Line Pressure Sensor 5V Reference	(1) I	(1) —
(2) 2	(2) 0.5	(2) BK / YE	(2) 7447	(2) Fuel Pressure Sensor Low Reference	(2) I	(2) —
(3) 3	(3) 0.5	(3) BU / WH	(3) 7446	(3) Fuel Pressure Sensor Signal	(3) I	(3) —

B47 Fuel Pressure Sensor - (- Cutaway)

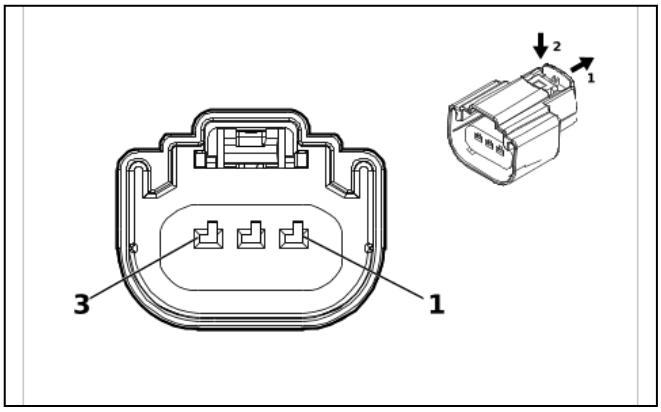

4569745

Connector Part Information

- Harness Type: Chassis Wiring Harness
- OEM Connector: 160073-3105
- Service Connector: 19179750
- Description: 3-Way F 1.5 MX Series, Sealed(BK)

Terminal Part Information

Terminal Type ID	Terminated Lead	Diagnostic Test Probe	Terminal Removal Tool
I	Not required	J-35616-2A (GY)	No Tool Required

B47 Fuel Pressure Sensor - (- Cutaway)

Pin	Size	Color	Circuit	Function	Terminal Type ID	Option
(1) 1	(1) 0.5	(1) BU / WH	(1) 7446	(1) Fuel Pressure Sensor Signal	(1) I	(1) —
(2) 2	(2) 0.5	(2) BK / YE	(2) 7447	(2) Fuel Pressure Sensor Low Reference	(2) I	(2) —
(3) 3	(3) 0.5	(3) BN / RD	(3) 7445	(3) Fuel Line Pressure Sensor 5V Reference	(3) I	(3) —

B47B Fuel Rail Pressure Sensor

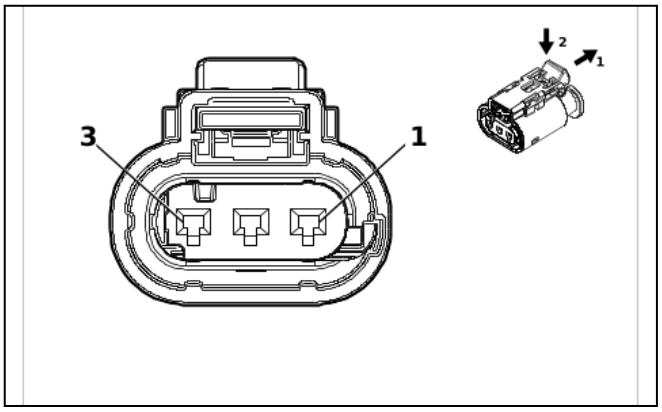

6932387

Connector Part Information

- Harness Type: Fuel Injector Wiring Harness - Left
- OEM Connector: 10531904
- Service Connector: Service by Harness - See Part Catalog
- Description: 3-Way F 1.2 MLK Series, Sealed(BK)

Terminal Part Information

Terminal Type ID	Terminated Lead	Diagnostic Test Probe	Terminal Removal Tool
I	Not required	J-35616-16 (L-GN)	No Tool Required

B47B Fuel Rail Pressure Sensor

Pin	Size	Color	Circuit	Function	Terminal Type ID	Option
(1) 1	(1) 0.5	(1) BK / YE	(1) 548	(1) Engine Control Sensors Low Reference 1	(1) I	(1) —
(2) 2	(2) 0.5	(2) BU / WH	(2) 2918	(2) Fuel Rail Pressure Sensor Signal	(2) I	(2) —
(3) 3	(3) 0.5	(3) WH / RD	(3) 480	(3) Engine Control Vehicle Sensors 5 Volt Reference 1	(3) I	(3) —

B52C Heated Oxygen Sensor - Bank 1 Sensor 1

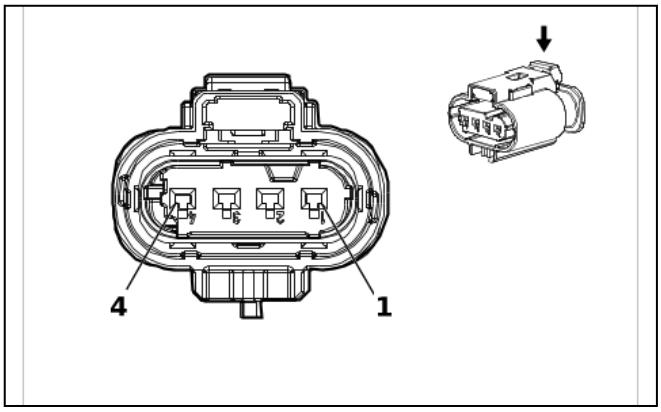

4381050

Connector Part Information

- Harness Type: Engine Wiring Harness
- OEM Connector: 13562508
- Service Connector: 85877333
- Description: 4-Way F 1.2 Multilock Series, Sealed(GY)

Terminal Part Information

Terminal Type ID	Terminated Lead	Diagnostic Test Probe	Terminal Removal Tool
I	Not required	J-35616-16 (L-GN)	No Tool Required

B52C Heated Oxygen Sensor - Bank 1 Sensor 1

Pin	Size	Color	Circuit	Function	Terminal Type ID	Option
(1) 1	(1) 0.5	(1) GY / WH	(1) 3113	(1) HO2S Heater Low Control Bank 1 Sensor 1	(1) I	(1) —
(2) 2	(2) 0.5	(2) VT / BU	(2) 5293	(2) Powertrain Main Relay Fused Supply Voltage 4	(2) I	(2) —
(3) 3	(3) 0.5	(3) WH / BK	(3) 3111	(3) HO2S Low Signal Bank 1 Sensor 1	(3) I	(3) —
(4) 4	(4) 0.5	(4) VT / GY	(4) 3110	(4) HO2S High Signal Bank 1 Sensor 1	(4) I	(4) —

B52D Heated Oxygen Sensor - Bank 1 Sensor 2

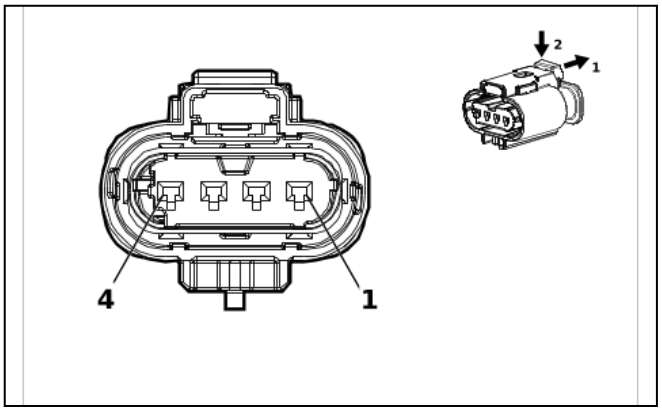

6946679

Connector Part Information

- Harness Type: Engine Wiring Harness
- OEM Connector: 10531910
- Service Connector: 86419010
- Description: 4-Way F 1.2 Multilock Series, Sealed(BK)

Terminal Part Information

Terminal Type ID	Terminated Lead	Diagnostic Test Probe	Terminal Removal Tool
I	Not required	J-35616-16 (L-GN)	No Tool Required

B52D Heated Oxygen Sensor - Bank 1 Sensor 2

Pin	Size	Color	Circuit	Function	Terminal Type ID	Option
(1) 1	(1) 0.5	(1) GY / WH	(1) 3122	(1) HO2S Heater Low Control Bank 1 Sensor 2	(1) I	(1) —
(2) 2	(2) 0.5	(2) VT / BU	(2) 5294	(2) Powertrain Main Relay Fused Supply Voltage 5	(2) I	(2) —
(3) 3	(3) 0.5	(3) WH / YE	(3) 3121	(3) HO2S Low Signal Bank 1 Sensor 2	(3) I	(3) —
(4) 4	(4) 0.5	(4) VT / BU	(4) 3120	(4) HO2S High Signal Bank 1 Sensor 2	(4) I	(4) —

B52E Heated Oxygen Sensor - Bank 2 Sensor 1

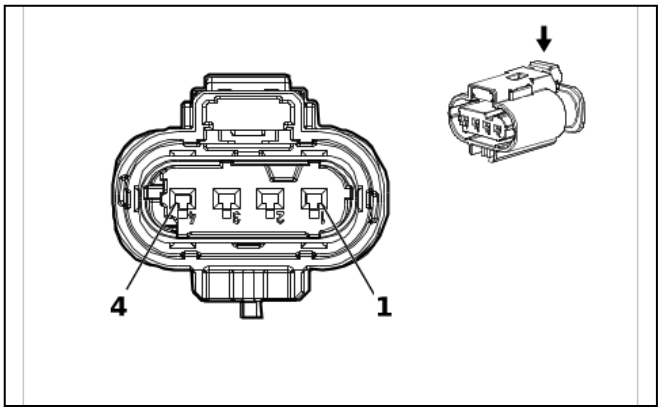

4381050

Connector Part Information

- Harness Type: Engine Wiring Harness
- OEM Connector: 13562508
- Service Connector: 85877333
- Description: 4-Way F 1.2 Multilock Series, Sealed(GY)

Terminal Part Information

Terminal Type ID	Terminated Lead	Diagnostic Test Probe	Terminal Removal Tool
I	Not required	J-35616-16 (L-GN)	No Tool Required

B52E Heated Oxygen Sensor - Bank 2 Sensor 1

Pin	Size	Color	Circuit	Function	Terminal Type ID	Option
(1) 1	(1) 0.5	(1) GN / YE	(1) 3212	(1) HO2S Heater Low Control Bank 2 Sensor 1	(1) I	(1) —
(2) 2	(2) 0.5	(2) VT / BU	(2) 5293	(2) Powertrain Main Relay Fused Supply Voltage 4	(2) I	(2) —
(3) 3	(3) 0.5	(3) YE / WH	(3) 3211	(3) HO2S Low Signal Bank 2 Sensor 1	(3) I	(3) —
(4) 4	(4) 0.5	(4) VT / WH	(4) 3210	(4) HO2S High Signal Bank 2 Sensor 1	(4) I	(4) —

B52F Heated Oxygen Sensor - Bank 2 Sensor 2

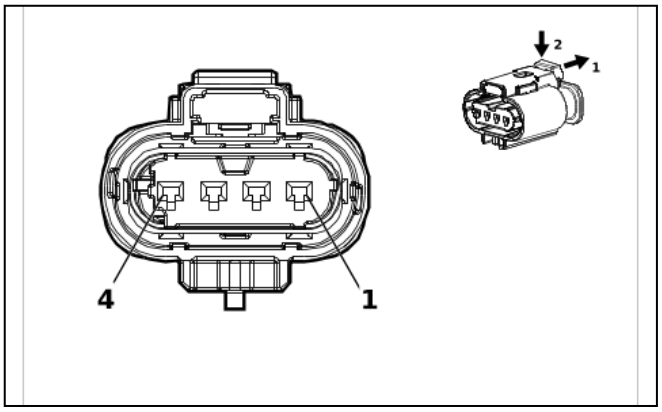

6946679

Connector Part Information

- Harness Type: Engine Wiring Harness
- OEM Connector: 10531910
- Service Connector: 86419010
- Description: 4-Way F 1.2 Multilock Series, Sealed(BK)

Terminal Part Information

Terminal Type ID	Terminated Lead	Diagnostic Test Probe	Terminal Removal Tool
I	Not required	J-35616-16 (L-GN)	No Tool Required

B52F Heated Oxygen Sensor - Bank 2 Sensor 2

Pin	Size	Color	Circuit	Function	Terminal Type ID	Option
(1) 1	(1) 0.5	(1) WH / BN	(1) 3223	(1) HO2S Heater Low Control Bank 2 Sensor 2	(1) I	(1) —
(2) 2	(2) 0.5	(2) VT / BU	(2) 5294	(2) Powertrain Main Relay Fused Supply Voltage 5	(2) I	(2) —
(3) 3	(3) 0.5	(3) YE / BU	(3) 3221	(3) HO2S Low Signal Bank 2 Sensor 2	(3) I	(3) —
(4) 4	(4) 0.5	(4) VT / GN	(4) 3220	(4) HO2S High Signal Bank 2 Sensor 2	(4) I	(4) —

B55 Engine Hood Switch

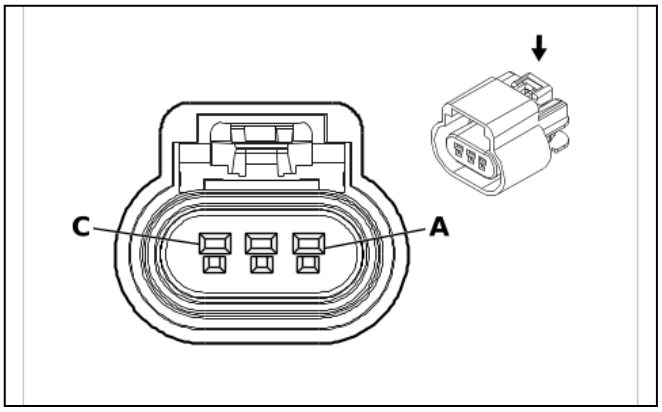

646415

Connector Part Information
- Harness Type: Forward Lamp Wiring Harness
- OEM Connector: 13519047
- Service Connector: 19368886
- Description: 3-Way F 150 GT Series, Sealed(BK)

Terminal Part Information

Terminal Type ID	Terminated Lead	Diagnostic Test Probe	Terminal Removal Tool
I	Not required	J-35616-2A (GY)	No Tool Required

B55 Engine Hood Switch

Pin	Size	Color	Circuit	Function	Terminal Type ID	Option
A	0.5	BN / GN	109	Hood Ajar Switch Signal	I	—
B	0.5	BK / BN	5531	Hood Closed Switch Signal	I	—
C	0.5	BK	250	Ground	I	—

B59 Front Impact Sensor

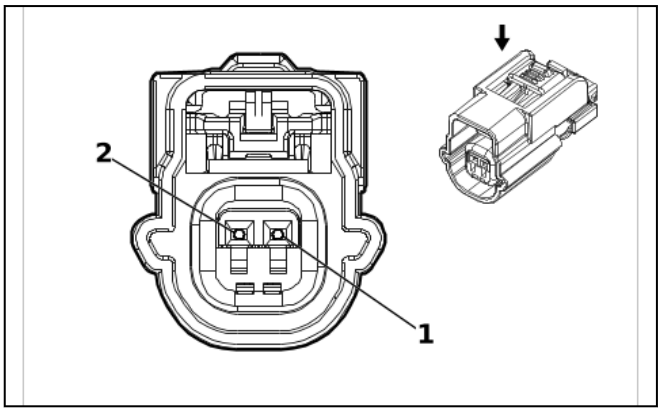

3556418

Connector Part Information
- Harness Type: Front Seat Wiring Harness
- OEM Connector: 13593078
- Service Connector: Service by Harness - See Part Catalog
- Description: 2-Way F 0.64 Series, Sealed(GY)

Terminal Part Information

Terminal Type ID	Terminated Lead	Diagnostic Test Probe	Terminal Removal Tool
I	Not required	J-35616-64B (L-BU)	No Tool Required

B59 Front Impact Sensor

Pin	Size	Color	Circuit	Function	Terminal Type ID	Option
(1) 1	(1) 0.5	(1) BN / WH	(1) 6618	(1) Front Middle Impact Discriminating Sensor Signal	(1) I	(1) —
(2) 2	(2) 0.5	(2) BU / WH	(2) 6619	(2) Front Middle Impact Discriminating Sensor Low Reference	(2) I	(2) —

B63LF Side Impact Sensor - Left Front

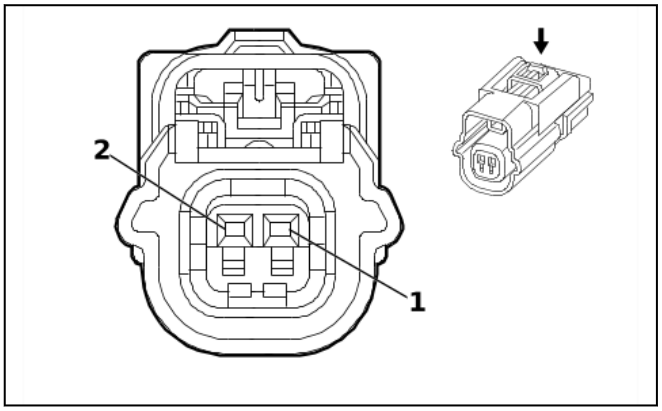

1664592

Connector Part Information

- Harness Type: Airbag Wiring Harness
- OEM Connector: 13528494
- Service Connector: Service by Harness - See Part Catalog
- Description: 2-Way F 0.64 Kaizen Series, Sealed(BK)

Terminal Part Information

Terminal Type ID	Terminated Lead	Diagnostic Test Probe	Terminal Removal Tool
I	Not required	J-35616-64B (L-BU)	No Tool Required

B63LF Side Impact Sensor - Left Front

Pin	Size	Color	Circuit	Function	Terminal Type ID	Option
(1) 1	(1) 0.5	(1) WH	(1) 2132	(1) Left Front Side Impact Sensor Signal	(1) I	(1) —
(2) 2	(2) 0.5	(2) PU / WH	(2) 6628	(2) Left Front Side Impact Sensor Low Reference	(2) I	(2) —

B63LR Side Impact Sensor - Left Rear

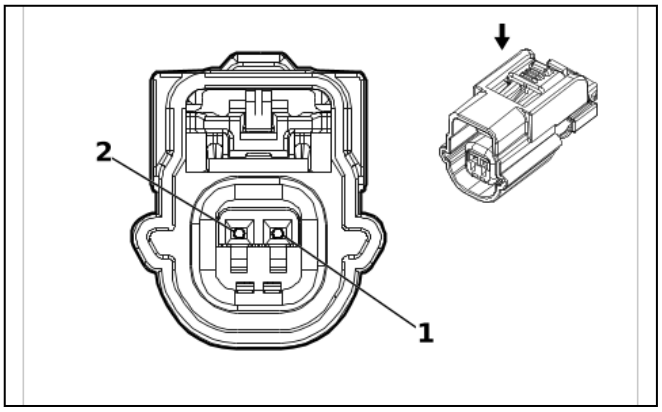

3556418

Connector Part Information
- Harness Type: Airbag Wiring Harness
- OEM Connector: 13593078
- Service Connector: Service by Harness - See Part Catalog
- Description: 2-Way F 0.64 Series, Sealed(GY)

Terminal Part Information

Terminal Type ID	Terminated Lead	Diagnostic Test Probe	Terminal Removal Tool
I	Not required	J-35616-64B (L-BU)	No Tool Required

B63LR Side Impact Sensor - Left Rear

Pin	Size	Color	Circuit	Function	Terminal Type ID	Option
(1) 1	(1) 0.5	(1) GN / WH	(1) 6620	(1) Left Middle Side Impact Sensor Signal	(1) I	(1) —
(2) 2	(2) 0.5	(2) GY / BK	(2) 6621	(2) Left Middle Side Impact Sensor Low Reference	(2) I	(2) —

B63RF Side Impact Sensor - Right Front

—

Connector Part Information
- Harness Type: Rear Window Defogger Wiring Harness
- OEM Connector: Not Available
- Service Connector: Service by Harness - See Part Catalog
- Description: 2-Way

Terminal Part Information

Terminal Type ID	Terminated Lead	Diagnostic Test Probe	Terminal Removal Tool
I	Not required	No Tool Required	No Tool Required

B63RF Side Impact Sensor - Right Front

Pin	Size	Color	Circuit	Function	Terminal Type ID	Option
(1) 1	(1) —	(1) GN	(1) 2134	(1) Right Front Side Impact Sensor Signal	(1) I	(1) —
(2) 2	(2) —	(2) WH / BK	(2) 6629	(2) Right Front Side Impact Sensor Low Reference	(2) I	(2) —

B63RR Side Impact Sensor - Right Rear

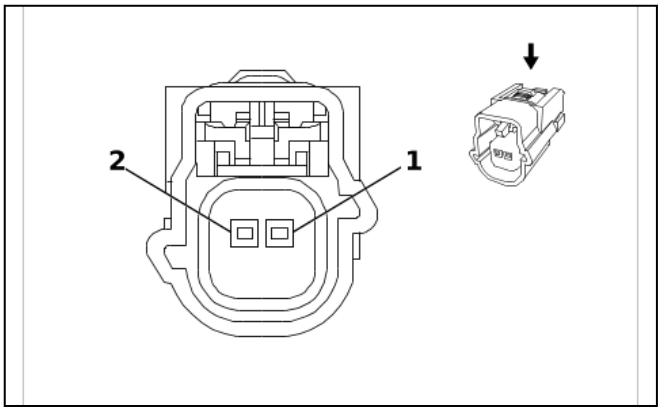

2179777

Connector Part Information
- Harness Type: Airbag Wiring Harness
- OEM Connector: 13610095
- Service Connector: Service by Harness - See Part Catalog
- Description: 2-Way F 0.64 Series, Sealed(GY)

Terminal Part Information

Terminal Type ID	Terminated Lead	Diagnostic Test Probe	Terminal Removal Tool
I	Not required	J-35616-64B (L-BU)	No Tool Required

B63RR Side Impact Sensor - Right Rear

Pin	Size	Color	Circuit	Function	Terminal Type ID	Option
(1) 1	(1) 0.5	(1) BU / BK	(1) 6624	(1) Right Middle Side Impact Sensor Signal	(1) I	(1) —
(2) 2	(2) 0.5	(2) GN / WH	(2) 6625	(2) Right Middle Side Impact Sensor Low Reference	(2) I	(2) —

B68A Knock Sensor 1

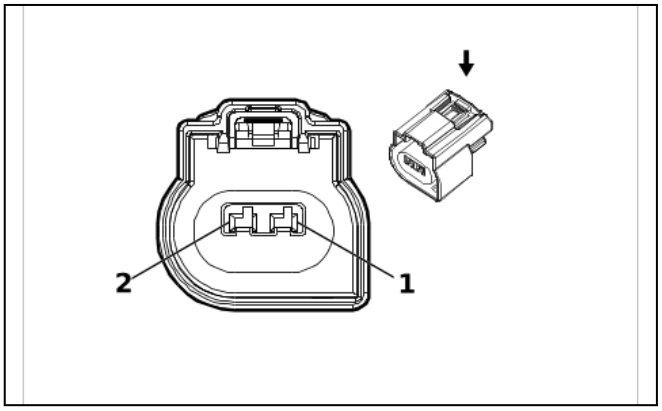

2717073

Connector Part Information
- Harness Type: Engine Wiring Harness
- OEM Connector: 34752-0204
- Service Connector: 19301207
- Description: 2-Way F 1.5 MX Series, Sealed(BK)

Terminal Part Information

Terminal Type ID	Terminated Lead	Diagnostic Test Probe	Terminal Removal Tool
I	Not required	J-35616-14 (GN)	No Tool Required

B68A Knock Sensor 1

Pin	Size	Color	Circuit	Function	Terminal Type ID	Option
(1) 1	(1) 0.75	(1) VT / GY	(1) 496	(1) Knock Sensor 1 Signal	(1) I	(1) —
(2) 2	(2) 0.75	(2) BK / YE	(2) 1716	(2) Knock Sensor Low Reference 1	(2) I	(2) —

B68B Knock Sensor 2

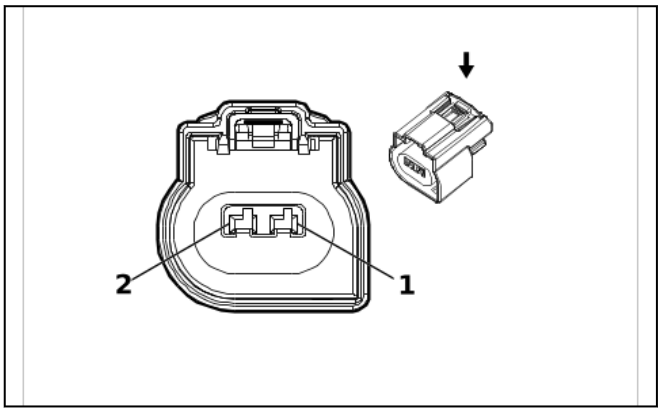

2717073

Connector Part Information

- Harness Type: Engine Wiring Harness
- OEM Connector: 34752-0204
- Service Connector: 19301207
- Description: 2-Way F 1.5 MX Series, Sealed(BK)

Terminal Part Information

Terminal Type ID	Terminated Lead	Diagnostic Test Probe	Terminal Removal Tool
I	Not required	J-35616-14 (GN)	No Tool Required

B68B Knock Sensor 2

Pin	Size	Color	Circuit	Function	Terminal Type ID	Option
(1) 1	(1) 0.75	(1) WH / GY	(1) 1876	(1) Knock Sensor 2 Signal	(1) I	(1) —
(2) 2	(2) 0.75	(2) BK / GY	(2) 2303	(2) Knock Sensor Low Reference 2	(2) I	(2) —

B74 Manifold Absolute Pressure Sensor

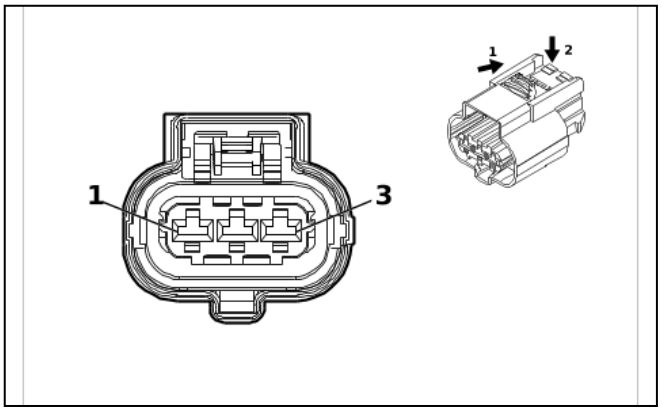

4900977

Connector Part Information

- Harness Type: Engine Wiring Harness
- OEM Connector: 35133579
- Service Connector: 84815530
- Description: 3-Way F 2.8 CTS Series, Sealed(BK)

Terminal Part Information

Terminal Type ID	Terminated Lead	Diagnostic Test Probe	Terminal Removal Tool
I	Not required	J-35616-35 (VT)	No Tool Required

B74 Manifold Absolute Pressure Sensor

Pin	Size	Color	Circuit	Function	Terminal Type ID	Option
(1) 1	(1) 0.5	(1) GY / RD	(1) 2704	(1) Manifold Absolute Pressure Sensor 5V Reference	(1) I	(1) —
(2) 2	(2) 0.5	(2) BK / GN	(2) 469	(2) Manifold Absolute Pressure Sensor Low Reference	(2) I	(2) —
(3) 3	(3) 0.5	(3) GN / WH	(3) 432	(3) Manifold Absolute Pressure Sensor Signal	(3) I	(3) —

B75C Multifunction Intake Air Sensor

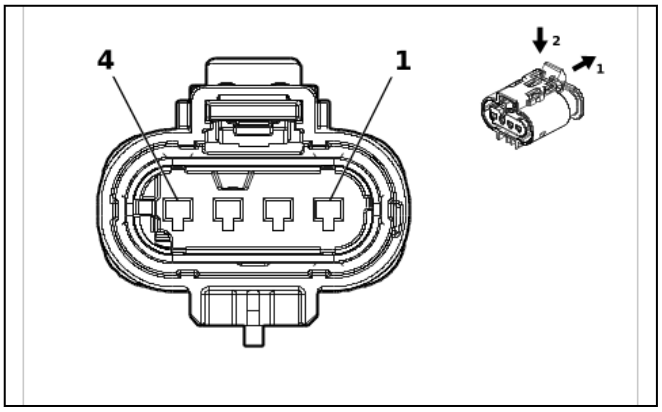

7025645

Connector Part Information
- Harness Type: Engine Wiring Harness
- OEM Connector: 10531906
- Service Connector: 86447447
- Description: 4-Way F 1.2 Multilock Series, Sealed(GY)

Terminal Part Information

Terminal Type ID	Terminated Lead	Diagnostic Test Probe	Terminal Removal Tool
I	Not required	J-35616-16 (L-GN)	No Tool Required

B75C Multifunction Intake Air Sensor

Pin	Size	Color	Circuit	Function	Terminal Type ID	Option
(1) 1	(1) 0.75	(1) VT / BU	(1) 5294	(1) Powertrain Main Relay Fused Supply Voltage 5	(1) I	(1) —
(2) 2	(2) 0.5	(2) GN / WH	(2) 492	(2) Mass Air Flow Sensor Signal	(2) I	(2) —
(3) 3	(3) 0.5	(3) GN / WH	(3) 4622	(3) Engine Control Module LIN Bus 2	(3) I	(3) —
(4) 4	(4) 0.75	(4) BK / WH	(4) 1551	(4) Signal Ground	(4) I	(4) —

B80 Park Brake Switch

—

Connector Part Information
- Harness Type: Rear Window Defogger Wiring Harness
- OEM Connector: Not Available
- Service Connector: Service by Harness - See Part Catalog
- Description: 1-Way

Terminal Part Information

Terminal Type ID	Terminated Lead	Diagnostic Test Probe	Terminal Removal Tool
I	Not required	No Tool Required	No Tool Required

B80 Park Brake Switch

Pin	Size	Color	Circuit	Function	Terminal Type ID	Option
A	—	BU	1134	Park Brake Switch Signal	I	—

B87 Rearview Camera - Cutaway

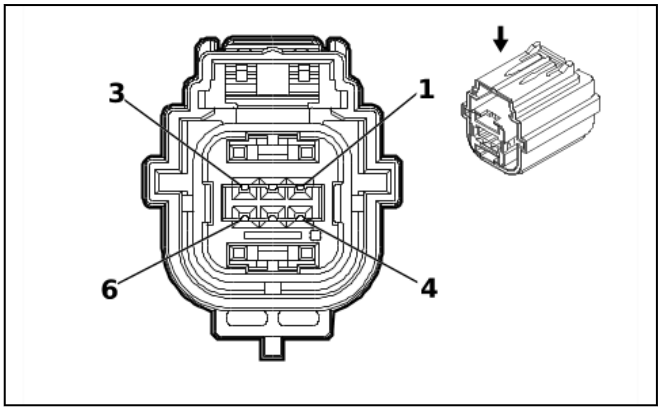

2133378

Connector Part Information

- Harness Type: Rearview Camera Wiring Harness
- OEM Connector: 1924211-1
- Service Connector: Service by Harness - See Part Catalog
- Description: 6-Way F 0.64 Series, Sealed(GY)

Terminal Part Information

Terminal Type ID	Terminated Lead	Diagnostic Test Probe	Terminal Removal Tool
I	Not required	J-35616-64B (L-BU)	No Tool Required

B87 Rearview Camera - Cutaway

Pin	Size	Color	Circuit	Function	Terminal Type ID	Option
(1) 1	(1) 0.5	(1) BU / YE	(1) 7641	(1) Frontview Camera 2 Signal [+]	(1) I	(1) —
(2) 2	(2) 0.5	(2) BN	(2) 6799	(2) Camera Shield Ground	(2) I	(2) —
(3) 3	(3) 0.5	(3) GN	(3) 24	(3) Backup Lamp Control	(3) I	(3) —
(4) 4	(4) 0.5	(4) WH / YE	(4) 7642	(4) Frontview Camera 2 Signal [-]	(4) I	(4) —
(5) 5	(5) 0.5	(5) BK / WH	(5) 351	(5) Signal Ground	(5) I	(5) —
(6) 6	(6) 0.5	(6) BK / WH	(6) 351	(6) Signal Ground	(6) I	(6) —

B87 Rearview Camera - (- Cutaway)

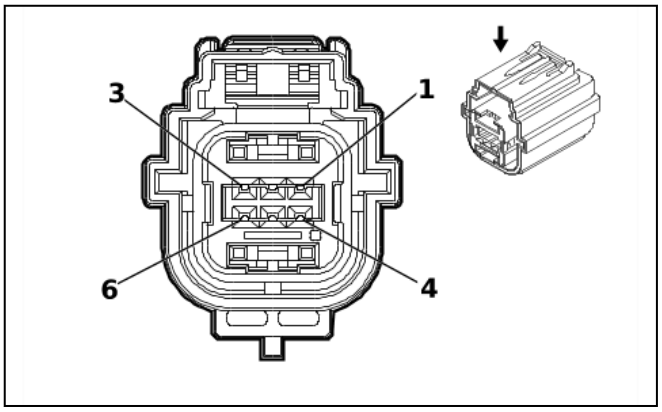

2133378

Connector Part Information
- Harness Type: Rear Door Door Wiring Harness
- OEM Connector: 1924211-1
- Service Connector: Service by Harness - See Part Catalog
- Description: 6-Way F 0.64 Series, Sealed(GY)

Terminal Part Information

Terminal Type ID	Terminated Lead	Diagnostic Test Probe	Terminal Removal Tool
I	Not required	J-35616-64B (L-BU)	No Tool Required

B87 Rearview Camera - (- Cutaway)

Pin	Size	Color	Circuit	Function	Terminal Type ID	Option
(1) 1	(1) 0.5	(1) BU / YE	(1) 7641	(1) Frontview Camera 2 Signal [+]	(1) I	(1) —
(2) 2	(2) 0.5	(2) BN	(2) 6799	(2) Camera Shield Ground	(2) I	(2) —
(3) 3	(3) 0.5	(3) GN / WH	(3) 24	(3) Backup Lamp Control	(3) I	(3) —
(4) 4	(4) 0.5	(4) WH / YE	(4) 7642	(4) Frontview Camera 2 Signal [-]	(4) I	(4) —
(5) 5	(5) 0.5	(5) BK / WH	(5) 351	(5) Signal Ground	(5) I	(5) —
(6) 6	(6) 0.5	(6) PK	(6) 239	(6) Run/Crank Ignition 1 Voltage	(6) I	(6) —

B99 Steering Wheel Angle Sensor

—

Connector Part Information
- Harness Type: Rear Window Defogger Wiring Harness
- OEM Connector: Not Available
- Service Connector: Service by Harness - See Part Catalog
- Description: 7-Way

Terminal Part Information

Terminal Type ID	Terminated Lead	Diagnostic Test Probe	Terminal Removal Tool
I	Not required	No Tool Required	No Tool Required

B99 Steering Wheel Angle Sensor

Pin	Size	Color	Circuit	Function	Terminal Type ID	Option
(1) 1	(1) —	(1) WH	(1) 6106	(1) High Speed GMLAN Serial Data [-] 2	(1) I	(1) —
(2) 2	(2) —	(2) WH	(2) 6106	(2) High Speed GMLAN Serial Data [-] 2	(2) I	(2) —
(3) 3	(3) —	(3) BU / YE	(3) 6105	(3) High Speed GMLAN Serial Data [+] 2	(3) I	(3) —
(4) 4	(4) —	(4) BU / YE	(4) 6105	(4) High Speed GMLAN Serial Data [+] 2	(4) I	(4) —
(5) 5	(5) —	(5) GN / BN	(5) 2087	(5) Multi-axis Acceleration Sensor Supply Voltage	(5) I	(5) —
(6) 6	(6) —	(6) BK / WH	(6) 351	(6) Signal Ground	(6) I	(6) —
(16) 16	(16) —	(16) BK / WH	(16) 351	(16) Signal Ground	(16) I	(16) —

B107 Accelerator Pedal Position Sensor

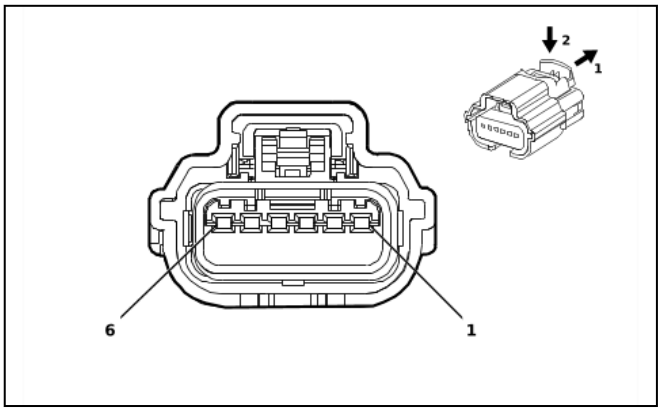

5157678

Connector Part Information

- Harness Type: Accelerator Control Wiring Harness
- OEM Connector: 35199156
- Service Connector: Service by Harness - See Part Catalog
- Description: 6-Way F 0.64 Series, Sealed(BK)

Terminal Part Information

Terminal Type ID	Terminated Lead	Diagnostic Test Probe	Terminal Removal Tool
I	Not required	J-35616-64B (L-BU)	No Tool Required

B107 Accelerator Pedal Position Sensor

Pin	Size	Color	Circuit	Function	Terminal Type ID	Option
(1) 1	(1) 0.35	(1) WH / RD	(1) 1164	(1) Accelerator Pedal Position 5V Reference 1	(1) I	(1) —
(2) 2	(2) 0.35	(2) YE / WH	(2) 1161	(2) Accelerator Pedal Position Signal 1	(2) I	(2) —
(3) 3	(3) 0.35	(3) BK / BU	(3) 1271	(3) Accelerator Pedal Position Low Reference 1	(3) I	(3) —
(4) 4	(4) 0.35	(4) BK / VT	(4) 1272	(4) Accelerator Pedal Position Low Reference 2	(4) I	(4) —

Pin	Size	Color	Circuit	Function	Terminal Type ID	Option
(5) 5	(5) 0.35	(5) GN / WH	(5) 1162	(5) Accelerator Pedal Position Signal 2	(5) I	(5) —
(6) 6	(6) 0.35	(6) BN / RD	(6) 1274	(6) Accelerator Pedal Position 5V Reference 2	(6) I	(6) —

B133 Brake Booster Fluid Flow Alarm Switch X1

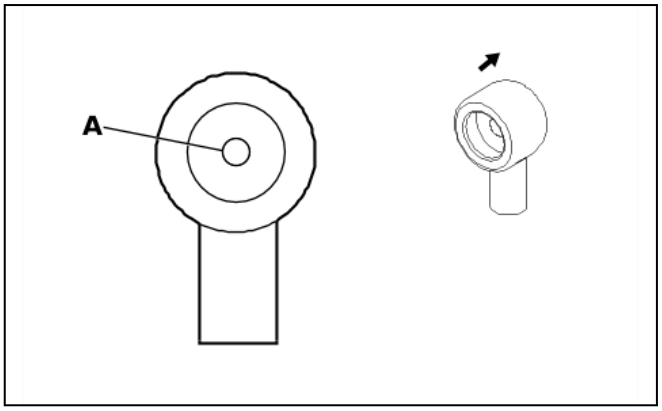

2004808

Connector Part Information

- Harness Type: Brake Fluid Level Indicator Wiring Harness
- OEM Connector: 6288440
- Service Connector: Service by Harness - See Part Catalog
- Description: 1-Way F Grip Series(BK)

Terminal Part Information

Terminal Type ID	Terminated Lead	Diagnostic Test Probe	Terminal Removal Tool
I	Not required	J-35616-4A (PU)	No Tool Required

B133 Brake Booster Fluid Flow Alarm Switch X1

Pin	Size	Color	Circuit	Function	Terminal Type ID	Option
A	0.5	BU / BK	1928	Brake Booster Fluid Flow Alarm Switch Signal	I	—

B133 Brake Booster Fluid Flow Alarm Switch X2

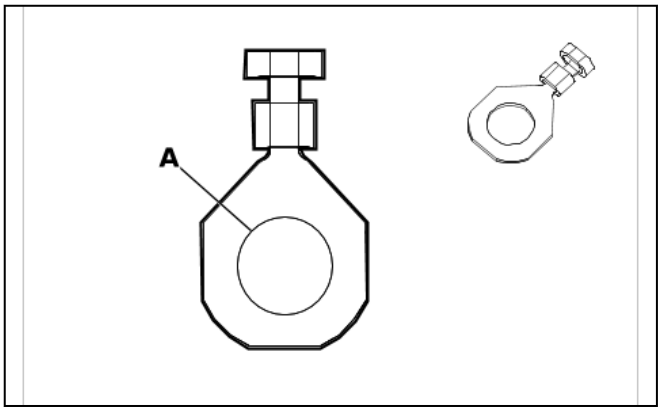

3240148

Connector Part Information
- Harness Type: Brake Fluid Level Indicator Wiring Harness
- OEM Connector: 12103516
- Service Connector: Service by Cable Assembly — See Part Catalog
- Description: 1-Way Ring Terminal

Terminal Part Information

Terminal Type ID	Terminated Lead	Diagnostic Test Probe	Terminal Removal Tool
I	Not required	No Tool Required	No Tool Required

B133 Brake Booster Fluid Flow Alarm Switch X2

Pin	Size	Color	Circuit	Function	Terminal Type ID	Option
A	0.5	BK	350	Ground	I	—

B150 Fuel Tank Pressure Sensor

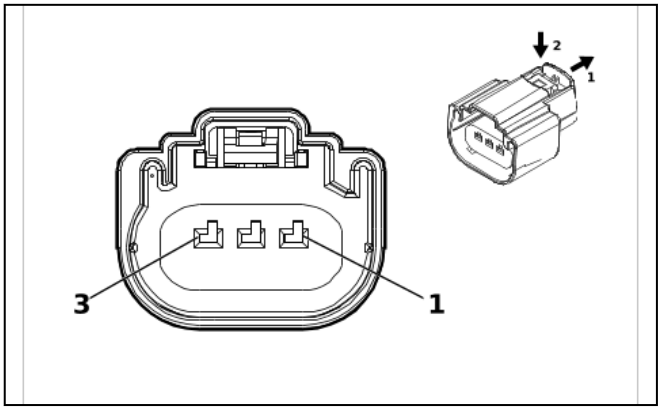

4589538

Connector Part Information
- Harness Type: Chassis Wiring Harness
- OEM Connector: 160073-3106
- Service Connector: 84569854
- Description: 3-Way F 1.5 MX Series, Sealed(GY)

Terminal Part Information

Terminal Type ID	Terminated Lead	Diagnostic Test Probe	Terminal Removal Tool
I	Not required	J-35616-14 (GN)	No Tool Required

B150 Fuel Tank Pressure Sensor

Pin	Size	Color	Circuit	Function	Terminal Type ID	Option
(1) 1	(1) 0.5	(1) BU / WH	(1) 890	(1) Fuel Tank Pressure Sensor Signal	(1) I	(1) —
(2) 2	(2) 0.5	(2) BK / BN	(2) 6284	(2) Fuel Tank Pressure Sensor Low Reference	(2) I	(2) —
(3) 3	(3) 0.5	(3) YE / RD	(3) 2709	(3) Fuel Tank Pressure Sensor 5V Reference	(3) I	(3) —

B153D Seat Belt Buckle - Driver

—

Connector Part Information
- Harness Type: Rear Window Defogger Wiring Harness
- OEM Connector: Not Available
- Service Connector: Service by Harness - See Part Catalog
- Description: 2-Way

Terminal Part Information

Terminal Type ID	Terminated Lead	Diagnostic Test Probe	Terminal Removal Tool
I	Not required	No Tool Required	No Tool Required

B153D Seat Belt Buckle - Driver

Pin	Size	Color	Circuit	Function	Terminal Type ID	Option
A	—	PK	5057	Seat Position Switch Low Reference	I	—
B	—	TN / WH	238	Driver Seat Belt Switch Signal	I	—

B153P Seat Belt Buckle - Passenger

—

Connector Part Information
- Harness Type: Rear Window Defogger Wiring Harness
- OEM Connector: Not Available
- Service Connector: Service by Harness - See Part Catalog
- Description: 4-Way

Terminal Part Information

Terminal Type ID	Terminated Lead	Diagnostic Test Probe	Terminal Removal Tool
I	Not required	No Tool Required	No Tool Required

B153P Seat Belt Buckle - Passenger

Pin	Size	Color	Circuit	Function	Terminal Type ID	Option
(1) 1	(1) —	(1) PK	(1) 1361	(1) Passenger Seat Belt Switch Low Reference	(1) I	(1) —
(2) 2	(2) —	(2) OG / BN	(2) 7571	(2) Passenger Seat Belt Reminder Signal	(2) I	(2) —
A	—	PK	1361	Passenger Seat Belt Switch Low Reference	I	—
B	—	OG	1362	Passenger Seat Belt Switch Signal	I	—

B174W Frontview Camera - Windshield

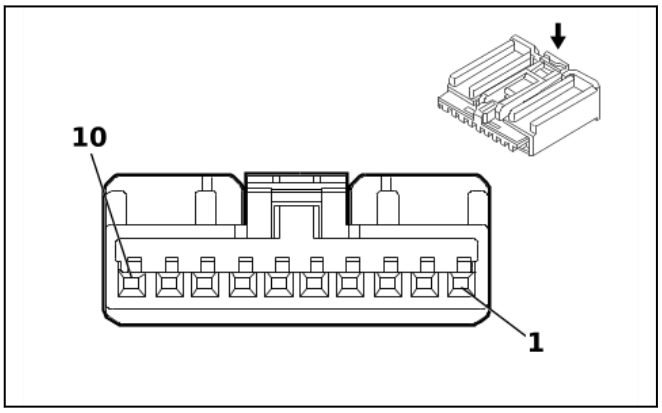

1862241

Connector Part Information

- Harness Type: Roof Console Wiring Harness
- OEM Connector: AIT2PB-10-1AK
- Service Connector: 13576634
- Description: 10-Way F 0.64 Kaizen Series(BK)

Terminal Part Information

Terminal Type ID	Terminated Lead	Diagnostic Test Probe	Terminal Removal Tool
I	13575742	J-35616-64B (L-BU)	J-38125-215A

B174W Frontview Camera - Windshield

Pin	Size	Color	Circuit	Function	Terminal Type ID	Option
(1) 1	(1) 0.5	(1) BK	(1) 1850	(1) Ground	(1) I	(1) —
2	—	—	—	Not Occupied	—	—
(3) 3	(3) 0.5	(3) RD / GN	(3) 3140	(3) Battery Positive Voltage	(3) I	(3) —
(4) 4	(4) 0.5	(4) WH	(4) 3152	(4) Lane Departure Warning Indicator Control	(4) I	(4) —
5 - 6	—	—	—	Not Occupied	—	—
(7) 7	(7) 0.5	(7) GN	(7) 5060	(7) Low Speed GMLAN Serial Data	(7) I	(7) —
8 - 9	—	—	—	Not Occupied	—	—
(10) 10	(10) 0.5	(10) GY / WH	(10) 3153	(10) Lane Departure Warning Disable Switch Signal	(10) I	(10) —

B176 Multi-axis Acceleration Sensor Module

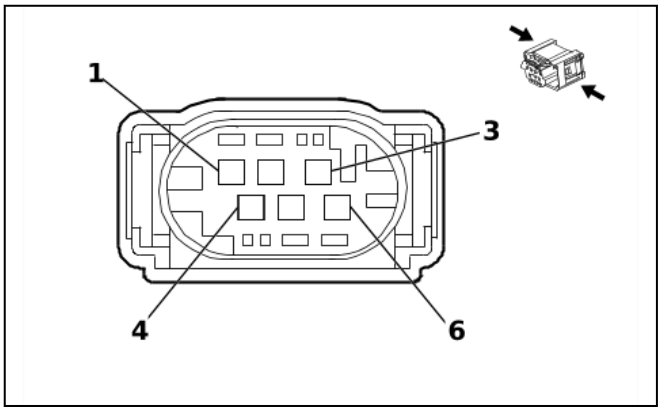

831393

Connector Part Information

- Harness Type: Body Wiring Harness
- OEM Connector: 1-967616-1
- Service Connector: 15306420
- Description: 6-Way F 0.64 Micro-Quadlock Series, Sealed(BK)

Terminal Part Information

Terminal Type ID	Terminated Lead	Diagnostic Test Probe	Terminal Removal Tool
I	Not required	J-35616-64B (L-BU)	No Tool Required

B176 Multi-axis Acceleration Sensor Module

Pin	Size	Color	Circuit	Function	Terminal Type ID	Option
(1) 1	(1) 0.5	(1) BK / BN	(1) 6045	(1) Steering Angle Sensor Low Reference	(1) I	(1) —
2 - 3	—	—	—	Not Occupied	—	—
(4) 4	(4) 0.5	(4) BU / YE	(4) 6105	(4) High Speed GMLAN Serial Data [+] 2	(4) I	(4) —
(5) 5	(5) 0.5	(5) WH	(5) 6106	(5) High Speed GMLAN Serial Data [-] 2	(5) I	(5) —
(6) 6	(6) 0.5	(6) BK / WH	(6) 2751	(6) Signal Ground	(6) I	(6) —

B218L Side Object Sensor Module - Left (UFT)

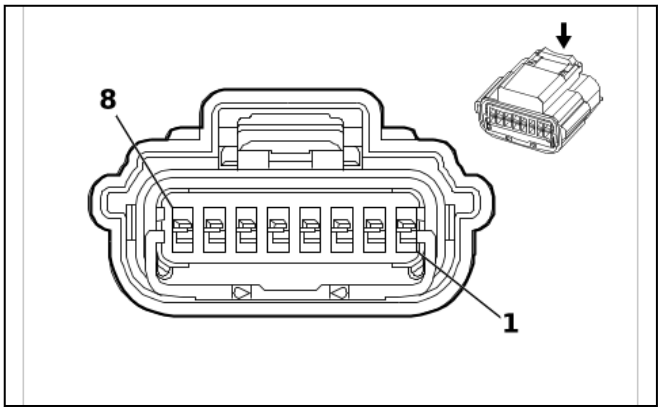

2581486

Connector Part Information

- Harness Type: Rear Object Alarm Sensor Wiring Harness
- OEM Connector: ATSSPB-C0805G-1AK
- Service Connector: Service by Harness - See Part Catalog
- Description: 8-Way F 0.64 Series, Sealed(BK)

Terminal Part Information

Terminal Type ID	Terminated Lead	Diagnostic Test Probe	Terminal Removal Tool
I	Not required	J-35616-64B (L-BU)	No Tool Required

B218L Side Object Sensor Module - Left (UFT)

Pin	Size	Color	Circuit	Function	Terminal Type ID	Option
1	—	—	—	Not Occupied	—	—
(2) 2	(2) 0.5	(2) GN	(2) 5060	(2) Low Speed GMLAN Serial Data	(2) I	(2) —
3	—	—	—	Not Occupied	—	—
(4) 4	(4) 0.5	(4) GY / YE	(4) 5853	(4) Driver Side Side Object Detection LED Signal 1	(4) I	(4) —
(5) 5	(5) 0.5	(5) RD / GN	(5) 3140	(5) Battery Positive Voltage	(5) I	(5) —
6	—	—	—	Not Occupied	—	—
(7) 7	(7) 0.5	(7) GN / BK	(7) 5060	(7) Low Speed GMLAN Serial Data	(7) I	(7) —
(8) 8	(8) 0.5	(8) BK	(8) 2150	(8) Ground	(8) I	(8) —

B218R Side Object Sensor Module - Right (UFT)

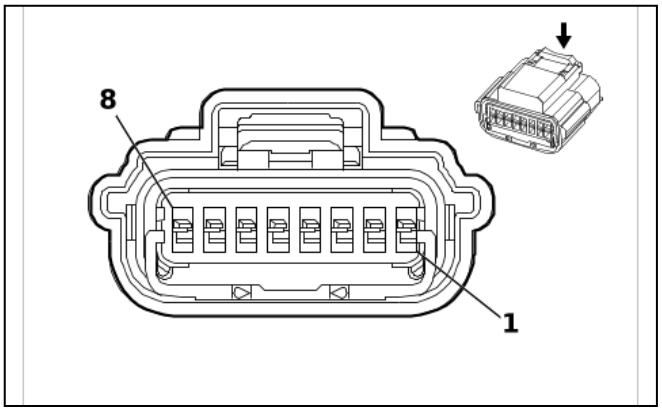

2581486

Connector Part Information

- Harness Type: Rear Object Alarm Sensor Wiring Harness
- OEM Connector: ATSSPB-C0805H-1AK
- Service Connector: Service by Harness - See Part Catalog
- Description: 8-Way F 0.64 Series, Sealed(BK)

Terminal Part Information

Terminal Type ID	Terminated Lead	Diagnostic Test Probe	Terminal Removal Tool
I	Not required	J-35616-64B (L-BU)	No Tool Required

B218R Side Object Sensor Module - Right (UFT)

Pin	Size	Color	Circuit	Function	Terminal Type ID	Option
1 - 2	—	—	—	Not Occupied	—	—
(3) 3	(3) 0.5	(3) BK	(3) 2150	(3) Ground	(3) I	(3) —
(4) 4	(4) 0.5	(4) GY	(4) 5861	(4) Passenger Side Object Detection LED Signal 1	(4) I	(4) —
(5) 5	(5) 0.5	(5) RD / GN	(5) 3140	(5) Battery Positive Voltage	(5) I	(5) —
6	—	—	—	Not Occupied	—	—
(7) 7	(7) 0.5	(7) GN / BK	(7) 5060	(7) Low Speed GMLAN Serial Data	(7) I	(7) —
(8) 8	(8) 0.5	(8) BK	(8) 2150	(8) Ground	(8) I	(8) —

B303 Transmission Range Sensor

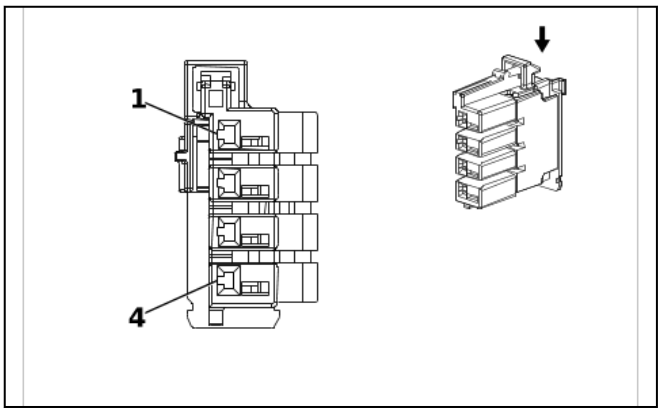

4364148

Connector Part Information

- Harness Type: Automatic Transmission Wiring Harness
- OEM Connector: 2289524-1
- Service Connector: Service by Harness - See Part Catalog
- Description: 4-Way F 1.2 MCON Series(BN)

Terminal Part Information

Terminal Type ID	Terminated Lead	Diagnostic Test Probe	Terminal Removal Tool
I	Not required	J-35616-16 (L-GN)	No Tool Required

B303 Transmission Range Sensor

Pin	Size	Color	Circuit	Function	Terminal Type ID	Option
(1) 1	(1) 0.5	(1) GN / YE	(1) 3337	(1) Transmission Internal Mode Switch Mode Control Y	(1) I	(1) —
(2) 2	(2) 0.5	(2) WH / RD	(2) 596	(2) 5V Reference	(2) I	(2) —
(3) 3	(3) 0.5	(3) BK / GY	(3) 3927	(3) Transmission Internal Mode Switch Feedback Signal	(3) I	(3) —
(4) 4	(4) 0.5	(4) BU / WH	(4) 3338	(4) Transmission Internal Mode Switch Mode Control X	(4) I	(4) —

B306E Parking Assist Sensor - Rear Left Outer (UD7)

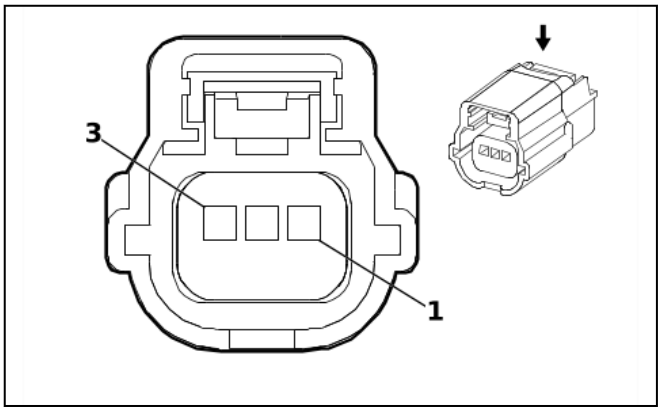

1664596

Connector Part Information

- Harness Type: Rear Object Alarm Sensor Wiring Harness
- OEM Connector: 31403-3710
- Service Connector: Service by Harness - See Part Catalog
- Description: 3-Way F 0.64 Series, Sealed(BK)

Terminal Part Information

Terminal Type ID	Terminated Lead	Diagnostic Test Probe	Terminal Removal Tool
I	Not required	J-35616-64B (L-BU)	No Tool Required

B306E Parking Assist Sensor - Rear Left Outer (UD7)

Pin	Size	Color	Circuit	Function	Terminal Type ID	Option
(1) 1	(1) 0.5 (1) 0.5	(1) BN / WH (1) BU	(1) 2374 (1) 2374	(1) Object Sensor Voltage Reference (1) Object Sensor Voltage Reference	(1) I (1) I	(1) - UFT (1) UFT
(2) 2	(2) 0.5 (2) 0.5	(2) BK / GY (2) GY	(2) 2379 (2) 2379	(2) Object Sensor Low Reference (2) Object Sensor Low Reference	(2) I (2) I	(2) - UFT (2) UFT
(3) 3	(3) 0.5	(3) YE	(3) 2375	(3) Left Rear Outer Parking Assist Sensor Signal	(3) I	(3) —

B306F Parking Assist Sensor - Rear Left Middle (UD7)

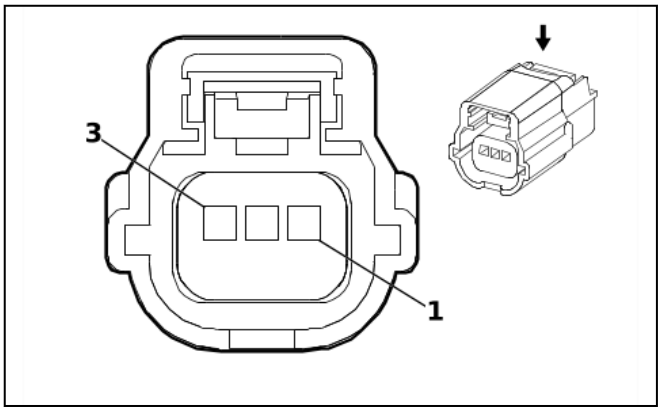

1664596

Connector Part Information

- Harness Type: Rear Object Alarm Sensor Wiring Harness
- OEM Connector: 31403-3710
- Service Connector: Service by Harness - See Part Catalog
- Description: 3-Way F 0.64 Series, Sealed(BK)

Terminal Part Information

Terminal Type ID	Terminated Lead	Diagnostic Test Probe	Terminal Removal Tool
I	Not required	J-35616-64B (L-BU)	No Tool Required

B306F Parking Assist Sensor - Rear Left Middle (UD7)

Pin	Size	Color	Circuit	Function	Terminal Type ID	Option
(1) 1	(1) 0.5 (1) 0.5	(1) BN / WH (1) BU	(1) 2374 (1) 2374	(1) Object Sensor Voltage Reference (1) Object Sensor Voltage Reference	(1) I (1) I	(1) - UFT (1) UFT
(2) 2	(2) 0.5 (2) 0.5	(2) BK / GY (2) GY	(2) 2379 (2) 2379	(2) Object Sensor Low Reference (2) Object Sensor Low Reference	(2) I (2) I	(2) - UFT (2) UFT
(3) 3	(3) 0.5 (3) 0.5	(3) YE / BU (3) OG	(3) 2376 (3) 2376	(3) Left Rear Middle Parking Assist Sensor Signal (3) Left Rear Middle Parking Assist Sensor Signal	(3) I (3) I	(3) - UFT (3) UFT

B306G Parking Assist Sensor - Rear Right Middle (UD7)

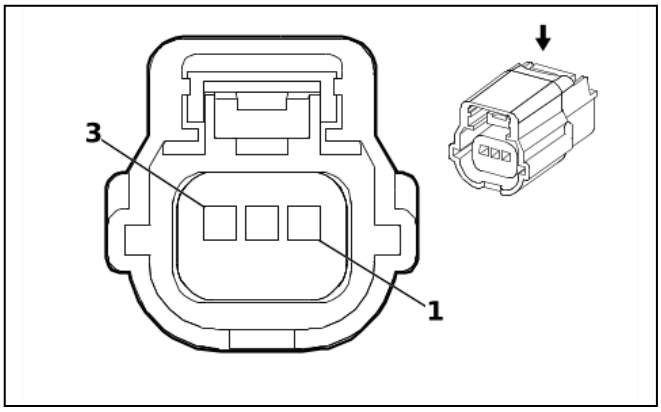

1664596

Connector Part Information

- Harness Type: Rear Object Alarm Sensor Wiring Harness
- OEM Connector: 31403-3710
- Service Connector: Service by Harness - See Part Catalog
- Description: 3-Way F 0.64 Series, Sealed(BK)

Terminal Part Information

Terminal Type ID	Terminated Lead	Diagnostic Test Probe	Terminal Removal Tool
I	Not required	J-35616-64B (L-BU)	No Tool Required

B306G Parking Assist Sensor - Rear Right Middle (UD7)

Pin	Size	Color	Circuit	Function	Terminal Type ID	Option
(1) 1	(1) 0.5 (1) 0.5	(1) BN / WH (1) BU	(1) 2374 (1) 2374	(1) Object Sensor Voltage Reference (1) Object Sensor Voltage Reference	(1) I (1) I	(1) - UFT (1) UFT
(2) 2	(2) 0.5 (2) 0.5	(2) BK / GY (2) GY	(2) 2379 (2) 2379	(2) Object Sensor Low Reference (2) Object Sensor Low Reference	(2) I (2) I	(2) - UFT (2) UFT
(3) 3	(3) 0.5 (3) 0.5	(3) GN (3) YE / WH	(3) 2377 (3) 2377	(3) Right Rear Middle Parking Assist Sensor Signal (3) Right Rear Middle Parking Assist Sensor Signal	(3) I (3) I	(3) - UFT (3) UFT

B306H Parking Assist Sensor - Rear Right Outer (UD7)

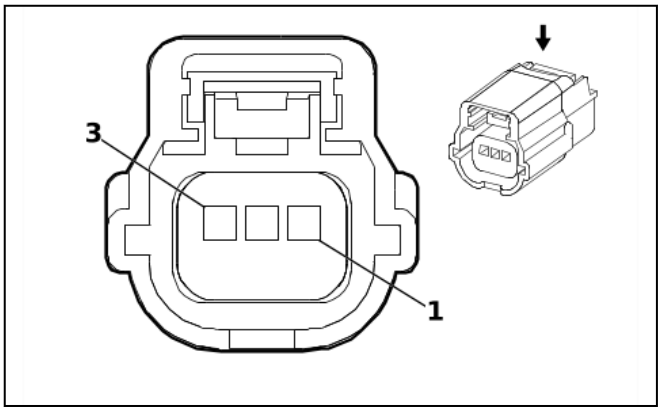

1664596

Connector Part Information

- Harness Type: Rear Object Alarm Sensor Wiring Harness
- OEM Connector: 31403-3710
- Service Connector: Service by Harness - See Part Catalog
- Description: 3-Way F 0.64 Series, Sealed(BK)

Terminal Part Information

Terminal Type ID	Terminated Lead	Diagnostic Test Probe	Terminal Removal Tool
I	Not required	J-35616-64B (L-BU)	No Tool Required

B306H Parking Assist Sensor - Rear Right Outer (UD7)

Pin	Size	Color	Circuit	Function	Terminal Type ID	Option
(1) 1	(1) 0.5 (1) 0.5	(1) BN / WH (1) BU	(1) 2374 (1) 2374	(1) Object Sensor Voltage Reference (1) Object Sensor Voltage Reference	(1) I (1) I	(1) - UFT (1) UFT
(2) 2	(2) 0.5 (2) 0.5	(2) BK / GY (2) GY	(2) 2379 (2) 2379	(2) Object Sensor Low Reference (2) Object Sensor Low Reference	(2) I (2) I	(2) - UFT (2) UFT
(3) 3	(3) 0.5 (3) 0.5	(3) YE / VT (3) PU	(3) 2378 (3) 2378	(3) Right Rear Outer Parking Assist Sensor Signal (3) Right Rear Outer Parking Assist Sensor Signal	(3) I (3) I	(3) - UFT (3) UFT

C1 Battery X1 - Positive

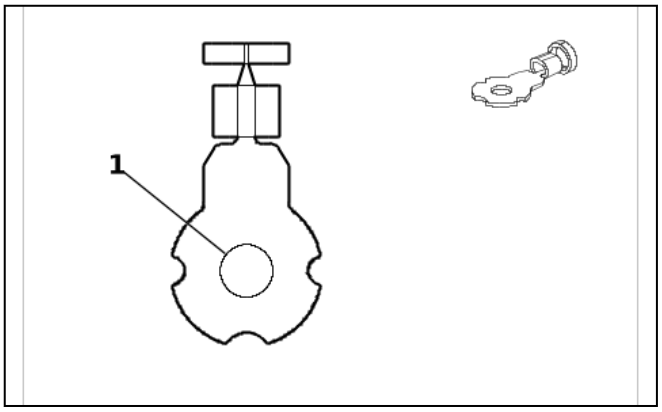

5693569

Connector Part Information
- Harness Type: Battery Positive Cable
- OEM Connector: 12177185
- Service Connector: Service by Cable Assembly — See Part Catalog
- Description: 1-Way Ring Terminal

Terminal Part Information

Terminal Type ID	Terminated Lead	Diagnostic Test Probe	Terminal Removal Tool
I	Not required	No Tool Required	No Tool Required

C1 Battery X1 - Positive

Pin	Size	Color	Circuit	Function	Terminal Type ID	Option
(1) 1	(1) 32 (1) 8	(1) RD (1) RD / BK	(1) 1 (1) 1	(1) Unfused Battery Positive Voltage (1) Unfused Battery Positive Voltage	(1) I	(1) — (1) —

C1 Battery X2 - Negative

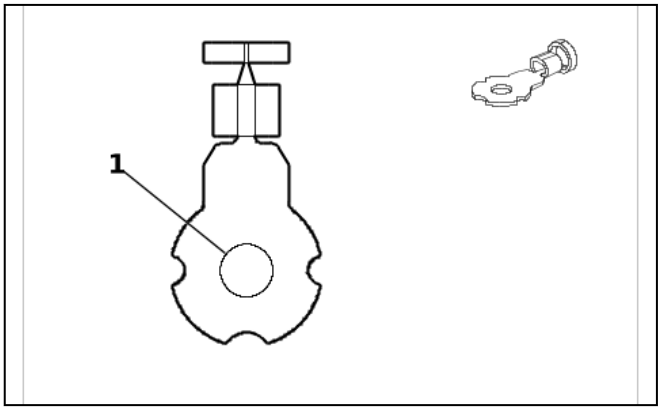

5693569

Connector Part Information
- Harness Type: Battery Negative Cable
- OEM Connector: 12177185
- Service Connector: Service by Cable Assembly — See Part Catalog
- Description: 1-Way Ring Terminal

Terminal Part Information

Terminal Type ID	Terminated Lead	Diagnostic Test Probe	Terminal Removal Tool
I	Not required	No Tool Required	No Tool Required

C1 Battery X2 - Negative

Pin	Size	Color	Circuit	Function	Terminal Type ID	Option
(1) 1	(1) 19 (1) 32	(1) BK (1) BK	(1) 50 (1) 50	(1) Ground (1) Ground	(1) I	(1) — (1) —

C1B Battery - Auxiliary X1

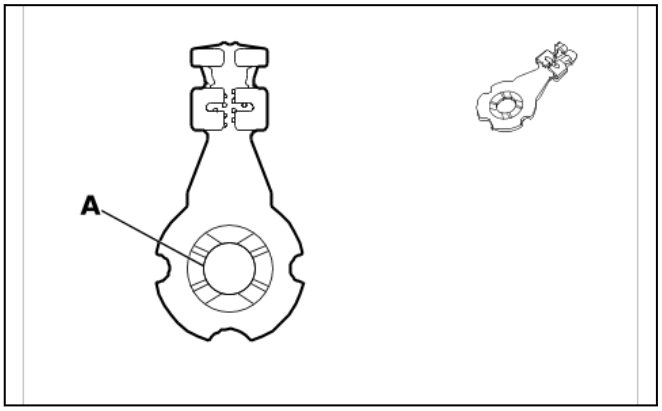

6056264

Connector Part Information

- Harness Type: Auxiliary Battery Positive Cable
- OEM Connector: 12146464
- Service Connector: Service by Cable Assembly — See Part Catalog
- Description: 1-Way Ring Terminal

Terminal Part Information

Terminal Type ID	Terminated Lead	Diagnostic Test Probe	Terminal Removal Tool
I	Not required	No Tool Required	No Tool Required

C1B Battery - Auxiliary X1

Pin	Size	Color	Circuit	Function	Terminal Type ID	Option
A	13	RD	1	Unfused Battery Positive Voltage	I	—

C1B Battery - Auxiliary X2

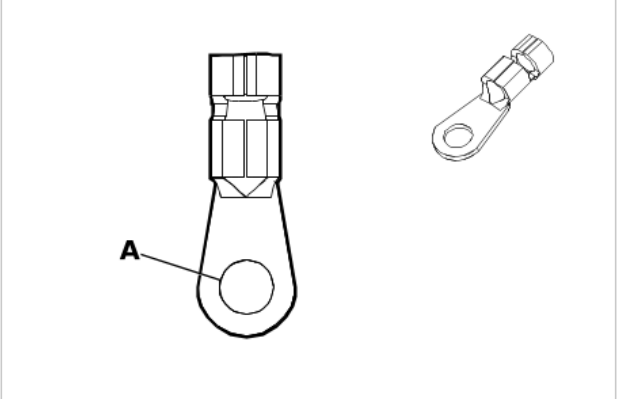

2268698

Connector Part Information
- Harness Type: Auxiliary Battery Negative Cable
- OEM Connector: 12146466
- Service Connector: Service by Cable Assembly — See Part Catalog
- Description: 1-Way Ring Terminal

Terminal Part Information

Terminal Type ID	Terminated Lead	Diagnostic Test Probe	Terminal Removal Tool
I	Not required	No Tool Required	No Tool Required

C1B Battery - Auxiliary X2

Pin	Size	Color	Circuit	Function	Terminal Type ID	Option
(1) 1	(1) 32	(1) BK	(1) 50	(1) Ground	(1) I	(1) —
A	—	BK	50	Ground	I	—

E2LF Side Marker Lamp - Left Front

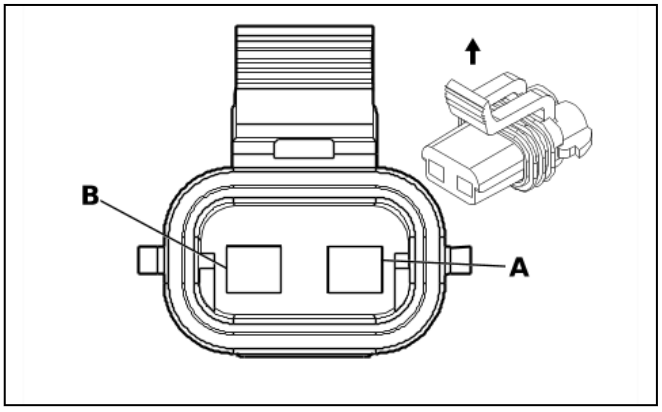

68721

Connector Part Information
- Harness Type: Forward Lamp Wiring Harness
- OEM Connector: 15300027
- Service Connector: 12101855
- Description: 2-Way F 280 Metri-Pack Series, Sealed(BK)

Terminal Part Information

Terminal Type ID	Terminated Lead	Diagnostic Test Probe	Terminal Removal Tool
I	Not required	J-35616-4A (PU)	No Tool Required
II	Not required	No Tool Required	No Tool Required

E2LF Side Marker Lamp - Left Front

Pin	Size	Color	Circuit	Function	Terminal Type ID	Option
A	0.5	GY / BN	2309	Front Park Lamp Control	I	—
B	0.5	GY / BN	2309	Front Park Lamp Control	I	—
C	—	BK	650	Ground	II	—

E2RF Side Marker Lamp - Right Front

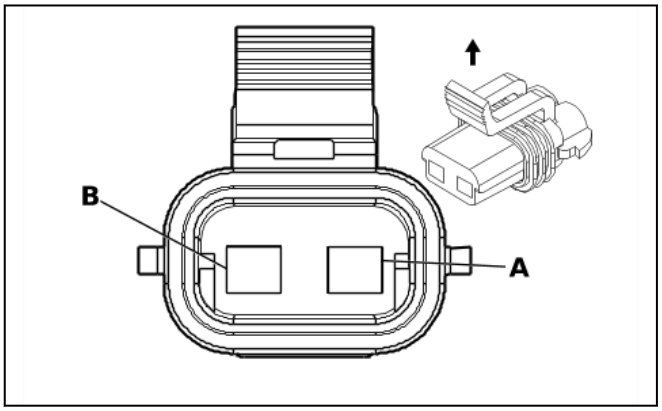

68721

Connector Part Information

- Harness Type: Forward Lamp Wiring Harness
- OEM Connector: 15300027
- Service Connector: 12101855
- Description: 2-Way F 280 Metri-Pack Series, Sealed(BK)

Terminal Part Information

Terminal Type ID	Terminated Lead	Diagnostic Test Probe	Terminal Removal Tool
I	Not required	J-35616-4A (PU)	No Tool Required

E2RF Side Marker Lamp - Right Front

Pin	Size	Color	Circuit	Function	Terminal Type ID	Option
A	0.5	GY / BN	2309	Front Park Lamp Control	I	—
B	0.5	BK	650	Ground	I	—

E4E Headlamp - Left High Beam

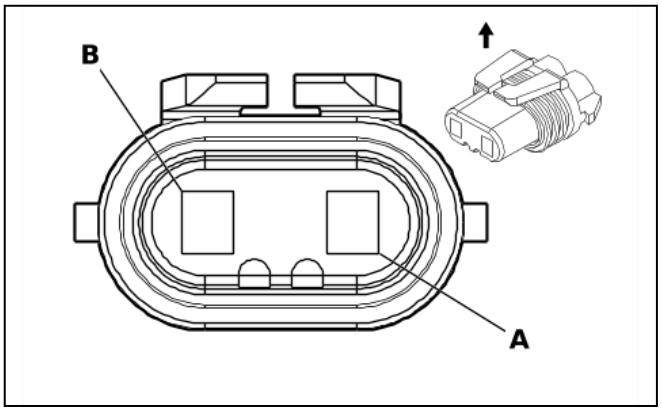

684797

Connector Part Information
- Harness Type: Forward Lamp Wiring Harness
- OEM Connector: 12059183
- Service Connector: 12101898
- Description: 2-Way F 280 Metri-Pack Series, Sealed(BK)

Terminal Part Information

Terminal Type ID	Terminated Lead	Diagnostic Test Probe	Terminal Removal Tool
I	Not required	J-35616-4A (PU)	No Tool Required

E4E Headlamp - Left High Beam

Pin	Size	Color	Circuit	Function	Terminal Type ID	Option
A	0.75	WH	711	Left Headlamp High Beam Control	I	—
B	0.75	BK	250	Ground	I	—

E4F Headlamp - Right High Beam

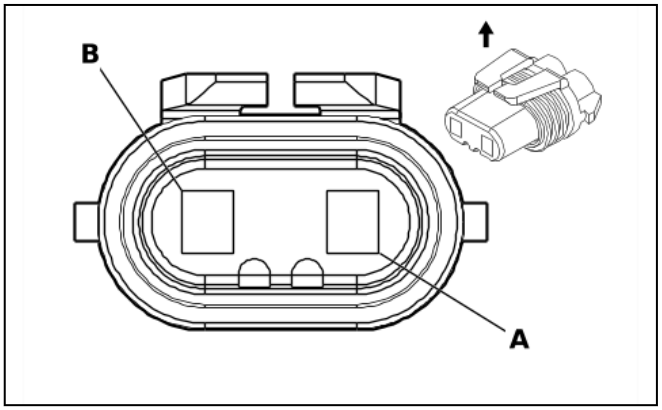

684797

Connector Part Information
- Harness Type: Forward Lamp Wiring Harness
- OEM Connector: 12059183
- Service Connector: 12101898
- Description: 2-Way F 280 Metri-Pack Series, Sealed(BK)

Terminal Part Information

Terminal Type ID	Terminated Lead	Diagnostic Test Probe	Terminal Removal Tool
I	Not required	J-35616-4A (PU)	No Tool Required

E4F Headlamp - Right High Beam

Pin	Size	Color	Circuit	Function	Terminal Type ID	Option
A	0.75	WH	311	Right Headlamp High Beam Control	I	—
B	0.75	BK	650	Ground	I	—

E4G Headlamp - Left Low Beam

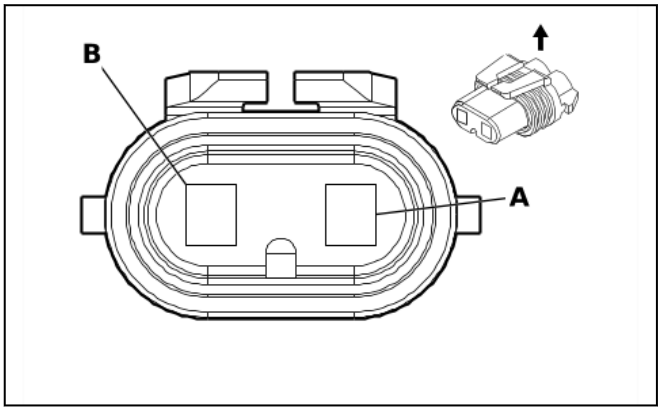

684796

Connector Part Information

- Harness Type: Forward Lamp Wiring Harness
- OEM Connector: 12059181
- Service Connector: 19301866
- Description: 2-Way F 280 Metri-Pack Series, Sealed(GY)

Terminal Part Information

Terminal Type ID	Terminated Lead	Diagnostic Test Probe	Terminal Removal Tool
I	Not required	J-35616-4A (PU)	No Tool Required

E4G Headlamp - Left Low Beam

Pin	Size	Color	Circuit	Function	Terminal Type ID	Option
A	0.75	YE	712	Left Headlamp Low Beam Control	I	—
B	0.75	BK	250	Ground	I	—

E4H Headlamp - Right Low Beam

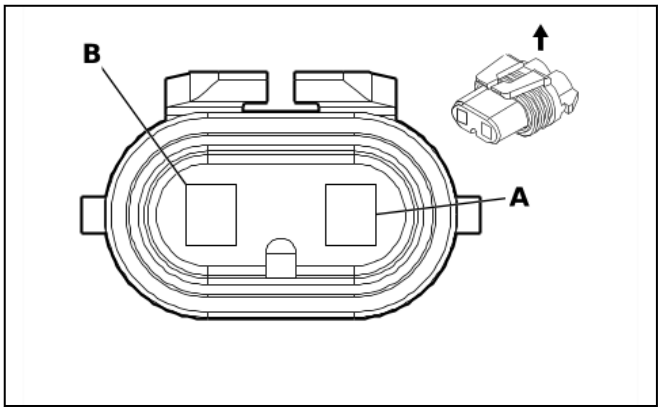

684796

Connector Part Information
- Harness Type: Forward Lamp Wiring Harness
- OEM Connector: 12059181
- Service Connector: 19301866
- Description: 2-Way F 280 Metri-Pack Series, Sealed(GY)

Terminal Part Information

Terminal Type ID	Terminated Lead	Diagnostic Test Probe	Terminal Removal Tool
I	Not required	J-35616-4A (PU)	No Tool Required

E4H Headlamp - Right Low Beam

Pin	Size	Color	Circuit	Function	Terminal Type ID	Option
A	0.75	YE	312	Right Headlamp Low Beam Control	I	—
B	0.75	BK	650	Ground	I	—

E4N Park/Turn Signal Lamp - Left

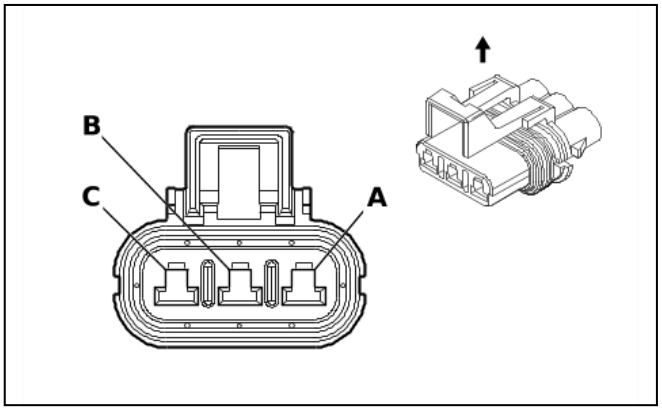

847206

Connector Part Information
- Harness Type: Forward Lamp Wiring Harness
- OEM Connector: 12040977
- Service Connector: 12085492
- Description: 3-Way F 280 Metri-Pack Series, Sealed(BK)

Terminal Part Information

Terminal Type ID	Terminated Lead	Diagnostic Test Probe	Terminal Removal Tool
I	Not required	J-35616-4A (PU)	No Tool Required

E4N Park/Turn Signal Lamp - Left

Pin	Size	Color	Circuit	Function	Terminal Type ID	Option
A	0.75	BU / WH	1314	Left Front Turn Signal Lamp Control	I	—
B	0.5	GY / BN	2309	Front Park Lamp Control	I	—
C	0.5	BK	250	Ground	I	—

E4P Park/Turn Signal Lamp - Right

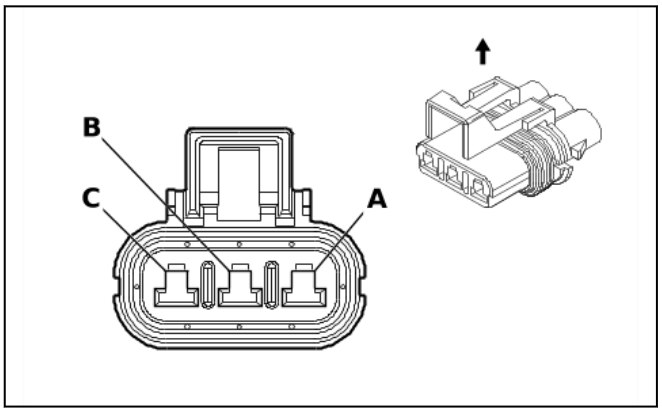

847206

Connector Part Information

- Harness Type: Forward Lamp Wiring Harness
- OEM Connector: 12040977
- Service Connector: 12085492
- Description: 3-Way F 280 Metri-Pack Series, Sealed(BK)

Terminal Part Information

Terminal Type ID	Terminated Lead	Diagnostic Test Probe	Terminal Removal Tool
I	Not required	J-35616-4A (PU)	No Tool Required

E4P Park/Turn Signal Lamp - Right

Pin	Size	Color	Circuit	Function	Terminal Type ID	Option
A	0.75	GN / VT	1315	Right Front Turn Signal Lamp Control	I	—
B	0.5	GY / BN	2309	Front Park Lamp Control	I	—
C	0.5	BK	650	Ground	I	—

E5A Backup Lamp - Left

—

Connector Part Information
- Harness Type: Rear Window Defogger Wiring Harness
- OEM Connector: Not Available
- Service Connector: Service by Harness - See Part Catalog
- Description: 2-Way

Terminal Part Information

Terminal Type ID	Terminated Lead	Diagnostic Test Probe	Terminal Removal Tool
I	Not required	No Tool Required	No Tool Required

E5A Backup Lamp - Left

Pin	Size	Color	Circuit	Function	Terminal Type ID	Option
A	—	GN	24	Backup Lamp Control	I	—
G	—	BK	850	Ground	I	—

E5B Backup Lamp - Right

—

Connector Part Information
- Harness Type: Rear Window Defogger Wiring Harness
- OEM Connector: Not Available
- Service Connector: Service by Harness - See Part Catalog
- Description: 2-Way

Terminal Part Information

Terminal Type ID	Terminated Lead	Diagnostic Test Probe	Terminal Removal Tool
I	Not required	No Tool Required	No Tool Required

E5B Backup Lamp - Right

Pin	Size	Color	Circuit	Function	Terminal Type ID	Option
A	—	GN	24	Backup Lamp Control	I	—
G	—	BK	1050	Ground	I	—

E5S Tail/Stop and Turn Signal Lamp - Left

—

Connector Part Information
- Harness Type: Rear Window Defogger Wiring Harness
- OEM Connector: Not Available
- Service Connector: Service by Harness - See Part Catalog
- Description: 4-Way

Terminal Part Information

Terminal Type ID	Terminated Lead	Diagnostic Test Probe	Terminal Removal Tool
I	Not required	No Tool Required	No Tool Required

E5S Tail/Stop and Turn Signal Lamp - Left

Pin	Size	Color	Circuit	Function	Terminal Type ID	Option
A	—	BN	2509	Left Rear Park Lamp Control	I	—
B	—	YE	618	Left Rear Turn Signal Lamp Control	I	—
D	—	BK	850	Ground	I	—
G	—	BK	850	Ground	I	—

E5T Tail/Stop and Turn Signal Lamp - Right

—

Connector Part Information

- Harness Type: Rear Window Defogger Wiring Harness
- OEM Connector: Not Available
- Service Connector: Service by Harness - See Part Catalog
- Description: 4-Way

Terminal Part Information

Terminal Type ID	Terminated Lead	Diagnostic Test Probe	Terminal Removal Tool
I	Not required	No Tool Required	No Tool Required

E5T Tail/Stop and Turn Signal Lamp - Right

Pin	Size	Color	Circuit	Function	Terminal Type ID	Option
A	—	BN	2609	Right Rear Park Lamp Control	I	—
B	— —	BN GN	2609 619	Right Rear Park Lamp Control Right Rear Turn Signal Lamp Control	I I	— —
D	—	BK	1050	Ground	I	—
G	—	BK	1050	Ground	I	—

E6 Center High Mounted Stop Lamp

—

Connector Part Information

- Harness Type: Rear Window Defogger Wiring Harness
- OEM Connector: Not Available
- Service Connector: Service by Harness - See Part Catalog
- Description: 2-Way

Terminal Part Information

Terminal Type ID	Terminated Lead	Diagnostic Test Probe	Terminal Removal Tool
I	Not required	No Tool Required	No Tool Required

E6 Center High Mounted Stop Lamp

Pin	Size	Color	Circuit	Function	Terminal Type ID	Option
A	—	BU	1320	Center High Mounted Stop Lamp Control 2	I	—
B	—	BK	850	Ground	I	—

E7 License Plate Lamp

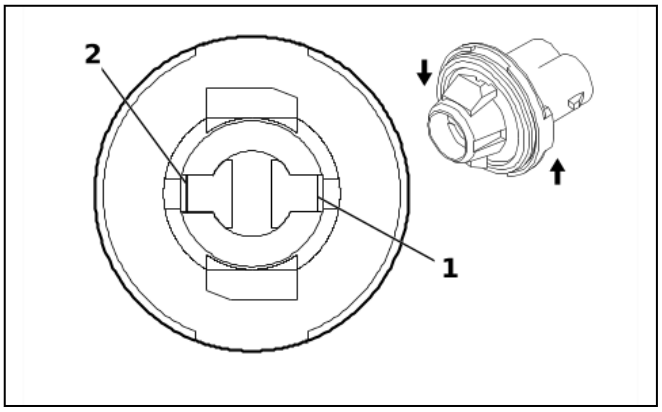

5153536

Connector Part Information
- Harness Type: Rear Door Door Wiring Harness
- OEM Connector: 15324946
- Service Connector: Service by Harness - See Part Catalog
- Description: 2-Way F Lamp Socket Wedge Base, Type W-2(D-GY)

Terminal Part Information

Terminal Type ID	Terminated Lead	Diagnostic Test Probe	Terminal Removal Tool
I	Not required	No Tool Required	No Tool Required

E7 License Plate Lamp

Pin	Size	Color	Circuit	Function	Terminal Type ID	Option
1 - 2	—	—	—	Not Occupied	—	—
A	—	BN	2509	Left Rear Park Lamp Control	I	—
B	—	BK	1050	Ground	I	—

E18L Rear Defogger Grid - Left X1

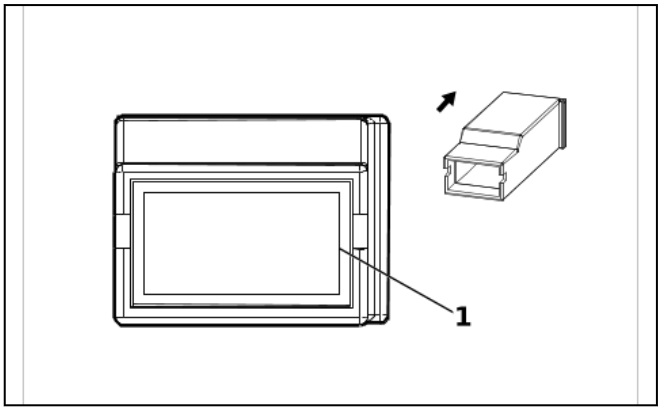

2500421

Connector Part Information
- Harness Type: Rear Window Defogger Wiring Harness
- OEM Connector: 12103107
- Service Connector: Service by Harness - See Part Catalog
- Description: 1-Way F 6.3 Positive Lock Series(BK)

Terminal Part Information

Terminal Type ID	Terminated Lead	Diagnostic Test Probe	Terminal Removal Tool
I	Not required	J-35616-42 (RD)	No Tool Required

E18L Rear Defogger Grid - Left X1

Pin	Size	Color	Circuit	Function	Terminal Type ID	Option
1	—	—	—	Not Occupied	—	—
A	5	PU	293	Rear Defogger Grid Control	I	—

E18L Rear Defogger Grid - Left X2

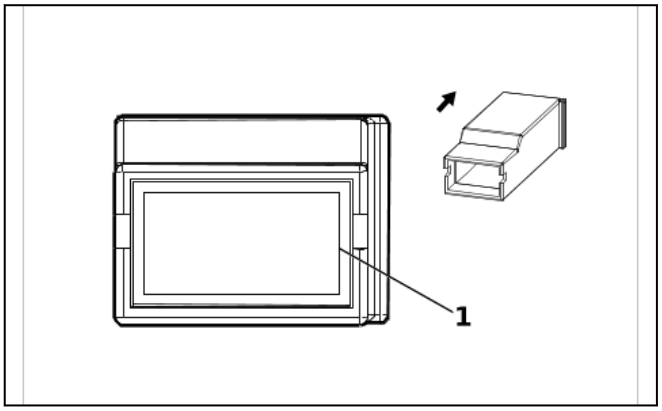

2500421

Connector Part Information
- Harness Type: Rear Window Defogger Wiring Harness
- OEM Connector: 12103107
- Service Connector: Service by Harness - See Part Catalog
- Description: 1-Way F 6.3 Positive Lock Series(BK)

Terminal Part Information

Terminal Type ID	Terminated Lead	Diagnostic Test Probe	Terminal Removal Tool
I	Not required	J-35616-42 (RD)	No Tool Required

E18L Rear Defogger Grid - Left X2

Pin	Size	Color	Circuit	Function	Terminal Type ID	Option
1	—	—	—	Not Occupied	—	—
A	3	BK	850	Ground	I	—

E18R Rear Defogger Grid - Right X1

—

Connector Part Information
- Harness Type: Rear Window Defogger Wiring Harness
- OEM Connector: Not Available
- Service Connector: Service by Harness - See Part Catalog
- Description: 1-Way

Terminal Part Information

Terminal Type ID	Terminated Lead	Diagnostic Test Probe	Terminal Removal Tool
I	Not required	No Tool Required	No Tool Required

E18R Rear Defogger Grid - Right X1

Pin	Size	Color	Circuit	Function	Terminal Type ID	Option
(1) 1	(1) —	(1) PU	(1) 293	(1) Rear Defogger Grid Control	(1) I	(1) —

E18R Rear Defogger Grid - Right X2

—

Connector Part Information
- Harness Type: Rear Window Defogger Wiring Harness
- OEM Connector: Not Available
- Service Connector: Service by Harness - See Part Catalog
- Description: 1-Way

Terminal Part Information

Terminal Type ID	Terminated Lead	Diagnostic Test Probe	Terminal Removal Tool
I	Not required	No Tool Required	No Tool Required

E18R Rear Defogger Grid - Right X2

Pin	Size	Color	Circuit	Function	Terminal Type ID	Option
(1) 1	(1) —	(1) BK	(1) 1050	(1) Ground	(1) I	(1) —

E36AC Dome Lamp - Left Roof Rail

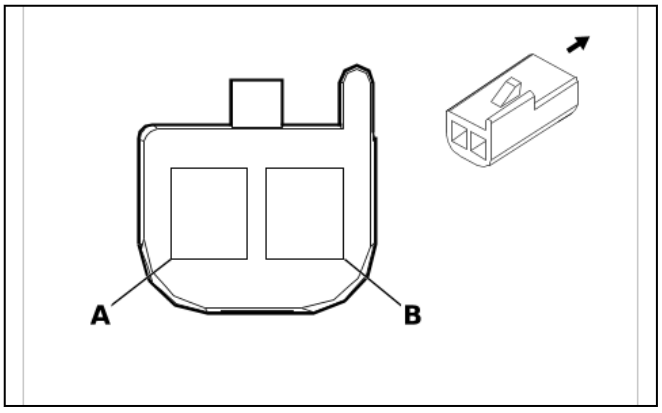

82383

Connector Part Information
- Harness Type: Body Wiring Harness
- OEM Connector: 12047662
- Service Connector: 12085535
- Description: 2-Way F 150 Metri-Pack Series(BK)

Terminal Part Information

Terminal Type ID	Terminated Lead	Diagnostic Test Probe	Terminal Removal Tool
I	Not required	J-35616-14 (GN)	No Tool Required

E36AC Dome Lamp - Left Roof Rail

Pin	Size	Color	Circuit	Function	Terminal Type ID	Option
A	0.75	BU / WH	149	Courtesy Lamp Control	I	—
B	0.75	BK	850	Ground	I	—

E36AD Dome Lamp - Right Roof Rail

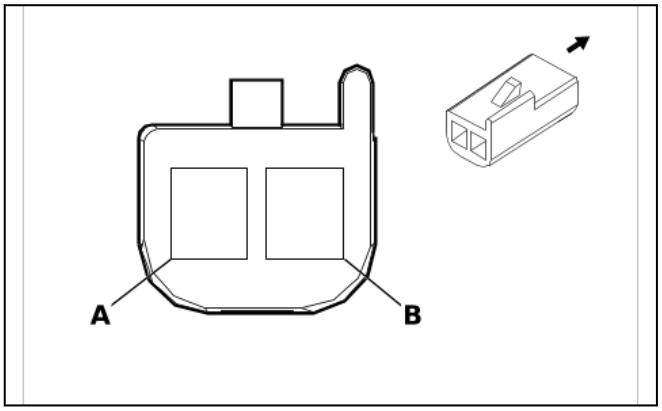

82383

Connector Part Information

- Harness Type: Body Wiring Harness
- OEM Connector: 12047662
- Service Connector: 12085535
- Description: 2-Way F 150 Metri-Pack Series(BK)

Terminal Part Information

Terminal Type ID	Terminated Lead	Diagnostic Test Probe	Terminal Removal Tool
I	Not required	J-35616-14 (GN)	No Tool Required

E36AD Dome Lamp - Right Roof Rail

Pin	Size	Color	Circuit	Function	Terminal Type ID	Option
A	0.75	BU / WH	149	Courtesy Lamp Control	I	—
B	0.75	BK	850	Ground	I	—

E36AH Dome Lamp

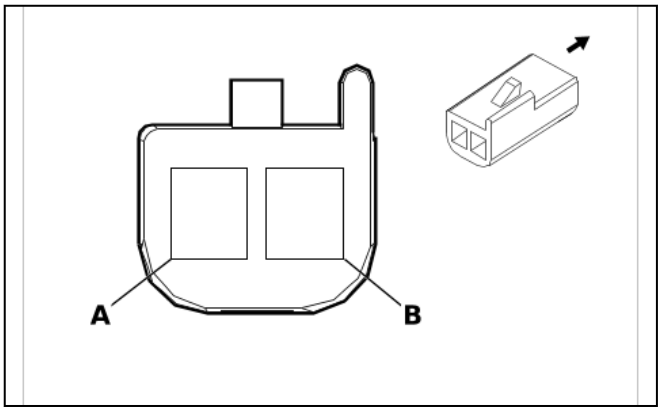

82383

Connector Part Information
- Harness Type: Body Wiring Harness
- OEM Connector: 12047662
- Service Connector: 12085535
- Description: 2-Way F 150 Metri-Pack Series(BK)

Terminal Part Information

Terminal Type ID	Terminated Lead	Diagnostic Test Probe	Terminal Removal Tool
I	Not required	J-35616-14 (GN)	No Tool Required

E36AH Dome Lamp

Pin	Size	Color	Circuit	Function	Terminal Type ID	Option
A	0.75	BU / WH	149	Courtesy Lamp Control	I	—
B	0.75	BK	850	Ground	I	—

E37F Dome/Reading Lamps - Front

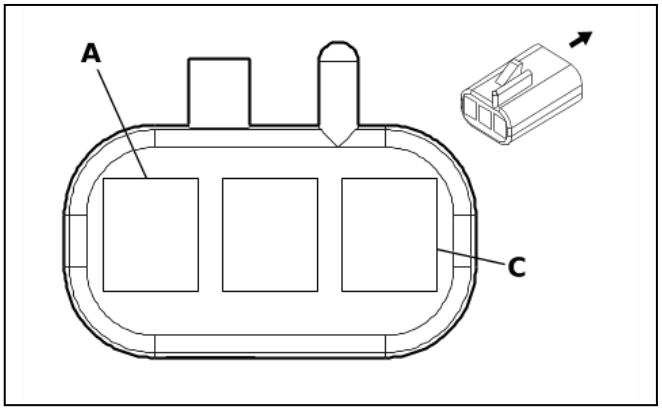

333035

Connector Part Information
- Harness Type: Roof Console Wiring Harness
- OEM Connector: 12047781
- Service Connector: 13586139
- Description: 3-Way F 150 Metri-Pack Series(BK)

Terminal Part Information

Terminal Type ID	Terminated Lead	Diagnostic Test Probe	Terminal Removal Tool
I	Not required	J-35616-14 (GN)	No Tool Required

E37F Dome/Reading Lamps - Front

Pin	Size	Color	Circuit	Function	Terminal Type ID	Option
A	0.5	BU / WH	149	Courtesy Lamp Control	I	—
B	0.75 1	BK BK	1850 1850	Ground Ground	I I	- DH6 DH6
C	0.75	OG	1732	Control Module 12V Reference 3	I	—

E37M Dome/Reading Lamps - Middle

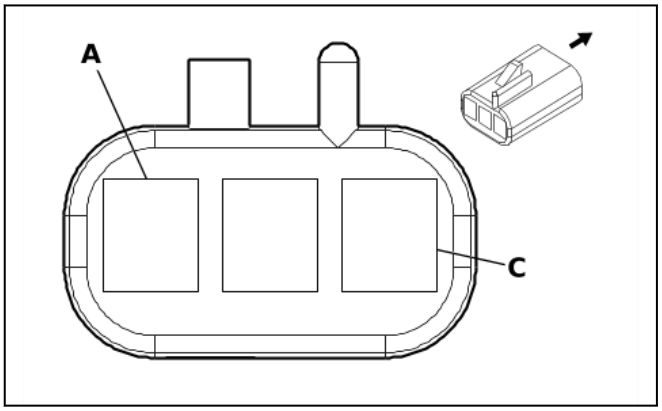

333035

Connector Part Information

- Harness Type: Roof Console Wiring Harness - Rear Extension
- OEM Connector: 12047781
- Service Connector: 13586139
- Description: 3-Way F 150 Metri-Pack Series(BK)

Terminal Part Information

Terminal Type ID	Terminated Lead	Diagnostic Test Probe	Terminal Removal Tool
I	Not required	J-35616-14 (GN)	No Tool Required

E37M Dome/Reading Lamps - Middle

Pin	Size	Color	Circuit	Function	Terminal Type ID	Option
A	0.75	BU / WH	149	Courtesy Lamp Control	I	—
B	0.5	BK	1050	Ground	I	—
C	0.75	OG	1732	Control Module 12V Reference 3	I	—

E37R Dome/Reading Lamps - Rear

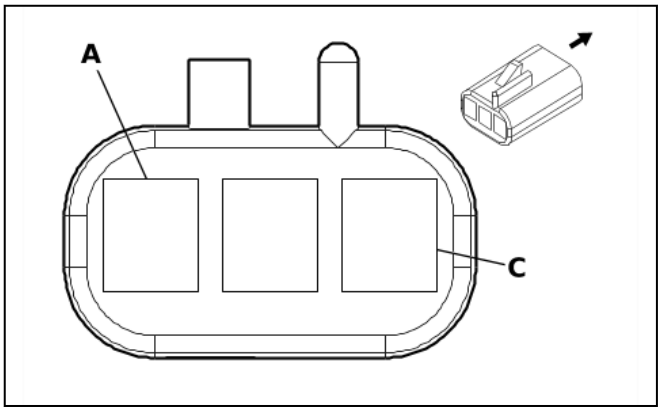

333035

Connector Part Information
- Harness Type: Roof Console Wiring Harness - Rear Extension
- OEM Connector: 12047781
- Service Connector: 13586139
- Description: 3-Way F 150 Metri-Pack Series(BK)

Terminal Part Information

Terminal Type ID	Terminated Lead	Diagnostic Test Probe	Terminal Removal Tool
I	Not required	J-35616-14 (GN)	No Tool Required

E37R Dome/Reading Lamps - Rear

Pin	Size	Color	Circuit	Function	Terminal Type ID	Option
A	0.75	BU / WH	149	Courtesy Lamp Control	I	—
B	0.5	BK	1050	Ground	I	—
C	0.75	OG	1732	Control Module 12V Reference 3	I	—

F101 Passenger Instrument Panel Air Bag

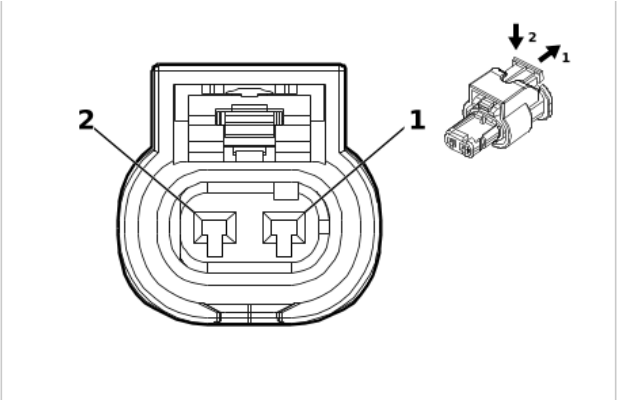

2698576

Connector Part Information
- Harness Type: Instrument Panel Wiring Harness
- OEM Connector: 13863037
- Service Connector: 19369032
- Description: 2-Way F 1.2 MCON Series, Sealed(YE)

Terminal Part Information

Terminal Type ID	Terminated Lead	Diagnostic Test Probe	Terminal Removal Tool
I	Not required	J-35616-12 (BU)	No Tool Required

F101 Passenger Instrument Panel Air Bag

Pin	Size	Color	Circuit	Function	Terminal Type ID	Option
(1) 1	(1) 0.5	(1) YE	(1) 3025	(1) Passenger Instrument Panel Air Bag Stage 1 High Control	(1) I	(1) —
(2) 2	(2) 0.5	(2) OG	(2) 3024	(2) Passenger Instrument Panel Air Bag Stage 1 Low Control	(2) I	(2) —

F105LF Roof Rail Air Bag - Left Front

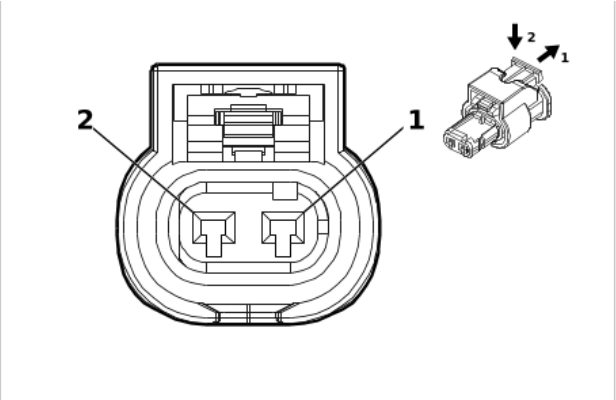

2698576

Connector Part Information

- Harness Type: Body Wiring Harness
- OEM Connector: 13863037
- Service Connector: 19369032
- Description: 2-Way F 1.2 MCON Series, Sealed(YE)

Terminal Part Information

Terminal Type ID	Terminated Lead	Diagnostic Test Probe	Terminal Removal Tool
I	Not required	J-35616-12 (BU)	No Tool Required

F105LF Roof Rail Air Bag - Left Front

Pin	Size	Color	Circuit	Function	Terminal Type ID	Option
(1) 1	(1) 0.5	(1) PK	(1) 5020	(1) Left Front Roof Rail Air Bag Low Control	(1) I	(1) —
(2) 2	(2) 0.5	(2) PU / WH	(2) 5019	(2) Left Front Roof Rail Air Bag High Control	(2) I	(2) —

F105RF Roof Rail Air Bag - Right Front

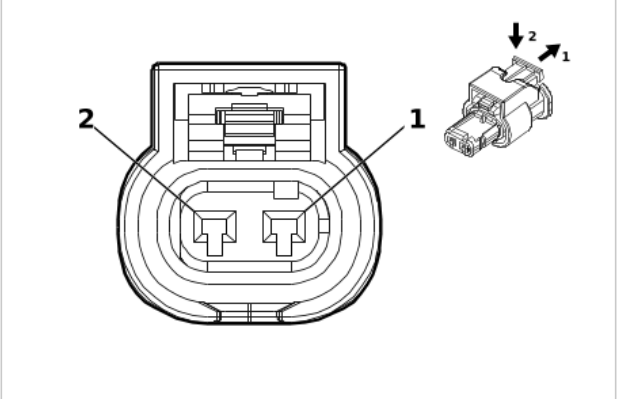

2698576

Connector Part Information
- Harness Type: Body Wiring Harness
- OEM Connector: 13863037
- Service Connector: 19369032
- Description: 2-Way F 1.2 MCON Series, Sealed(YE)

Terminal Part Information

Terminal Type ID	Terminated Lead	Diagnostic Test Probe	Terminal Removal Tool
I	Not required	J-35616-12 (BU)	No Tool Required

F105RF Roof Rail Air Bag - Right Front

Pin	Size	Color	Circuit	Function	Terminal Type ID	Option
(1) 1	(1) 0.5	(1) WH / BK	(1) 5022	(1) Right Front Roof Rail Air Bag Low Control	(1) I	(1) —
(2) 2	(2) 0.5	(2) YE / BK	(2) 5021	(2) Right Front Roof Rail Air Bag High Control	(2) I	(2) —

F105RR Roof Rail Air Bag - Right Rear

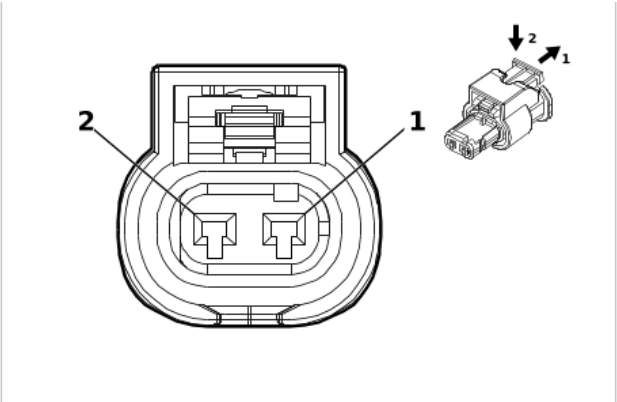

2698576

Connector Part Information
- Harness Type: Body Wiring Harness
- OEM Connector: 13863037
- Service Connector: 19369032
- Description: 2-Way F 1.2 MCON Series, Sealed(YE)

Terminal Part Information

Terminal Type ID	Terminated Lead	Diagnostic Test Probe	Terminal Removal Tool
I	Not required	J-35616-12 (BU)	No Tool Required

F105RR Roof Rail Air Bag - Right Rear

Pin	Size	Color	Circuit	Function	Terminal Type ID	Option
(1) 1	(1) 0.5	(1) TN / BK	(1) 7016	(1) Right Rear Roof Rail Air Bag Low Control	(1) I	(1) —
(2) 2	(2) 0.5	(2) BU	(2) 7015	(2) Right Rear Roof Rail Air Bag High Control	(2) I	(2) —

F106D Seat Side Air Bag - Driver

—

Connector Part Information
- Harness Type: Rear Window Defogger Wiring Harness
- OEM Connector: Not Available
- Service Connector: Service by Harness - See Part Catalog
- Description: 2-Way

Terminal Part Information

Terminal Type ID	Terminated Lead	Diagnostic Test Probe	Terminal Removal Tool
I	Not required	No Tool Required	No Tool Required

F106D Seat Side Air Bag - Driver

Pin	Size	Color	Circuit	Function	Terminal Type ID	Option
(1) 1	(1) —	(1) BN	(1) 2137	(1) Left Front Seat Side Air Bag High Control	(1) I	(1) —
(2) 2	(2) —	(2) YE / BK	(2) 2138	(2) Left Front Seat Side Air Bag Low Control	(2) I	(2) —

F106P Seat Side Air Bag - Passenger

—

Connector Part Information
- Harness Type: Rear Window Defogger Wiring Harness
- OEM Connector: Not Available
- Service Connector: Service by Harness - See Part Catalog
- Description: 2-Way

Terminal Part Information

Terminal Type ID	Terminated Lead	Diagnostic Test Probe	Terminal Removal Tool
I	Not required	No Tool Required	No Tool Required

F106P Seat Side Air Bag - Passenger

Pin	Size	Color	Circuit	Function	Terminal Type ID	Option
(1) 1	(1) —	(1) TN / WH	(1) 2135	(1) Right Front Seat Side Air Bag High Control	(1) I	(1) —
(2) 2	(2) —	(2) GN	(2) 2136	(2) Right Front Seat Side Air Bag Low Control	(2) I	(2) —

F107 Steering Wheel Air Bag

—

Connector Part Information
- Harness Type: Rear Window Defogger Wiring Harness
- OEM Connector: Not Available
- Service Connector: Service by Harness - See Part Catalog
- Description: 2-Way

Terminal Part Information

Terminal Type ID	Terminated Lead	Diagnostic Test Probe	Terminal Removal Tool
I	Not required	No Tool Required	No Tool Required

F107 Steering Wheel Air Bag

Pin	Size	Color	Circuit	Function	Terminal Type ID	Option
(1) 1	(1) —	(1) TN	(1) 3021	(1) Steering Wheel Air Bag Stage 1 High Control	(1) I	(1) —
(2) 2	(2) —	(2) BN	(2) 3020	(2) Steering Wheel Air Bag Stage 1 Low Control	(2) I	(2) —

F109D Seat Belt Buckle Pretensioner - Driver

—

Connector Part Information
- Harness Type: Rear Window Defogger Wiring Harness
- OEM Connector: Not Available
- Service Connector: Service by Harness - See Part Catalog
- Description: 2-Way

Terminal Part Information

Terminal Type ID	Terminated Lead	Diagnostic Test Probe	Terminal Removal Tool
I	Not required	No Tool Required	No Tool Required

F109D Seat Belt Buckle Pretensioner - Driver

Pin	Size	Color	Circuit	Function	Terminal Type ID	Option
(1) 1	(1) —	(1) TN / WH	(1) 2118	(1) Driver Seat Belt Pretensioner High Control	(1) I	(1) —
(2) 2	(2) —	(2) OG / BK	(2) 2119	(2) Driver Seat Belt Pretensioner Low Control	(2) I	(2) —

F109P Seat Belt Buckle Pretensioner - Passenger

—

Connector Part Information
- Harness Type: Rear Window Defogger Wiring Harness
- OEM Connector: Not Available
- Service Connector: Service by Harness - See Part Catalog
- Description: 2-Way

Terminal Part Information

Terminal Type ID	Terminated Lead	Diagnostic Test Probe	Terminal Removal Tool
I	Not required	No Tool Required	No Tool Required

F109P Seat Belt Buckle Pretensioner - Passenger

Pin	Size	Color	Circuit	Function	Terminal Type ID	Option
(1) 1	(1) —	(1) GN	(1) 2116	(1) Passenger Seat Belt Pretensioner High Control	(1) I	(1) —
(2) 2	(2) —	(2) OG	(2) 2117	(2) Passenger Seat Belt Pretensioner Low Control	(2) I	(2) —

G13 Generator X1

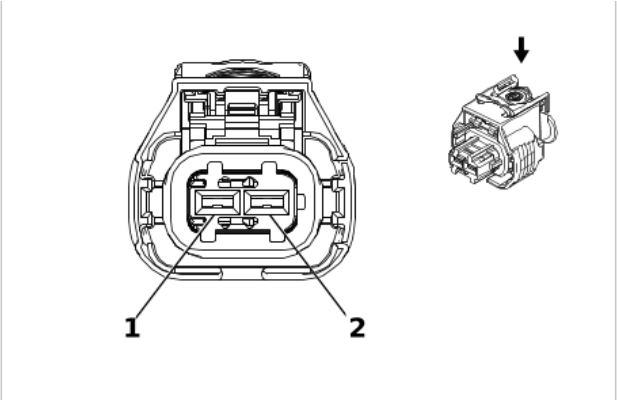

2577394

Connector Part Information

- Harness Type: Engine Wiring Harness
- OEM Connector: 1 928 405 714
- Service Connector: 13384371
- Description: 2-Way F 2.8 Series, Sealed(BK)

Terminal Part Information

Terminal Type ID	Terminated Lead	Diagnostic Test Probe	Terminal Removal Tool
I	Not required	J-35616-35 (VT)	No Tool Required

G13 Generator X1

Pin	Size	Color	Circuit	Function	Terminal Type ID	Option
(1) 1	(1) 0.5	(1) BN	(1) 25	(1) Charge Indicator Control	(1) I	(1) —
(2) 2	(2) 0.5	(2) GY	(2) 23	(2) Generator Field Duty Cycle Signal	(2) I	(2) —

G13 Generator X2 (K68)

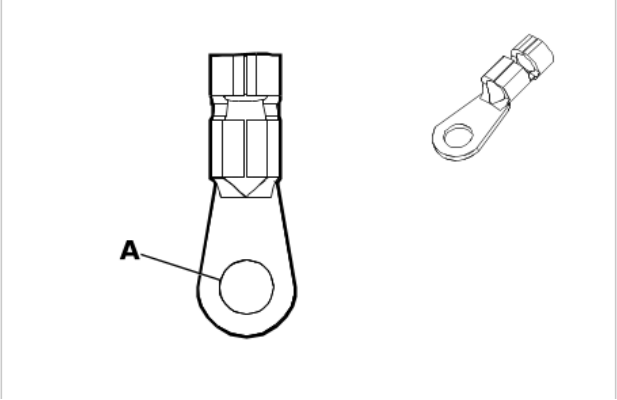

2268698

Connector Part Information
- Harness Type: Battery Positive Cable
- OEM Connector: 12129598
- Service Connector: Service by Cable Assembly — See Part Catalog
- Description: 1-Way Ring Terminal

Terminal Part Information

Terminal Type ID	Terminated Lead	Diagnostic Test Probe	Terminal Removal Tool
I	Not required	No Tool Required	No Tool Required

G13 Generator X2 (K68)

Pin	Size	Color	Circuit	Function	Terminal Type ID	Option
A	19	RD	1	Unfused Battery Positive Voltage	I	—

G13 Generator X2 (KG4)

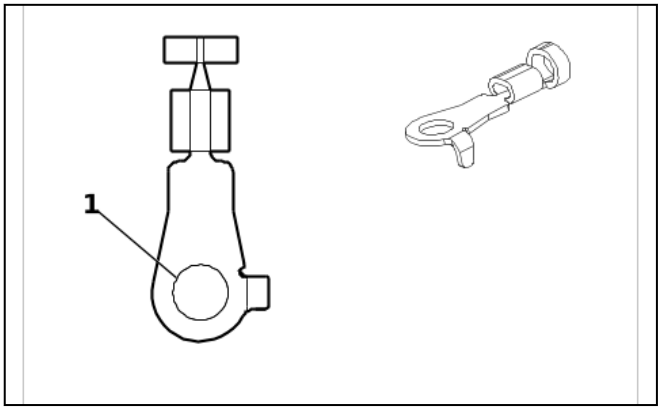

4833656

Connector Part Information
- Harness Type: Battery Positive Cable
- OEM Connector: 15544794
- Service Connector: Service by Cable Assembly — See Part Catalog
- Description: 1-Way Ring Terminal

Terminal Part Information

Terminal Type ID	Terminated Lead	Diagnostic Test Probe	Terminal Removal Tool
I	Not required	No Tool Required	No Tool Required

G13 Generator X2 (KG4)

Pin	Size	Color	Circuit	Function	Terminal Type ID	Option
(1) 1	(1) 25	(1) RD	(1) 1	(1) Unfused Battery Positive Voltage	(1) I	(1) —

G13 Generator X2 (KW5)

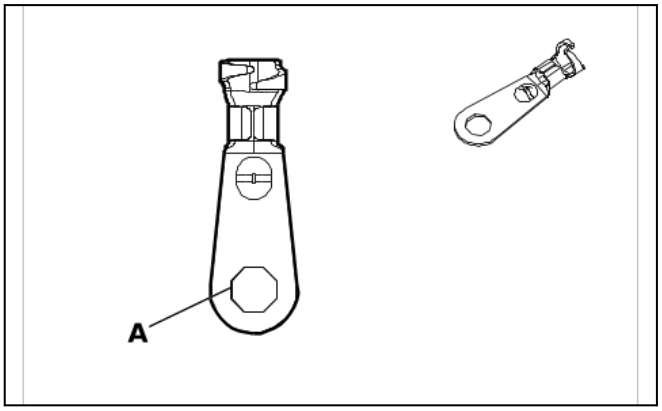

3214043

Connector Part Information

- Harness Type: Battery Positive Cable
- OEM Connector: 33257772
- Service Connector: Service by Cable Assembly — See Part Catalog
- Description: 1-Way Ring Terminal

Terminal Part Information

Terminal Type ID	Terminated Lead	Diagnostic Test Probe	Terminal Removal Tool
I	Not required	No Tool Required	No Tool Required

G13 Generator X2 (KW5)

Pin	Size	Color	Circuit	Function	Terminal Type ID	Option
A	25	RD	1	Unfused Battery Positive Voltage	I	—

G18 High Pressure Fuel Pump (L8T)

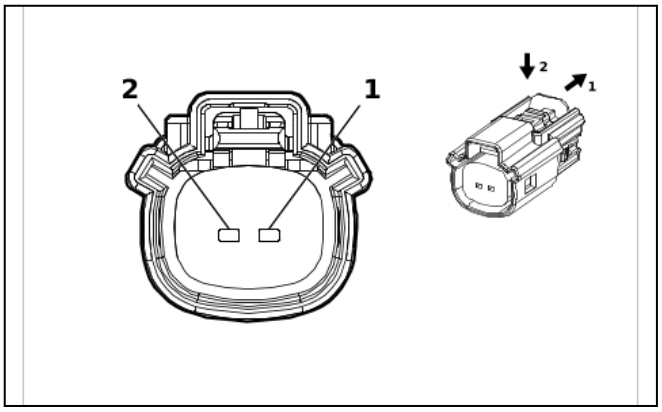

2474713

Connector Part Information
- Harness Type: Fuel Injector Wiring Harness - Right
- OEM Connector: 33471-0206
- Service Connector: Service by Harness - See Part Catalog
- Description: 2-Way F 1.5 Series, Sealed(BK)

Terminal Part Information

Terminal Type ID	Terminated Lead	Diagnostic Test Probe	Terminal Removal Tool
I	Not required	J-35616-14 (GN)	No Tool Required

G18 High Pressure Fuel Pump (L8T)

Pin	Size	Color	Circuit	Function	Terminal Type ID	Option
(1) 1	(1) 0.75	(1) VT / BK	(1) 7300	(1) High Pressure Fuel Pump Low Control	(1) I	(1) —
(2) 2	(2) 0.75	(2) YE	(2) 7301	(2) High Pressure Fuel Pump High Control	(2) I	(2) —

G18 High Pressure Fuel Pump (LV1)

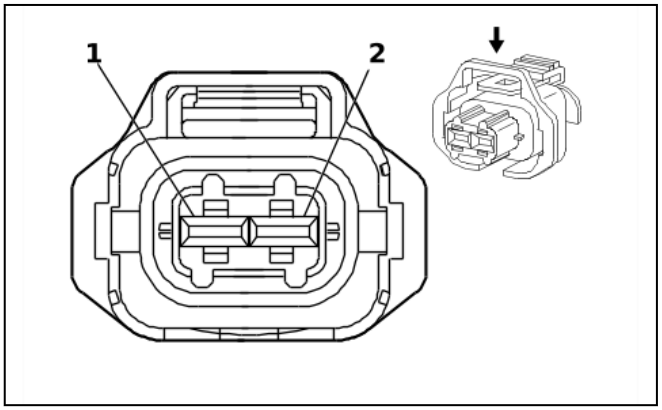

784092

Connector Part Information
- Harness Type: Fuel Injector Wiring Harness - Right
- OEM Connector: 33471-0206
- Service Connector: Service by Harness - See Part Catalog
- Description: 2-Way F 1.5 Series, Sealed(BK)

Terminal Part Information

Terminal Type ID	Terminated Lead	Diagnostic Test Probe	Terminal Removal Tool
I	Not required	J-35616-14 (GN)	No Tool Required

G18 High Pressure Fuel Pump (LV1)

Pin	Size	Color	Circuit	Function	Terminal Type ID	Option
(1) 1	(1) 0.75	(1) YE	(1) 7301	(1) High Pressure Fuel Pump High Control	(1) I	(1) —
(2) 2	(2) 0.75	(2) VT / BK	(2) 7300	(2) High Pressure Fuel Pump Low Control	(2) I	(2) —

G24 Windshield Washer Pump

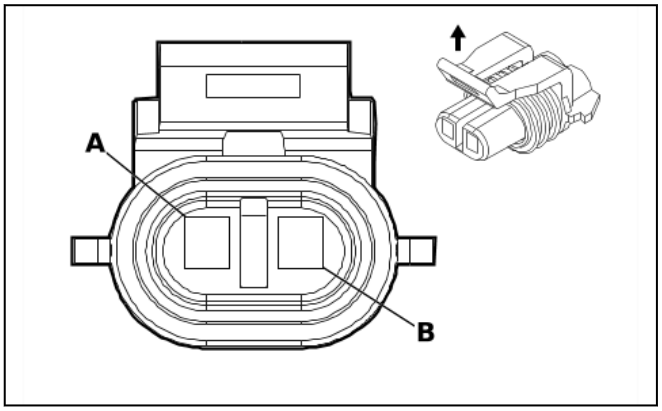

635009

Connector Part Information

- Harness Type: Instrument Panel Wiring Harness
- OEM Connector: 12052641
- Service Connector: 13586114
- Description: 2-Way F 150 Metri-Pack Series, Sealed(BK)

Terminal Part Information

Terminal Type ID	Terminated Lead	Diagnostic Test Probe	Terminal Removal Tool
I	Not required	J-35616-14 (GN)	No Tool Required

G24 Windshield Washer Pump

Pin	Size	Color	Circuit	Function	Terminal Type ID	Option
A	0.5	OG	228	Windshield Washer Pump Control	I	—
B	0.5	BK	350	Ground	I	—

K9 Body Control Module X1

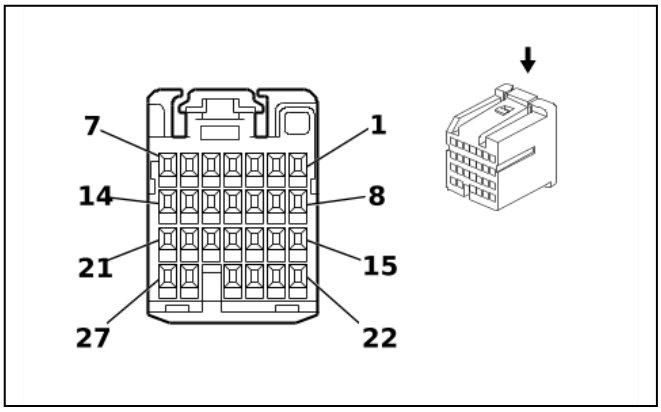

1664495

Connector Part Information

- Harness Type: Instrument Panel Wiring Harness
- OEM Connector: HITPB-27-A-LM
- Service Connector: 88988838
- Description: 27-Way F HIT Series(L-GN)

Terminal Part Information

Terminal Type ID	Terminated Lead	Diagnostic Test Probe	Terminal Removal Tool
I	13575870	J-35616-64B (L-BU)	J-38125-12A

K9 Body Control Module X1

Pin	Size	Color	Circuit	Function	Terminal Type ID	Option
1	—	—	—	Not Occupied	—	—
(2) 2	(2) 0.35	(2) PK	(2) 1020	(2) Off/Run/Crank Ignition Voltage	(2) I	(2) —
(3) 3	(3) 0.35	(3) GY	(3) 1884	(3) Cruise Control Set/Coast/Resume/Accelerate Switch Signal	(3) I	(3) —
(4) 4	(4) 0.35	(4) WH	(4) 530	(4) Off/Run/Crank Ignition Voltage	(4) I	(4) —
(5) 5	(5) 0.35	(5) GN	(5) 1715	(5) Windshield Wiper Switch High Signal	(5) I	(5) —
(6) 6	(6) 0.35	(6) GN	(6) 6818	(6) Steering Wheel Controls Signal 1	(6) I	(6) —
7	—	—	—	Not Occupied	—	—
(8) 8	(8) 0.35	(8) TN / BK	(8) 6009	(8) Windshield Wiper Switch Low Reference	(8) I	(8) —
(9) 9	(9) 0.35	(9) BU	(9) 1714	(9) Windshield Wiper Switch Low Signal	(9) I	(9) —
10 - 13	—	—	—	Not Occupied	—	—
(14) 14	(14) 0.35	(14) PK	(14) 3	(14) Run/Crank Ignition 1 Voltage	(14) I	(14) —
(15) 15	(15) 0.35	(15) GN	(15) 663	(15) Hazard Switch Left Turn Signal	(15) I	(15) —
(16) 16	(16) 0.35	(16) TN	(16) 664	(16) Hazard Switch Right Turn Signal	(16) I	(16) —
(17) 17	(17) 0.35	(17) PK	(17) 1444	(17) 12V Reference	(17) I	(17) —
(18) 18	(18) 0.35	(18) YE	(18) 525	(18) High Beam Select Switch Low Beam Signal	(18) I	(18) —
(19) 19	(19) 0.35	(19) WH	(19) 111	(19) Hazard Warning Switch Signal	(19) I	(19) —

Pin	Size	Color	Circuit	Function	Terminal Type ID	Option
(20) 20	(20) 0.35	(20) PU	(20) 5526	(20) Tap Up/Tap Down Switch Signal	(20) I	(20) —
(21) 21	(21) 0.35	(21) BN	(21) 4	(21) Accessory Ignition Voltage	(21) I	(21) —
22	—	—	—	Not Occupied	—	—
(23) 23	(23) 0.35	(23) BU	(23) 1788	(23) Traction Control Switch Signal 1	(23) I	(23) —
(24) 24	(24) 0.35	(24) PK	(24) 94	(24) Windshield Washer Switch Signal	(24) I	(24) —
(25) 25	(25) 0.35	(25) YE	(25) 307	(25) Headlamp Switch Flash Signal	(25) I	(25) —
(26) 26	(26) 0.5	(26) TN / WH	(26) 816	(26) Brake Transmission Shift Interlock Solenoid Actuator Control	(26) I	(26) —
27	—	—	—	Not Occupied	—	—

K9 Body Control Module X2

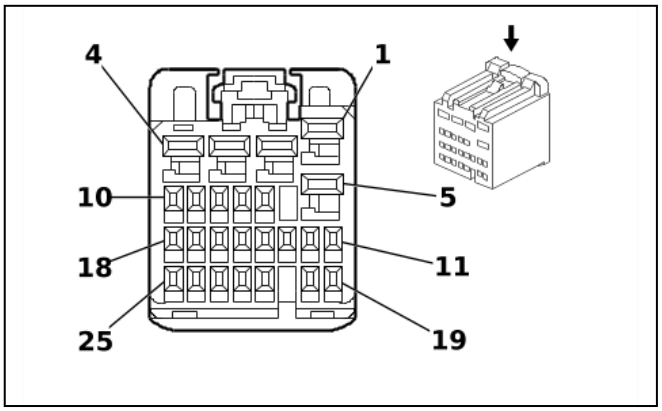

1664496

Connector Part Information

- Harness Type: Instrument Panel Wiring Harness
- OEM Connector: HITPB-25-B-S
- Service Connector: 88988839
- Description: 25-Way F HIT Series(NA)

Terminal Part Information

Terminal Type ID	Terminated Lead	Diagnostic Test Probe	Terminal Removal Tool
I	13575870	J-35616-64B (L-BU)	J-38125-12A
II	13575871	J-35616-35 (VT)	J-38125-12A

K9 Body Control Module X2

Pin	Size	Color	Circuit	Function	Terminal Type ID	Option
(1) 1	(1) 0.75	(1) OG	(1) 1732	(1) Control Module 12V Reference 3	(1) II	(1) —
(2) 2	(2) 0.5	(2) RD / WH	(2) 2540	(2) Battery Positive Voltage	(2) II	(2) —
(3) 3	(3) 0.5	(3) BN / WH	(3) 230	(3) Instrument Panel Lamp Dimming Control	(3) II	(3) —

Pin	Size	Color	Circuit	Function	Terminal Type ID	Option
4	—	—	—	Not Occupied	—	—
(5) 5	(5) 0.75	(5) BU / WH	(5) 149	(5) Courtesy Lamp Control	(5) II	(5) —
6 - 7	—	—	—	Not Occupied	—	—
(8) 8	(8) 0.35	(8) BU	(8) 13	(8) Headlamp Switch Park Lamp Signal	(8) I	(8) —
9 - 10	—	—	—	Not Occupied	—	—
(11) 11	(11) 0.35	(11) WH	(11) 278	(11) Ambient Light Sensor Signal	(11) I	(11) —
(12) 12	(12) 0.35	(12) WH	(12) 103	(12) Headlamp Switch On Signal	(12) I	(12) —
13 - 16	—	—	—	Not Occupied	—	—
(17) 17	(17) 0.35	(17) GN	(17) 306	(17) Headlamp Switch Off Signal	(17) I	(17) —
(18) 18	(18) 0.35	(18) BU / WH	(18) 149	(18) Courtesy Lamp Control	(18) I	(18) —
19 - 20	—	—	—	Not Occupied	—	—
(21) 21	(21) 0.5	(21) BU	(21) 6727	(21) Vehicle Stability Control Switch Signal	(21) I	(21) —
(22) 22	(22) 0.35	(22) BU	(22) 38	(22) Backup Lamp Relay Control	(22) I	(22) —
23 - 24	—	—	—	Not Occupied	—	—
(25) 25	(25) 0.35	(25) PU	(25) 328	(25) Interior Lamp Defeat Switch Signal	(25) I	(25) —

K9 Body Control Module X3

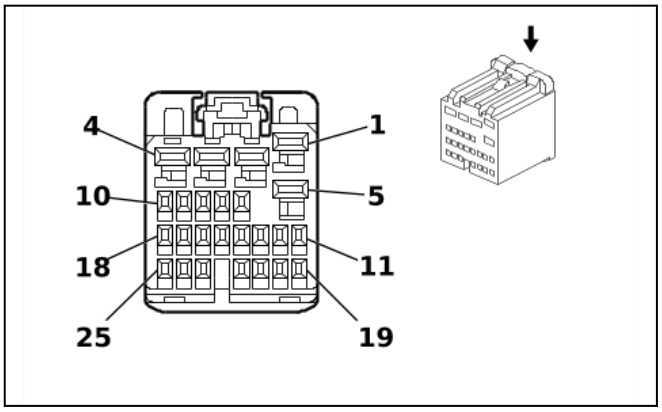

1664498

Connector Part Information

- Harness Type: Instrument Panel Wiring Harness
- OEM Connector: HITPB-25-C-LE
- Service Connector: 88988840
- Description: 25-Way F HIT Series(L-BU)

Terminal Part Information

Terminal Type ID	Terminated Lead	Diagnostic Test Probe	Terminal Removal Tool
I	13575870	J-35616-64B (L-BU)	J-38125-12A
II	13575871	J-35616-35 (VT)	J-38125-12A
III	13587507	J-35616-35 (VT)	J-38125-12A

K9 Body Control Module X3

Pin	Size	Color	Circuit	Function	Terminal Type ID	Option
(1) 1	(1) 0.75	(1) BK / WH	(1) 351	(1) Signal Ground	(1) III	(1) —
(2) 2	(2) 0.75	(2) RD / WH	(2) 2140	(2) Battery Positive Voltage	(2) III	(2) —
(3) 3	(3) 0.5	(3) RD / WH	(3) 3840	(3) Battery Positive Voltage	(3) II	(3) —
4	—	—	—	Not Occupied	—	—
(5) 5	(5) 0.75	(5) BK / WH	(5) 351	(5) Signal Ground	(5) III	(5) —
6 - 7	—	—	—	Not Occupied	—	—
(8) 8	(8) 0.5	(8) BU	(8) 2500	(8) High Speed GMLAN Serial Data [+] 1	(8) I	(8) —
(9) 9	(9) 0.5	(9) WH	(9) 2501	(9) High Speed GMLAN Serial Data [-] 1	(9) I	(9) —
(10) 10	(10) 0.35	(10) GN	(10) 5060	(10) Low Speed GMLAN Serial Data	(10) I	(10) —
(11) 11	(11) 0.35	(11) GN	(11) 44	(11) Instrument Panel Lamp Dimmer Switch Signal	(11) I	(11) —
(12) 12	(12) 0.35	(12) OG / WH	(12) 812	(12) 12V Reference	(12) I	(12) —
(13) 13	(13) 0.5	(13) TN	(13) 5380	(13) Brake Position Sensor Signal	(13) I	(13) —
(14) 14	(14) 0.5	(14) BN / WH	(14) 5382	(14) Brake Position Sensor Low Reference	(14) I	(14) —
(15) 15	(15) 0.5	(15) GY	(15) 5381	(15) Brake Position Sensor 5V Reference	(15) I	(15) —
(16) 16	(16) 0.5	(16) BU	(16) 2500	(16) High Speed GMLAN Serial Data [+] 1	(16) I	(16) —
(17) 17	(17) 0.5	(17) WH	(17) 2501	(17) High Speed GMLAN Serial Data [-] 1	(17) I	(17) —
(18) 18	(18) 0.5	(18) YE	(18) 6817	(18) LED Backlight Dimming Control 1	(18) I	(18) —
(19) 19	(19) 0.5	(19) WH / BU	(19) 5986	(19) Serial Data Communication Enable	(19) I	(19) —
20 - 21	—	—	—	Not Occupied	—	—
(22) 22	(22) 0.35	(22) GN / WH	(22) 7158	(22) Cruise Control Indicator Dimming Signal	(22) I	(22) —
23 - 24	—	—	—	Not Occupied	—	—
(25) 25	(25) 0.35	(25) WH	(25) 6816	(25) Indicator Dimming Control	(25) I	(25) —

K9 Body Control Module X4

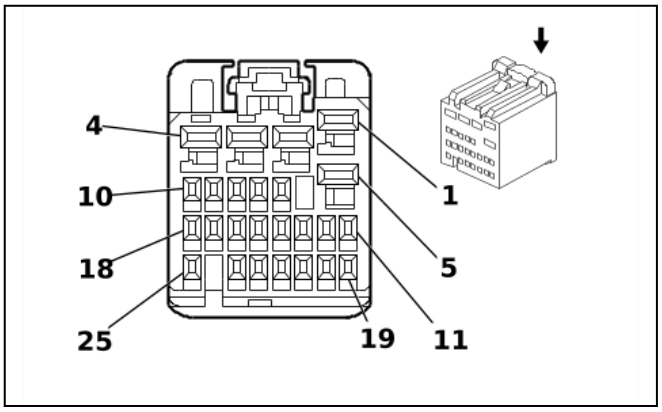

1664499

Connector Part Information

- Harness Type: Instrument Panel Wiring Harness
- OEM Connector: HITPB-25-D-K
- Service Connector: 88988841
- Description: 25-Way F HIT Series(BK)

Terminal Part Information

Terminal Type ID	Terminated Lead	Diagnostic Test Probe	Terminal Removal Tool
I	13575870	J-35616-64B (L-BU)	J-38125-12A
II	13587507	J-35616-35 (VT)	J-38125-12A

K9 Body Control Module X4

Pin	Size	Color	Circuit	Function	Terminal Type ID	Option
(1) 1	(1) 0.75	(1) RD / WH	(1) 2740	(1) Battery Positive Voltage	(1) II	(1) —
(2) 2	(2) 0.75	(2) RD / WH	(2) 3040	(2) Battery Positive Voltage	(2) II	(2) —
(3) 3	(3) 0.75	(3) RD / WH	(3) 2940	(3) Battery Positive Voltage	(3) II	(3) —
(4) 4	(4) 0.75	(4) RD / WH	(4) 2240	(4) Battery Positive Voltage	(4) II	(4) —
(5) 5	(5) 0.75	(5) BU / WH	(5) 1315	(5) Right Front Turn Signal Lamp Control	(5) II	(5) —
(6) 6	(6) 0.35	(6) GN	(6) 6134	(6) Body Control Module LIN Bus 3	(6) I	(6) —
(7) 7	(7) 0.35	(7) YE	(7) 196	(7) Windshield Wiper Motor Park Switch Signal	(7) I	(7) —
8	—	—	—	Not Occupied	—	—
(9) 9	(9) 0.5	(9) BK / WH	(9) 451	(9) Signal Ground	(9) I	(9) —
(10) 10	(10) 0.5	(10) RD / WH	(10) 2840	(10) Battery Positive Voltage	(10) I	(10) —
11	—	—	—	Not Occupied	—	—
(12) 12	(12) 0.35	(12) YE	(12) 5187	(12) Right Trailer Turn Signal Lamp Control	(12) I	(12) —
(13) 13	(13) 0.35	(13) OG	(13) 5186	(13) Left Trailer Turn Signal Lamp Control	(13) I	(13) —
14	—	—	—	Not Occupied	—	—

Pin	Size	Color	Circuit	Function	Terminal Type ID	Option
(15) 15	(15) 0.35	(15) OG	(15) 2268	(15) Windshield Washer Relay Control	(15) I	(15) —
(16) 16	(16) 0.35	(16) TN / WH	(16) 1969	(16) Headlamp High Beam Relay Control	(16) I	(16) —
(17) 17	(17) 0.5	(17) PK / BK	(17) 109	(17) Hood Ajar Switch Signal	(17) I	(17) —
18	—	—	—	Not Occupied	—	—
(19) 19	(19) 0.5	(19) BU	(19) 5985	(19) Accessory Wake-Up Serial Data	(19) I	(19) —
20	—	—	—	Not Occupied	—	—
(21) 21	(21) 0.35	(21) YE	(21) 5199	(21) Run/Crank Relay Coil Control	(21) I	(21) —
22	—	—	—	Not Occupied	—	—
(23) 23	(23) 0.35	(23) PU	(23) 544	(23) DRL Relay Control	(23) I	(23) —
24 - 25	—	—	—	Not Occupied	—	—

K9 Body Control Module X5

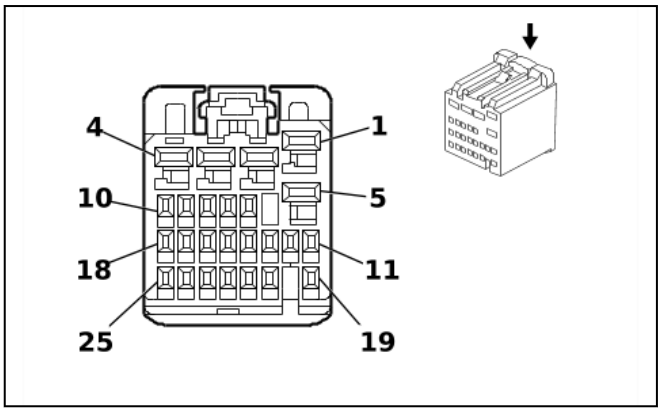

1664500

Connector Part Information

- Harness Type: Instrument Panel Wiring Harness
- OEM Connector: HITPB-25-E-N
- Service Connector: 88988837
- Description: 25-Way F HIT Series(BN)

Terminal Part Information

Terminal Type ID	Terminated Lead	Diagnostic Test Probe	Terminal Removal Tool
I	13575870	J-35616-64B (L-BU)	J-38125-12A
II	13575871	J-35616-35 (VT)	J-38125-12A
III	13582342	J-35616-64B (L-BU)	J-38125-12A
IV	13587507	J-35616-35 (VT)	J-38125-12A

K9 Body Control Module X5

Pin	Size	Color	Circuit	Function	Terminal Type ID	Option
(1) 1	(1) 1	(1) YE	(1) 618	(1) Left Rear Turn Signal Lamp Control	(1) II	(1) —
(2) 2	(2) 1	(2) GN	(2) 619	(2) Right Rear Turn Signal Lamp Control	(2) II	(2) —
3	—	—	—	Not Occupied	—	—
(4) 4	(4) 0.75	(4) BU / WH	(4) 1314	(4) Left Front Turn Signal Lamp Control	(4) IV	(4) —
(5) 5	(5) 0.5	(5) WH	(5) 5065	(5) Stop Lamp Relay Coil Control	(5) II	(5) —
(6) 6	(6) 0.35	(6) WH / BU	(6) 6311	(6) Cruise/ETC/TCC Brake Signal	(6) I	(6) —
7 - 10	—	—	—	Not Occupied	—	—
(11) 11	(11) 0.35	(11) YE	(11) 43	(11) Accessory Ignition Voltage	(11) I	(11) —
12	—	—	—	Not Occupied	—	—
(13) 13	(13) 0.35	(13) OG	(13) 300	(13) Run Ignition 3 Voltage	(13) I	(13) —
(14) 14	(14) 0.5	(14) GN	(14) 24	(14) Backup Lamp Control	(14) I	(14) —
(15) 15	(15) 0.5	(15) PU	(15) 5531	(15) Hood Closed Switch Signal	(15) I	(15) —
(16) 16	(16) 0.75	(16) BU	(16) 1134	(16) Park Brake Switch Signal	(16) III	(16) —
17	—	—	—	Not Occupied	—	—
(18) 18	(18) 0.35	(18) TN	(18) 28	(18) Horn Relay Control	(18) I	(18) —
19	—	—	—	Not Occupied	—	—
(20) 20	(20) 0.35	(20) GY	(20) 91	(20) Windshield Wiper Motor Relay Coil Control	(20) I	(20) —
(21) 21	(21) 0.35	(21) TN	(21) 860	(21) Windshield Wiper Switch High Signal	(21) I	(21) —
22	—	—	—	Not Occupied	—	—
(23) 23	(23) 0.35	(23) PK / WH	(23) 1970	(23) Headlamp Low Beam Relay Control	(23) I	(23) —
(24) 24	(24) 0.35	(24) BU	(24) 45	(24) Park Lamp Relay Control	(24) I	(24) —
25	—	—	—	Not Occupied	—	—

K9 Body Control Module X6

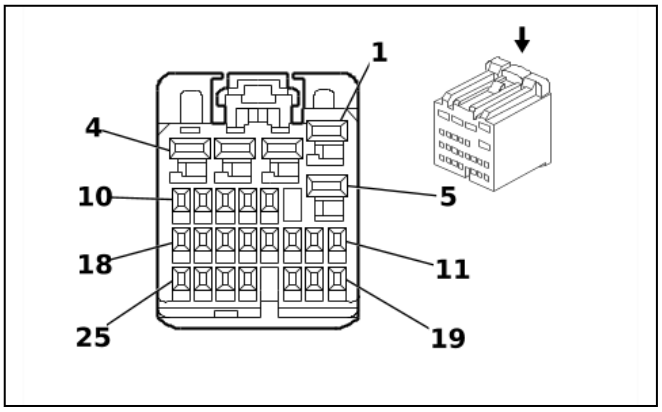

1664502

Connector Part Information

- Harness Type: Instrument Panel Wiring Harness
- OEM Connector: HITPB-25-F-PK
- Service Connector: 88988842
- Description: 25-Way F HIT Series(PK)

Terminal Part Information

Terminal Type ID	Terminated Lead	Diagnostic Test Probe	Terminal Removal Tool
I	13575870	J-35616-64B (L-BU)	J-38125-12A
II	13587507	J-35616-64B (L-BU)	J-38125-12A

K9 Body Control Module X6

Pin	Size	Color	Circuit	Function	Terminal Type ID	Option
1	—	—	—	Not Occupied	—	—
(2) 2	(2) 0.75	(2) BU	(2) 1320	(2) Center High Mounted Stop Lamp Control 2	(2) II	(2) —
3 - 7	—	—	—	Not Occupied	—	—
(8) 8	(8) 0.35	(8) TN / WH	(8) 746	(8) Right Front Door Ajar Switch Signal	(8) I	(8) —
(9) 9	(9) 0.35	(9) BU	(9) 245	(9) Passenger Door Lock Switch Unlock Control	(9) I	(9) —
(10) 10	(10) 0.35	(10) GY / BK	(10) 745	(10) Left Front Door Ajar Switch Signal	(10) I	(10) —
11	—	—	—	Not Occupied	—	—
(12) 12	(12) 0.35	(12) PK / BK	(12) 1303	(12) Liftgate Ajar Switch Signal 1	(12) I	(12) —
13	—	—	—	Not Occupied	—	—
(14) 14	(14) 0.35	(14) YE / BK	(14) 1181	(14) Right Rear Door Open Switch Signal	(14) I	(14) —
15	—	—	—	Not Occupied	—	—
(16) 16	(16) 0.35	(16) GN	(16) 1177	(16) Right Front Door Open Switch Signal	(16) I	(16) —
17	—	—	—	Not Occupied	—	—
(18) 18	(18) 0.35	(18) BU	(18) 244	(18) Passenger Door Lock Switch Lock Control	(18) I	(18) —
19 - 21	—	—	—	Not Occupied	—	—

Pin	Size	Color	Circuit	Function	Terminal Type ID	Option
(22) 22	(22) 0.35	(22) GN	(22) 5926	(22) Rear Body Opening Open Switch Signal	(22) I	(22) —
23 - 25	—	—	—	Not Occupied	—	—

K9 Body Control Module X7

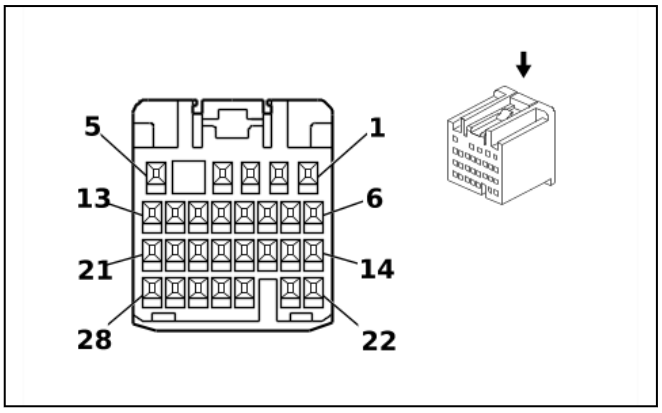

1664505

Connector Part Information

- Harness Type: Instrument Panel Wiring Harness
- OEM Connector: HITPB-28-G-H
- Service Connector: 88988806
- Description: 28-Way F HIT Series(GY)

Terminal Part Information

Terminal Type ID	Terminated Lead	Diagnostic Test Probe	Terminal Removal Tool
I	13575870	J-35616-64B (L-BU)	J-38125-12A

K9 Body Control Module X7

Pin	Size	Color	Circuit	Function	Terminal Type ID	Option
1	—	—	—	Not Occupied	—	—
(2) 2	(2) 0.5	(2) YE	(2) 356	(2) Driver Door Lock Relay Unlock Control	(2) I	(2) —
3 - 5	—	—	—	Not Occupied	—	—
(6) 6	(6) 0.5	(6) YE	(6) 356	(6) Driver Door Lock Relay Unlock Control	(6) I	(6) —
(7) 7	(7) 0.5	(7) BU	(7) 244	(7) Passenger Door Lock Switch Lock Control	(7) I	(7) —
8	—	—	—	Not Occupied	—	—
(9) 9	(9) 0.5	(9) BU	(9) 244	(9) Passenger Door Lock Switch Lock Control	(9) I	(9) —
10	—	—	—	Not Occupied	—	—
(11) 11	(11) 0.5	(11) OG / BK	(11) 781	(11) Driver Door Lock Switch Unlock Signal	(11) I	(11) —
(12) 12	(12) 0.5	(12) PK / BK	(12) 780	(12) Driver Door Lock Switch Lock Signal	(12) I	(12) —
13 - 22	—	—	—	Not Occupied	—	—
(23) 23	(23) 0.5	(23) TN	(23) 126	(23) Left Front Door Open Switch Signal	(23) I	(23) —

Pin	Size	Color	Circuit	Function	Terminal Type ID	Option
(24) 24	(24) 0.5	(24) GN	(24) 66	(24) Air Conditioning Request Signal	(24) I	(24) —
25 - 28	—	—	—	Not Occupied	—	—

K17 Electronic Brake Control Module

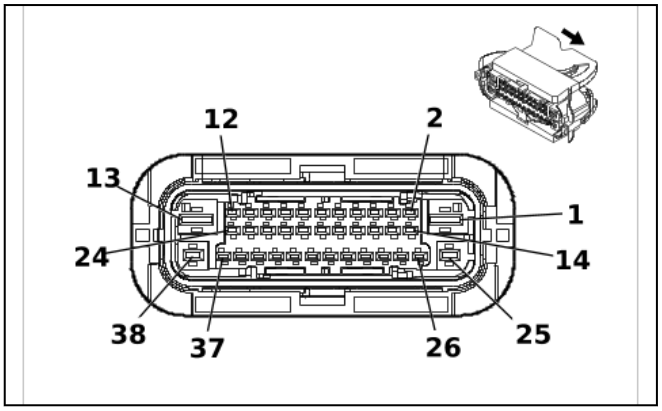

5199340

Connector Part Information

- Harness Type: Chassis Wiring Harness
- OEM Connector: 35497867
- Service Connector: 86825458
- Description: 38-Way F 1.5, 2.8, 4.8 MCP Series, Sealed(BK with BN Inner Connector)

Terminal Part Information

Terminal Type ID	Terminated Lead	Diagnostic Test Probe	Terminal Removal Tool
I	19368624	J-35616-35 (VT)	J-38125-556
II	19369235	J-35616-14 (GN)	EL-38125-560A
III	84616649	J-35616-42 (RD)	J-38125-556

K17 Electronic Brake Control Module

Pin	Size	Color	Circuit	Function	Terminal Type ID	Option
(1) 1	(1) 5	(1) RD / YE	(1) 442	(1) Battery Positive Voltage	(1) III	(1) —
2	—	—	—	Not Occupied	—	—
(3) 3	(3) 0.5	(3) GY / YE	(3) 7128	(3) Right Rear Wheel Speed Sensor Control	(3) II	(3) —
(4) 4	(4) 0.5	(4) VT	(4) 882	(4) Right Rear Wheel Speed Sensor Signal	(4) II	(4) —
(5) 5	(5) 0.5	(5) BU / YE	(5) 6105	(5) High Speed GMLAN Serial Data [+] 2	(5) II	(5) —
(6) 6	(6) 0.5	(6) WH	(6) 6106	(6) High Speed GMLAN Serial Data [-] 2	(6) II	(6) —
7	—	—	—	Not Occupied	—	—
(8) 8	(8) 0.5	(8) WH	(8) 2501	(8) High Speed GMLAN Serial Data [-] 1	(8) II	(8) —
(9) 9	(9) 0.5	(9) BU	(9) 2500	(9) High Speed GMLAN Serial Data [+] 1	(9) II	(9) —
(10) 10	(10) 0.5	(10) GY / BN	(10) 7065	(10) Right Front Wheel Speed Sensor Control	(10) II	(10) —

Pin	Size	Color	Circuit	Function	Terminal Type ID	Option
(11) 11	(11) 0.5	(11) YE	(11) 872	(11) Right Front Wheel Speed Sensor Signal	(11) II	(11) —
12	—	—	—	Not Occupied	—	—
(13) 13	(13) 5	(13) BK	(13) 2150	(13) Ground	(13) III	(13) —
14 - 16	—	—	—	Not Occupied	—	—
(17) 17	(17) 0.5	(17) GN / BN	(17) 2087	(17) Multi-axis Acceleration Sensor Supply Voltage	(17) II	(17) —
18 - 19	—	—	—	Not Occupied	—	—
(20) 20	(20) 0.5	(20) WH	(20) 2501	(20) High Speed GMLAN Serial Data [-] 1	(20) II	(20) —
(21) 21	(21) 0.5	(21) BU	(21) 2500	(21) High Speed GMLAN Serial Data [+] 1	(21) II	(21) —
22 - 24	—	—	—	Not Occupied	—	—
(25) 25	(25) 2.5	(25) RD / VT	(25) 1640	(25) Battery Positive Voltage	(25) I	(25) —
26 - 27	—	—	—	Not Occupied	—	—
(28) 28	(28) 0.5	(28) WH / BU	(28) 5986	(28) Serial Data Communication Enable	(28) II	(28) —
(29) 29	(29) 0.5	(29) GY / BK	(29) 7127	(29) Left Rear Wheel Speed Sensor Control	(29) II	(29) —
(30) 30	(30) 0.5	(30) BU	(30) 884	(30) Left Rear Wheel Speed Sensor Signal	(30) II	(30) —
31 - 34	—	—	—	Not Occupied	—	—
(35) 35	(35) 0.5	(35) GY / WH	(35) 7064	(35) Left Front Wheel Speed Sensor Control	(35) II	(35) —
(36) 36	(36) 0.5	(36) GY	(36) 830	(36) Left Front Wheel Speed Sensor Signal	(36) II	(36) —
37	—	—	—	Not Occupied	—	—
(38) 38	(38) 2.5	(38) BK	(38) 2150	(38) Ground	(38) I	(38) —

K18 Compass Module

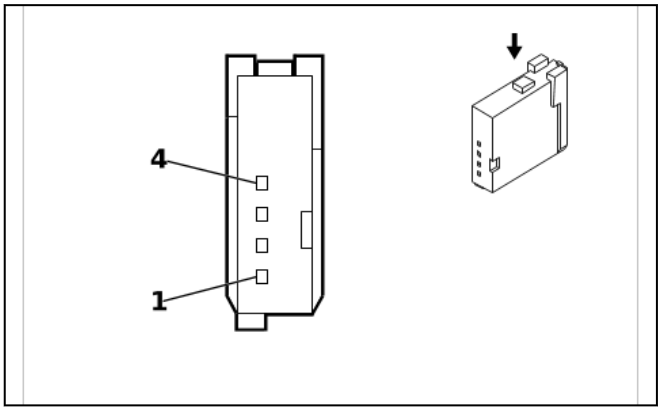

2831061

Connector Part Information

- Harness Type: Roof Console Wiring Harness
- OEM Connector: AIT2PB-04M-1AK
- Service Connector: 19300398
- Description: 4-Way F 0.64 Series(BK)

Terminal Part Information

Terminal Type ID	Terminated Lead	Diagnostic Test Probe	Terminal Removal Tool
I	Not required	J-35616-64B (L-BU)	No Tool Required

K18 Compass Module

Pin	Size	Color	Circuit	Function	Terminal Type ID	Option
(1) 1	(1) 0.35	(1) BN	(1) 441	(1) Run Ignition 3 Voltage	(1) I	(1) —
(2) 2	(2) 0.5	(2) BK / WH	(2) 351	(2) Signal Ground	(2) I	(2) —
(3) 3	(3) 0.35	(3) D-GN	(3) 6134	(3) Body Control Module LIN Bus 3	(3) I	(3) —
4	—	—	—	Not Occupied	—	—

K20 Engine Control Module X1 (L8T)

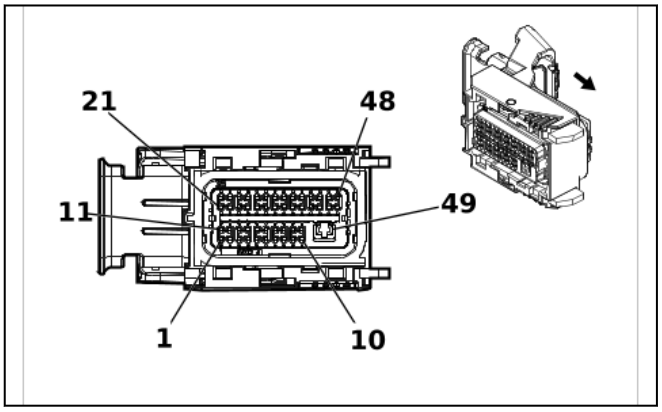

5663663

Connector Part Information

- Harness Type: Engine Wiring Harness
- OEM Connector: 35500079
- Service Connector: 85669159
- Description: 49-Way F 0.64, 2.8 Series, Sealed(BK with BU Terminal Position Assurance)

Terminal Part Information

Terminal Type ID	Terminated Lead	Diagnostic Test Probe	Terminal Removal Tool
I	13587518	J-35616-35 (VT)	J-38125-11A
II	19351723	J-35616-64B (L-BU)	J-38125-213

K20 Engine Control Module X1 (L8T)

Pin	Size	Color	Circuit	Function	Terminal Type ID	Option
(1) 1	(1) 0.5	(1) GN / WH	(1) 492	(1) Mass Air Flow Sensor Signal	(1) II	(1) —
2	—	—	—	Not Occupied	—	—
(3) 3	(3) 0.5	(3) WH	(3) 4499	(3) High Speed GMLAN Serial Data [-] 7	(3) II	(3) —
4 - 5	—	—	—	Not Occupied	—	—
(6) 6	(6) 0.5	(6) WH / BU	(6) 6311	(6) Cruise/ETC/TCC Brake Signal	(6) II	(6) —

Pin	Size	Color	Circuit	Function	Terminal Type ID	Option
(7) 7	(7) 0.5	(7) WH	(7) 2501	(7) High Speed GMLAN Serial Data [-] 1	(7) II	(7) —
(8) 8	(8) 0.5	(8) BN / WH	(8) 419	(8) Check Engine Indicator Control	(8) II	(8) —
(9) 9	(9) 0.5	(9) YE	(9) 5991	(9) Powertrain Relay Coil Control	(9) II	(9) —
10 - 11	—	—	—	Not Occupied	—	—
(12) 12	(12) 0.5	(12) BU / GY	(12) 636	(12) Ambient Air Temperature Sensor Signal	(12) II	(12) —
(13) 13	(13) 0.5	(13) BU / BN	(13) 4498	(13) High Speed GMLAN Serial Data [+] 7	(13) II	(13) —
(14) 14	(14) 0.5	(14) WH / GN	(14) 5380	(14) Brake Position Sensor Signal	(14) II	(14) —
15 - 16	—	—	—	Not Occupied	—	—
(17) 17	(17) 0.5	(17) BU	(17) 2500	(17) High Speed GMLAN Serial Data [+] 1	(17) II	(17) —
(18) 18	(18) 0.5	(18) WH / GY	(18) 459	(18) Air Conditioning Compressor Clutch Relay Control	(18) II	(18) —
19 - 20	—	—	—	Not Occupied	—	—
(21) 21	(21) 0.5	(21) GN / BU	(21) 428	(21) EVAP Canister Purge Solenoid Control	(21) II	(21) —
22	—	—	—	Not Occupied	—	—
(23) 23	(23) 0.5	(23) BK / GN	(23) 580	(23) Engine Control Sensors Low Reference 2	(23) II	(23) —
(24) 24	(24) 0.5	(24) BK / BU	(24) 1271	(24) Accelerator Pedal Position Low Reference 1	(24) II	(24) —
25 - 26	—	—	—	Not Occupied	—	—
(27) 27	(27) 0.5	(27) GN / YE	(27) 3337	(27) Transmission Internal Mode Switch Mode Control Y	(27) II	(27) —
(28) 28	(28) 0.5	(28) BN / GN	(28) 1174	(28) Oil Level Switch Signal	(28) II	(28) —
29	—	—	—	Not Occupied	—	—
(30) 30	(30) 0.5	(30) BK / VT	(30) 1272	(30) Accelerator Pedal Position Low Reference 2	(30) II	(30) —
31	—	—	—	Not Occupied	—	—
(32) 32	(32) 0.75	(32) VT / BU	(32) 5291	(32) Powertrain Main Relay Fused Supply Voltage 2	(32) II	(32) —
(33) 33	(33) 0.5	(33) VT / YE	(33) 5985	(33) Accessory Wake-Up Serial Data	(33) II	(33) —
(34) 34	(34) 0.5	(34) RD / WH	(34) 140	(34) Battery Positive Voltage	(34) II	(34) —
35	—	—	—	Not Occupied	—	—
(36) 36	(36) 0.5	(36) YE / BK	(36) 625	(36) Starter Enable Relay Control	(36) II	(36) —
(37) 37	(37) 0.5	(37) GN / GY	(37) 465	(37) Fuel Pump Primary Relay Control	(37) II	(37) —
(38) 38	(38) 0.5	(38) WH / RD	(38) 1164	(38) Accelerator Pedal Position 5V Reference 1	(38) II	(38) —
(39) 39	(39) 0.5	(39) YE / WH	(39) 1161	(39) Accelerator Pedal Position Signal 1	(39) II	(39) —
(40) 40	(40) 0.5	(40) YE / BN	(40) 331	(40) Oil Pressure Sensor Signal	(40) II	(40) —

Pin	Size	Color	Circuit	Function	Terminal Type ID	Option
(41) 41	(41) 0.5	(41) GN	(41) 380	(41) Air Conditioning Refrigerant Pressure Sensor Signal	(41) II	(41) —
42 - 43	—	—	—	Not Occupied	—	—
(44) 44	(44) 0.5	(44) GN / WH	(44) 1162	(44) Accelerator Pedal Position Signal 2	(44) II	(44) —
(45) 45	(45) 0.5	(45) BN / RD	(45) 1274	(45) Accelerator Pedal Position 5V Reference 2	(45) II	(45) —
46	—	—	—	Not Occupied	—	—
(47) 47	(47) 0.5	(47) VT / GN	(47) 439	(47) Run/Crank Ignition 1 Voltage	(47) II	(47) —
(48) 48	(48) 0.75	(48) VT / BU	(48) 5291	(48) Powertrain Main Relay Fused Supply Voltage 2	(48) II	(48) —
(49) 49	(49) 2.5	(49) VT / BU	(49) 5290	(49) Powertrain Main Relay Fused Supply Voltage 1	(49) I	(49) —

K20 Engine Control Module X1 (LV1)

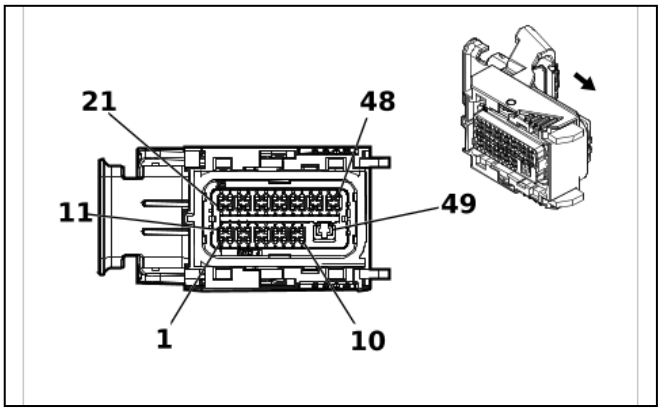

5663663

Connector Part Information

- Harness Type: Engine Wiring Harness
- OEM Connector: 35500079
- Service Connector: 85669159
- Description: 49-Way F 0.64, 2.8 Series, Sealed(BK with BU Terminal Position Assurance)

Terminal Part Information

Terminal Type ID	Terminated Lead	Diagnostic Test Probe	Terminal Removal Tool
I	13587518	J-35616-35 (VT)	J-38125-11A
II	19351723	J-35616-64B (L-BU)	J-38125-213

K20 Engine Control Module X1 (LV1)

Pin	Size	Color	Circuit	Function	Terminal Type ID	Option
(1) 1	(1) 0.5	(1) GN / WH	(1) 492	(1) Mass Air Flow Sensor Signal	(1) II	(1) —
2	—	—	—	Not Occupied	—	—
(3) 3	(3) 0.5	(3) WH	(3) 4499	(3) High Speed GMLAN Serial Data [-] 7	(3) II	(3) —
4 - 5	—	—	—	Not Occupied	—	—

Pin	Size	Color	Circuit	Function	Terminal Type ID	Option
(6) 6	(6) 0.5	(6) WH / BU	(6) 6311	(6) Cruise/ETC/TCC Brake Signal	(6) II	(6) —
(7) 7	(7) 0.5	(7) WH	(7) 2501	(7) High Speed GMLAN Serial Data [-] 1	(7) II	(7) —
(8) 8	(8) 0.5	(8) BN / WH	(8) 419	(8) Check Engine Indicator Control	(8) II	(8) —
(9) 9	(9) 0.5	(9) YE	(9) 5991	(9) Powertrain Relay Coil Control	(9) II	(9) —
10 - 11	—	—	—	Not Occupied	—	—
(12) 12	(12) 0.5	(12) BU / GY	(12) 636	(12) Ambient Air Temperature Sensor Signal	(12) II	(12) —
(13) 13	(13) 0.5	(13) BU / BN	(13) 4498	(13) High Speed GMLAN Serial Data [+] 7	(13) II	(13) —
(14) 14	(14) 0.5	(14) WH / GN	(14) 5380	(14) Brake Position Sensor Signal	(14) II	(14) —
15 - 16	—	—	—	Not Occupied	—	—
(17) 17	(17) 0.5	(17) BU	(17) 2500	(17) High Speed GMLAN Serial Data [+] 1	(17) II	(17) —
(18) 18	(18) 0.5	(18) WH / GY	(18) 459	(18) Air Conditioning Compressor Clutch Relay Control	(18) II	(18) —
19 - 20	—	—	—	Not Occupied	—	—
(21) 21	(21) 0.5	(21) GN / BU	(21) 428	(21) EVAP Canister Purge Solenoid Control	(21) II	(21) —
22	—	—	—	Not Occupied	—	—
(23) 23	(23) 0.5	(23) BK / GN	(23) 580	(23) Engine Control Sensors Low Reference 2	(23) II	(23) —
(24) 24	(24) 0.5	(24) BK / BU	(24) 1271	(24) Accelerator Pedal Position Low Reference 1	(24) II	(24) —
25 - 26	—	—	—	Not Occupied	—	—
(27) 27	(27) 0.5	(27) GN / YE	(27) 3337	(27) Transmission Internal Mode Switch Mode Control Y	(27) II	(27) —
(28) 28	(28) 0.5	(28) BN / GN	(28) 1174	(28) Oil Level Switch Signal	(28) II	(28) —
29	—	—	—	Not Occupied	—	—
(30) 30	(30) 0.5	(30) BK / VT	(30) 1272	(30) Accelerator Pedal Position Low Reference 2	(30) II	(30) —
31	—	—	—	Not Occupied	—	—
(32) 32	(32) 0.75	(32) VT / BU	(32) 5291	(32) Powertrain Main Relay Fused Supply Voltage 2	(32) II	(32) —
(33) 33	(33) 0.5	(33) VT / YE	(33) 5985	(33) Accessory Wake-Up Serial Data	(33) II	(33) —
(34) 34	(34) 0.5	(34) RD / WH	(34) 140	(34) Battery Positive Voltage	(34) II	(34) —
35	—	—	—	Not Occupied	—	—
(36) 36	(36) 0.5	(36) YE / BK	(36) 625	(36) Starter Enable Relay Control	(36) II	(36) —
(37) 37	(37) 0.5	(37) GN / GY	(37) 465	(37) Fuel Pump Primary Relay Control	(37) II	(37) —
(38) 38	(38) 0.5	(38) WH / RD	(38) 1164	(38) Accelerator Pedal Position 5V Reference 1	(38) II	(38) —
(39) 39	(39) 0.5	(39) YE / WH	(39) 1161	(39) Accelerator Pedal Position Signal 1	(39) II	(39) —

Pin	Size	Color	Circuit	Function	Terminal Type ID	Option
(40) 40	(40) 0.5	(40) YE / BN	(40) 331	(40) Oil Pressure Sensor Signal	(40) II	(40) —
(41) 41	(41) 0.5	(41) GN	(41) 380	(41) Air Conditioning Refrigerant Pressure Sensor Signal	(41) II	(41) —
42 - 43	—	—	—	Not Occupied	—	—
(44) 44	(44) 0.5	(44) GN / WH	(44) 1162	(44) Accelerator Pedal Position Signal 2	(44) II	(44) —
(45) 45	(45) 0.5	(45) BN / RD	(45) 1274	(45) Accelerator Pedal Position 5V Reference 2	(45) II	(45) —
46	—	—	—	Not Occupied	—	—
(47) 47	(47) 0.5	(47) VT / GN	(47) 439	(47) Run/Crank Ignition 1 Voltage	(47) II	(47) —
(48) 48	(48) 0.75	(48) VT / BU	(48) 5291	(48) Powertrain Main Relay Fused Supply Voltage 2	(48) II	(48) —
(49) 49	(49) 2.5	(49) VT / BU	(49) 5290	(49) Powertrain Main Relay Fused Supply Voltage 1	(49) I	(49) —

K20 Engine Control Module X2 (L8T)

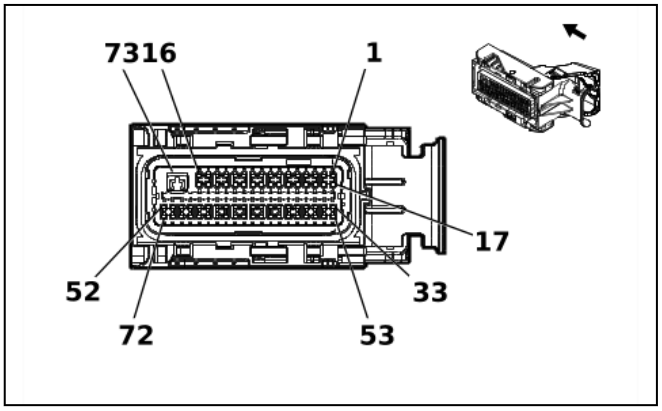

1673472

Connector Part Information

- Harness Type: Engine Wiring Harness
- OEM Connector: 35386331
- Service Connector: 85761019
- Description: 73-Way F 0.64, 2.8 MX123 Series, Sealed(BK with BK Terminal Position Assurance)

Terminal Part Information

Terminal Type ID	Terminated Lead	Diagnostic Test Probe	Terminal Removal Tool
I	13587518	J-35616-35 (VT)	J-38125-11A
II	19354746	J-35616-64B (L-BU)	J-38125-213

K20 Engine Control Module X2 (L8T)

Pin	Size	Color	Circuit	Function	Terminal Type ID	Option
(1) 1	(1) 0.5	(1) GN / YE	(1) 3212	(1) HO2S Heater Low Control Bank 2 Sensor 1	(1) II	(1) —
2	—	—	—	Not Occupied	—	—

Pin	Size	Color	Circuit	Function	Terminal Type ID	Option
(3) 3	(3) 0.5	(3) BK / YE	(3) 548	(3) Engine Control Sensors Low Reference 1	(3) II	(3) —
4 - 6	—	—	—	Not Occupied	—	—
(7) 7	(7) 0.5	(7) GN / WH	(7) 4622	(7) Engine Control Module LIN Bus 2	(7) II	(7) —
8 - 9	—	—	—	Not Occupied	—	—
(10) 10	(10) 0.5	(10) VT / GY	(10) 3110	(10) HO2S High Signal Bank 1 Sensor 1	(10) II	(10) —
(11) 11	(11) 0.5	(11) WH / BK	(11) 3111	(11) HO2S Low Signal Bank 1 Sensor 1	(11) II	(11) —
(12) 12	(12) 0.5	(12) YE / BU	(12) 2124	(12) Ignition Control 4	(12) II	(12) —
(13) 13	(13) 0.5	(13) BN / BU	(13) 2126	(13) Ignition Control 6	(13) II	(13) —
14 - 16	—	—	—	Not Occupied	—	—
(17) 17	(17) 0.5	(17) GY / WH	(17) 3113	(17) HO2S Heater Low Control Bank 1 Sensor 1	(17) II	(17) —
18 - 25	—	—	—	Not Occupied	—	—
(26) 26	(26) 0.5	(26) VT / WH	(26) 3210	(26) HO2S High Signal Bank 2 Sensor 1	(26) II	(26) —
(27) 27	(27) 0.5	(27) YE / WH	(27) 3211	(27) HO2S Low Signal Bank 2 Sensor 1	(27) II	(27) —
(28) 28	(28) 0.5	(28) GN / BU	(28) 2123	(28) Ignition Control 3	(28) II	(28) —
(29) 29	(29) 0.5	(29) BU / GY	(29) 2125	(29) Ignition Control 5	(29) II	(29) —
(30) 30	(30) 0.5	(30) BK / GY	(30) 2130	(30) Ignition Control Low Reference Bank 2	(30) II	(30) —
31 - 32	—	—	—	Not Occupied	—	—
(33) 33	(33) 0.5	(33) WH / BN	(33) 3223	(33) HO2S Heater Low Control Bank 2 Sensor 2	(33) II	(33) —
34	—	—	—	Not Occupied	—	—
(35) 35	(35) 0.5	(35) BU	(35) 179	(35) Engine Oil Pump Control	(35) II	(35) —
36	—	—	—	Not Occupied	—	—
(37) 37	(37) 0.5	(37) VT / BU	(37) 5293	(37) Powertrain Main Relay Fused Supply Voltage 4	(37) II	(37) —
38	—	—	—	Not Occupied	—	—
(39) 39	(39) 0.5	(39) WH / RD	(39) 480	(39) Engine Control Vehicle Sensors 5 Volt Reference 1	(39) II	(39) —
40 - 45	—	—	—	Not Occupied	—	—
(46) 46	(46) 0.5	(46) YE / BU	(46) 3221	(46) HO2S Low Signal Bank 2 Sensor 2	(46) II	(46) —
(47) 47	(47) 0.5	(47) VT / GN	(47) 3220	(47) HO2S High Signal Bank 2 Sensor 2	(47) II	(47) —
48 - 49	—	—	—	Not Occupied	—	—
(50) 50	(50) 0.75	(50) BK / GY	(50) 2303	(50) Knock Sensor Low Reference 2	(50) II	(50) —
(51) 51	(51) 0.75	(51) BK / YE	(51) 1716	(51) Knock Sensor Low Reference 1	(51) II	(51) —
(52) 52	(52) 0.5	(52) BN / WH	(52) 582	(52) Throttle Actuator Close Control	(52) II	(52) —

Pin	Size	Color	Circuit	Function	Terminal Type ID	Option
(53) 53	(53) 0.5	(53) GY / WH	(53) 3122	(53) HO2S Heater Low Control Bank 1 Sensor 2	(53) II	(53) —
54 - 58	—	—	—	Not Occupied	—	—
(59) 59	(59) 0.5	(59) BU / RD	(59) 460	(59) Engine Control Sensors 5 Volt Reference 1	(59) II	(59) —
60 - 65	—	—	—	Not Occupied	—	—
(66) 66	(66) 0.5	(66) WH / YE	(66) 3121	(66) HO2S Low Signal Bank 1 Sensor 2	(66) II	(66) —
(67) 67	(67) 0.5	(67) VT / BU	(67) 3120	(67) HO2S High Signal Bank 1 Sensor 2	(67) II	(67) —
68 - 69	—	—	—	Not Occupied	—	—
(70) 70	(70) 0.75	(70) WH / GY	(70) 1876	(70) Knock Sensor 2 Signal	(70) II	(70) —
(71) 71	(71) 0.75	(71) VT / GY	(71) 496	(71) Knock Sensor 1 Signal	(71) II	(71) —
(72) 72	(72) 0.5	(72) YE	(72) 581	(72) Throttle Actuator Open Control	(72) II	(72) —
(73) 73	(73) 3	(73) BK / WH	(73) 1551	(73) Signal Ground	(73) I	(73) —

K20 Engine Control Module X2 (LV1)

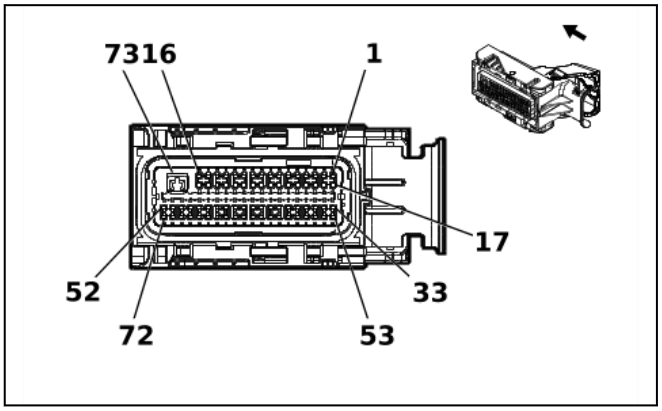

1673472

Connector Part Information

- Harness Type: Engine Wiring Harness
- OEM Connector: 35386331
- Service Connector: 85761019
- Description: 73-Way F 0.64, 2.8 MX123 Series, Sealed(BK with BK Terminal Position Assurance)

Terminal Part Information

Terminal Type ID	Terminated Lead	Diagnostic Test Probe	Terminal Removal Tool
I	13587518	J-35616-35 (VT)	J-38125-11A
II	19354746	J-35616-64B (L-BU)	J-38125-213

K20 Engine Control Module X2 (LV1)

Pin	Size	Color	Circuit	Function	Terminal Type ID	Option
(1) 1	(1) 0.5	(1) GN / YE	(1) 3212	(1) HO2S Heater Low Control Bank 2 Sensor 1	(1) II	(1) —
2	—	—	—	Not Occupied	—	—
(3) 3	(3) 0.5	(3) BK / YE	(3) 548	(3) Engine Control Sensors Low Reference 1	(3) II	(3) —
4 - 6	—	—	—	Not Occupied	—	—
(7) 7	(7) 0.5	(7) GN / WH	(7) 4622	(7) Engine Control Module LIN Bus 2	(7) II	(7) —
8 - 9	—	—	—	Not Occupied	—	—
(10) 10	(10) 0.5	(10) VT / GY	(10) 3110	(10) HO2S High Signal Bank 1 Sensor 1	(10) II	(10) —
(11) 11	(11) 0.5	(11) WH / BK	(11) 3111	(11) HO2S Low Signal Bank 1 Sensor 1	(11) II	(11) —
12	—	—	—	Not Occupied	—	—
(13) 13	(13) 0.5	(13) GN / BU	(13) 2123	(13) Ignition Control 3	(13) II	(13) —
14 - 16	—	—	—	Not Occupied	—	—
(17) 17	(17) 0.5	(17) GY / WH	(17) 3113	(17) HO2S Heater Low Control Bank 1 Sensor 1	(17) II	(17) —
18 - 25	—	—	—	Not Occupied	—	—
(26) 26	(26) 0.5	(26) VT / WH	(26) 3210	(26) HO2S High Signal Bank 2 Sensor 1	(26) II	(26) —
(27) 27	(27) 0.5	(27) YE / WH	(27) 3211	(27) HO2S Low Signal Bank 2 Sensor 1	(27) II	(27) —
28	—	—	—	Not Occupied	—	—
(29) 29	(29) 0.5	(29) BU / WH	(29) 2122	(29) Ignition Control 2	(29) II	(29) —
(30) 30	(30) 0.5	(30) BK / GY	(30) 2130	(30) Ignition Control Low Reference Bank 2	(30) II	(30) —
31 - 32	—	—	—	Not Occupied	—	—
(33) 33	(33) 0.5	(33) WH / BN	(33) 3223	(33) HO2S Heater Low Control Bank 2 Sensor 2	(33) II	(33) —
34 - 36	—	—	—	Not Occupied	—	—
(37) 37	(37) 0.5	(37) VT / BU	(37) 5293	(37) Powertrain Main Relay Fused Supply Voltage 4	(37) II	(37) —
38	—	—	—	Not Occupied	—	—
(39) 39	(39) 0.5	(39) WH / RD	(39) 480	(39) Engine Control Vehicle Sensors 5 Volt Reference 1	(39) II	(39) —
40 - 45	—	—	—	Not Occupied	—	—
(46) 46	(46) 0.5	(46) YE / BU	(46) 3221	(46) HO2S Low Signal Bank 2 Sensor 2	(46) II	(46) —
(47) 47	(47) 0.5	(47) VT / GN	(47) 3220	(47) HO2S High Signal Bank 2 Sensor 2	(47) II	(47) —
48 - 49	—	—	—	Not Occupied	—	—
(50) 50	(50) 0.75	(50) BK / GY	(50) 2303	(50) Knock Sensor Low Reference 2	(50) II	(50) —
(51) 51	(51) 0.75	(51) BK / YE	(51) 1716	(51) Knock Sensor Low Reference 1	(51) II	(51) —

Pin	Size	Color	Circuit	Function	Terminal Type ID	Option
(52) 52	(52) 0.5	(52) BN / WH	(52) 582	(52) Throttle Actuator Close Control	(52) II	(52) —
(53) 53	(53) 0.5	(53) GY / WH	(53) 3122	(53) HO2S Heater Low Control Bank 1 Sensor 2	(53) II	(53) —
54 - 58	—	—	—	Not Occupied	—	—
(59) 59	(59) 0.5	(59) BU / RD	(59) 460	(59) Engine Control Sensors 5 Volt Reference 1	(59) II	(59) —
60 - 65	—	—	—	Not Occupied	—	—
(66) 66	(66) 0.5	(66) WH / YE	(66) 3121	(66) HO2S Low Signal Bank 1 Sensor 2	(66) II	(66) —
(67) 67	(67) 0.5	(67) VT / BU	(67) 3120	(67) HO2S High Signal Bank 1 Sensor 2	(67) II	(67) —
68 - 69	—	—	—	Not Occupied	—	—
(70) 70	(70) 0.75	(70) WH / GY	(70) 1876	(70) Knock Sensor 2 Signal	(70) II	(70) —
(71) 71	(71) 0.75	(71) VT / GY	(71) 496	(71) Knock Sensor 1 Signal	(71) II	(71) —
(72) 72	(72) 0.5	(72) YE	(72) 581	(72) Throttle Actuator Open Control	(72) II	(72) —
(73) 73	(73) 3	(73) BK / WH	(73) 1551	(73) Signal Ground	(73) I	(73) —

K20 Engine Control Module X3 (L8T)

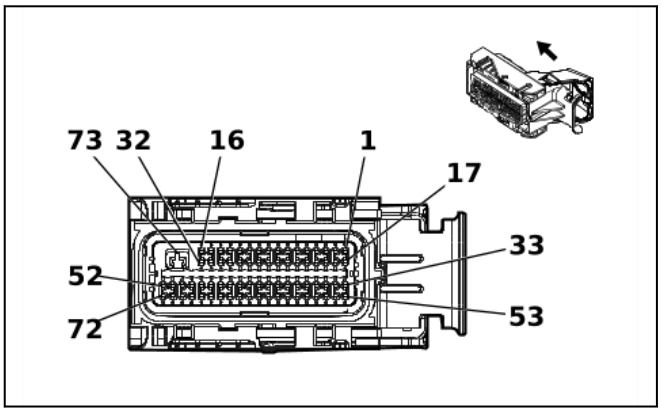

1650395

Connector Part Information

- Harness Type: Engine Wiring Harness
- OEM Connector: 35505841
- Service Connector: 85761016
- Description: 73-Way F 0.64, 2.8 MX123 Series, Sealed(BK with GY Terminal Position Assurance)

Terminal Part Information

Terminal Type ID	Terminated Lead	Diagnostic Test Probe	Terminal Removal Tool
I	13587518	J-35616-35 (VT)	J-38125-11A
II	19354746	J-35616-64B (L-BU)	J-38125-213

K20 Engine Control Module X3 (L8T)

Pin	Size	Color	Circuit	Function	Terminal Type ID	Option
1 - 4	—	—	—	Not Occupied	—	—
(5) 5	(5) 0.5	(5) VT / BN	(5) 5284	(5) Intake Camshaft Position Actuator Solenoid Valve 1	(5) II	(5) —
(6) 6	(6) 0.5	(6) VT / GN	(6) 4320	(6) Powertrain Sensor Bus Enable	(6) II	(6) —
7	—	—	—	Not Occupied	—	—
(8) 8	(8) 0.5	(8) YE / VT	(8) 5275	(8) Intake Camshaft Position Sensor 1	(8) II	(8) —
(9) 9	(9) 0.5	(9) GY / BU	(9) 5300	(9) Intake Camshaft Position Sensor 1 Voltage Reference	(9) II	(9) —
(10) 10	(10) 0.5	(10) GN	(10) 6271	(10) Crankshaft Position Sensor Signal	(10) II	(10) —
11	—	—	—	Not Occupied	—	—
(12) 12	(12) 0.5	(12) BU / WH	(12) 2122	(12) Ignition Control 2	(12) II	(12) —
(13) 13	(13) 0.5	(13) VT / WH	(13) 2128	(13) Ignition Control 8	(13) II	(13) —
(14) 14	(14) 0.5	(14) BN	(14) 25	(14) Charge Indicator Control	(14) II	(14) —
15	—	—	—	Not Occupied	—	—
(16) 16	(16) 0.75	(16) YE	(16) 7301	(16) High Pressure Fuel Pump High Control	(16) II	(16) —
17 - 20	—	—	—	Not Occupied	—	—
(21) 21	(21) 0.5	(21) BK / BN	(21) 6753	(21) Camshaft Position Actuator Solenoid Valve 1 Low Reference	(21) II	(21) —
22 - 23	—	—	—	Not Occupied	—	—
(24) 24	(24) 0.5	(24) BK / GN	(24) 5301	(24) Intake Camshaft Position Sensor Low Reference 1	(24) II	(24) —
(25) 25	(25) 0.5	(25) VT / BU	(25) 6270	(25) Crankshaft Position Sensor Voltage	(25) II	(25) —
(26) 26	(26) 0.5	(26) BK / VT	(26) 6272	(26) Crankshaft Position Sensor Low Reference	(26) II	(26) —
27	—	—	—	Not Occupied	—	—
(28) 28	(28) 0.5	(28) GN / GY	(28) 2127	(28) Ignition Control 7	(28) II	(28) —
(29) 29	(29) 0.5	(29) BU / VT	(29) 2121	(29) Ignition Control 1	(29) II	(29) —
(30) 30	(30) 0.5	(30) BK / BU	(30) 2129	(30) Ignition Control Low Reference Bank 1	(30) II	(30) —
31	—	—	—	Not Occupied	—	—
(32) 32	(32) 0.75	(32) VT / BK	(32) 7300	(32) High Pressure Fuel Pump Low Control	(32) II	(32) —
33 - 35	—	—	—	Not Occupied	—	—
(36) 36	(36) 0.5	(36) BK / BN	(36) 2752	(36) Throttle Position Sensor Low Reference	(36) II	(36) —
(37) 37	(37) 0.5	(37) BK / GN	(37) 469	(37) Manifold Absolute Pressure Sensor Low Reference	(37) II	(37) —
38 - 39	—	—	—	Not Occupied	—	—
(40) 40	(40) 0.5	(40) BN / BU	(40) 357	(40) Oil Temperature Sensor Signal	(40) II	(40) —
41 - 42	—	—	—	Not Occupied	—	—

Pin	Size	Color	Circuit	Function	Terminal Type ID	Option
(43) 43	(43) 0.5	(43) BK / GY	(43) 626	(43) Engine Control Vehicle Sensors Low Reference 1	(43) II	(43) —
(44) 44	(44) 0.75	(44) VT / BU	(44) 1239	(44) Run/Crank Ignition 1 Voltage	(44) II	(44) —
(45) 45	(45) 0.75	(45) GN	(45) 4803	(45) Direct Fuel Injector High Voltage Control Cylinder 3	(45) II	(45) —
(46) 46	(46) 0.75	(46) GY / BU	(46) 4804	(46) Direct Fuel Injector High Voltage Control Cylinder 4	(46) II	(46) —
(47) 47	(47) 0.75	(47) WH / GN	(47) 4805	(47) Direct Fuel Injector High Voltage Control Cylinder 5	(47) II	(47) —
(48) 48	(48) 0.75	(48) VT / GN	(48) 4806	(48) Direct Fuel Injector High Voltage Control Cylinder 6	(48) II	(48) —
(49) 49	(49) 0.75	(49) BU	(49) 4802	(49) Direct Fuel Injector High Voltage Control Cylinder 2	(49) II	(49) —
(50) 50	(50) 0.75	(50) YE / GY	(50) 4807	(50) Direct Fuel Injector High Voltage Control Cylinder 7	(50) II	(50) —
(51) 51	(51) 0.75	(51) GY	(51) 4808	(51) Direct Fuel Injector High Voltage Control Cylinder 8	(51) II	(51) —
(52) 52	(52) 0.75	(52) BN	(52) 4801	(52) Direct Fuel Injector High Voltage Control Cylinder 1	(52) II	(52) —
53 - 54	—	—	—	Not Occupied	—	—
(55) 55	(55) 0.5	(55) BN / RD	(55) 2701	(55) Throttle Position Sensor 5V Reference	(55) II	(55) —
(56) 56	(56) 0.5	(56) BU / WH	(56) 3630	(56) Throttle Position Sensor SENT 1 Signal	(56) II	(56) —
(57) 57	(57) 0.5	(57) GY / RD	(57) 2704	(57) Manifold Absolute Pressure Sensor 5V Reference	(57) II	(57) —
(58) 58	(58) 0.5	(58) GN / WH	(58) 432	(58) Manifold Absolute Pressure Sensor Signal	(58) II	(58) —
59 - 60	—	—	—	Not Occupied	—	—
(61) 61	(61) 0.5	(61) BU	(61) 410	(61) Engine Coolant Temperature Sensor Signal	(61) II	(61) —
62	—	—	—	Not Occupied	—	—
(63) 63	(63) 0.5	(63) BU / WH	(63) 2918	(63) Fuel Rail Pressure Sensor Signal	(63) II	(63) —
(64) 64	(64) 0.5	(64) GY	(64) 23	(64) Generator Field Duty Cycle Signal	(64) II	(64) —
(65) 65	(65) 0.75	(65) GN / GY	(65) 4903	(65) Direct Fuel Injector High Voltage Supply Cylinder 3	(65) II	(65) —
(66) 66	(66) 0.75	(66) BU / WH	(66) 4904	(66) Direct Fuel Injector High Voltage Supply Cylinder 4	(66) II	(66) —
(67) 67	(67) 0.75	(67) GN / WH	(67) 4905	(67) Direct Fuel Injector High Voltage Supply Cylinder 5	(67) II	(67) —
(68) 68	(68) 0.75	(68) VT / GY	(68) 4906	(68) Direct Fuel Injector High Voltage Supply Cylinder 6	(68) II	(68) —
(69) 69	(69) 0.75	(69) BU / GY	(69) 4902	(69) Direct Fuel Injector High Voltage Supply Cylinder 2	(69) II	(69) —
(70) 70	(70) 0.75	(70) WH / YE	(70) 4907	(70) Direct Fuel Injector High Voltage Supply Cylinder 7	(70) II	(70) —
(71) 71	(71) 0.75	(71) GY / WH	(71) 4908	(71) Direct Fuel Injector High Voltage Supply Cylinder 8	(71) II	(71) —

Pin	Size	Color	Circuit	Function	Terminal Type ID	Option
(72) 72	(72) 0.75	(72) BN / WH	(72) 4901	(72) Direct Fuel Injector High Voltage Supply Cylinder 1	(72) II	(72) —
(73) 73	(73) 3	(73) BK / WH	(73) 1551	(73) Signal Ground	(73) I	(73) —

K20 Engine Control Module X3 (LV1)

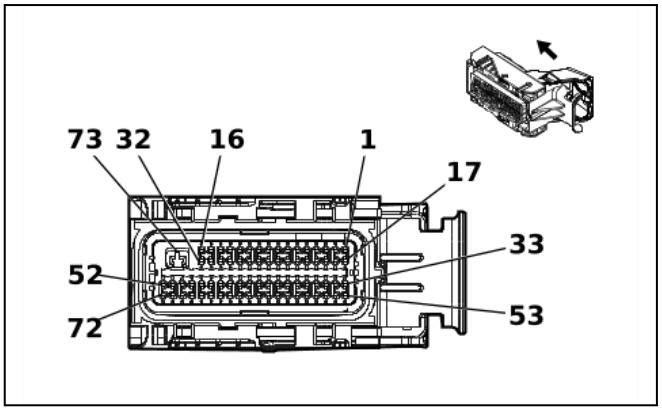

1650395

Connector Part Information

- Harness Type: Engine Wiring Harness
- OEM Connector: 35505841
- Service Connector: 85761016
- Description: 73-Way F 0.64, 2.8 MX123 Series, Sealed(BK with GY Terminal Position Assurance)

Terminal Part Information

Terminal Type ID	Terminated Lead	Diagnostic Test Probe	Terminal Removal Tool
I	13587518	J-35616-35 (VT)	J-38125-11A
II	19354746	J-35616-64B (L-BU)	J-38125-213

K20 Engine Control Module X3 (LV1)

Pin	Size	Color	Circuit	Function	Terminal Type ID	Option
1 - 4	—	—	—	Not Occupied	—	—
(5) 5	(5) 0.5	(5) VT / BN	(5) 5284	(5) Intake Camshaft Position Actuator Solenoid Valve 1	(5) II	(5) —
(6) 6	(6) 0.5	(6) VT / GN	(6) 4320	(6) Powertrain Sensor Bus Enable	(6) II	(6) —
7	—	—	—	Not Occupied	—	—
(8) 8	(8) 0.5	(8) YE / VT	(8) 5275	(8) Intake Camshaft Position Sensor 1	(8) II	(8) —
(9) 9	(9) 0.5	(9) GY / BU	(9) 5300	(9) Intake Camshaft Position Sensor 1 Voltage Reference	(9) II	(9) —
(10) 10	(10) 0.5	(10) GN	(10) 6271	(10) Crankshaft Position Sensor Signal	(10) II	(10) —
11	—	—	—	Not Occupied	—	—
(12) 12	(12) 0.5	(12) YE / BU	(12) 2124	(12) Ignition Control 4	(12) II	(12) —
(13) 13	(13) 0.5	(13) BN / BU	(13) 2126	(13) Ignition Control 6	(13) II	(13) —

Pin	Size	Color	Circuit	Function	Terminal Type ID	Option
(14) 14	(14) 0.5	(14) BN	(14) 25	(14) Charge Indicator Control	(14) II	(14) —
15	—	—	—	Not Occupied	—	—
(16) 16	(16) 0.75	(16) YE	(16) 7301	(16) High Pressure Fuel Pump High Control	(16) II	(16) —
17 - 20	—	—	—	Not Occupied	—	—
(21) 21	(21) 0.5	(21) BK / BN	(21) 6753	(21) Camshaft Position Actuator Solenoid Valve 1 Low Reference	(21) II	(21) —
22 - 23	—	—	—	Not Occupied	—	—
(24) 24	(24) 0.5	(24) BK / GN	(24) 5301	(24) Intake Camshaft Position Sensor Low Reference 1	(24) II	(24) —
(25) 25	(25) 0.5	(25) VT / BU	(25) 6270	(25) Crankshaft Position Sensor Voltage	(25) II	(25) —
(26) 26	(26) 0.5	(26) BK / VT	(26) 6272	(26) Crankshaft Position Sensor Low Reference	(26) II	(26) —
27	—	—	—	Not Occupied	—	—
(28) 28	(28) 0.5	(28) BU / GY	(28) 2125	(28) Ignition Control 5	(28) II	(28) —
(29) 29	(29) 0.5	(29) BU / VT	(29) 2121	(29) Ignition Control 1	(29) II	(29) —
(30) 30	(30) 0.5	(30) BK / BU	(30) 2129	(30) Ignition Control Low Reference Bank 1	(30) II	(30) —
31	—	—	—	Not Occupied	—	—
(32) 32	(32) 0.75	(32) VT / BK	(32) 7300	(32) High Pressure Fuel Pump Low Control	(32) II	(32) —
33 - 35	—	—	—	Not Occupied	—	—
(36) 36	(36) 0.5	(36) BK / BN	(36) 2752	(36) Throttle Position Sensor Low Reference	(36) II	(36) —
(37) 37	(37) 0.5	(37) BK / GN	(37) 469	(37) Manifold Absolute Pressure Sensor Low Reference	(37) II	(37) —
38 - 42	—	—	—	Not Occupied	—	—
(43) 43	(43) 0.5	(43) BK / GY	(43) 626	(43) Engine Control Vehicle Sensors Low Reference 1	(43) II	(43) —
(44) 44	(44) 0.75	(44) VT / BK	(44) 1239	(44) Run/Crank Ignition 1 Voltage	(44) II	(44) —
45 - 46	—	—	—	Not Occupied	—	—
(47) 47	(47) 0.75	(47) BU	(47) 4802	(47) Direct Fuel Injector High Voltage Control Cylinder 2	(47) II	(47) —
(48) 48	(48) 0.75	(48) GN	(48) 4803	(48) Direct Fuel Injector High Voltage Control Cylinder 3	(48) II	(48) —
(49) 49	(49) 0.75	(49) GY / BU	(49) 4804	(49) Direct Fuel Injector High Voltage Control Cylinder 4	(49) II	(49) —
(50) 50	(50) 0.75	(50) WH / GN	(50) 4805	(50) Direct Fuel Injector High Voltage Control Cylinder 5	(50) II	(50) —
(51) 51	(51) 0.75	(51) VT / GN	(51) 4806	(51) Direct Fuel Injector High Voltage Control Cylinder 6	(51) II	(51) —
(52) 52	(52) 0.75	(52) BN	(52) 4801	(52) Direct Fuel Injector High Voltage Control Cylinder 1	(52) II	(52) —
53 - 54	—	—	—	Not Occupied	—	—
(55) 55	(55) 0.5	(55) BN / RD	(55) 2701	(55) Throttle Position Sensor 5V Reference	(55) II	(55) —

Pin	Size	Color	Circuit	Function	Terminal Type ID	Option
(56) 56	(56) 0.5	(56) BU / WH	(56) 3630	(56) Throttle Position Sensor SENT 1 Signal	(56) II	(56) —
(57) 57	(57) 0.5	(57) GY / RD	(57) 2704	(57) Manifold Absolute Pressure Sensor 5V Reference	(57) II	(57) —
(58) 58	(58) 0.5	(58) GN / WH	(58) 432	(58) Manifold Absolute Pressure Sensor Signal	(58) II	(58) —
59 - 60	—	—	—	Not Occupied	—	—
(61) 61	(61) 0.5	(61) BU	(61) 410	(61) Engine Coolant Temperature Sensor Signal	(61) II	(61) —
62	—	—	—	Not Occupied	—	—
(63) 63	(63) 0.5	(63) BU / WH	(63) 10786	(63) Fuel Rail Pressure Sensor SENT 1 Signal	(63) II	(63) —
(64) 64	(64) 0.5	(64) GY	(64) 23	(64) Generator Field Duty Cycle Signal	(64) II	(64) —
65 - 66	—	—	—	Not Occupied	—	—
(67) 67	(67) 0.75	(67) BU / GY	(67) 4902	(67) Direct Fuel Injector High Voltage Supply Cylinder 2	(67) II	(67) —
(68) 68	(68) 0.75	(68) GN / GY	(68) 4903	(68) Direct Fuel Injector High Voltage Supply Cylinder 3	(68) II	(68) —
(69) 69	(69) 0.75	(69) BU / WH	(69) 4904	(69) Direct Fuel Injector High Voltage Supply Cylinder 4	(69) II	(69) —
(70) 70	(70) 0.75	(70) GN / WH	(70) 4905	(70) Direct Fuel Injector High Voltage Supply Cylinder 5	(70) II	(70) —
(71) 71	(71) 0.75	(71) VT / GY	(71) 4906	(71) Direct Fuel Injector High Voltage Supply Cylinder 6	(71) II	(71) —
(72) 72	(72) 0.75	(72) BN / WH	(72) 4901	(72) Direct Fuel Injector High Voltage Supply Cylinder 1	(72) II	(72) —
(73) 73	(73) 3	(73) BK / WH	(73) 1551	(73) Signal Ground	(73) I	(73) —

K33A HVAC Control Module - Auxiliary

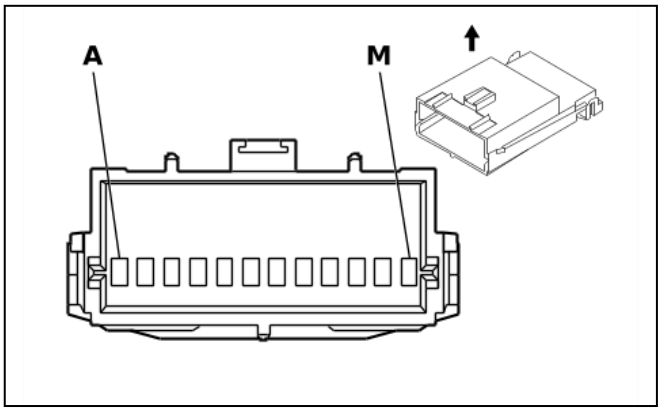

328486

Connector Part Information

- Harness Type: Roof Console Wiring Harness
- OEM Connector: 12040747
- Service Connector: 12101938
- Description: 12-Way F PC Edgeboard Standard Series(BK)

Terminal Part Information

Terminal Type ID	Terminated Lead	Diagnostic Test Probe	Terminal Removal Tool
I	19330178	J-35616-4A (PU)	J-38125-12A

K33A HVAC Control Module - Auxiliary

Pin	Size	Color	Circuit	Function	Terminal Type ID	Option
A	0.35	PU	5260	Auxiliary HVAC Front Temperature Signal	I	—
B	0.35	OG	2775	Rear Air Temperature Door Actuator Control	I	—
C	0.5	BN	5263	Auxiliary HVAC Rear Temperature Signal	I	—
D	0.5	PU / WH	5264	Auxiliary HVAC Rear Mode Signal	I	—
E	0.35	TN	5261	Auxiliary HVAC Front Mode Signal	I	—
F	0.35	GY	2599	Rear Mode Door Actuator Signal	I	—
G	—	—	—	Not Occupied	—	—
H	0.35	BK	1850	Ground	I	—
J	0.35	BN	341	Run Ignition 3 Voltage	I	—
K	—	—	—	Not Occupied	—	—
L	0.5	PK / BK	5265	Auxiliary HVAC Rear Control Signal	I	—
M	0.35	YE	5262	Auxiliary HVAC Rear Controls Enable Signal	I	—

K36 Inflatable Restraint Sensing and Diagnostic Module X1

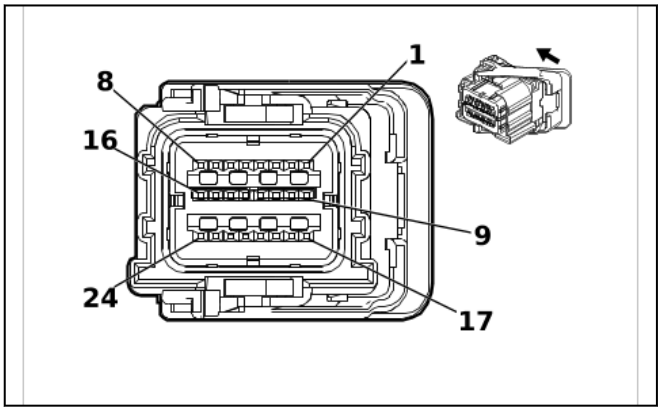

3240106

Connector Part Information

- Harness Type: Body Wiring Harness
- OEM Connector: 35624330
- Service Connector: 13579314
- Description: 24-Way F 0.64 Series, Sealed(YE)

Terminal Part Information

Terminal Type ID	Terminated Lead	Diagnostic Test Probe	Terminal Removal Tool
I	19328872	J-35616-64B (L-BU)	J-38125-215A

K36 Inflatable Restraint Sensing and Diagnostic Module X1

Pin	Size	Color	Circuit	Function	Terminal Type ID	Option
1 - 2	—	—	—	Not Occupied	—	—
(3) 3	(3) 0.5	(3) BN	(3) 3020	(3) Steering Wheel Air Bag Stage 1 Low Control	(3) I	(3) —
(4) 4	(4) 0.5	(4) TN	(4) 3021	(4) Steering Wheel Air Bag Stage 1 High Control	(4) I	(4) —
(5) 5	(5) 0.5	(5) YE	(5) 3025	(5) Passenger Instrument Panel Air Bag Stage 1 High Control	(5) I	(5) —
(6) 6	(6) 0.5	(6) OG	(6) 3024	(6) Passenger Instrument Panel Air Bag Stage 1 Low Control	(6) I	(6) —
7 - 8	—	—	—	Not Occupied	—	—
(9) 9	(9) 0.5	(9) RD / WH	(9) 3440	(9) Battery Positive Voltage	(9) I	(9) —
10 - 12	—	—	—	Not Occupied	—	—
(13) 13	(13) 0.5	(13) PK	(13) 353	(13) Passenger Supplemental Inflatable Restraint Suppression Indicator Control	(13) I	(13) —
(14) 14	(14) 0.5	(14) TN / BK	(14) 371	(14) Passenger Supplemental Inflatable Restraint Disable Switch Signal	(14) I	(14) —
(15) 15	(15) 0.35	(15) GN	(15) 5060	(15) Low Speed GMLAN Serial Data	(15) I	(15) —
16	—	—	—	Not Occupied	—	—
(17) 17	(17) 0.35	(17) PK	(17) 1139	(17) Run/Crank Ignition 1 Voltage	(17) I	(17) —
18	—	—	—	Not Occupied	—	—
(19) 19	(19) 0.5	(19) BK / WH	(19) 1751	(19) Signal Ground	(19) I	(19) —
20 - 24	—	—	—	Not Occupied	—	—

K36 Inflatable Restraint Sensing and Diagnostic Module X2

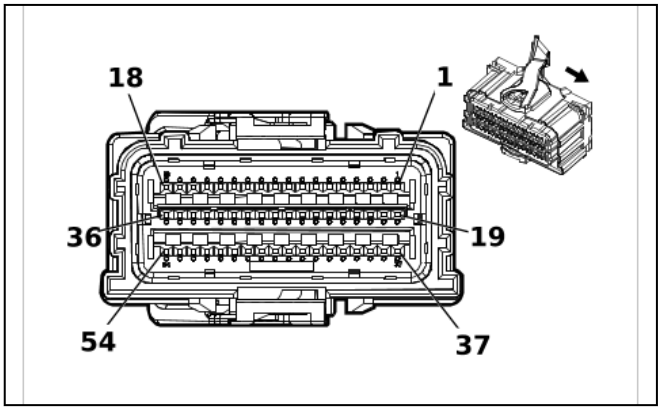

2817420

Connector Part Information

- Harness Type: Body Wiring Harness
- OEM Connector: 2361158-7
- Service Connector: 86579820
- Description: 54-Way F 0.64 Series, Sealed(YE)

Terminal Part Information

Terminal Type ID	Terminated Lead	Diagnostic Test Probe	Terminal Removal Tool
I	19328872	J-35616-64B (L-BU)	J-38125-215A
II	Not required	No Tool Required	No Tool Required

K36 Inflatable Restraint Sensing and Diagnostic Module X2

Pin	Size	Color	Circuit	Function	Terminal Type ID	Option
1 - 10	—	—	—	Not Occupied	—	—
(11) 11	(11) 0.5	(11) TN / BK	(11) 7016	(11) Right Rear Roof Rail Air Bag Low Control	(11) I	(11) —
(12) 12	(12) 0.5	(12) BU	(12) 7015	(12) Right Rear Roof Rail Air Bag High Control	(12) I	(12) —
(13) 13	(13) 0.5	(13) BN	(13) 2137	(13) Left Front Seat Side Air Bag High Control	(13) I	(13) —
(14) 14	(14) 0.5	(14) YE / BK	(14) 2138	(14) Left Front Seat Side Air Bag Low Control	(14) I	(14) —
(15) 15	(15) 0.5	(15) GN	(15) 2136	(15) Right Front Seat Side Air Bag Low Control	(15) I	(15) —
(16) 16	(16) 0.5	(16) TN / WH	(16) 2135	(16) Right Front Seat Side Air Bag High Control	(16) I	(16) —
(17) 17	(17) 0.5	(17) PU / WH	(17) 5019	(17) Left Front Roof Rail Air Bag High Control	(17) I	(17) —
(18) 18	(18) 0.5	(18) PK	(18) 5020	(18) Left Front Roof Rail Air Bag Low Control	(18) I	(18) —
(19) 19	(19) 0.5	(19) WH	(19) 2132	(19) Left Front Side Impact Sensor Signal	(19) I	(19) —
(20) 20	(20) 0.5	(20) PU / WH	(20) 6628	(20) Left Front Side Impact Sensor Low Reference	(20) I	(20) —
(21) 21	(21) 0.5	(21) WH / BK	(21) 6629	(21) Right Front Side Impact Sensor Low Reference	(21) I	(21) —
(22) 22	(22) 0.5	(22) GN	(22) 2134	(22) Right Front Side Impact Sensor Signal	(22) I	(22) —
23 - 24	—	—	—	Not Occupied	—	—
(25) 25	(25) 0.5	(25) BU / WH	(25) 6619	(25) Front Middle Impact Discriminating Sensor Low Reference	(25) I	(25) —
(26) 26	(26) 0.5	(26) BN / WH	(26) 6618	(26) Front Middle Impact Discriminating Sensor Signal	(26) I	(26) —
(27) 27	(27) 0.5	(27) GN / WH	(27) 6620	(27) Left Middle Side Impact Sensor Signal	(27) I	(27) —
(28) 28	(28) 0.5	(28) GY / BK	(28) 6621	(28) Left Middle Side Impact Sensor Low Reference	(28) I	(28) —
(29) 29	(29) 0.5	(29) GN / WH	(29) 6625	(29) Right Middle Side Impact Sensor Low Reference	(29) I	(29) —
(30) 30	(30) 0.5	(30) BU / BK	(30) 6624	(30) Right Middle Side Impact Sensor Signal	(30) I	(30) —
31 - 36	—	—	—	Not Occupied	—	—
(37) 37	(37) 0.5	(37) TN / WH	(37) 2118	(37) Driver Seat Belt Pretensioner High Control	(37) I	(37) —
(38) 38	(38) 0.5	(38) OG / BK	(38) 2119	(38) Driver Seat Belt Pretensioner Low Control	(38) I	(38) —
(39) 39	(39) 0.5	(39) OG	(39) 2117	(39) Passenger Seat Belt Pretensioner Low Control	(39) I	(39) —
(40) 40	(40) 0.5	(40) GN	(40) 2116	(40) Passenger Seat Belt Pretensioner High Control	(40) I	(40) —
(41) 41	(41) 0.5	(41) TN / WH	(41) 238	(41) Driver Seat Belt Switch Signal	(41) I	(41) —

Pin	Size	Color	Circuit	Function	Terminal Type ID	Option
42	—	—	—	Not Occupied	—	—
(43) 43	(43) 0.5	(43) PK	(43) 5057	(43) Seat Position Switch Low Reference	(43) I	(43) —
(44) 44	(44) —	(44) PK	(44) 1361	(44) Passenger Seat Belt Switch Low Reference	(44) II	(44) —
(45) 45	(45) —	(45) OG	(45) 1362	(45) Passenger Seat Belt Switch Signal	(45) II	(45) —
46	—	—	—	Not Occupied	—	—
(47) 47	(47) —	(47) OG / BN	(47) 7571	(47) Passenger Seat Belt Reminder Signal	(47) II	(47) —
48 - 52	—	—	—	Not Occupied	—	—
(53) 53	(53) 0.5	(53) YE / BK	(53) 5021	(53) Right Front Roof Rail Air Bag High Control	(53) I	(53) —
(54) 54	(54) 0.5	(54) WH / BK	(54) 5022	(54) Right Front Roof Rail Air Bag Low Control	(54) I	(54) —

K64 Content Theft Deterrent Control Module

—

Connector Part Information

- Harness Type: Rear Window Defogger Wiring Harness
- OEM Connector: Not Available
- Service Connector: Service by Harness - See Part Catalog
- Description: 4-Way

Terminal Part Information

Terminal Type ID	Terminated Lead	Diagnostic Test Probe	Terminal Removal Tool
I	Not required	No Tool Required	No Tool Required

K64 Content Theft Deterrent Control Module

Pin	Size	Color	Circuit	Function	Terminal Type ID	Option
(1) 1	(1) —	(1) RD / WH	(1) 540	(1) Battery Positive Voltage	(1) I	(1) —
(2) 2	(2) —	(2) BN	(2) 4	(2) Accessory Ignition Voltage	(2) I	(2) —
(3) 3	(3) —	(3) BK / WH	(3) 351	(3) Signal Ground	(3) I	(3) —
(4) 4	(4) —	(4) GN	(4) 5060	(4) Low Speed GMLAN Serial Data	(4) I	(4) —

K71 Transmission Control Module

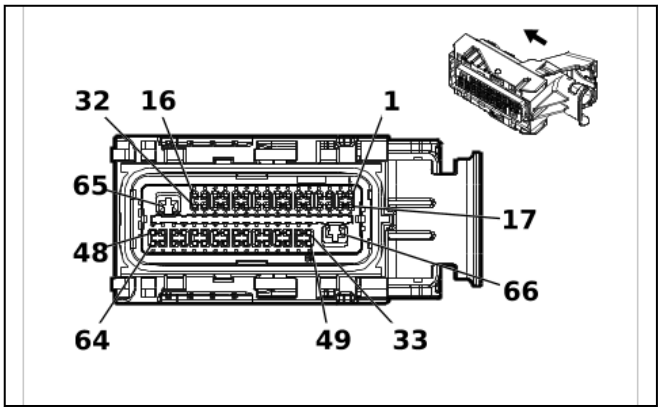

3621452

Connector Part Information

- Harness Type: Engine Wiring Harness
- OEM Connector: 34822-0013
- Service Connector: 85761018
- Description: 66-Way F 0.64, 2.8 MX123 Series, Sealed(BK with BK Terminal Position Assurance)

Terminal Part Information

Terminal Type ID	Terminated Lead	Diagnostic Test Probe	Terminal Removal Tool
I	13587518	J-35616-35 (VT)	J-38125-11A
II	19351723	J-35616-64B (L-BU)	J-38125-213

K71 Transmission Control Module

Pin	Size	Color	Circuit	Function	Terminal Type ID	Option
(1) 1	(1) 0.5	(1) WH / BU	(1) 4507	(1) Transmission Clutch H Control	(1) II	(1) —
(2) 2	(2) 0.5	(2) BU	(2) 6401	(2) Clutch Solenoid Valve B Control	(2) II	(2) —
(3) 3	(3) 0.5	(3) GN / WH	(3) 1530	(3) Transmission Line Pressure Control Solenoid Valve Control	(3) II	(3) —
4	—	—	—	Not Occupied	—	—
(5) 5	(5) 0.5	(5) GY / RD	(5) 10817	(5) Lubricant Circuit Pressure Sensor 5 Volt Reference	(5) II	(5) —
6	—	—	—	Not Occupied	—	—
(7) 7	(7) 0.5	(7) YE / GN	(7) 4170	(7) Transmission Output Shaft Speed Sensor Circuit 9V Reference	(7) II	(7) —
(8) 8	(8) 0.5	(8) YE / BU	(8) 4171	(8) Transmission Input Shaft Speed Sensor Circuit 9V Reference	(8) II	(8) —
9 - 10	—	—	—	Not Occupied	—	—
(11) 11	(11) 0.5	(11) BU / BK	(11) 10819	(11) Lubricant Circuit Pressure Sensor Low Reference	(11) II	(11) —
12	—	—	—	Not Occupied	—	—
(13) 13	(13) 0.5	(13) GN / VT	(13) 4510	(13) Transmission Intermediate Speed Signal	(13) II	(13) —
(14) 14	(14) 0.5	(14) GY / BU	(14) 6358	(14) Output Speed Signal	(14) II	(14) —
(15) 15	(15) 0.5	(15) GN / YE	(15) 6353	(15) Input Speed Signal	(15) II	(15) —

Pin	Size	Color	Circuit	Function	Terminal Type ID	Option
16	—	—	—	Not Occupied	—	—
(17) 17	(17) 0.5	(17) WH	(17) 4508	(17) Transmission Clutch G Control	(17) II	(17) —
(18) 18	(18) 0.5	(18) BN	(18) 6400	(18) Clutch Solenoid Valve A Control	(18) II	(18) —
(19) 19	(19) 0.5	(19) GY	(19) 6402	(19) Clutch Solenoid Valve C Control	(19) II	(19) —
(20) 20	(20) 0.5	(20) VT / WH	(20) 422	(20) Torque Converter Clutch Solenoid Valve Control	(20) II	(20) —
(21) 21	(21) 0.5	(21) GN / WH	(21) 6380	(21) Torque Converter Clutch Enable Solenoid Valve A Control	(21) II	(21) —
(22) 22	(22) 0.5	(22) YE / BN	(22) 6210	(22) Torque Converter Clutch Enable Solenoid Valve B Control	(22) II	(22) —
23 - 27	—	—	—	Not Occupied	—	—
(28) 28	(28) 0.5	(28) BK / BN	(28) 586	(28) Transmission Fluid Temperature Sensor Low Reference	(28) II	(28) —
29 - 32	—	—	—	Not Occupied	—	—
(33) 33	(33) 0.5	(33) GN / GY	(33) 6387	(33) Transmission High Side Driver 1 Control	(33) II	(33) —
34	—	—	—	Not Occupied	—	—
(35) 35	(35) 0.5	(35) VT / BK	(35) 2139	(35) Run/Crank Ignition 1 Voltage	(35) II	(35) —
36	—	—	—	Not Occupied	—	—
(37) 37	(37) 0.5	(37) BU	(37) 2500	(37) High Speed GMLAN Serial Data [+] 1	(37) II	(37) —
(38) 38	(38) 0.5	(38) WH	(38) 2501	(38) High Speed GMLAN Serial Data [-] 1	(38) II	(38) —
39 - 44	—	—	—	Not Occupied	—	—
(45) 45	(45) 0.5	(45) GN / YE	(45) 10816	(45) Lubricant Circuit Pressure Sensor Signal	(45) II	(45) —
46 - 48	—	—	—	Not Occupied	—	—
(49) 49	(49) 0.5 (49) 0.75	(49) GY / BN (49) GY / BN	(49) 6388 (49) 6388	(49) Transmission High Side Driver 2 Control (49) Transmission High Side Driver 2 Control	(49) II (49) II	(49) L8T (49) LVI
50	—	—	—	Not Occupied	—	—
(51) 51	(51) 0.5	(51) VT / YE	(51) 5985	(51) Accessory Wake-Up Serial Data	(51) II	(51) —
52	—	—	—	Not Occupied	—	—
(53) 53	(53) 0.5	(53) BU	(53) 2500	(53) High Speed GMLAN Serial Data [+] 1	(53) II	(53) —
(54) 54	(54) 0.5	(54) WH	(54) 2501	(54) High Speed GMLAN Serial Data [-] 1	(54) II	(54) —
55 - 62	—	—	—	Not Occupied	—	—
(63) 63	(63) 0.5	(63) BN / WH	(63) 585	(63) Transmission Fluid Temperature Sensor Signal	(63) II	(63) —
(64) 64	(64) 0.5	(64) BU / WH	(64) 3338	(64) Transmission Internal Mode Switch Mode Control X	(64) II	(64) —
(65) 65	(65) 1.5	(65) BK / WH	(65) 1551	(65) Signal Ground	(65) I	(65) —
(66) 66	(66) 1.5	(66) RD / GN	(66) 1840	(66) Battery Positive Voltage	(66) I	(66) —

K73 Telematics Communication Interface Control Module X1

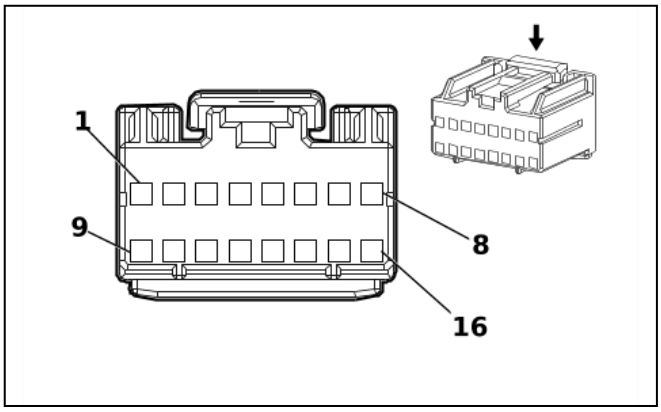

1471689

Connector Part Information

- Harness Type: Instrument Panel Wiring Harness
- OEM Connector: 15431362
- Service Connector: 15306351
- Description: 16-Way F 100A Micro-Pack Series(NA)

Terminal Part Information

Terminal Type ID	Terminated Lead	Diagnostic Test Probe	Terminal Removal Tool
I	13575546	J-35616-16 (L-GN)	J-38125-559
II	13575548	J-35616-16 (L-GN)	J-38125-559

K73 Telematics Communication Interface Control Module X1

Pin	Size	Color	Circuit	Function	Terminal Type ID	Option
(1) 1	(1) 0.5	(1) GN	(1) 5060	(1) Low Speed GMLAN Serial Data	(1) I	(1) —
(2) 2	(2) 0.75	(2) BN / WH	(2) 2517	(2) Telematics Switch Red LED Indicator Control	(2) II	(2) —
(3) 3	(3) 0.75	(3) YE / BK	(3) 2516	(3) Telematics Switch Green LED Indicator Control	(3) II	(3) —
4 - 5	—	—	—	Not Occupied	—	—
(6) 6	(6) 0.75	(6) GN / BK	(6) 2515	(6) Telematics Switch Supply Voltage	(6) II	(6) —
(7) 7	(7) 0.75	(7) BK / WH	(7) 351	(7) Signal Ground	(7) II	(7) —
8 - 9	—	—	—	Not Occupied	—	—
(10) 10	(10) 0.5	(10) BU	(10) 2500	(10) High Speed GMLAN Serial Data [+] 1	(10) I	(10) —
(11) 11	(11) 0.75	(11) GN / WH	(11) 2514	(11) Telematics Switch Signal	(11) II	(11) —
(12) 12	(12) 0.5	(12) WH	(12) 2501	(12) High Speed GMLAN Serial Data [-] 1	(12) I	(12) —
13 - 14	—	—	—	Not Occupied	—	—
(15) 15	(15) 0.75	(15) RD / WH	(15) 3240	(15) Battery Positive Voltage	(15) II	(15) —
16	—	—	—	Not Occupied	—	—

K73 Telematics Communication Interface Control Module X2

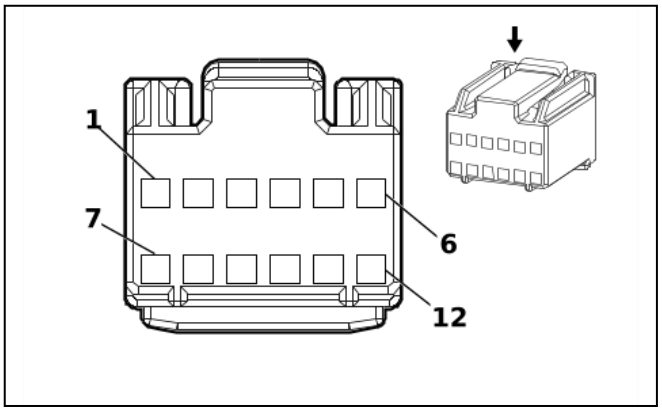

1471691

Connector Part Information
- Harness Type: Instrument Panel Wiring Harness
- OEM Connector: 15431365
- Service Connector: 88952886
- Description: 12-Way F 100A Micro-Pack Series(NA)

Terminal Part Information

Terminal Type ID	Terminated Lead	Diagnostic Test Probe	Terminal Removal Tool
I	13578873	J-35616-64B (L-BU)	J-38125-559

K73 Telematics Communication Interface Control Module X2

Pin	Size	Color	Circuit	Function	Terminal Type ID	Option
(1) 1	(1) 0.75	(1) BU	(1) 658	(1) Cellular Telephone Voice Signal	(1) I	(1) —
(2) 2	(2) 0.75	(2) BU / BK	(2) 659	(2) Cellular Telephone Voice Low Reference	(2) I	(2) —
(3) 3	(3) 0.5	(3) BU	(3) 2500	(3) High Speed GMLAN Serial Data [+] 1	(3) I	(3) —
(4) 4	(4) 0.5	(4) WH	(4) 2501	(4) High Speed GMLAN Serial Data [-] 1	(4) I	(4) —
5 - 7	—	—	—	Not Occupied	—	—
(8) 8	(8) 0.75	(8) BARE	(8) 1792	(8) Low Reference	(8) I	(8) —
(9) 9	(9) 0.75	(9) GY	(9) 655	(9) Cellular Telephone Microphone Signal	(9) I	(9) —
(10) 10	(10) 0.75	(10) GN	(10) 654	(10) Cellular Telephone Microphone Low Reference	(10) I	(10) —
11 - 12	—	—	—	Not Occupied	—	—

K73 Telematics Communication Interface Control Module X3

—

Connector Part Information
- Harness Type: Rear Window Defogger Wiring Harness
- OEM Connector: Not Available
- Service Connector: Service by Harness - See Part Catalog
- Description: 1-Way

Terminal Part Information

Terminal Type ID	Terminated Lead	Diagnostic Test Probe	Terminal Removal Tool
I	Not required	No Tool Required	No Tool Required

K73 Telematics Communication Interface Control Module X3

Pin	Size	Color	Circuit	Function	Terminal Type ID	Option
VT	—	—	Coax Cable	Coax Cable	I	—

K73 Telematics Communication Interface Control Module X4

—

Connector Part Information
- Harness Type: Rear Window Defogger Wiring Harness
- OEM Connector: Not Available
- Service Connector: Service by Harness - See Part Catalog
- Description: 1-Way

Terminal Part Information

Terminal Type ID	Terminated Lead	Diagnostic Test Probe	Terminal Removal Tool
I	Not required	No Tool Required	No Tool Required

K73 Telematics Communication Interface Control Module X4

Pin	Size	Color	Circuit	Function	Terminal Type ID	Option
VT	—	—	Coax Cable	Coax Cable	I	—

K77 Remote Control Door Lock Receiver

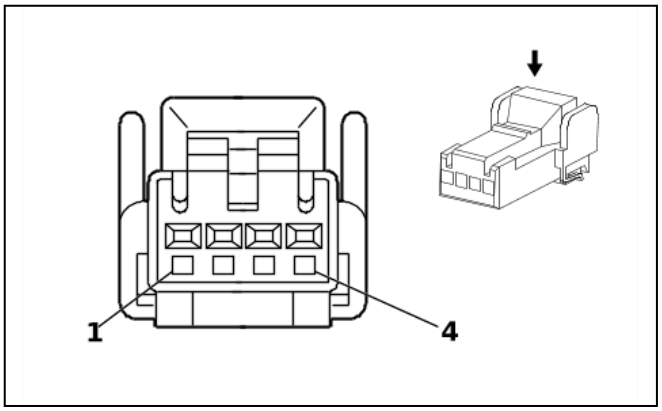

1673483

Connector Part Information
- Harness Type: Instrument Panel Wiring Harness
- OEM Connector: IL-AG5-4S-S3C1
- Service Connector: 13585474
- Description: 4-Way F IL-AG5 Series(GN)

Terminal Part Information

Terminal Type ID	Terminated Lead	Diagnostic Test Probe	Terminal Removal Tool
I	Not required	J-35616-64B (L-BU)	No Tool Required

K77 Remote Control Door Lock Receiver

Pin	Size	Color	Circuit	Function	Terminal Type ID	Option
(1) 1	(1) 0.5	(1) RD / WH	(1) 5340	(1) Battery Positive Voltage	(1) I	(1) —
(2) 2	(2) 0.35	(2) GN	(2) 5060	(2) Low Speed GMLAN Serial Data	(2) I	(2) —
3	—	—	—	Not Occupied	—	—
(4) 4	(4) 0.35	(4) BK / WH	(4) 351	(4) Signal Ground	(4) I	(4) —

K111 Fuel Pump Driver Control Module

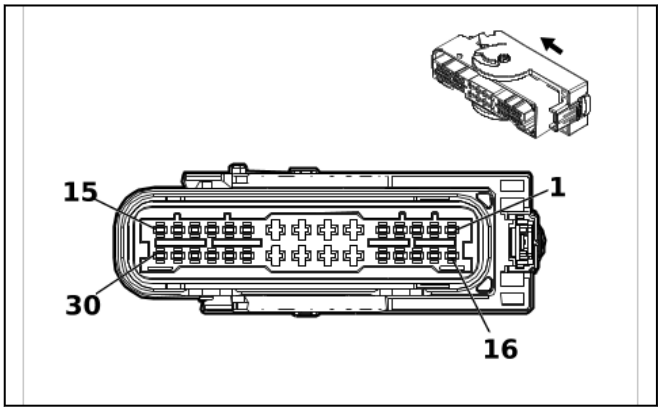

3240109

Connector Part Information

- Harness Type: Chassis Wiring Harness
- OEM Connector: 5-2109446-7
- Service Connector: 86545828
- Description: 30-Way F 1.5, 2.8 MCP Series, Sealed(BK)

Terminal Part Information

Terminal Type ID	Terminated Lead	Diagnostic Test Probe	Terminal Removal Tool
I	19329958	J-35616-2A (GY)	J-38125-217
II	19371214	J-35616-35 (VT)	J-38125-556

K111 Fuel Pump Driver Control Module

Pin	Size	Color	Circuit	Function	Terminal Type ID	Option
1 - 6	—	—	—	Not Occupied	—	—
(7) 7	(7) 2.5	(7) RD / VT	(7) 1940	(7) Battery Positive Voltage	(7) II	(7) —
(8) 8	(8) 2.5	(8) GY	(8) 120	(8) Fuel Pump Control	(8) II	(8) —
(9) 9	(9) 2.5	(9) YE / GY	(9) 4137	(9) Fuel Pump Supply Voltage Phase 2	(9) II	(9) —

Pin	Size	Color	Circuit	Function	Terminal Type ID	Option
(10) 10	(10) 0.5	(10) YE / RD	(10) 2709	(10) Fuel Tank Pressure Sensor 5V Reference	(10) I	(10) —
(11) 11	(11) 0.5	(11) BU / WH	(11) 890	(11) Fuel Tank Pressure Sensor Signal	(11) I	(11) —
(12) 12	(12) 0.5	(12) BN / RD	(12) 7445	(12) Fuel Line Pressure Sensor 5V Reference	(12) I	(12) —
(13) 13	(13) 0.5	(13) BU / VT	(13) 1589	(13) Primary Fuel Level Sensor Signal	(13) I	(13) —
14	—	—	—	Not Occupied	—	—
(15) 15	(15) 0.5	(15) WH	(15) 4499	(15) High Speed GMLAN Serial Data [-] 7	(15) I	(15) —
(16) 16	(16) 0.5	(16) VT / GN	(16) 4320	(16) Powertrain Sensor Bus Enable	(16) I	(16) —
(17) 17	(17) 0.5	(17) VT	(17) 2739	(17) Run/Crank Ignition 1 Voltage	(17) I	(17) —
(18) 18	(18) 0.5	(18) GN / GY	(18) 465	(18) Fuel Pump Primary Relay Control	(18) I	(18) —
19 - 20	—	—	—	Not Occupied	—	—
(21) 21	(21) 0.5	(21) WH	(21) 1310	(21) EVAP Vent Solenoid Valve Control	(21) II	(21) —
(22) 22	(22) 2.5	(22) BK	(22) 2150	(22) Ground	(22) II	(22) —
(23) 23	(23) 0.5	(23) BK	(23) 7444	(23) Fuel Pump Assembly Shield Ground	(23) II	(23) —
(24) 24	(24) 2.5	(24) WH / BN	(24) 4138	(24) Fuel Pump Supply Voltage Phase 3	(24) II	(24) —
(25) 25	(25) 0.5	(25) BK / BN	(25) 6284	(25) Fuel Tank Pressure Sensor Low Reference	(25) I	(25) —
(26) 26	(26) 0.5	(26) BU / WH	(26) 7446	(26) Fuel Pressure Sensor Signal	(26) I	(26) —
(27) 27	(27) 0.5	(27) BK / YE	(27) 7447	(27) Fuel Pressure Sensor Low Reference	(27) I	(27) —
(28) 28	(28) 0.5	(28) BK / GN	(28) 6281	(28) Fuel Level Sensor Low Reference	(28) I	(28) —
29	—	—	—	Not Occupied	—	—
(30) 30	(30) 0.5	(30) BU / BN	(30) 4498	(30) High Speed GMLAN Serial Data [+] 7	(30) I	(30) —

K182 Parking Assist Control Module X1

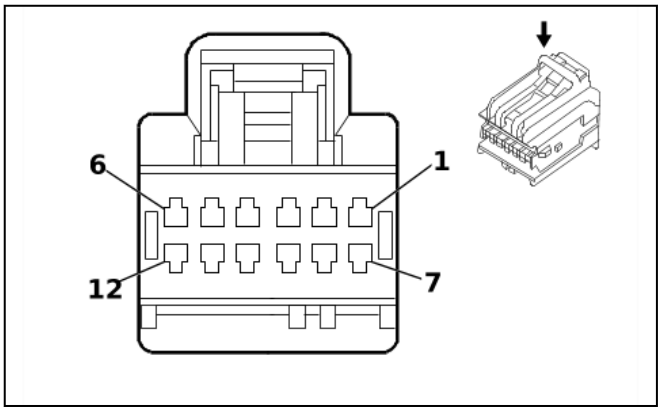

1664569

Connector Part Information

- Harness Type: Instrument Panel Wiring Harness
- OEM Connector: 13784026
- Service Connector: 13525987
- Description: 12-Way F 0.64 Series(BK)

Terminal Part Information

Terminal Type ID	Terminated Lead	Diagnostic Test Probe	Terminal Removal Tool
I	13575549	J-35616-64B (L-BU)	J-38125-559

K182 Parking Assist Control Module X1

Pin	Size	Color	Circuit	Function	Terminal Type ID	Option
(1) 1	(1) 0.5	(1) RD / WH	(1) 840	(1) Battery Positive Voltage	(1) I	(1) —
2 - 5	—	—	—	Not Occupied	—	—
(6) 6	(6) 0.35	(6) GN	(6) 5060	(6) Low Speed GMLAN Serial Data	(6) I	(6) —
(7) 7	(7) 0.5	(7) BK / WH	(7) 351	(7) Signal Ground	(7) I	(7) —
8 - 12	—	—	—	Not Occupied	—	—

K182 Parking Assist Control Module X2

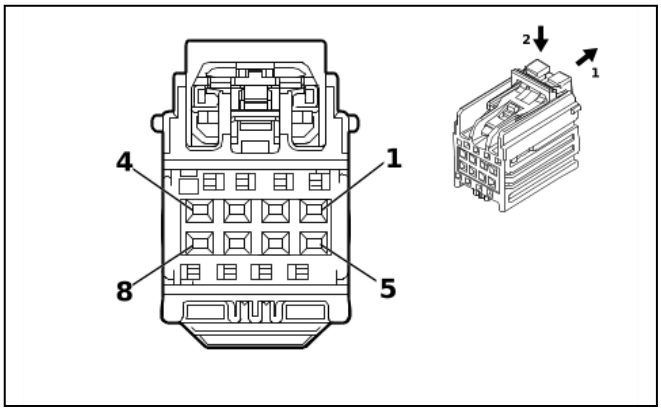

4280711

Connector Part Information

- Harness Type: Instrument Panel Wiring Harness
- OEM Connector: 7289-2895-40
- Service Connector: 19355209
- Description: 8-Way F 0.64 Kaizen Series(GY)

Terminal Part Information

Terminal Type ID	Terminated Lead	Diagnostic Test Probe	Terminal Removal Tool
I	Not required	J-35616-64B (L-BU)	No Tool Required

K182 Parking Assist Control Module X2

Pin	Size	Color	Circuit	Function	Terminal Type ID	Option
(1) 1	(1) 0.5	(1) YE / VT	(1) 2378	(1) Right Rear Outer Parking Assist Sensor Signal	(1) I	(1) —
(2) 2	(2) 0.5	(2) YE / WH	(2) 2377	(2) Right Rear Middle Parking Assist Sensor Signal	(2) I	(2) —
(3) 3	(3) 0.5	(3) YE / BU	(3) 2376	(3) Left Rear Middle Parking Assist Sensor Signal	(3) I	(3) —
(4) 4	(4) 0.5	(4) BN / WH	(4) 2374	(4) Object Sensor Voltage Reference	(4) I	(4) —
(5) 5	(5) 0.5	(5) YE	(5) 2375	(5) Left Rear Outer Parking Assist Sensor Signal	(5) I	(5) —
6 - 7	—	—	—	Not Occupied	—	—
(8) 8	(8) 0.5	(8) BK / GY	(8) 2379	(8) Object Sensor Low Reference	(8) I	(8) —

KR32B Blower Motor High Speed Relay - Auxiliary

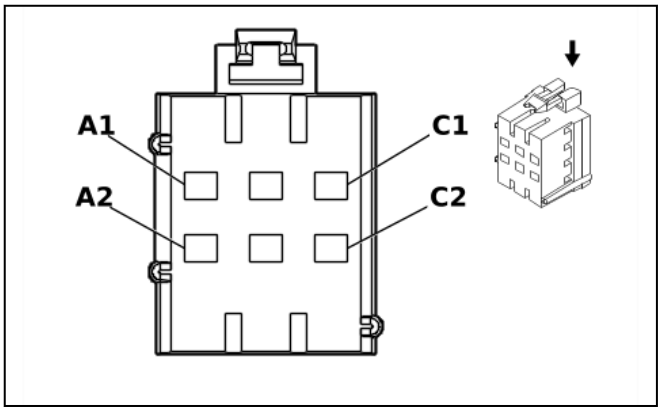

309518

Connector Part Information

- Harness Type: Auxiliary Heater and Air Conditioning Wiring Harness
- OEM Connector: 12129715
- Service Connector: Service by Harness - See Part Catalog
- Description: 6-Way F 280 Metri-Pack Flexlock Series(GY)

Terminal Part Information

Terminal Type ID	Terminated Lead	Diagnostic Test Probe	Terminal Removal Tool
I	Not required	J-35616-4A (PU)	No Tool Required

KR32B Blower Motor High Speed Relay - Auxiliary

Pin	Size	Color	Circuit	Function	Terminal Type ID	Option
A1	0.35	WH	1924	Auxiliary Blower Motor High Speed Control	I	—
A2	5	YE	1172	Auxiliary Blower Motor Control	I	—
B1 - B2	—	—	—	Not Occupied	—	—
C1	5	RD / WH	1740	Battery Positive Voltage	I	—
C2	0.35	BN	341	Run Ignition 3 Voltage	I	—

KR32C Blower Motor Low Speed Relay - Auxiliary

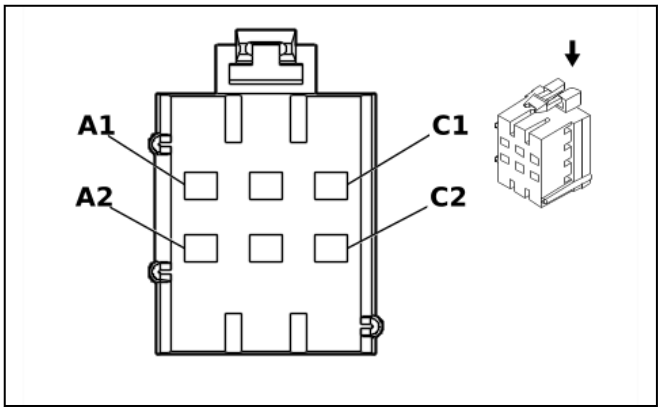

309518

Connector Part Information

- Harness Type: Auxiliary Heater and Air Conditioning Wiring Harness
- OEM Connector: 12129715
- Service Connector: Service by Harness - See Part Catalog
- Description: 6-Way F 280 Metri-Pack Flexlock Series(GY)

Terminal Part Information

Terminal Type ID	Terminated Lead	Diagnostic Test Probe	Terminal Removal Tool
I	Not required	J-35616-4A (PU)	No Tool Required

KR32C Blower Motor Low Speed Relay - Auxiliary

Pin	Size	Color	Circuit	Function	Terminal Type ID	Option
A1	0.35	BU	1926	Auxiliary Blower Motor Low Speed Control 2	I	—
A2	3	YE	1176	Auxiliary Blower Motor Low Speed Control	I	—
B1 - B2	—	—	—	Not Occupied	—	—
C1	5	RD / WH	1740	Battery Positive Voltage	I	—
C2	0.35	BN	341	Run Ignition 3 Voltage	I	—

KR32D Blower Motor Medium Speed Relay - Auxiliary

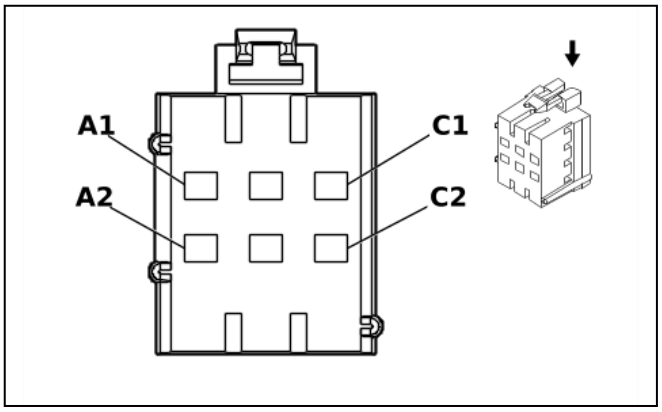

309518

Connector Part Information

- Harness Type: Auxiliary Heater and Air Conditioning Wiring Harness
- OEM Connector: 12129715
- Service Connector: Service by Harness - See Part Catalog
- Description: 6-Way F 280 Metri-Pack Flexlock Series(GY)

Terminal Part Information

Terminal Type ID	Terminated Lead	Diagnostic Test Probe	Terminal Removal Tool
I	Not required	J-35616-4A (PU)	No Tool Required

KR32D Blower Motor Medium Speed Relay - Auxiliary

Pin	Size	Color	Circuit	Function	Terminal Type ID	Option
A1	0.35	OG	1925	Auxiliary Blower Motor Medium Speed Control 2	I	—
A2	3	BU	1072	Auxiliary Blower Motor Medium Speed Control	I	—
B1 - B2	—	—	—	Not Occupied	—	—
C1	5	RD / WH	1740	Battery Positive Voltage	I	—
C2	0.35	BN	341	Run Ignition 3 Voltage	I	—

KR81 Auxiliary Battery Relay 1 X1

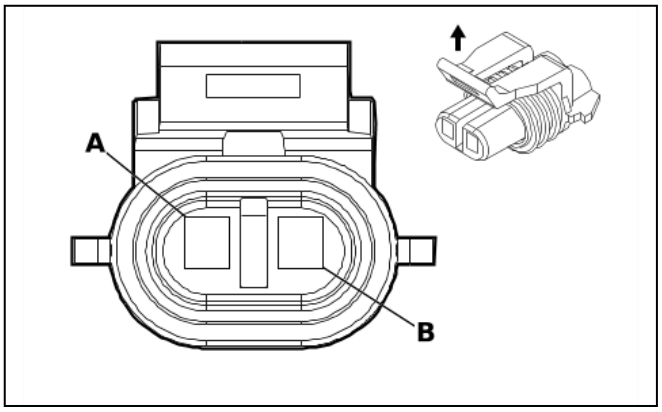

635009

Connector Part Information
- Harness Type: Engine Wiring Harness
- OEM Connector: 12052641
- Service Connector: 13586114
- Description: 2-Way F 150 Metri-Pack Series, Sealed(BK)

Terminal Part Information

Terminal Type ID	Terminated Lead	Diagnostic Test Probe	Terminal Removal Tool
I	Not required	J-35616-14 (GN)	No Tool Required

KR81 Auxiliary Battery Relay 1 X1

Pin	Size	Color	Circuit	Function	Terminal Type ID	Option
A	0.5	RD / WH	4892	Auxiliary Battery Relay Control	I	—
B	0.75	BK / WH	1551	Signal Ground	I	—

KR81 Auxiliary Battery Relay 1 X2

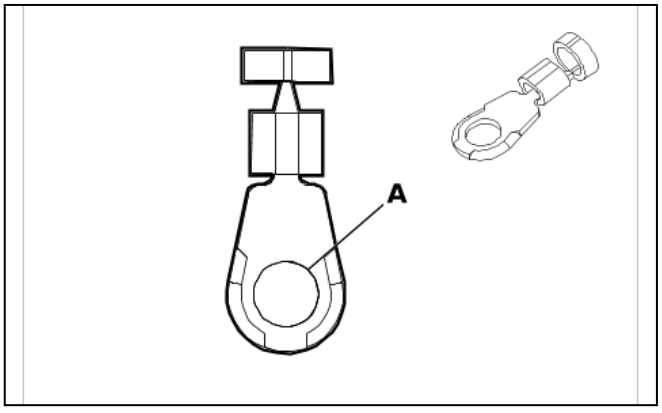

3385519

Connector Part Information
- Harness Type: Battery Positive Cable
- OEM Connector: 12146365
- Service Connector: Service by Cable Assembly — See Part Catalog
- Description: 1-Way Ring Terminal

Terminal Part Information

Terminal Type ID	Terminated Lead	Diagnostic Test Probe	Terminal Removal Tool
I	Not required	No Tool Required	No Tool Required

KR81 Auxiliary Battery Relay 1 X2

Pin	Size	Color	Circuit	Function	Terminal Type ID	Option
A	13	RD	1	Unfused Battery Positive Voltage	I	—

KR81 Auxiliary Battery Relay 1 X3 (- 9LV)

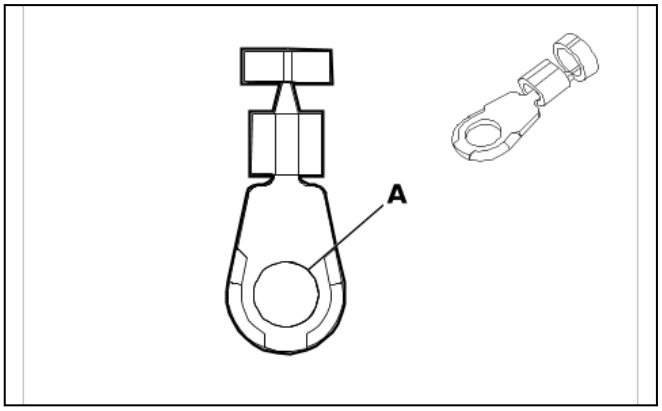

3385519

Connector Part Information

- Harness Type: Auxiliary Battery Positive Cable
- OEM Connector: 12146365
- Service Connector: Service by Cable Assembly — See Part Catalog
- Description: 1-Way Ring Terminal

Terminal Part Information

Terminal Type ID	Terminated Lead	Diagnostic Test Probe	Terminal Removal Tool
I	Not required	No Tool Required	No Tool Required

KR81 Auxiliary Battery Relay 1 X3 (- 9LV)

Pin	Size	Color	Circuit	Function	Terminal Type ID	Option
A	13	RD	1	Unfused Battery Positive Voltage	I	—

KR81 Auxiliary Battery Relay 1 X3 (9LV)

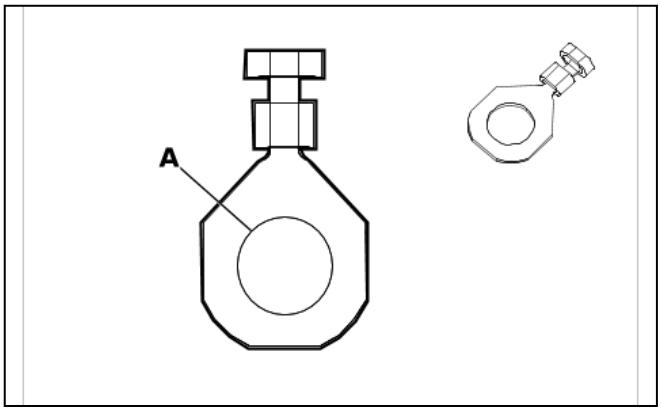

3240148

Connector Part Information
- Harness Type: Accessory Wiring Harness
- OEM Connector: 12103504
- Service Connector: Service by Cable Assembly — See Part Catalog
- Description: 1-Way Ring Terminal

Terminal Part Information

Terminal Type ID	Terminated Lead	Diagnostic Test Probe	Terminal Removal Tool
I	Not required	No Tool Required	No Tool Required

KR81 Auxiliary Battery Relay 1 X3 (9LV)

Pin	Size	Color	Circuit	Function	Terminal Type ID	Option
A	5	RD	102	Battery Positive Voltage	I	—

M6 Air Temperature Door Actuator

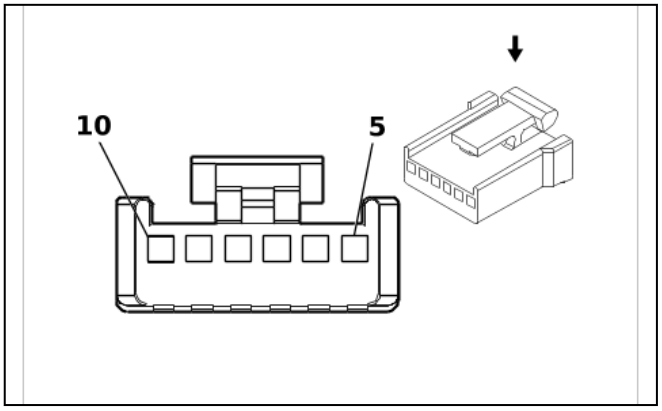

281207

Connector Part Information
- Harness Type: Instrument Panel Wiring Harness
- OEM Connector: 12040953
- Service Connector: 12102632
- Description: 6-Way F 100 Micro-Pack Series(BK)

Terminal Part Information

Terminal Type ID	Terminated Lead	Diagnostic Test Probe	Terminal Removal Tool
I	Not required	J-35616-6 (BN)	No Tool Required

M6 Air Temperature Door Actuator

Pin	Size	Color	Circuit	Function	Terminal Type ID	Option
5 - 6	—	—	—	Not Occupied	—	—
(7) 7	(7) 1	(7) BK	(7) 550	(7) Ground	(7) I	(7) —
(8) 8	(8) 0.75	(8) BU	(8) 733	(8) Air Temperature Door Position Signal	(8) I	(8) —
9	—	—	—	Not Occupied	—	—
(10) 10	(10) 0.35	(10) BN	(10) 341	(10) Run Ignition 3 Voltage	(10) I	(10) —

M6B Air Temperature Door Actuator - Auxiliary

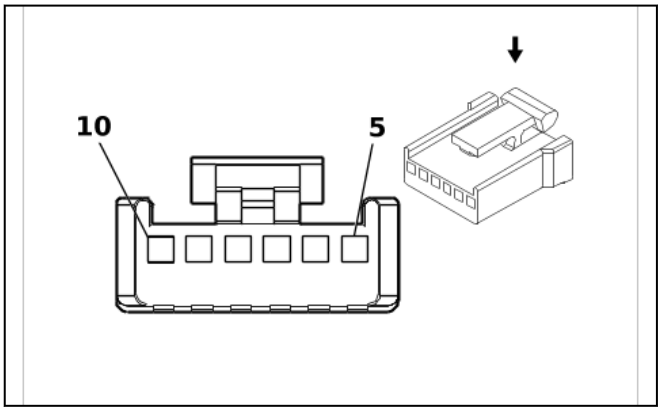

281207

Connector Part Information

- Harness Type: Auxiliary Heater and Air Conditioning Wiring Harness
- OEM Connector: 12040953
- Service Connector: Service by Harness - See Part Catalog
- Description: 6-Way F 100 Micro-Pack Series(BK)

Terminal Part Information

Terminal Type ID	Terminated Lead	Diagnostic Test Probe	Terminal Removal Tool
I	Not required	J-35616-6 (BN)	No Tool Required

M6B Air Temperature Door Actuator - Auxiliary

Pin	Size	Color	Circuit	Function	Terminal Type ID	Option
5 - 6	—	—	—	Not Occupied	—	—
(7) 7	(7) 0.35	(7) BK	(7) 850	(7) Ground	(7) I	(7) —
(8) 8	(8) 0.35	(8) OG	(8) 2775	(8) Rear Air Temperature Door Actuator Control	(8) I	(8) —
9	—	—	—	Not Occupied	—	—
(10) 10	(10) 0.35	(10) BN	(10) 341	(10) Run Ignition 3 Voltage	(10) I	(10) —

M7 Transmission Shift Lock Control Solenoid Actuator

—

Connector Part Information
- Harness Type: Rear Window Defogger Wiring Harness
- OEM Connector: Not Available
- Service Connector: Service by Harness - See Part Catalog
- Description: 2-Way

Terminal Part Information

Terminal Type ID	Terminated Lead	Diagnostic Test Probe	Terminal Removal Tool
I	Not required	No Tool Required	No Tool Required

M7 Transmission Shift Lock Control Solenoid Actuator

Pin	Size	Color	Circuit	Function	Terminal Type ID	Option
A	—	TN / WH	816	Brake Transmission Shift Interlock Solenoid Actuator Control	I	—
B	—	BK	350	Ground	I	—

M8 Blower Motor

—

Connector Part Information
- Harness Type: Rear Window Defogger Wiring Harness
- OEM Connector: Not Available
- Service Connector: Service by Harness - See Part Catalog
- Description: 2-Way

Terminal Part Information

Terminal Type ID	Terminated Lead	Diagnostic Test Probe	Terminal Removal Tool
I	Not required	No Tool Required	No Tool Required

M8 Blower Motor

Pin	Size	Color	Circuit	Function	Terminal Type ID	Option
A	—	BK	1250	Ground	I	—
B	—	RD	65	Blower Motor Control	I	—

M8B Blower Motor - Auxiliary

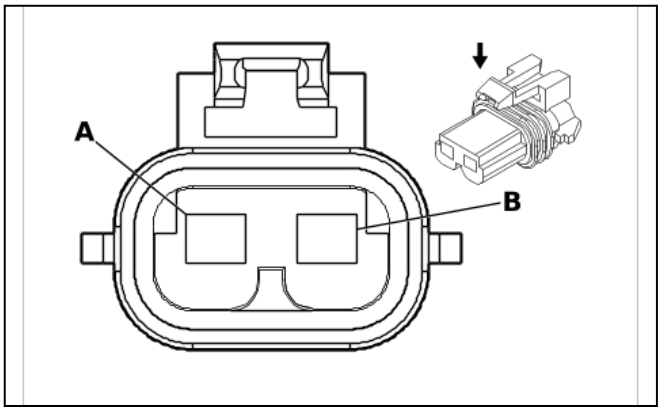

684799

Connector Part Information
- Harness Type: Auxiliary Heater and Air Conditioning Wiring Harness
- OEM Connector: 12077900
- Service Connector: Service by Harness - See Part Catalog
- Description: 2-Way F 280 Metri-Pack Series, Sealed(BK)

Terminal Part Information

Terminal Type ID	Terminated Lead	Diagnostic Test Probe	Terminal Removal Tool
I	Not required	J-35616-4A (PU)	No Tool Required

M8B Blower Motor - Auxiliary

Pin	Size	Color	Circuit	Function	Terminal Type ID	Option
A	5	BK	850	Ground	I	—
B	5	YE	1172	Auxiliary Blower Motor Control	I	—

M13 Door Latch Assembly - Rear Cargo X1

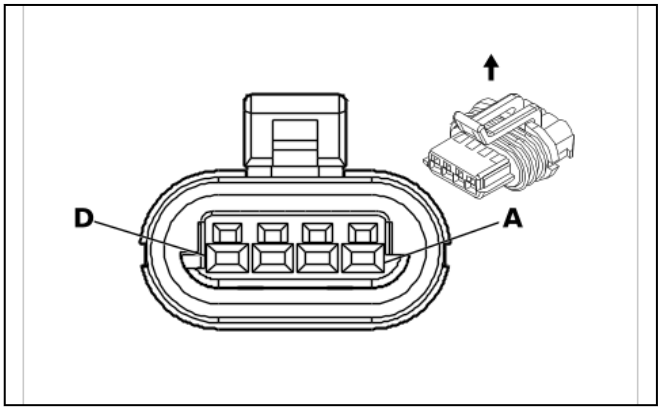

655858

Connector Part Information
- Harness Type: Rear Door Door Wiring Harness
- OEM Connector: 15336846
- Service Connector: Service by Harness - See Part Catalog
- Description: 4-Way F 150 GT Series, Sealed(BU)

Terminal Part Information

Terminal Type ID	Terminated Lead	Diagnostic Test Probe	Terminal Removal Tool
I	Not required	J-35616-14 (GN)	No Tool Required

M13 Door Latch Assembly - Rear Cargo X1

Pin	Size	Color	Circuit	Function	Terminal Type ID	Option
A	0.35	BK / WH	1051	Signal Ground	I	—
B	—	—	—	Not Occupied	—	—
C	0.35	PK / BK	1303	Liftgate Ajar Switch Signal 1	I	—
D	0.35	GN	5926	Rear Body Opening Open Switch Signal	I	—

M13 Door Latch Assembly - Rear Cargo X2

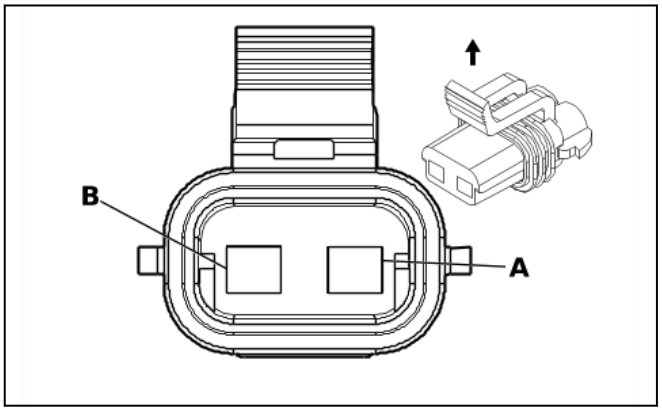

68721

Connector Part Information

- Harness Type: Rear Door Door Wiring Harness
- OEM Connector: 15300027
- Service Connector: Service by Harness - See Part Catalog
- Description: 2-Way F 280 Metri-Pack Series, Sealed(BK)

Terminal Part Information

Terminal Type ID	Terminated Lead	Diagnostic Test Probe	Terminal Removal Tool
I	Not required	J-35616-4A (PU)	No Tool Required

M13 Door Latch Assembly - Rear Cargo X2

Pin	Size	Color	Circuit	Function	Terminal Type ID	Option
A	1	TN / BK	1095	Right Rear Door Lock Actuator Unlock Control	I	—
B	1	GY	295	Door Lock Actuator Lock Control	I	—

M14RR Door Lock Actuator - Right Rear (E24)

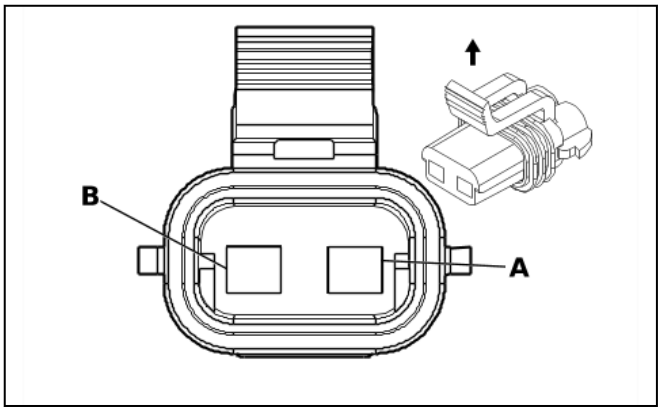

68721

Connector Part Information
- Harness Type: Rear Side Door Wiring Harness
- OEM Connector: 15300027
- Service Connector: Service by Harness - See Part Catalog
- Description: 2-Way F 280 Metri-Pack Series, Sealed(BK)

Terminal Part Information

Terminal Type ID	Terminated Lead	Diagnostic Test Probe	Terminal Removal Tool
I	Not required	J-35616-4A (PU)	No Tool Required

M14RR Door Lock Actuator - Right Rear (E24)

Pin	Size	Color	Circuit	Function	Terminal Type ID	Option
A	0.75	TN	294	Door Lock Actuator Unlock Control	I	—
B	0.75	GY	295	Door Lock Actuator Lock Control	I	—

M14RR Door Lock Actuator - Right Rear (YA2)

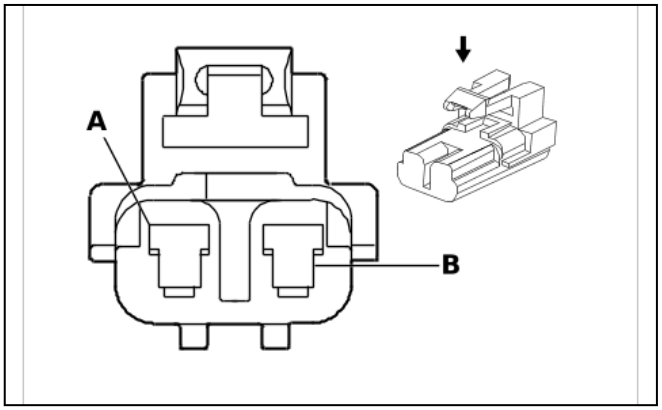

62488

Connector Part Information
- Harness Type: Rear Side Door Wiring Harness
- OEM Connector: 12084957
- Service Connector: Service by Harness - See Part Catalog
- Description: 2-Way F 280 Metri-Pack Series(BK)

Terminal Part Information

Terminal Type ID	Terminated Lead	Diagnostic Test Probe	Terminal Removal Tool
I	Not required	J-35616-4A (PU)	No Tool Required

M14RR Door Lock Actuator - Right Rear (YA2)

Pin	Size	Color	Circuit	Function	Terminal Type ID	Option
A	0.75	GY	295	Door Lock Actuator Lock Control	I	—
B	0.75	TN	294	Door Lock Actuator Unlock Control	I	—

M37B Mode Door Actuator - Auxiliary

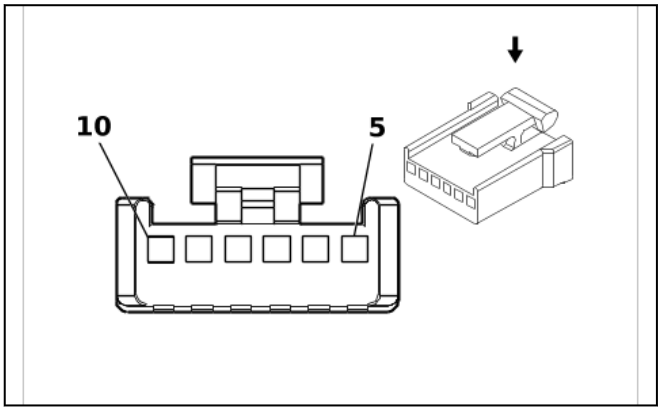

281207

Connector Part Information

- Harness Type: Auxiliary Heater and Air Conditioning Wiring Harness
- OEM Connector: 12040953
- Service Connector: Service by Harness - See Part Catalog
- Description: 6-Way F 100 Micro-Pack Series(BK)

Terminal Part Information

Terminal Type ID	Terminated Lead	Diagnostic Test Probe	Terminal Removal Tool
I	Not required	J-35616-6 (BN)	No Tool Required

M37B Mode Door Actuator - Auxiliary

Pin	Size	Color	Circuit	Function	Terminal Type ID	Option
5 - 6	—	—	—	Not Occupied	—	—
(7) 7	(7) 0.35	(7) BK	(7) 850	(7) Ground	(7) I	(7) —
(8) 8	(8) 0.35	(8) GY	(8) 2599	(8) Rear Mode Door Actuator Signal	(8) I	(8) —
9	—	—	—	Not Occupied	—	—
(10) 10	(10) 0.35	(10) BN	(10) 341	(10) Run Ignition 3 Voltage	(10) I	(10) —

M49D Seat Motor Assembly - Driver

—

Connector Part Information
- Harness Type: Rear Window Defogger Wiring Harness
- OEM Connector: Not Available
- Service Connector: Service by Harness - See Part Catalog
- Description: 6-Way

Terminal Part Information

Terminal Type ID	Terminated Lead	Diagnostic Test Probe	Terminal Removal Tool
I	Not required	No Tool Required	No Tool Required

M49D Seat Motor Assembly - Driver

Pin	Size	Color	Circuit	Function	Terminal Type ID	Option
A	—	YE	282	Driver Seat Rear Vertical Motor Up Control	I	—
B	—	BU	283	Driver Seat Rear Vertical Motor Down Control	I	—
C	—	TN	285	Driver Seat Horizontal Motor Forward Control	I	—
D	—	GN	284	Driver Seat Horizontal Motor Rearward Control	I	—
E	—	GN	286	Driver Seat Front Vertical Motor Up Control	I	—
F	—	BU	287	Driver Seat Front Vertical Motor Down Control	I	—

M49P Seat Motor Assembly - Passenger

—

Connector Part Information
- Harness Type: Rear Window Defogger Wiring Harness
- OEM Connector: Not Available
- Service Connector: Service by Harness - See Part Catalog
- Description: 6-Way

Terminal Part Information

Terminal Type ID	Terminated Lead	Diagnostic Test Probe	Terminal Removal Tool
I	Not required	No Tool Required	No Tool Required

M49P Seat Motor Assembly - Passenger

Pin	Size	Color	Circuit	Function	Terminal Type ID	Option
A	—	YE	288	Passenger Seat Rear Vertical Motor Up Control	I	—
B	—	BU	289	Passenger Seat Rear Vertical Motor Down Control	I	—
C	—	TN	296	Passenger Seat Horizontal Motor Forward Control	I	—
D	—	GN	290	Passenger Seat Horizontal Motor Rearward Control	I	—
E	—	GN	297	Passenger Seat Front Vertical Motor Up Control	I	—
F	—	BU	298	Passenger Seat Front Vertical Motor Down Control	I	—

M64 Starter Motor X1 (L8T)

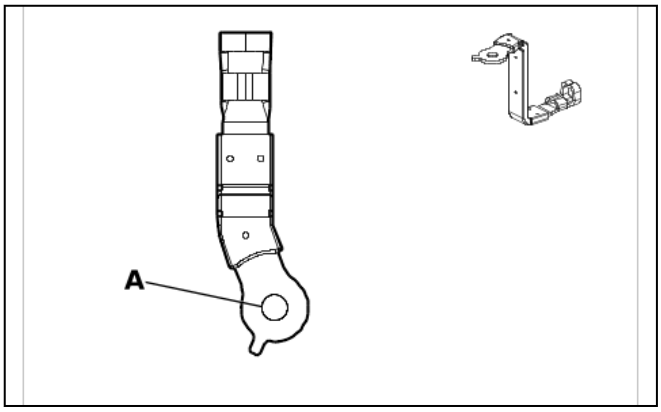

6056268

Connector Part Information
- Harness Type: Battery Positive Cable
- OEM Connector: 35592444
- Service Connector: Service by Cable Assembly — See Part Catalog
- Description: 1-Way Ring Terminal

Terminal Part Information

Terminal Type ID	Terminated Lead	Diagnostic Test Probe	Terminal Removal Tool
I	Not required	No Tool Required	No Tool Required

M64 Starter Motor X1 (L8T)

Pin	Size	Color	Circuit	Function	Terminal Type ID	Option
A	32	RD	1	Unfused Battery Positive Voltage	I	—

M64 Starter Motor X1 (LV1)

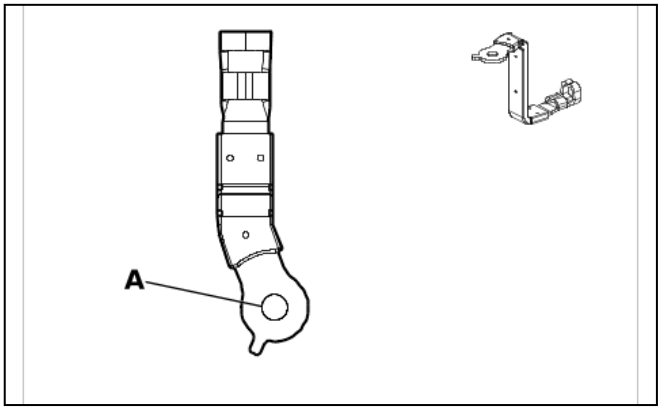

6056268

Connector Part Information
- Harness Type: Battery Positive Cable
- OEM Connector: 35592441
- Service Connector: Service by Cable Assembly — See Part Catalog
- Description: 1-Way Ring Terminal

Terminal Part Information

Terminal Type ID	Terminated Lead	Diagnostic Test Probe	Terminal Removal Tool
I	Not required	No Tool Required	No Tool Required

M64 Starter Motor X1 (LV1)

Pin	Size	Color	Circuit	Function	Terminal Type ID	Option
A	32	RD	1	Unfused Battery Positive Voltage	I	—

M64 Starter Motor X2

—

Connector Part Information
- Harness Type: Rear Window Defogger Wiring Harness
- OEM Connector: Not Available
- Service Connector: Service by Harness - See Part Catalog
- Description: 1-Way

Terminal Part Information

Terminal Type ID	Terminated Lead	Diagnostic Test Probe	Terminal Removal Tool
I	Not required	No Tool Required	No Tool Required

M64 Starter Motor X2

Pin	Size	Color	Circuit	Function	Terminal Type ID	Option
(1) 1	(1) —	(1) YE	(1) 6	(1) Starter Solenoid Crank Ignition Voltage	(1) I	(1) —

M74D Window Motor - Driver

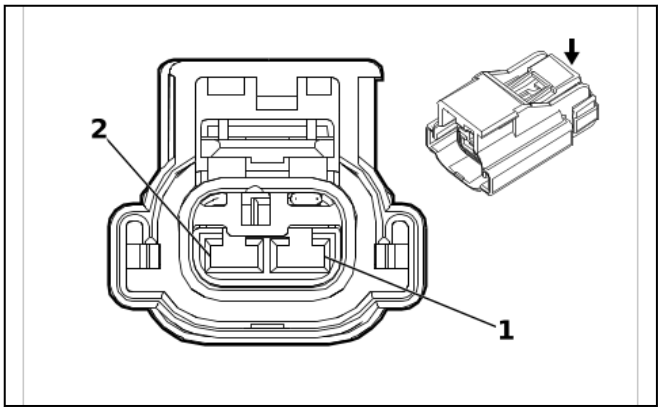

3372003

Connector Part Information
- Harness Type: Front Side Door Door Wiring Harness - Driver
- OEM Connector: 13896059
- Service Connector: Service by Harness - See Part Catalog
- Description: 2-Way F 2.8 APEX Series, Sealed(BK)

Terminal Part Information

Terminal Type ID	Terminated Lead	Diagnostic Test Probe	Terminal Removal Tool
I	Not required	J-35616-35 (VT)	No Tool Required

M74D Window Motor - Driver

Pin	Size	Color	Circuit	Function	Terminal Type ID	Option
(1) 1	(1) 3	(1) BU	(1) 164	(1) Left Front Window Motor Up Control	(1) I	(1) —
(2) 2	(2) 3	(2) BN	(2) 165	(2) Left Front Window Motor Down Control	(2) I	(2) —

M74P Window Motor - Passenger

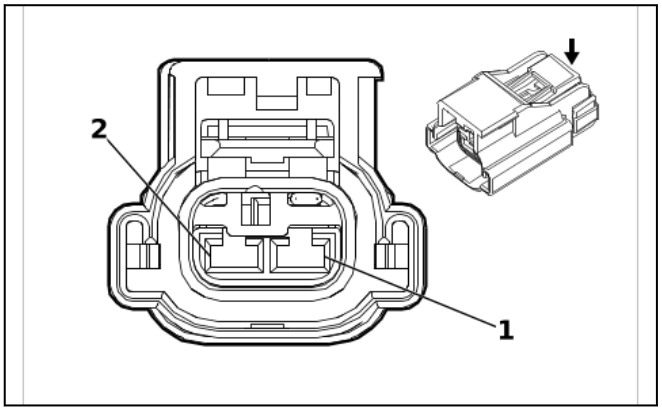

3372003

Connector Part Information

- Harness Type: Front Side Door Door Wiring Harness - Passenger
- OEM Connector: 13896059
- Service Connector: Service by Harness - See Part Catalog
- Description: 2-Way F 2.8 APEX Series, Sealed(BK)

Terminal Part Information

Terminal Type ID	Terminated Lead	Diagnostic Test Probe	Terminal Removal Tool
I	Not required	J-35616-35 (VT)	No Tool Required

M74P Window Motor - Passenger

Pin	Size	Color	Circuit	Function	Terminal Type ID	Option
(1) 1	(1) 3	(1) BU	(1) 666	(1) Right Front Window Motor Up Control	(1) I	(1) —
(2) 2	(2) 3	(2) BN	(2) 667	(2) Right Front Window Motor Down Control	(2) I	(2) —

M75 Windshield Wiper Motor

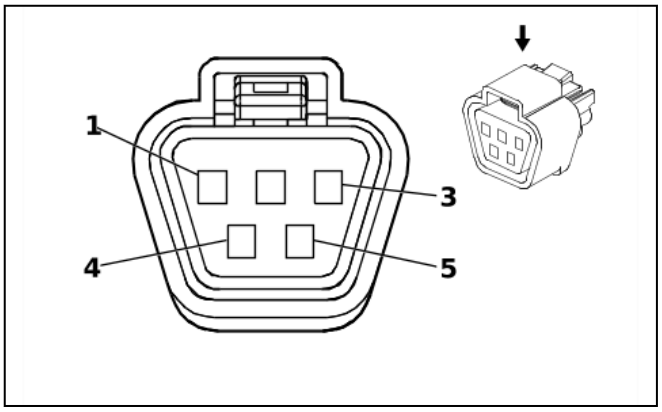

1715213

Connector Part Information

- Harness Type: Instrument Panel Wiring Harness
- OEM Connector: 6189-0587
- Service Connector: 13587179
- Description: 5-Way F 090 Series, Sealed(BK)

Terminal Part Information

Terminal Type ID	Terminated Lead	Diagnostic Test Probe	Terminal Removal Tool
I	Not required	J-35616-14 (GN)	No Tool Required
II	Not required	J-35616-18 (BK)	No Tool Required

M75 Windshield Wiper Motor

Pin	Size	Color	Circuit	Function	Terminal Type ID	Option
(1) 1	(1) 2	(1) GN	(1) 95	(1) Windshield Wiper Motor Low Speed Control	(1) II	(1) —
(2) 2	(2) 0.35	(2) BK / WH	(2) 351	(2) Signal Ground	(2) I	(2) —
(3) 3	(3) 0.35	(3) YE	(3) 196	(3) Windshield Wiper Motor Park Switch Signal	(3) I	(3) —
(4) 4	(4) 2	(4) PU	(4) 92	(4) Windshield Wiper Motor High Speed Control	(4) II	(4) —
(5) 5	(5) 2	(5) BK	(5) 1250	(5) Ground	(5) II	(5) —

P3 Backup Alarm (- UY7)

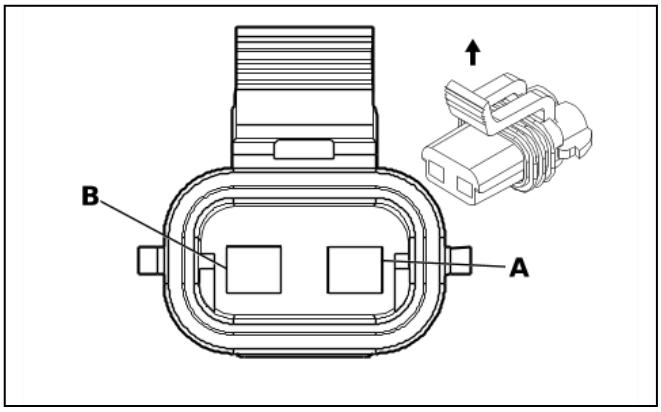

68721

Connector Part Information
- Harness Type: Chassis Wiring Harness
- OEM Connector: 15300027
- Service Connector: 12101855
- Description: 2-Way F 280 Metri-Pack Series, Sealed(BK)

Terminal Part Information

Terminal Type ID	Terminated Lead	Diagnostic Test Probe	Terminal Removal Tool
I	Not required	J-35616-4A (PU)	No Tool Required

P3 Backup Alarm (- UY7)

Pin	Size	Color	Circuit	Function	Terminal Type ID	Option
A	1	GN	1624	Trailer Backup Lamp Control	I	—
B	1	BK	150	Ground	I	—

P3 Backup Alarm (UY7)

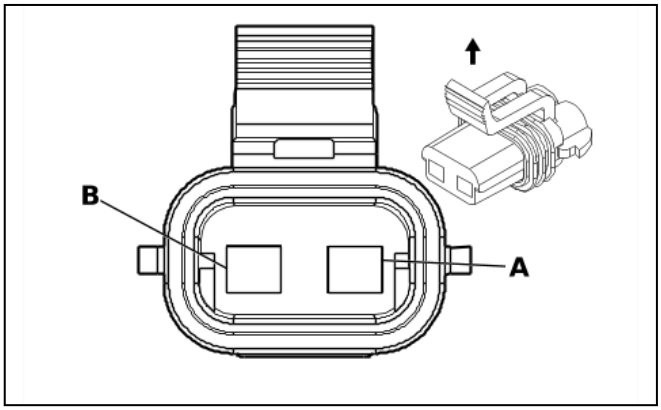

68721

Connector Part Information
- Harness Type: Chassis Rear Wiring Harness Extension Harness
- OEM Connector: 15300027
- Service Connector: Service by Harness - See Part Catalog
- Description: 2-Way F 280 Metri-Pack Series, Sealed(BK)

Terminal Part Information

Terminal Type ID	Terminated Lead	Diagnostic Test Probe	Terminal Removal Tool
I	Not required	J-35616-4A (PU)	No Tool Required

P3 Backup Alarm (UY7)

Pin	Size	Color	Circuit	Function	Terminal Type ID	Option
A	1	GN	1624	Trailer Backup Lamp Control	I	—
B	1	BK	150	Ground	I	—

P13 Horn Assembly

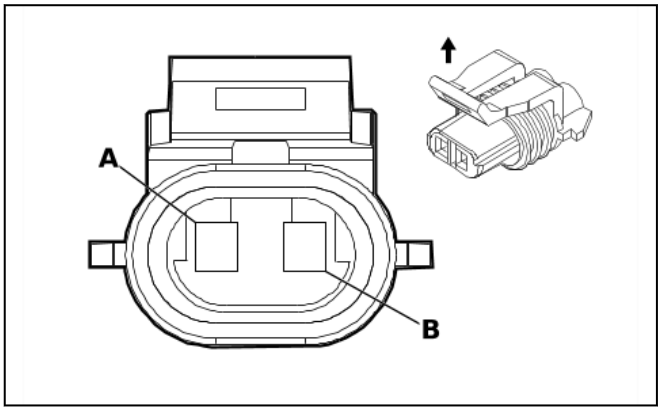

537107

Connector Part Information

- Harness Type: Engine Wiring Harness
- OEM Connector: 12052644
- Service Connector: 19368034
- Description: 2-Way F 150 Metri-Pack Series, Sealed(GY)

Terminal Part Information

Terminal Type ID	Terminated Lead	Diagnostic Test Probe	Terminal Removal Tool
I	Not required	J-35616-14 (GN)	No Tool Required

P13 Horn Assembly

Pin	Size	Color	Circuit	Function	Terminal Type ID	Option
A	1	BK	1250	Ground	I	—
B	1	BN / GY	29	Horn Control	I	—

P16 Instrument Cluster

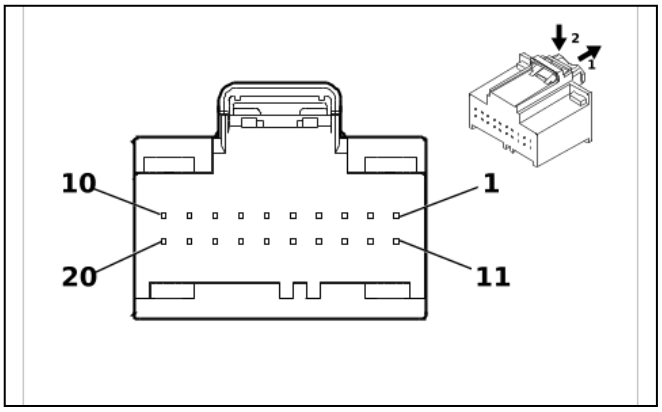

5112891

Connector Part Information

- Harness Type: Instrument Panel Wiring Harness
- OEM Connector: 31410-0205
- Service Connector: 13525990
- Description: 20-Way F 0.64 Series(BK)

Terminal Part Information

Terminal Type ID	Terminated Lead	Diagnostic Test Probe	Terminal Removal Tool
I	13584547	J-35616-64B (L-BU)	J-38125-215A

P16 Instrument Cluster

Pin	Size	Color	Circuit	Function	Terminal Type ID	Option
(1) 1	(1) 0.35	(1) GN	(1) 5060	(1) Low Speed GMLAN Serial Data	(1) I	(1) —
2 - 3	—	—	—	Not Occupied	—	—
(4) 4	(4) 0.5	(4) BN / WH	(4) 419	(4) Check Engine Indicator Control	(4) I	(4) —
5	—	—	—	Not Occupied	—	—
(6) 6	(6) 0.35	(6) GY / YE	(6) 3885	(6) Forward Collision Alert LED Control	(6) I	(6) —
(7) 7	(7) 0.35	(7) BK / WH	(7) 351	(7) Signal Ground	(7) I	(7) —
(8) 8	(8) 0.35	(8) WH / GN	(8) 3535	(8) Reflected LED Display Dimming Control	(8) I	(8) —
9	—	—	—	Not Occupied	—	—
(10) 10	(10) 0.5	(10) BU / GY	(10) 636	(10) Ambient Air Temperature Sensor Signal	(10) I	(10) —
(11) 11	(11) 0.5	(11) BK / BU	(11) 61	(11) Ambient Air Temperature Sensor Low Reference	(11) I	(11) —
(12) 12	(12) 0.35	(12) BU	(12) 2307	(12) Passenger Air Bag On Indicator Control	(12) I	(12) —
(13) 13	(13) 0.35	(13) GN	(13) 2308	(13) Passenger Air Bag Off Indicator Control	(13) I	(13) —
(14) 14	(14) 0.5	(14) TN / WH	(14) 33	(14) Brake Warning Indicator Control	(14) I	(14) —
(15) 15	(15) 0.75	(15) GN / GY	(15) 333	(15) Brake Fluid Level Signal	(15) I	(15) —

Pin	Size	Color	Circuit	Function	Terminal Type ID	Option
(16) 16	(16) 0.35	(16) PK	(16) 893	(16) Driver Information Center Select Menu Switch Signal	(16) I	(16) —
(17) 17	(17) 0.35	(17) GN / WH	(17) 1358	(17) Driver Information Center Switch Signal	(17) I	(17) —
(18) 18	(18) 0.35	(18) BN	(18) 897	(18) Driver Information Center Switch Low Reference	(18) I	(18) —
(19) 19	(19) 0.35	(19) PK	(19) 1639	(19) Run/Crank Ignition 1 Voltage	(19) I	(19) —
(20) 20	(20) 0.35	(20) RD / WH	(20) 2840	(20) Battery Positive Voltage	(20) I	(20) —

P19AG Speaker - Left Front Door

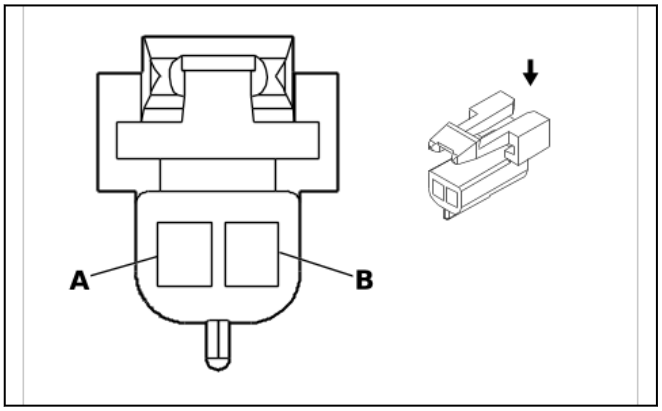

280768

Connector Part Information

- Harness Type: Front Side Door Door Wiring Harness - Driver
- OEM Connector: 12052832
- Service Connector: Service by Harness - See Part Catalog
- Description: 2-Way F 150 Metri-Pack Series(BK)

Terminal Part Information

Terminal Type ID	Terminated Lead	Diagnostic Test Probe	Terminal Removal Tool
I	Not required	J-35616-14 (GN)	No Tool Required

P19AG Speaker - Left Front Door

Pin	Size	Color	Circuit	Function	Terminal Type ID	Option
A	0.75	BU	1957	Left Front Midrange Speaker [-] Control	I	—
B	0.75	BU	1857	Left Front Midrange Speaker [+] Control	I	—

P19AH Speaker - Right Front Door

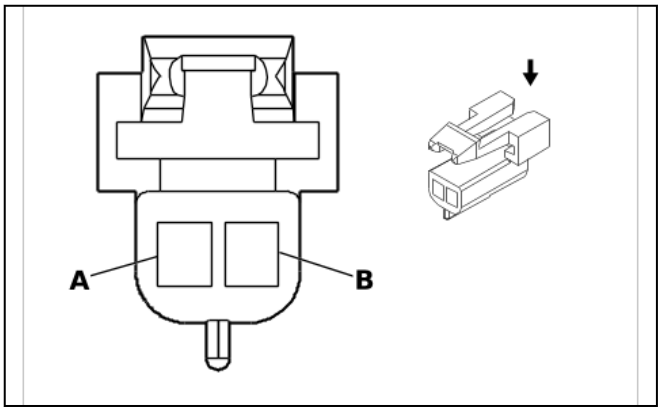

280768

Connector Part Information
- Harness Type: Front Side Door Door Wiring Harness - Passenger
- OEM Connector: 12052832
- Service Connector: Service by Harness - See Part Catalog
- Description: 2-Way F 150 Metri-Pack Series(BK)

Terminal Part Information

Terminal Type ID	Terminated Lead	Diagnostic Test Probe	Terminal Removal Tool
I	Not required	J-35616-14 (GN)	No Tool Required

P19AH Speaker - Right Front Door

Pin	Size	Color	Circuit	Function	Terminal Type ID	Option
A	0.75	GN	1953	Right Front Midrange Speaker [-] Control	I	—
B	0.75	OG	1853	Right Front Midrange Speaker [+] Control	I	—

P19F Speaker - Left Rear Cargo Door

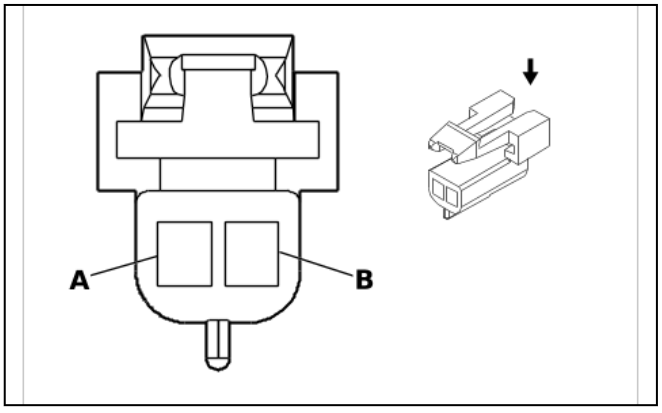

280768

Connector Part Information
- Harness Type: Rear Door Door Wiring Harness
- OEM Connector: 12052832
- Service Connector: Service by Harness - See Part Catalog
- Description: 2-Way F 150 Metri-Pack Series(BK)

Terminal Part Information

Terminal Type ID	Terminated Lead	Diagnostic Test Probe	Terminal Removal Tool
I	Not required	J-35616-14 (GN)	No Tool Required

P19F Speaker - Left Rear Cargo Door

Pin	Size	Color	Circuit	Function	Terminal Type ID	Option
A	1	WH	1959	Left Rear Midrange Speaker [-] Control	I	—
B	1	TN	1859	Left Rear Midrange Speaker [+] Control	I	—

P19LR Speaker - Left Rear Roof

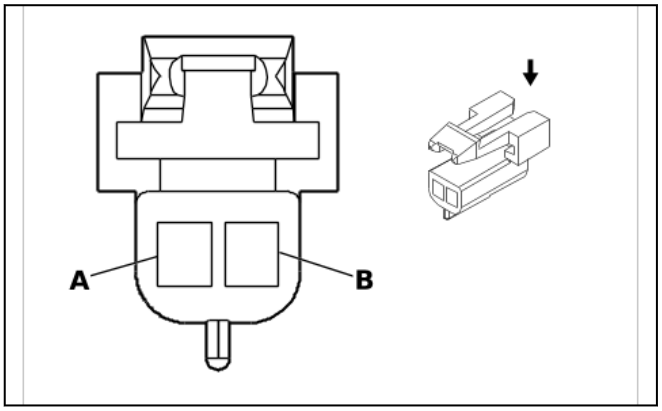

280768

Connector Part Information

- Harness Type: Radio Rear Speaker Wiring Harness
- OEM Connector: 12052832
- Service Connector: Service by Harness - See Part Catalog
- Description: 2-Way F 150 Metri-Pack Series(BK)

Terminal Part Information

Terminal Type ID	Terminated Lead	Diagnostic Test Probe	Terminal Removal Tool
I	Not required	J-35616-14 (GN)	No Tool Required

P19LR Speaker - Left Rear Roof

Pin	Size	Color	Circuit	Function	Terminal Type ID	Option
A	1	WH	1959	Left Rear Midrange Speaker [-] Control	I	—
B	1	TN	1859	Left Rear Midrange Speaker [+] Control	I	—

P19RR Speaker - Right Rear Roof

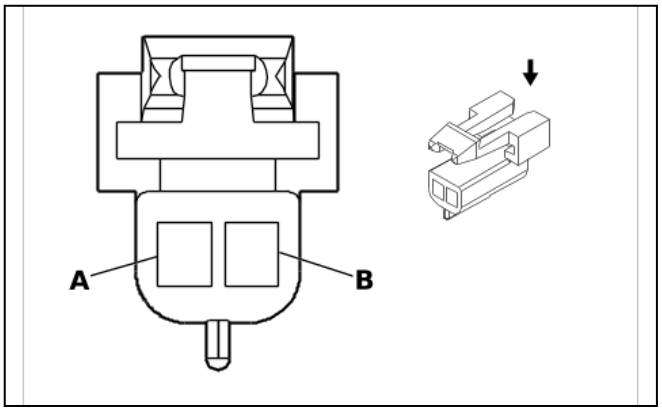

280768

Connector Part Information
- Harness Type: Radio Rear Speaker Wiring Harness
- OEM Connector: 12052832
- Service Connector: Service by Harness - See Part Catalog
- Description: 2-Way F 150 Metri-Pack Series(BK)

Terminal Part Information

Terminal Type ID	Terminated Lead	Diagnostic Test Probe	Terminal Removal Tool
I	Not required	J-35616-14 (GN)	No Tool Required

P19RR Speaker - Right Rear Roof

Pin	Size	Color	Circuit	Function	Terminal Type ID	Option
A	1	OG	1955	Right Rear Midrange Speaker [-] Control	I	—
B	1	TN	1855	Right Rear Midrange Speaker [+] Control	I	—

P19T Speaker - Right Rear Cargo Door

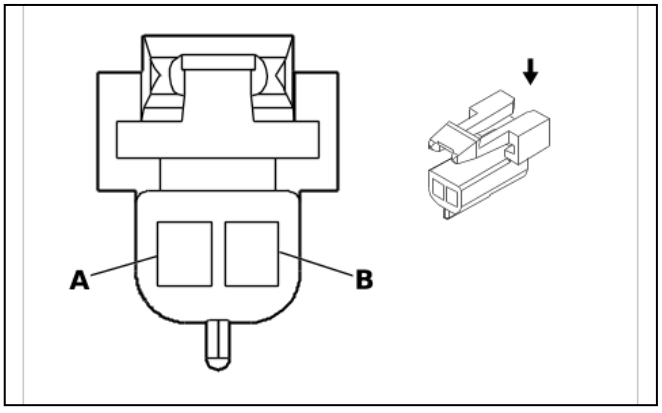

280768

Connector Part Information
- Harness Type: Rear Door Door Wiring Harness
- OEM Connector: 12052832
- Service Connector: Service by Harness - See Part Catalog
- Description: 2-Way F 150 Metri-Pack Series(BK)

Terminal Part Information

Terminal Type ID	Terminated Lead	Diagnostic Test Probe	Terminal Removal Tool
I	Not required	J-35616-14 (GN)	No Tool Required

P19T Speaker - Right Rear Cargo Door

Pin	Size	Color	Circuit	Function	Terminal Type ID	Option
A	1	OG	1955	Right Rear Midrange Speaker [-] Control	I	—
B	1	TN	1855	Right Rear Midrange Speaker [+] Control	I	—

P43 Collision Alert Indicators

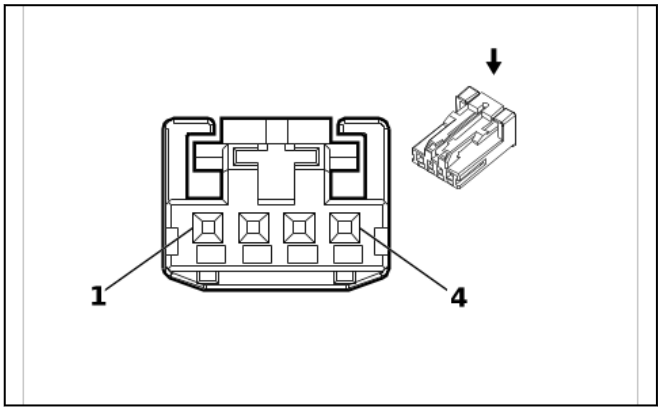

2717162

Connector Part Information

- Harness Type: Instrument Panel Wiring Harness
- OEM Connector: 1-936119-1
- Service Connector: 19367524
- Description: 4-Way F 0.64 Micro-Quadlock Series(BK)

Terminal Part Information

Terminal Type ID	Terminated Lead	Diagnostic Test Probe	Terminal Removal Tool
I	Not required	J-35616-64B (L-BU)	No Tool Required

P43 Collision Alert Indicators

Pin	Size	Color	Circuit	Function	Terminal Type ID	Option
(1) 1	(1) 0.5	(1) VT / BK	(1) 1639	(1) Run/Crank Ignition 1 Voltage	(1) I	(1) —
(2) 2	(2) 0.35	(2) GY / YE	(2) 3885	(2) Forward Collision Alert LED Control	(2) I	(2) —
(3) 3	(3) 0.35	(3) WH / GN	(3) 3535	(3) Reflected LED Display Dimming Control	(3) I	(3) —
(4) 4	(4) 0.5	(4) BK / WH	(4) 2151	(4) Signal Ground	(4) I	(4) —

Q2 A/C Compressor Clutch

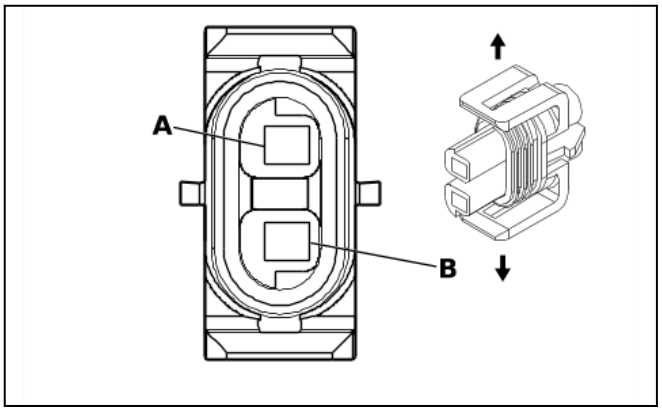

684852

Connector Part Information
- Harness Type: Engine Wiring Harness
- OEM Connector: 12162017
- Service Connector: 12101937
- Description: 2-Way F 150 Metri-Pack Series, Sealed(GY)

Terminal Part Information

Terminal Type ID	Terminated Lead	Diagnostic Test Probe	Terminal Removal Tool
I	Not required	J-35616-14 (GN)	No Tool Required

Q2 A/C Compressor Clutch

Pin	Size	Color	Circuit	Function	Terminal Type ID	Option
A	0.75	BK	1250	Ground	I	—
B	0.5	BN / GN	59	Air Conditioning Compressor Clutch Control	I	—

Q6 Camshaft Position Actuator Solenoid Valve

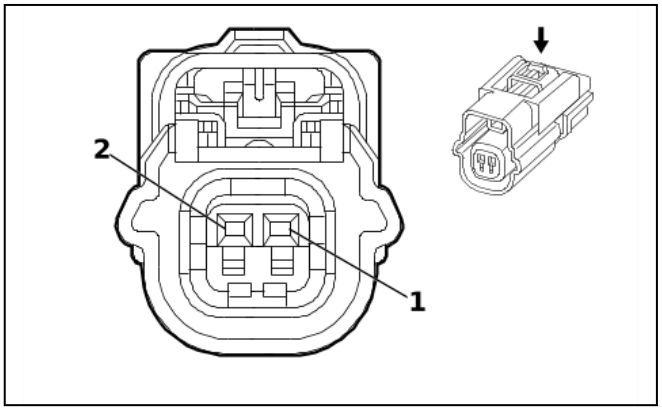

1664592

Connector Part Information
- Harness Type: Camshaft Position Sensor Wire
- OEM Connector: 54390239
- Service Connector: Service by Harness - See Part Catalog
- Description: 2-Way F 0.64 Kaizen Series, Sealed(BK)

Terminal Part Information

Terminal Type ID	Terminated Lead	Diagnostic Test Probe	Terminal Removal Tool
I	Not required	J-35616-64B (L-BU)	No Tool Required

Q6 Camshaft Position Actuator Solenoid Valve

Pin	Size	Color	Circuit	Function	Terminal Type ID	Option
(1) 1	(1) 0.5	(1) BK / BN	(1) 6753	(1) Camshaft Position Actuator Solenoid Valve 1 Low Reference	(1) I	(1) —
(2) 2	(2) 0.5	(2) VT / BN	(2) 5284	(2) Intake Camshaft Position Actuator Solenoid Valve 1	(2) I	(2) —

Q12 Evaporative Emission Purge Solenoid Valve

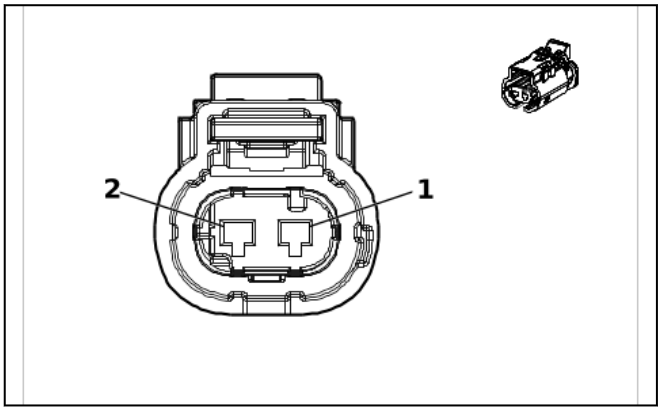

6776339

Connector Part Information

- Harness Type: Engine Wiring Harness
- OEM Connector: 10530497
- Service Connector: 86308598
- Description: 2-Way F 1.2 MLK Series, Sealed(BK)

Terminal Part Information

Terminal Type ID	Terminated Lead	Diagnostic Test Probe	Terminal Removal Tool
I	Not required	J-35616-16 (L-GN)	No Tool Required

Q12 Evaporative Emission Purge Solenoid Valve

Pin	Size	Color	Circuit	Function	Terminal Type ID	Option
(1) 1	(1) 0.5	(1) VT / BU	(1) 5293	(1) Powertrain Main Relay Fused Supply Voltage 4	(1) I	(1) —
(2) 2	(2) 0.5	(2) GN / BU	(2) 428	(2) EVAP Canister Purge Solenoid Control	(2) I	(2) —

Q13 Evaporative Emission Vent Solenoid Valve

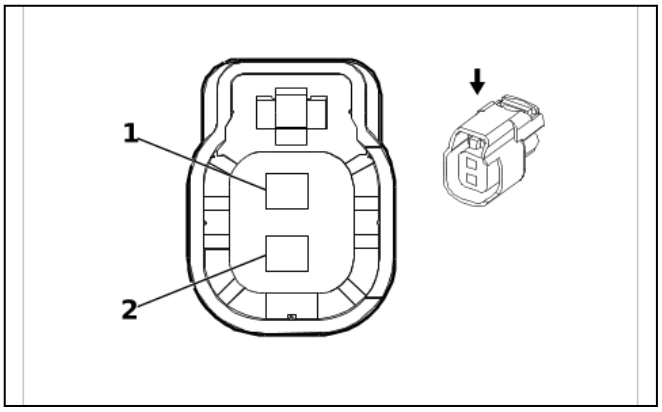

2422378

Connector Part Information
- Harness Type: Chassis Wiring Harness
- OEM Connector: 34062-0028
- Service Connector: 13579002
- Description: 2-Way F 1.5 Series, Sealed(BK)

Terminal Part Information

Terminal Type ID	Terminated Lead	Diagnostic Test Probe	Terminal Removal Tool
I	Not required	J-35616-14 (GN)	No Tool Required

Q13 Evaporative Emission Vent Solenoid Valve

Pin	Size	Color	Circuit	Function	Terminal Type ID	Option
(1) 1	(1) 0.5	(1) WH	(1) 1310	(1) EVAP Vent Solenoid Valve Control	(1) I	(1) —
(2) 2	(2) 0.5	(2) RD / GN	(2) 40	(2) Battery Positive Voltage	(2) I	(2) —

Q17A Fuel Injector 1

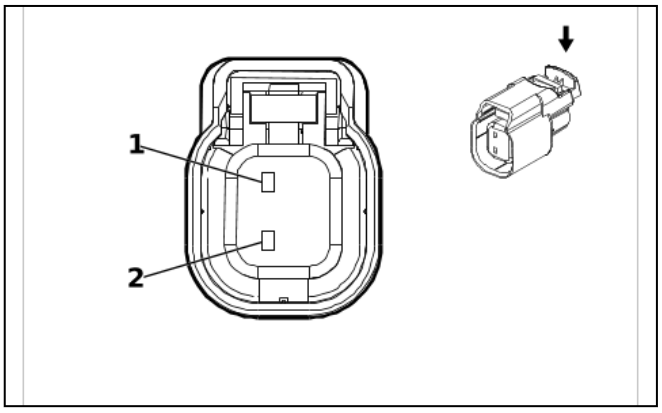

2792100

Connector Part Information
- Harness Type: Fuel Injector Wiring Harness - Left
- OEM Connector: 340624008
- Service Connector: Service by Harness - See Part Catalog
- Description: 2-Way F 1.5 Series, Sealed(BK)

Terminal Part Information

Terminal Type ID	Terminated Lead	Diagnostic Test Probe	Terminal Removal Tool
I	Not required	J-35616-2A (GY)	No Tool Required

Q17A Fuel Injector 1

Pin	Size	Color	Circuit	Function	Terminal Type ID	Option
(1) 1	(1) 0.75	(1) BN / WH	(1) 4901	(1) Direct Fuel Injector High Voltage Supply Cylinder 1	(1) I	(1) —
(2) 2	(2) 0.75	(2) BN	(2) 4801	(2) Direct Fuel Injector High Voltage Control Cylinder 1	(2) I	(2) —

Q17B Fuel Injector 2

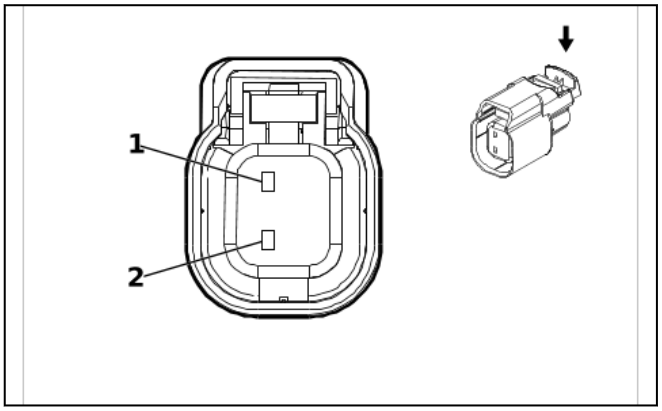

2792100

Connector Part Information

- Harness Type: Fuel Injector Wiring Harness - Right
- OEM Connector: 340624008
- Service Connector: Service by Harness - See Part Catalog
- Description: 2-Way F 1.5 Series, Sealed(BK)

Terminal Part Information

Terminal Type ID	Terminated Lead	Diagnostic Test Probe	Terminal Removal Tool
I	Not required	J-35616-2A (GY)	No Tool Required

Q17B Fuel Injector 2

Pin	Size	Color	Circuit	Function	Terminal Type ID	Option
(1) 1	(1) 0.75	(1) BU / GY	(1) 4902	(1) Direct Fuel Injector High Voltage Supply Cylinder 2	(1) I	(1) —
(2) 2	(2) 0.75	(2) BU	(2) 4802	(2) Direct Fuel Injector High Voltage Control Cylinder 2	(2) I	(2) —

Q17C Fuel Injector 3

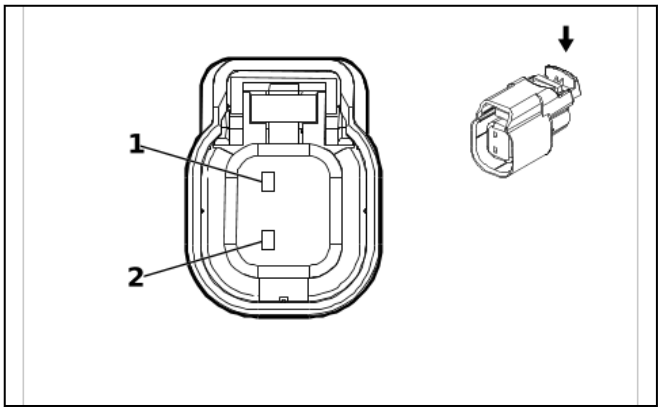

2792100

Connector Part Information
- Harness Type: Fuel Injector Wiring Harness - Left
- OEM Connector: 340624008
- Service Connector: Service by Harness - See Part Catalog
- Description: 2-Way F 1.5 Series, Sealed(BK)

Terminal Part Information

Terminal Type ID	Terminated Lead	Diagnostic Test Probe	Terminal Removal Tool
I	Not required	J-35616-2A (GY)	No Tool Required

Q17C Fuel Injector 3

Pin	Size	Color	Circuit	Function	Terminal Type ID	Option
(1) 1	(1) 0.75	(1) GN / GY	(1) 4903	(1) Direct Fuel Injector High Voltage Supply Cylinder 3	(1) I	(1) —
(2) 2	(2) 0.75	(2) GN	(2) 4803	(2) Direct Fuel Injector High Voltage Control Cylinder 3	(2) I	(2) —

Q17D Fuel Injector 4

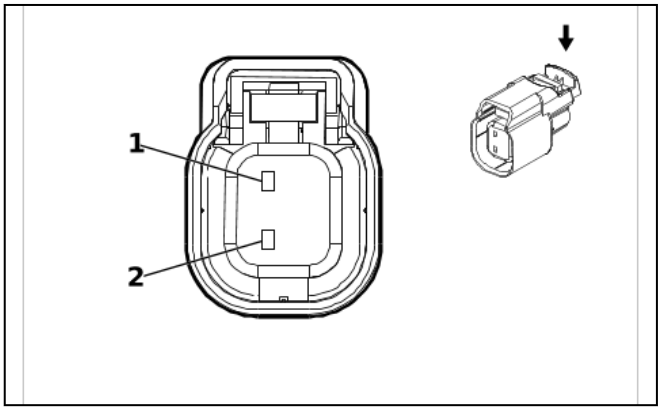

2792100

Connector Part Information
- Harness Type: Fuel Injector Wiring Harness - Right
- OEM Connector: 340624008
- Service Connector: Service by Harness - See Part Catalog
- Description: 2-Way F 1.5 Series, Sealed(BK)

Terminal Part Information

Terminal Type ID	Terminated Lead	Diagnostic Test Probe	Terminal Removal Tool
I	Not required	J-35616-2A (GY)	No Tool Required

Q17D Fuel Injector 4

Pin	Size	Color	Circuit	Function	Terminal Type ID	Option
(1) 1	(1) 0.75	(1) BU / WH	(1) 4904	(1) Direct Fuel Injector High Voltage Supply Cylinder 4	(1) I	(1) —
(2) 2	(2) 0.75	(2) GY / BU	(2) 4804	(2) Direct Fuel Injector High Voltage Control Cylinder 4	(2) I	(2) —

Q17E Fuel Injector 5

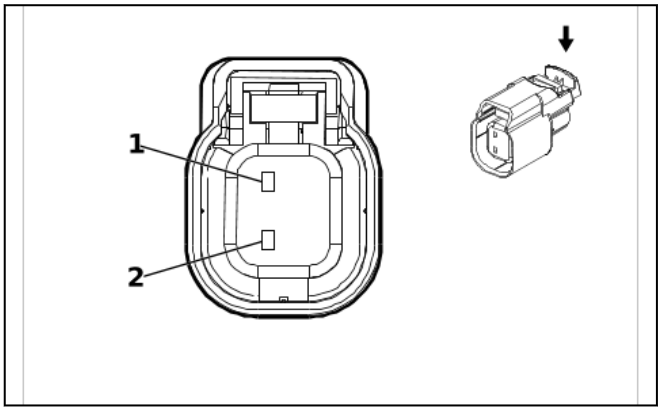

2792100

Connector Part Information

- Harness Type: Fuel Injector Wiring Harness - Left
- OEM Connector: 340624008
- Service Connector: Service by Harness - See Part Catalog
- Description: 2-Way F 1.5 Series, Sealed(BK)

Terminal Part Information

Terminal Type ID	Terminated Lead	Diagnostic Test Probe	Terminal Removal Tool
I	Not required	J-35616-2A (GY)	No Tool Required

Q17E Fuel Injector 5

Pin	Size	Color	Circuit	Function	Terminal Type ID	Option
(1) 1	(1) 0.75	(1) GN / WH	(1) 4905	(1) Direct Fuel Injector High Voltage Supply Cylinder 5	(1) I	(1) —
(2) 2	(2) 0.75	(2) WH / GN	(2) 4805	(2) Direct Fuel Injector High Voltage Control Cylinder 5	(2) I	(2) —

Q17F Fuel Injector 6

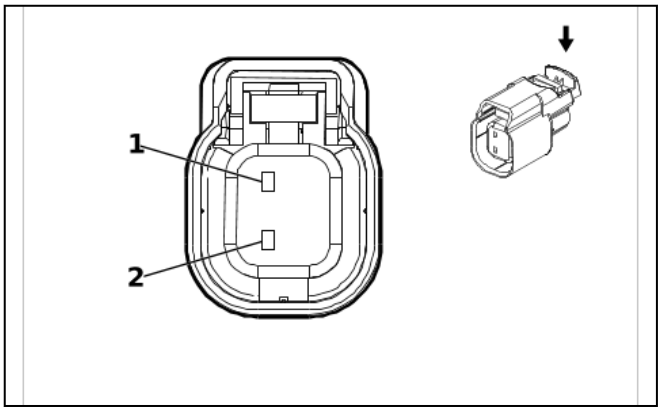

2792100

Connector Part Information
- Harness Type: Fuel Injector Wiring Harness - Right
- OEM Connector: 340624008
- Service Connector: Service by Harness - See Part Catalog
- Description: 2-Way F 1.5 Series, Sealed(BK)

Terminal Part Information

Terminal Type ID	Terminated Lead	Diagnostic Test Probe	Terminal Removal Tool
I	Not required	J-35616-2A (GY)	No Tool Required

Q17F Fuel Injector 6

Pin	Size	Color	Circuit	Function	Terminal Type ID	Option
(1) 1	(1) 0.75	(1) VT / GY	(1) 4906	(1) Direct Fuel Injector High Voltage Supply Cylinder 6	(1) I	(1) —
(2) 2	(2) 0.75	(2) VT / GN	(2) 4806	(2) Direct Fuel Injector High Voltage Control Cylinder 6	(2) I	(2) —

Q17G Fuel Injector 7

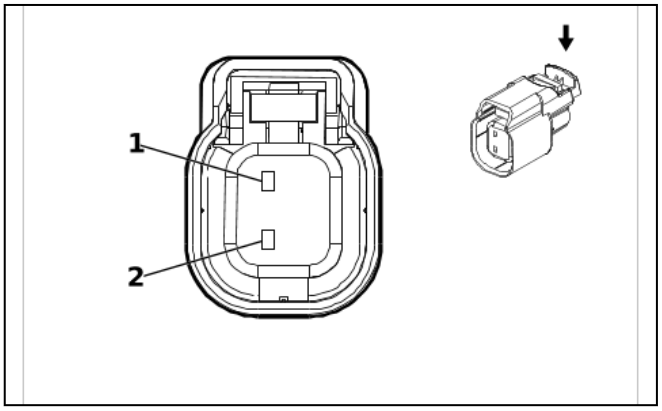

2792100

Connector Part Information
- Harness Type: Fuel Injector Wiring Harness - Left
- OEM Connector: 340624008
- Service Connector: Service by Harness - See Part Catalog
- Description: 2-Way F 1.5 Series, Sealed(BK)

Terminal Part Information

Terminal Type ID	Terminated Lead	Diagnostic Test Probe	Terminal Removal Tool
I	Not required	J-35616-2A (GY)	No Tool Required

Q17G Fuel Injector 7

Pin	Size	Color	Circuit	Function	Terminal Type ID	Option
(1) 1	(1) 0.75	(1) WH / YE	(1) 4907	(1) Direct Fuel Injector High Voltage Supply Cylinder 7	(1) I	(1) —
(2) 2	(2) 0.75	(2) YE / GY	(2) 4807	(2) Direct Fuel Injector High Voltage Control Cylinder 7	(2) I	(2) —

Q17H Fuel Injector 8

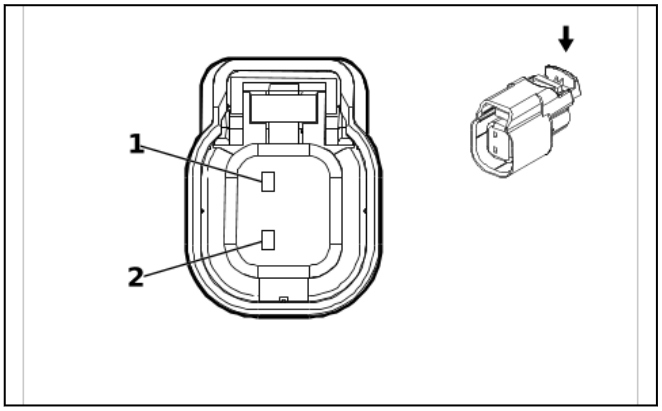

2792100

Connector Part Information

- Harness Type: Fuel Injector Wiring Harness - Right
- OEM Connector: 340624008
- Service Connector: Service by Harness - See Part Catalog
- Description: 2-Way F 1.5 Series, Sealed(BK)

Terminal Part Information

Terminal Type ID	Terminated Lead	Diagnostic Test Probe	Terminal Removal Tool
I	Not required	J-35616-2A (GY)	No Tool Required

Q17H Fuel Injector 8

Pin	Size	Color	Circuit	Function	Terminal Type ID	Option
(1) 1	(1) 0.75	(1) GY / WH	(1) 4908	(1) Direct Fuel Injector High Voltage Supply Cylinder 8	(1) I	(1) —
(2) 2	(2) 0.75	(2) GY	(2) 4808	(2) Direct Fuel Injector High Voltage Control Cylinder 8	(2) I	(2) —

Q38 Throttle Body

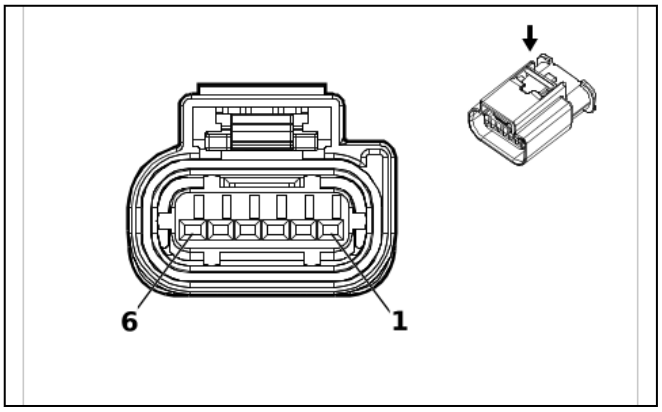

3747579

Connector Part Information

- Harness Type: Engine Wiring Harness
- OEM Connector: 2272975-5
- Service Connector: 19352911
- Description: 6-Way F 1.2 MCON Series, Sealed(BK)

Terminal Part Information

Terminal Type ID	Terminated Lead	Diagnostic Test Probe	Terminal Removal Tool
I	Not required	J-35616-12 (BU)	No Tool Required

Q38 Throttle Body

Pin	Size	Color	Circuit	Function	Terminal Type ID	Option
(1) 1	(1) 0.5	(1) YE	(1) 581	(1) Throttle Actuator Open Control	(1) I	(1) —
(2) 2	(2) 0.5	(2) BN / WH	(2) 582	(2) Throttle Actuator Close Control	(2) I	(2) —
(3) 3	(3) 0.5	(3) BU / WH	(3) 3630	(3) Throttle Position Sensor SENT 1 Signal	(3) I	(3) —
(4) 4	(4) 0.5	(4) BK / BN	(4) 2752	(4) Throttle Position Sensor Low Reference	(4) I	(4) —
(5) 5	(5) 0.5	(5) BN / RD	(5) 2701	(5) Throttle Position Sensor 5V Reference	(5) I	(5) —
6	—	—	—	Not Occupied	—	—

Q44 Engine Oil Pressure Control Solenoid Valve

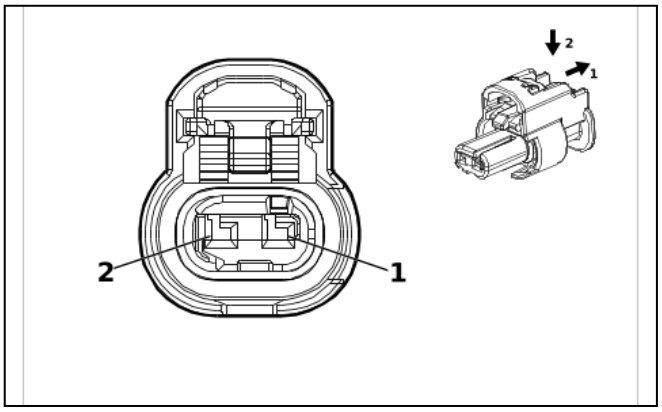

4036662

Connector Part Information
- Harness Type: Oil Pump Flow Control Solenoid Valve Wire
- OEM Connector: 1-2296704-1
- Service Connector: Service by Harness - See Part Catalog
- Description: 2-Way F 1.2 MCON-CB Series, Sealed(BK)

Terminal Part Information

Terminal Type ID	Terminated Lead	Diagnostic Test Probe	Terminal Removal Tool
I	Not required	J-35616-16 (L-GN)	No Tool Required

Q44 Engine Oil Pressure Control Solenoid Valve

Pin	Size	Color	Circuit	Function	Terminal Type ID	Option
(1) 1	(1) 0.5	(1) VT / BU	(1) 5293	(1) Powertrain Main Relay Fused Supply Voltage 4	(1) I	(1) —
(2) 2	(2) 0.5	(2) BU	(2) 179	(2) Engine Oil Pump Control	(2) I	(2) —

Q77A Transmission Control Solenoid Valve 1

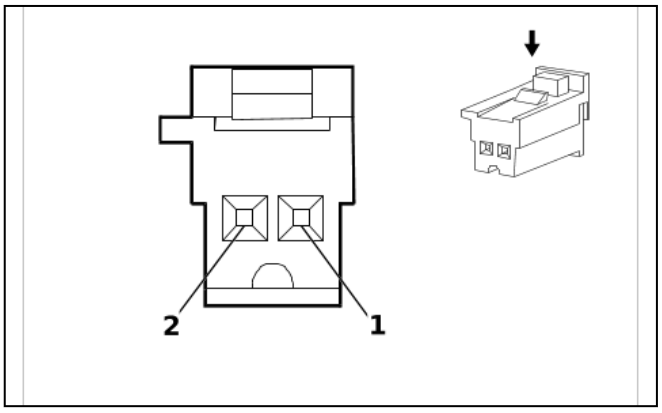

4051391

Connector Part Information
- Harness Type: Automatic Transmission Wiring Harness
- OEM Connector: 13956948
- Service Connector: Service by Harness - See Part Catalog
- Description: 2-Way F 0.64 MTS Series(VT)

Terminal Part Information

Terminal Type ID	Terminated Lead	Diagnostic Test Probe	Terminal Removal Tool
I	Not required	J-35616-64B (L-BU)	No Tool Required

Q77A Transmission Control Solenoid Valve 1

Pin	Size	Color	Circuit	Function	Terminal Type ID	Option
(1) 1	(1) 0.5	(1) BN	(1) 6400	(1) Clutch Solenoid Valve A Control	(1) I	(1) —
(2) 2	(2) 0.5	(2) GY / BN	(2) 6388	(2) Transmission High Side Driver 2 Control	(2) I	(2) —

Q77B Transmission Control Solenoid Valve 2

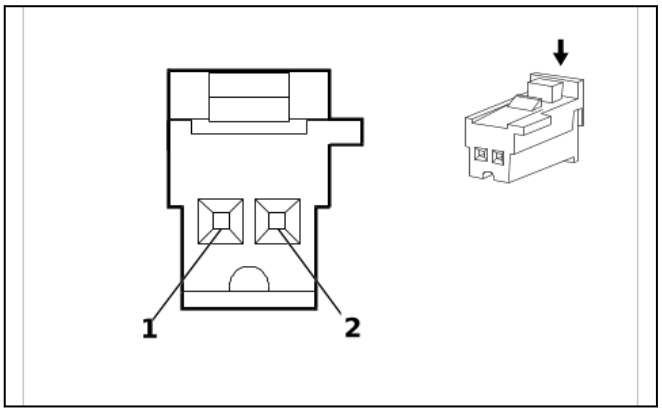

4008644

Connector Part Information

- Harness Type: Automatic Transmission Wiring Harness
- OEM Connector: 13941672
- Service Connector: Service by Harness - See Part Catalog
- Description: 2-Way F 0.64 MTS Series(GY)

Terminal Part Information

Terminal Type ID	Terminated Lead	Diagnostic Test Probe	Terminal Removal Tool
I	Not required	J-35616-64B (L-BU)	No Tool Required

Q77B Transmission Control Solenoid Valve 2

Pin	Size	Color	Circuit	Function	Terminal Type ID	Option
(1) 1	(1) 0.5	(1) BU	(1) 6401	(1) Clutch Solenoid Valve B Control	(1) I	(1) —
(2) 2	(2) 0.5	(2) GY / BN	(2) 6388	(2) Transmission High Side Driver 2 Control	(2) I	(2) —

Q77C Transmission Control Solenoid Valve 3

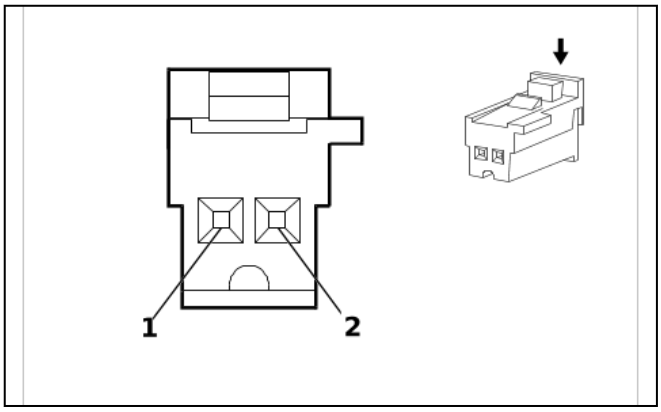

4008644

Connector Part Information
- Harness Type: Automatic Transmission Wiring Harness
- OEM Connector: 13941672
- Service Connector: Service by Harness - See Part Catalog
- Description: 2-Way F 0.64 MTS Series(GY)

Terminal Part Information

Terminal Type ID	Terminated Lead	Diagnostic Test Probe	Terminal Removal Tool
I	Not required	J-35616-64B (L-BU)	No Tool Required

Q77C Transmission Control Solenoid Valve 3

Pin	Size	Color	Circuit	Function	Terminal Type ID	Option
(1) 1	(1) 0.5	(1) GY	(1) 6402	(1) Clutch Solenoid Valve C Control	(1) I	(1) —
(2) 2	(2) 0.5	(2) GY / BN	(2) 6388	(2) Transmission High Side Driver 2 Control	(2) I	(2) —

Q77D Transmission Control Solenoid Valve 4

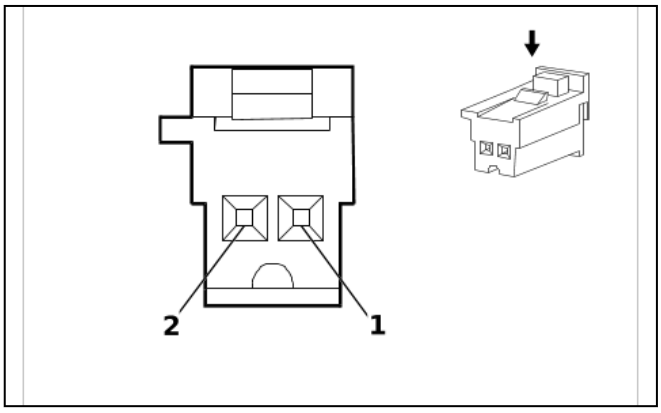

4051391

Connector Part Information
- Harness Type: Automatic Transmission Wiring Harness
- OEM Connector: 13956948
- Service Connector: Service by Harness - See Part Catalog
- Description: 2-Way F 0.64 MTS Series(VT)

Terminal Part Information

Terminal Type ID	Terminated Lead	Diagnostic Test Probe	Terminal Removal Tool
I	Not required	J-35616-64B (L-BU)	No Tool Required

Q77D Transmission Control Solenoid Valve 4

Pin	Size	Color	Circuit	Function	Terminal Type ID	Option
(1) 1	(1) 0.5	(1) WH	(1) 4508	(1) Transmission Clutch G Control	(1) I	(1) —
(2) 2	(2) 0.5	(2) GN / GY	(2) 6387	(2) Transmission High Side Driver 1 Control	(2) I	(2) —

Q77E Transmission Control Solenoid Valve 5

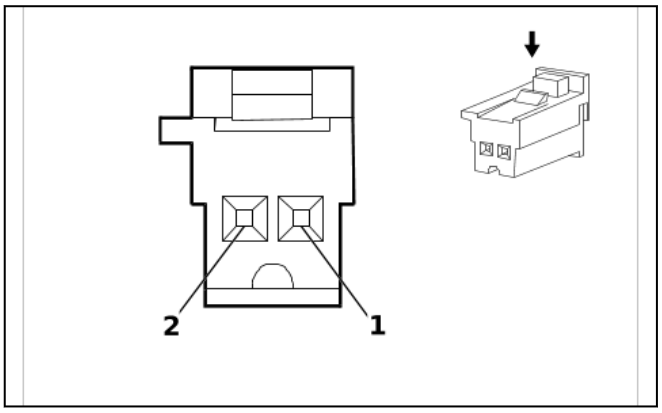

4051391

Connector Part Information

- Harness Type: Automatic Transmission Wiring Harness
- OEM Connector: 13956948
- Service Connector: Service by Harness - See Part Catalog
- Description: 2-Way F 0.64 MTS Series(VT)

Terminal Part Information

Terminal Type ID	Terminated Lead	Diagnostic Test Probe	Terminal Removal Tool
I	Not required	J-35616-64B (L-BU)	No Tool Required

Q77E Transmission Control Solenoid Valve 5

Pin	Size	Color	Circuit	Function	Terminal Type ID	Option
(1) 1	(1) 0.5	(1) WH / BU	(1) 4507	(1) Transmission Clutch H Control	(1) I	(1) —
(2) 2	(2) 0.5	(2) GN / GY	(2) 6387	(2) Transmission High Side Driver 1 Control	(2) I	(2) —

Q77F Transmission Control Solenoid Valve 6

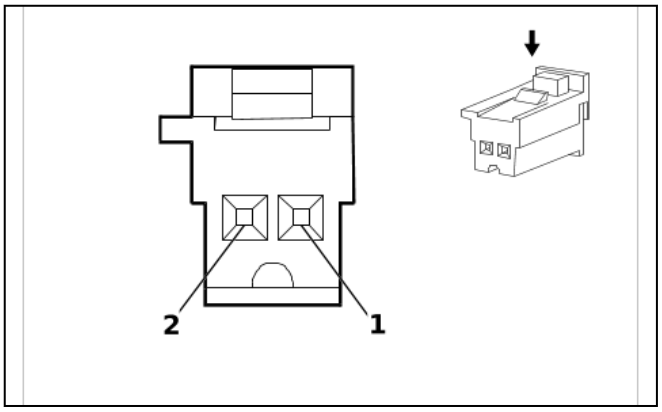

4051391

Connector Part Information
- Harness Type: Automatic Transmission Wiring Harness
- OEM Connector: 13956948
- Service Connector: Service by Harness - See Part Catalog
- Description: 2-Way F 0.64 MTS Series(VT)

Terminal Part Information

Terminal Type ID	Terminated Lead	Diagnostic Test Probe	Terminal Removal Tool
I	Not required	J-35616-64B (L-BU)	No Tool Required

Q77F Transmission Control Solenoid Valve 6

Pin	Size	Color	Circuit	Function	Terminal Type ID	Option
(1) 1	(1) 0.5	(1) GN / WH	(1) 1530	(1) Transmission Line Pressure Control Solenoid Valve Control	(1) I	(1) —
(2) 2	(2) 0.5	(2) GY / BN	(2) 6388	(2) Transmission High Side Driver 2 Control	(2) I	(2) —

Q77G Transmission Control Solenoid Valve 7

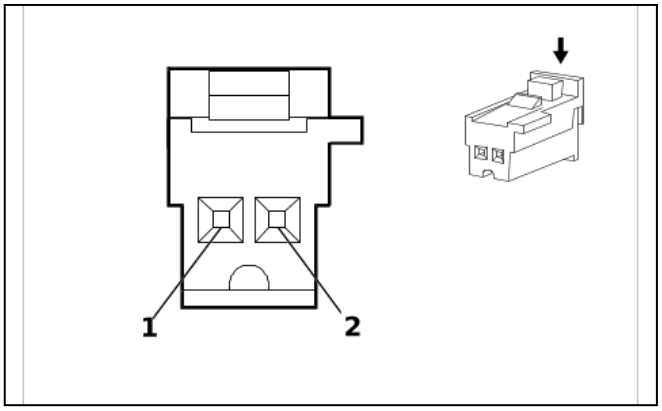

4008644

Connector Part Information
- Harness Type: Automatic Transmission Wiring Harness
- OEM Connector: 13941672
- Service Connector: Service by Harness - See Part Catalog
- Description: 2-Way F 0.64 MTS Series(GY)

Terminal Part Information

Terminal Type ID	Terminated Lead	Diagnostic Test Probe	Terminal Removal Tool
I	Not required	J-35616-64B (L-BU)	No Tool Required

Q77G Transmission Control Solenoid Valve 7

Pin	Size	Color	Circuit	Function	Terminal Type ID	Option
(1) 1	(1) 0.5	(1) VT / WH	(1) 422	(1) Torque Converter Clutch Solenoid Valve Control	(1) I	(1) —
(2) 2	(2) 0.5	(2) GY / BN	(2) 6388	(2) Transmission High Side Driver 2 Control	(2) I	(2) —

Q77H Transmission Control Solenoid Valve 8

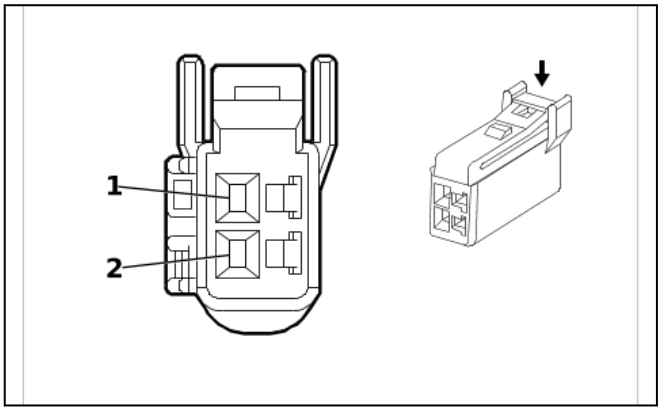

4051682

Connector Part Information

- Harness Type: Automatic Transmission Wiring Harness
- OEM Connector: 7287-0122
- Service Connector: Service by Harness - See Part Catalog
- Description: 2-Way F 040 III Series(NA)

Terminal Part Information

Terminal Type ID	Terminated Lead	Diagnostic Test Probe	Terminal Removal Tool
I	Not required	J-35616-16 (L-GN)	No Tool Required

Q77H Transmission Control Solenoid Valve 8

Pin	Size	Color	Circuit	Function	Terminal Type ID	Option
(1) 1	(1) 0.5	(1) GN / GY	(1) 6387	(1) Transmission High Side Driver 1 Control	(1) I	(1) —
(2) 2	(2) 0.5	(2) GN / WH	(2) 6380	(2) Torque Converter Clutch Enable Solenoid Valve A Control	(2) I	(2) —

Q77J Transmission Control Solenoid Valve 9

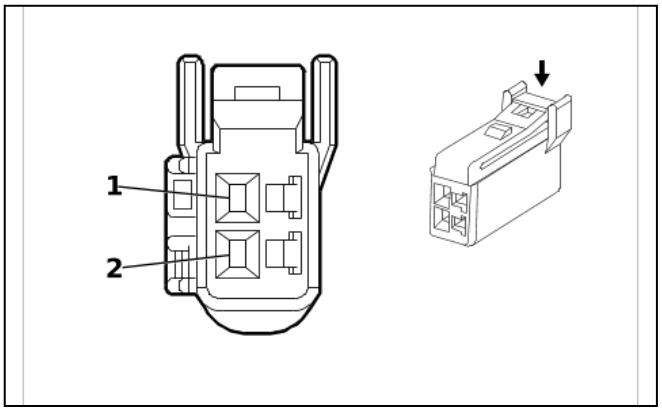

4051682

Connector Part Information
- Harness Type: Automatic Transmission Wiring Harness
- OEM Connector: 7287-0122
- Service Connector: Service by Harness - See Part Catalog
- Description: 2-Way F 040 III Series(NA)

Terminal Part Information

Terminal Type ID	Terminated Lead	Diagnostic Test Probe	Terminal Removal Tool
I	Not required	J-35616-16 (L-GN)	No Tool Required

Q77J Transmission Control Solenoid Valve 9

Pin	Size	Color	Circuit	Function	Terminal Type ID	Option
(1) 1	(1) 0.5	(1) GY / BN	(1) 6388	(1) Transmission High Side Driver 2 Control	(1) I	(1) —
(2) 2	(2) 0.5	(2) YE / BN	(2) 6210	(2) Torque Converter Clutch Enable Solenoid Valve B Control	(2) I	(2) —

R3 Blower Motor Resistor

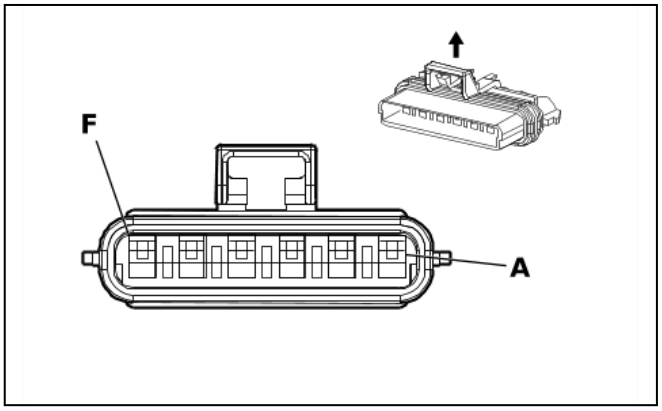

535914

Connector Part Information
- Harness Type: Engine Wiring Harness
- OEM Connector: 12160746
- Service Connector: 15306007
- Description: 6-Way F 280 Metri-Pack Flexlock Series, Sealed(L-GY)

Terminal Part Information

Terminal Type ID	Terminated Lead	Diagnostic Test Probe	Terminal Removal Tool
I	Not required	J-35616-4A (PU)	No Tool Required

R3 Blower Motor Resistor

Pin	Size	Color	Circuit	Function	Terminal Type ID	Option
A	5	RD / PU	542	Battery Positive Voltage	I	—
B	1	WH / BK	52	Blower Motor High Speed Control	I	—
C	4	BK	1250	Ground	I	—
D	1	YE / BN	63	Blower Motor Medium 1 Control	I	—
E	1	YE	60	Blower Motor Low Speed Control	I	—
F	2	BU / YE	72	Blower Motor Medium 2 Control	I	—

R3B Blower Motor Resistor - Auxiliary

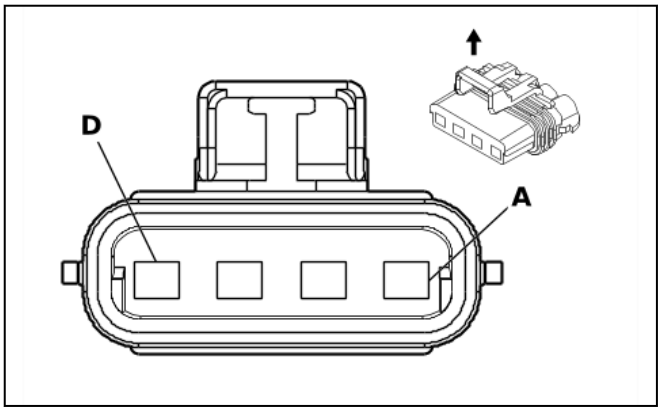

697053

Connector Part Information

- Harness Type: Auxiliary Heater and Air Conditioning Wiring Harness
- OEM Connector: 12129566
- Service Connector: Service by Harness - See Part Catalog
- Description: 4-Way F 280 Metri-Pack Series, Sealed(GY)

Terminal Part Information

Terminal Type ID	Terminated Lead	Diagnostic Test Probe	Terminal Removal Tool
I	Not required	J-35616-4A (PU)	No Tool Required

R3B Blower Motor Resistor - Auxiliary

Pin	Size	Color	Circuit	Function	Terminal Type ID	Option
A	3	YE	1176	Auxiliary Blower Motor Low Speed Control	I	—
B	—	—	—	Not Occupied	—	—
C	3	BU	1072	Auxiliary Blower Motor Medium Speed Control	I	—
D	3	YE	1172	Auxiliary Blower Motor Control	I	—

R6A Terminating Resistor - High Speed Bus

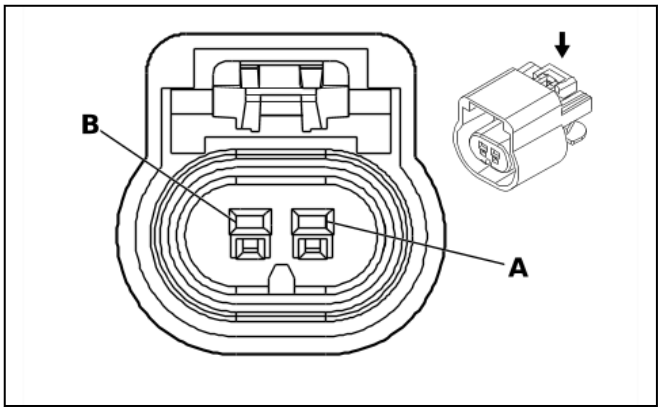

523630

Connector Part Information
- Harness Type: Engine Wiring Harness
- OEM Connector: 13510085
- Service Connector: 87815146
- Description: 2-Way F 150 GT Series, Sealed(BK)

Terminal Part Information

Terminal Type ID	Terminated Lead	Diagnostic Test Probe	Terminal Removal Tool
I	Not required	J-35616-14 (GN)	No Tool Required

R6A Terminating Resistor - High Speed Bus

Pin	Size	Color	Circuit	Function	Terminal Type ID	Option
A	0.5	BU	2500	High Speed GMLAN Serial Data [+] 1	I	—
B	0.5	WH	2501	High Speed GMLAN Serial Data [-] 1	I	—

S2 Transmission Manual Shift Switch

—

Connector Part Information
- Harness Type: Rear Window Defogger Wiring Harness
- OEM Connector: Not Available
- Service Connector: Service by Harness - See Part Catalog
- Description: 2-Way

Terminal Part Information

Terminal Type ID	Terminated Lead	Diagnostic Test Probe	Terminal Removal Tool
I	Not required	No Tool Required	No Tool Required

S2 Transmission Manual Shift Switch

Pin	Size	Color	Circuit	Function	Terminal Type ID	Option
C	—	PU	5526	Tap Up/Tap Down Switch Signal	I	—
D	—	PK	1444	12V Reference	I	—

S13A Door Lock Switch - Rear Cargo

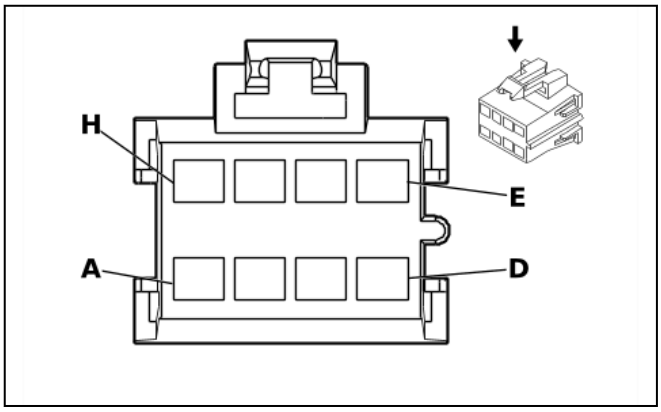

62469

Connector Part Information

- Harness Type: Rear Door Door Wiring Harness
- OEM Connector: 12064998
- Service Connector: Service by Harness - See Part Catalog
- Description: 8-Way F 280 Metri-Pack Series(BK)

Terminal Part Information

Terminal Type ID	Terminated Lead	Diagnostic Test Probe	Terminal Removal Tool
I	Not required	J-35616-4A (PU)	No Tool Required

S13A Door Lock Switch - Rear Cargo

Pin	Size	Color	Circuit	Function	Terminal Type ID	Option
A	0.35	BU	244	Passenger Door Lock Switch Lock Control	I	—
B - C	—	—	—	Not Occupied	—	—
D	0.35	BU	245	Passenger Door Lock Switch Unlock Control	I	—
E	0.35	BK / WH	1051	Signal Ground	I	—
F - H	—	—	—	Not Occupied	—	—

S13D Door Lock Switch - Driver

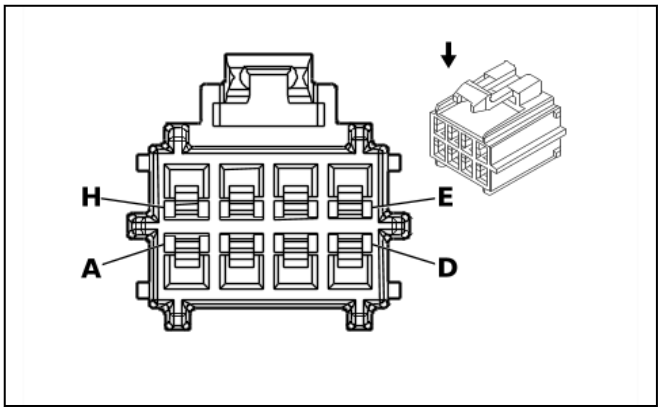

851474

Connector Part Information

- Harness Type: Front Side Door Door Wiring Harness - Driver
- OEM Connector: 15418533
- Service Connector: Service by Harness - See Part Catalog
- Description: 8-Way F 280 GT Series(L-GN)

Terminal Part Information

Terminal Type ID	Terminated Lead	Diagnostic Test Probe	Terminal Removal Tool
I	Not required	J-35616-4A (PU)	No Tool Required

S13D Door Lock Switch - Driver

Pin	Size	Color	Circuit	Function	Terminal Type ID	Option
A	0.35	BK	450	Ground	I	—
B	0.35	BK	450	Ground	I	—
C	0.35	BN / WH	230	Instrument Panel Lamp Dimming Control	I	—
D - E	—	—	—	Not Occupied	—	—
F	0.35	OG / BK	781	Driver Door Lock Switch Unlock Signal	I	—
G	0.35	PK / BK	780	Driver Door Lock Switch Lock Signal	I	—
H	—	—	—	Not Occupied	—	—

S13P Door Lock Switch - Passenger

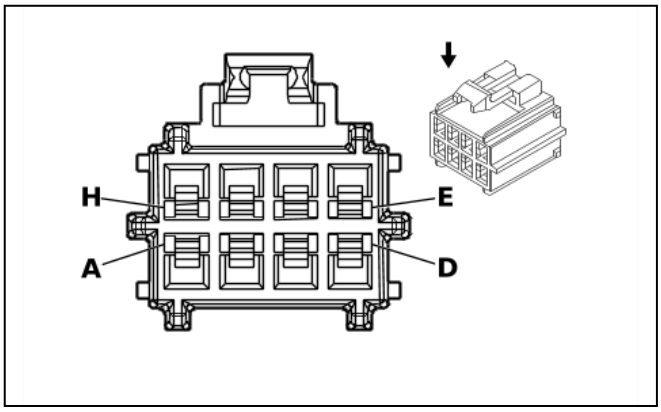

851474

Connector Part Information

- Harness Type: Front Side Door Door Wiring Harness - Passenger
- OEM Connector: 15418533
- Service Connector: Service by Harness - See Part Catalog
- Description: 8-Way F 280 GT Series(L-GN)

Terminal Part Information

Terminal Type ID	Terminated Lead	Diagnostic Test Probe	Terminal Removal Tool
I	Not required	J-35616-4A (PU)	No Tool Required

S13P Door Lock Switch - Passenger

Pin	Size	Color	Circuit	Function	Terminal Type ID	Option
A	0.35	BK	1850	Ground	I	—
B	0.35	BK	1850	Ground	I	—
C	0.35	BN / WH	230	Instrument Panel Lamp Dimming Control	I	—
D - E	—	—	—	Not Occupied	—	—
F	0.35	BU	245	Passenger Door Lock Switch Unlock Control	I	—
G	0.35	BU	244	Passenger Door Lock Switch Lock Control	I	—
H	—	—	—	Not Occupied	—	—

S16 Driver Information Center Switch

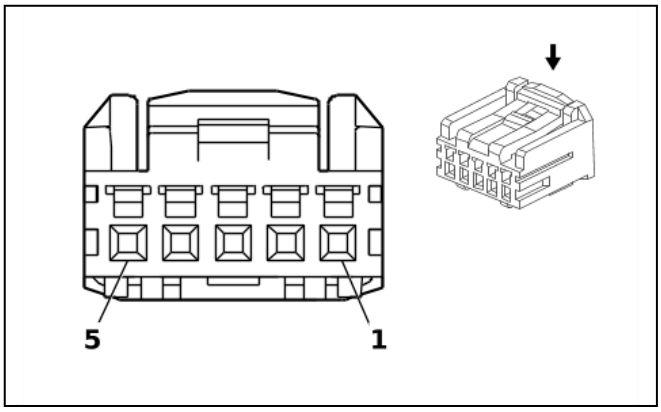

1673494

Connector Part Information

- Harness Type: Instrument Panel Wiring Harness
- OEM Connector: HCMPB-A05-K
- Service Connector: 88988747
- Description: 5-Way F HCM 5PA Series(BK)

Terminal Part Information

Terminal Type ID	Terminated Lead	Diagnostic Test Probe	Terminal Removal Tool
I	Not required	J-35616-64B (L-BU)	No Tool Required

S16 Driver Information Center Switch

Pin	Size	Color	Circuit	Function	Terminal Type ID	Option
(1) 1	(1) 0.35	(1) GN / WH	(1) 1358	(1) Driver Information Center Switch Signal	(1) I	(1) —
(2) 2	(2) 0.35	(2) BN	(2) 897	(2) Driver Information Center Switch Low Reference	(2) I	(2) —
(3) 3	(3) 0.35	(3) PK	(3) 893	(3) Driver Information Center Select Menu Switch Signal	(3) I	(3) —
(4) 4	(4) 0.5	(4) YE	(4) 6817	(4) LED Backlight Dimming Control 1	(4) I	(4) —
(5) 5	(5) 0.5	(5) BK / WH	(5) 351	(5) Signal Ground	(5) I	(5) —

S30 Headlamp Switch

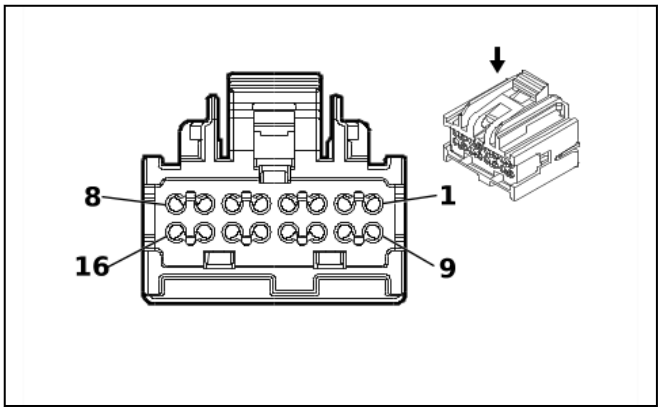

2127936

Connector Part Information

- Harness Type: Instrument Panel Wiring Harness
- OEM Connector: 13568238
- Service Connector: 13504130
- Description: 16-Way F 0.64 Micro-Series(BK)

Terminal Part Information

Terminal Type ID	Terminated Lead	Diagnostic Test Probe	Terminal Removal Tool
I	13579976	J-35616-64B (L-BU)	J-38125-21
II	19370337	J-35616-64B (L-BU)	J-38125-21

S30 Headlamp Switch

Pin	Size	Color	Circuit	Function	Terminal Type ID	Option
(1) 1	(1) 0.35	(1) WH	(1) 103	(1) Headlamp Switch On Signal	(1) II	(1) —
(2) 2	(2) 0.35	(2) BU	(2) 13	(2) Headlamp Switch Park Lamp Signal	(2) II	(2) —
(3) 3	(3) 0.35	(3) GN	(3) 306	(3) Headlamp Switch Off Signal	(3) II	(3) —
4 - 6	—	—	—	Not Occupied	—	—
(7) 7	(7) 0.35	(7) BN / WH	(7) 230	(7) Instrument Panel Lamp Dimming Control	(7) II	(7) —
(8) 8	(8) 0.5	(8) BK / WH	(8) 351	(8) Signal Ground	(8) I	(8) —
(9) 9	(9) 0.35	(9) PU	(9) 328	(9) Interior Lamp Defeat Switch Signal	(9) II	(9) —
10 - 11	—	—	—	Not Occupied	—	—
(12) 12	(12) 0.35	(12) BU / WH	(12) 149	(12) Courtesy Lamp Control	(12) II	(12) —
(13) 13	(13) 0.35	(13) GN	(13) 44	(13) Instrument Panel Lamp Dimmer Switch Signal	(13) II	(13) —
14	—	—	—	Not Occupied	—	—
(15) 15	(15) 0.35	(15) OG / WH	(15) 812	(15) 12V Reference	(15) II	(15) —
16	—	—	—	Not Occupied	—	—

S33 Horn Switch

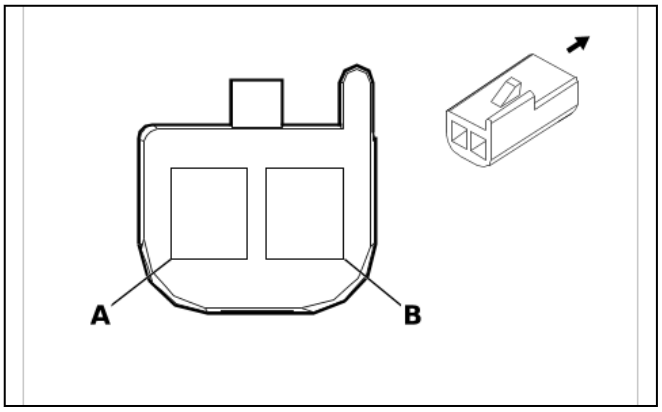

82383

Connector Part Information
- Harness Type: Steering Wheel Pad Accessory Wiring Harness
- OEM Connector: SOM-21T-187
- Service Connector: Service by Harness - See Part Catalog
- Description: 1-Way M Tab-On-Tab

Terminal Part Information

Terminal Type ID	Terminated Lead	Diagnostic Test Probe	Terminal Removal Tool
I	Not required	No Tool Required	No Tool Required

S33 Horn Switch

Pin	Size	Color	Circuit	Function	Terminal Type ID	Option
A	0.35	TN	28	Horn Relay Control	I	—
B	0.35	BK	350	Ground	I	—

S34 HVAC Controls Switch Assembly X1

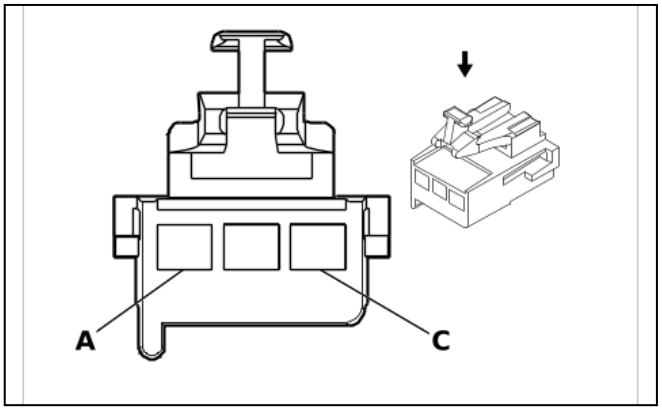

68737

Connector Part Information
- Harness Type: Instrument Panel Wiring Harness
- OEM Connector: 12129489
- Service Connector: 19368864
- Description: 3-Way F 280 Metri-Pack Flexlock Series(BK)

Terminal Part Information

Terminal Type ID	Terminated Lead	Diagnostic Test Probe	Terminal Removal Tool
I	Not required	J-35616-4A (PU)	No Tool Required

S34 HVAC Controls Switch Assembly X1

Pin	Size	Color	Circuit	Function	Terminal Type ID	Option
A	1	WH	119	Mode Door Control	I	—
B	1	BK	550	Ground	I	—
C	0.35	BN / WH	230	Instrument Panel Lamp Dimming Control	I	—

S34 HVAC Controls Switch Assembly X2

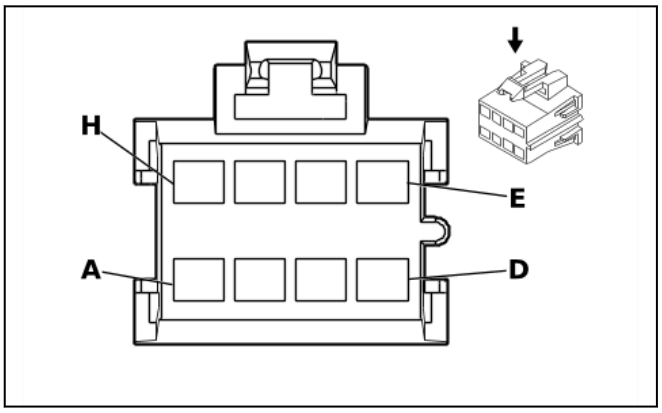

62469

Connector Part Information

- Harness Type: Instrument Panel Wiring Harness
- OEM Connector: 12064998
- Service Connector: 15306189
- Description: 8-Way F 280 Metri-Pack Series(BK)

Terminal Part Information

Terminal Type ID	Terminated Lead	Diagnostic Test Probe	Terminal Removal Tool
I	Not required	J-35616-4A (PU)	No Tool Required

S34 HVAC Controls Switch Assembly X2

Pin	Size	Color	Circuit	Function	Terminal Type ID	Option
A	0.75	YE	60	Blower Motor Low Speed Control	I	—
B	0.75	TN	63	Blower Motor Medium 1 Control	I	—
C	0.75	BU	72	Blower Motor Medium 2 Control	I	—
D	0.75	OG	52	Blower Motor High Speed Control	I	—
E	1	BN	141	Run Ignition 3 Voltage	I	—
F	0.75	BU	733	Air Temperature Door Position Signal	I	—
G	1	WH	119	Mode Door Control	I	—
H	0.5	GN / WH	762	Air Conditioning Request Signal 2	I	—

S34 HVAC Controls Switch Assembly X3

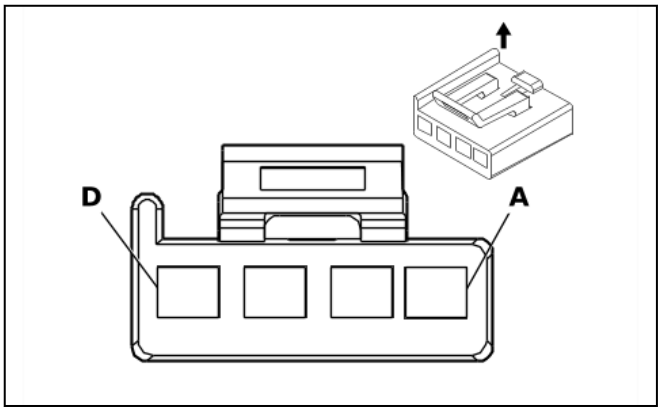

62450

Connector Part Information

- Harness Type: Instrument Panel Wiring Harness
- OEM Connector: 12052856
- Service Connector: 12125636
- Description: 4-Way F 280 Metri-Pack Series(BK)

Terminal Part Information

Terminal Type ID	Terminated Lead	Diagnostic Test Probe	Terminal Removal Tool
I	Not required	J-35616-4A (PU)	No Tool Required

S34 HVAC Controls Switch Assembly X3

Pin	Size	Color	Circuit	Function	Terminal Type ID	Option
A	0.75	RD / WH	4440	Battery Positive Voltage	I	—
B	0.35	BN	341	Run Ignition 3 Voltage	I	—
C	1	BK	550	Ground	I	—
D	0.35	WH	193	Rear Defogger Relay Control	I	—

S34 HVAC Controls Switch Assembly X4

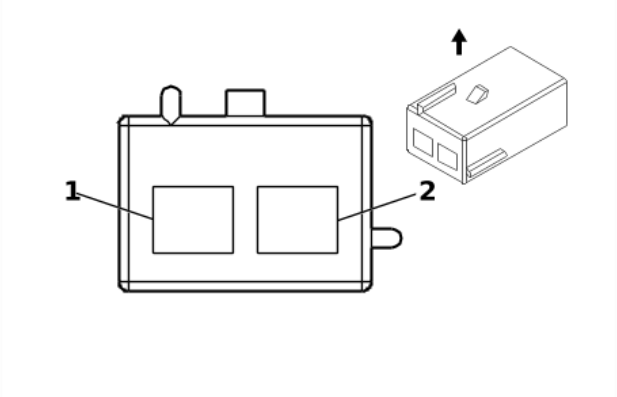

1283895

Connector Part Information
- Harness Type: Instrument Panel Wiring Harness
- OEM Connector: 15318080
- Service Connector: 21019410
- Description: 2-Way F 280 Metri-Pack Series(BK)

Terminal Part Information

Terminal Type ID	Terminated Lead	Diagnostic Test Probe	Terminal Removal Tool
I	Not required	J-35616-4A (PU)	No Tool Required

S34 HVAC Controls Switch Assembly X4

Pin	Size	Color	Circuit	Function	Terminal Type ID	Option
(1) 1	(1) 0.5	(1) GN	(1) 66	(1) Air Conditioning Request Signal	(1) I	(1) —
(2) 2	(2) 0.5	(2) GN / WH	(2) 762	(2) Air Conditioning Request Signal 2	(2) I	(2) —

S34F HVAC Controls Switch Assembly - Auxiliary Front (With Rear HVAC Controls)

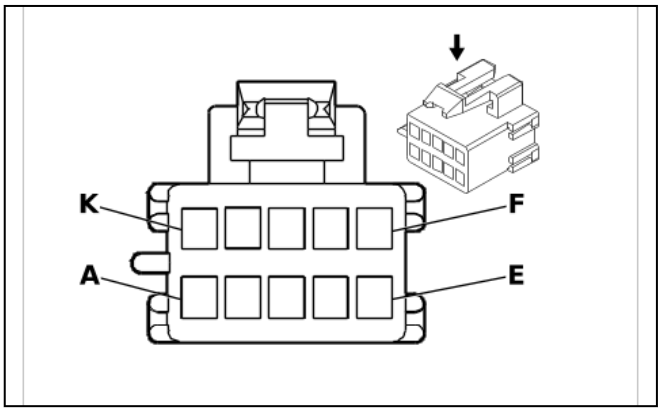

62464

Connector Part Information
- Harness Type: Roof Console Wiring Harness
- OEM Connector: 12064769
- Service Connector: 12101762
- Description: 10-Way F 150 Metri-Pack Series(NA)

Terminal Part Information

Terminal Type ID	Terminated Lead	Diagnostic Test Probe	Terminal Removal Tool
I	13575464	J-35616-14 (GN)	J-38125-12A

S34F HVAC Controls Switch Assembly - Auxiliary Front (With Rear HVAC Controls)

Pin	Size	Color	Circuit	Function	Terminal Type ID	Option
A	0.35	BN / WH	230	Instrument Panel Lamp Dimming Control	I	—
B	0.35	BK	1850	Ground	I	—
C	0.5	BU	1926	Auxiliary Blower Motor Low Speed Control 2	I	—
D	0.5	WH	1924	Auxiliary Blower Motor High Speed Control	I	—
E	0.5	OG	1925	Auxiliary Blower Motor Medium Speed Control 2	I	—
F	0.35	YE	5262	Auxiliary HVAC Rear Controls Enable Signal	I	—
G	0.35	BN	341	Run Ignition 3 Voltage	I	—
H	0.35	PU	5260	Auxiliary HVAC Front Temperature Signal	I	—
J	0.35	TN	5261	Auxiliary HVAC Front Mode Signal	I	—
K	—	—	—	Not Occupied	—	—

S34F HVAC Controls Switch Assembly - Auxiliary Front (Without Rear HVAC Controls)

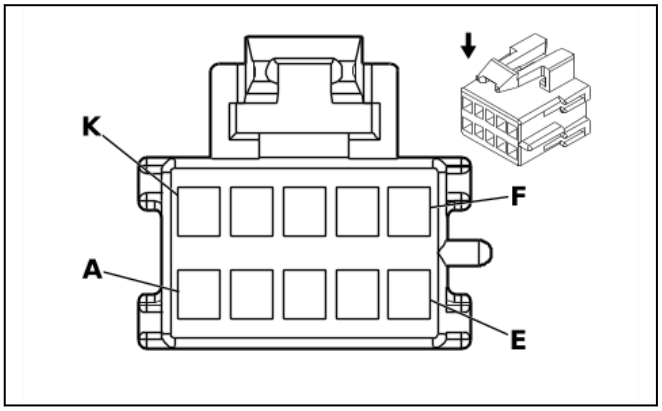

803688

Connector Part Information

- Harness Type: Roof Console Wiring Harness
- OEM Connector: 12064871
- Service Connector: 12101832
- Description: 10-Way F 150 Metri-Pack Series(BU)

Terminal Part Information

Terminal Type ID	Terminated Lead	Diagnostic Test Probe	Terminal Removal Tool
I	13575464	J-35616-14 (GN)	J-38125-12A

S34F HVAC Controls Switch Assembly - Auxiliary Front (Without Rear HVAC Controls)

Pin	Size	Color	Circuit	Function	Terminal Type ID	Option
A	0.35	BN / WH	230	Instrument Panel Lamp Dimming Control	I	—
B	0.35	BK	1850	Ground	I	—

Pin	Size	Color	Circuit	Function	Terminal Type ID	Option
C	0.5	BU	1926	Auxiliary Blower Motor Low Speed Control 2	I	—
D	0.5	WH	1924	Auxiliary Blower Motor High Speed Control	I	—
E	0.5	OG	1925	Auxiliary Blower Motor Medium Speed Control 2	I	—
F	0.35	BK	1850	Ground	I	—
G	0.35	BN	341	Run Ignition 3 Voltage	I	—
H	0.35	OG	2775	Rear Air Temperature Door Actuator Control	I	—
J	0.35	GY	2599	Rear Mode Door Actuator Signal	I	—
K	—	—	—	Not Occupied	—	—

S34R HVAC Controls Switch Assembly - Auxiliary Rear

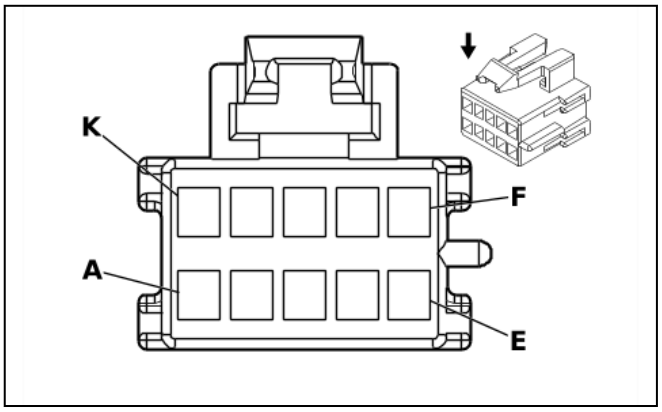

803688

Connector Part Information

- Harness Type: Roof Console Wiring Harness - Rear Extension
- OEM Connector: 12064871
- Service Connector: 12101832
- Description: 10-Way F 150 Metri-Pack Series(BU)

Terminal Part Information

Terminal Type ID	Terminated Lead	Diagnostic Test Probe	Terminal Removal Tool
I	13575464	J-35616-14 (GN)	J-38125-12A

S34R HVAC Controls Switch Assembly - Auxiliary Rear

Pin	Size	Color	Circuit	Function	Terminal Type ID	Option
A	0.35	BN / WH	230	Instrument Panel Lamp Dimming Control	I	—
B	0.5	BK	1050	Ground	I	—
C	0.5	BU	1926	Auxiliary Blower Motor Low Speed Control 2	I	—
D	0.5	WH	1924	Auxiliary Blower Motor High Speed Control	I	—
E	0.5	OG	1925	Auxiliary Blower Motor Medium Speed Control 2	I	—
F	0.5	PK / BK	5265	Auxiliary HVAC Rear Control Signal	I	—
G	0.35	BN	341	Run Ignition 3 Voltage	I	—
H	0.5	BN	5263	Auxiliary HVAC Rear Temperature Signal	I	—

Pin	Size	Color	Circuit	Function	Terminal Type ID	Option
J	0.5	PU / WH	5264	Auxiliary HVAC Rear Mode Signal	I	—
K	—	—	—	Not Occupied	—	—

S39 Ignition Switch

—

Connector Part Information
- Harness Type: Rear Window Defogger Wiring Harness
- OEM Connector: Not Available
- Service Connector: Service by Harness - See Part Catalog
- Description: 5-Way

Terminal Part Information

Terminal Type ID	Terminated Lead	Diagnostic Test Probe	Terminal Removal Tool
I	Not required	No Tool Required	No Tool Required

S39 Ignition Switch

Pin	Size	Color	Circuit	Function	Terminal Type ID	Option
(2) 2	(2) —	(2) PK	(2) 3	(2) Run/Crank Ignition 1 Voltage	(2) I	(2) —
(3) 3	(3) —	(3) BN	(3) 4	(3) Accessory Ignition Voltage	(3) I	(3) —
(4) 4	(4) —	(4) RD / WH	(4) 540	(4) Battery Positive Voltage	(4) I	(4) —
(5) 5	(5) —	(5) PK	(5) 1020	(5) Off/Run/Crank Ignition Voltage	(5) I	(5) —
(6) 6	(6) —	(6) WH	(6) 530	(6) Off/Run/Crank Ignition Voltage	(6) I	(6) —

S40 Passenger Air Bag Disable Switch

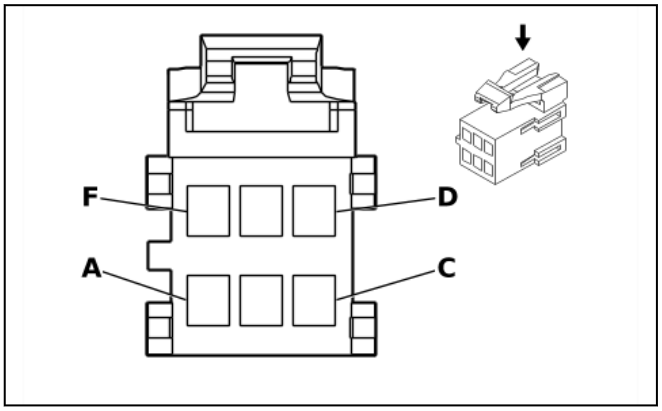

362753

Connector Part Information
- Harness Type: Instrument Panel Wiring Harness
- OEM Connector: 15305286
- Service Connector: 15306014
- Description: 6-Way F 150 Metri-Pack Series(YE)

Terminal Part Information

Terminal Type ID	Terminated Lead	Diagnostic Test Probe	Terminal Removal Tool
I	Not required	J-35616-14 (GN)	No Tool Required

S40 Passenger Air Bag Disable Switch

Pin	Size	Color	Circuit	Function	Terminal Type ID	Option
A	0.5	TN / BK	371	Passenger Supplemental Inflatable Restraint Disable Switch Signal	I	—
B	0.35	PK	1139	Run/Crank Ignition 1 Voltage	I	—
C	0.35	BU	2307	Passenger Air Bag On Indicator Control	I	—
D	0.5	PK	353	Passenger Supplemental Inflatable Restraint Suppression Indicator Control	I	—
E	0.5	BK / WH	1751	Signal Ground	I	—
F	0.35	GN	2308	Passenger Air Bag Off Indicator Control	I	—

S51 Telematics Button Assembly

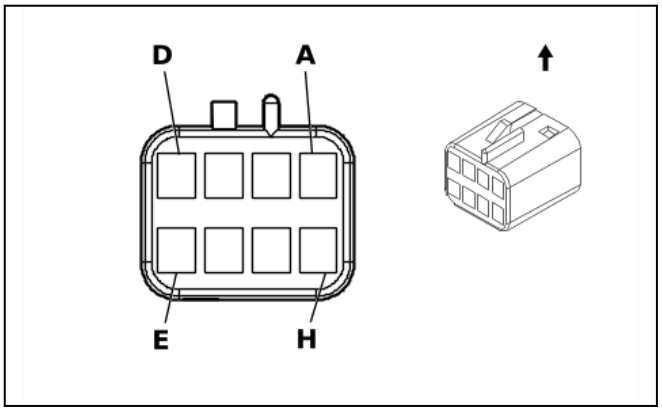

62439

Connector Part Information

- Harness Type: Instrument Panel Wiring Harness
- OEM Connector: 12047886
- Service Connector: 13584485
- Description: 8-Way F 150 Metri-Pack Series(BK)

Terminal Part Information

Terminal Type ID	Terminated Lead	Diagnostic Test Probe	Terminal Removal Tool
I	Not required	J-35616-14 (GN)	No Tool Required

S51 Telematics Button Assembly

Pin	Size	Color	Circuit	Function	Terminal Type ID	Option
A	0.75	GN / BK	2515	Telematics Switch Supply Voltage	I	—
B	0.75	GN / WH	2514	Telematics Switch Signal	I	—
C - D	—	—	—	Not Occupied	—	—
E	1	BK / WH	351	Signal Ground	I	—

Pin	Size	Color	Circuit	Function	Terminal Type ID	Option
F	0.75	YE / BK	2516	Telematics Switch Green LED Indicator Control	I	—
G	0.75	BN / WH	2517	Telematics Switch Red LED Indicator Control	I	—
H	—	—	—	Not Occupied	—	—

S52 Outside Rearview Mirror Switch

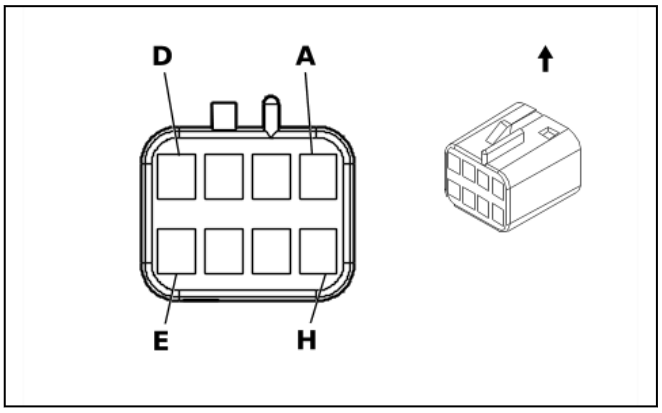

62439

Connector Part Information

- Harness Type: Front Side Door Door Wiring Harness - Driver
- OEM Connector: 12047886
- Service Connector: Service by Harness - See Part Catalog
- Description: 8-Way F 150 Metri-Pack Series(BK)

Terminal Part Information

Terminal Type ID	Terminated Lead	Diagnostic Test Probe	Terminal Removal Tool
I	Not required	J-35616-14 (GN)	No Tool Required
II	Not required	No Tool Required	No Tool Required

S52 Outside Rearview Mirror Switch

Pin	Size	Color	Circuit	Function	Terminal Type ID	Option
A	—	OG / WH	881	Right Outside Rearview Mirror Motor Right Control	II	—
B	—	PU / WH	889	Right Outside Rearview Mirror Motor Down Control	II	—
C	—	BN / WH	1498	Right Outside Rearview Mirror Motor Up Control	II	—
D	0.5	BK	450	Ground	I	—
E	—	RD / WH	4340	Battery Positive Voltage	II	—
F	0.35	GN	89	Left Outside Rearview Mirror Motor Down Control	I	—
G	0.35	WH	81	Left Outside Rearview Mirror Motor Right Control	I	—
H	—	YE	88	Left Outside Rearview Mirror Motor Up Control	II	—

S64D Seat Adjuster Switch - Driver

—

Connector Part Information
- Harness Type: Rear Window Defogger Wiring Harness
- OEM Connector: Not Available
- Service Connector: Service by Harness - See Part Catalog
- Description: 8-Way

Terminal Part Information

Terminal Type ID	Terminated Lead	Diagnostic Test Probe	Terminal Removal Tool
I	Not required	No Tool Required	No Tool Required

S64D Seat Adjuster Switch - Driver

Pin	Size	Color	Circuit	Function	Terminal Type ID	Option
A	—	BU	283	Driver Seat Rear Vertical Motor Down Control	I	—
B	—	YE	282	Driver Seat Rear Vertical Motor Up Control	I	—
C	—	BK	450	Ground	I	—
D	—	TN	285	Driver Seat Horizontal Motor Forward Control	I	—
E	—	GN	284	Driver Seat Horizontal Motor Rearward Control	I	—
F	—	RD / WH	3540	Battery Positive Voltage	I	—
G	—	BU	287	Driver Seat Front Vertical Motor Down Control	I	—
H	—	GN	286	Driver Seat Front Vertical Motor Up Control	I	—

S64P Seat Adjuster Switch - Passenger

—

Connector Part Information
- Harness Type: Rear Window Defogger Wiring Harness
- OEM Connector: Not Available
- Service Connector: Service by Harness - See Part Catalog
- Description: 8-Way

Terminal Part Information

Terminal Type ID	Terminated Lead	Diagnostic Test Probe	Terminal Removal Tool
I	Not required	No Tool Required	No Tool Required

S64P Seat Adjuster Switch - Passenger

Pin	Size	Color	Circuit	Function	Terminal Type ID	Option
A	—	BU	289	Passenger Seat Rear Vertical Motor Down Control	I	—
B	—	YE	288	Passenger Seat Rear Vertical Motor Up Control	I	—
C	—	BK	1850	Ground	I	—
D	—	TN	296	Passenger Seat Horizontal Motor Forward Control	I	—
E	—	GN	290	Passenger Seat Horizontal Motor Rearward Control	I	—

Pin	Size	Color	Circuit	Function	Terminal Type ID	Option
F	—	RD / WH	3540	Battery Positive Voltage	I	—
G	—	BU	298	Passenger Seat Front Vertical Motor Down Control	I	—
H	—	GN	297	Passenger Seat Front Vertical Motor Up Control	I	—

S70L Steering Wheel Controls Switch - Left

—

Connector Part Information
- Harness Type: Rear Window Defogger Wiring Harness
- OEM Connector: Not Available
- Service Connector: Service by Harness - See Part Catalog
- Description: 5-Way

Terminal Part Information

Terminal Type ID	Terminated Lead	Diagnostic Test Probe	Terminal Removal Tool
I	Not required	No Tool Required	No Tool Required

S70L Steering Wheel Controls Switch - Left

Pin	Size	Color	Circuit	Function	Terminal Type ID	Option
(1) 1	(1) —	(1) PK	(1) 1444	(1) 12V Reference	(1) I	(1) —
(3) 3	(3) —	(3) GY	(3) 1884	(3) Cruise Control Set/Coast/Resume/Accelerate Switch Signal	(3) I	(3) —
(6) 6	(6) —	(6) BN	(6) 6136	(6) Control	(6) I	(6) —
(8) 8	(8) —	(8) BK	(8) 350	(8) Ground	(8) I	(8) —
(9) 9	(9) —	(9) GN / WH	(9) 7158	(9) Cruise Control Indicator Dimming Signal	(9) I	(9) —

S70R Steering Wheel Controls Switch - Right

—

Connector Part Information
- Harness Type: Rear Window Defogger Wiring Harness
- OEM Connector: Not Available
- Service Connector: Service by Harness - See Part Catalog
- Description: 4-Way

Terminal Part Information

Terminal Type ID	Terminated Lead	Diagnostic Test Probe	Terminal Removal Tool
I	Not required	No Tool Required	No Tool Required

S70R Steering Wheel Controls Switch - Right

Pin	Size	Color	Circuit	Function	Terminal Type ID	Option
(1) 1	(1) —	(1) BK	(1) 350	(1) Ground	(1) I	(1) —
(2) 2	(2) —	(2) BN	(2) 6136	(2) Control	(2) I	(2) —

Pin	Size	Color	Circuit	Function	Terminal Type ID	Option
(3) 3	(3) —	(3) PK	(3) 1444	(3) 12V Reference	(3) I	(3) —
(4) 4	(4) —	(4) GN	(4) 6818	(4) Steering Wheel Controls Signal 1	(4) I	(4) —

S74 Tow/Haul Mode Switch

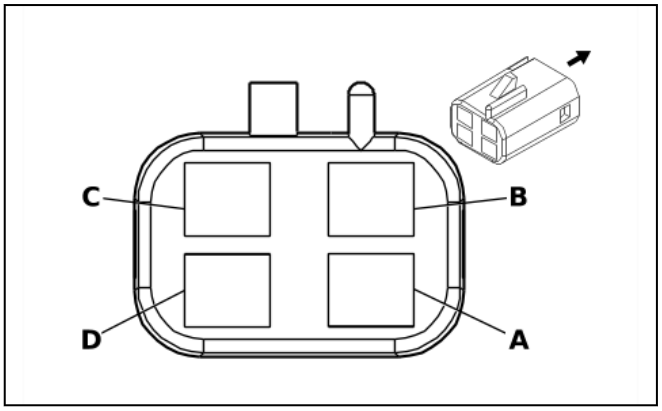

39660

Connector Part Information

- Harness Type: Instrument Panel Wiring Harness
- OEM Connector: 12047785
- Service Connector: 12102900
- Description: 4-Way F 150 Metri-Pack Series(BK)

Terminal Part Information

Terminal Type ID	Terminated Lead	Diagnostic Test Probe	Terminal Removal Tool
I	Not required	J-35616-14 (GN)	No Tool Required

S74 Tow/Haul Mode Switch

Pin	Size	Color	Circuit	Function	Terminal Type ID	Option
A	0.5	BK / WH	351	Signal Ground	I	—
B	0.35	BN / WH	230	Instrument Panel Lamp Dimming Control	I	—
C	—	—	—	Not Occupied	—	—
D	0.35	BU	1788	Traction Control Switch Signal 1	I	—

S75 Traction Control Switch

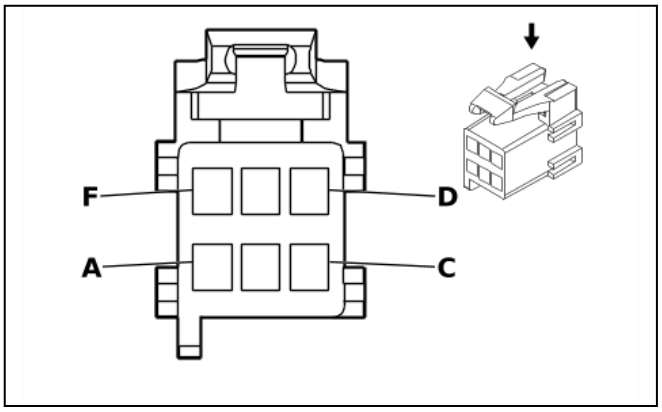

304345

Connector Part Information
- Harness Type: Instrument Panel Wiring Harness
- OEM Connector: 12177195
- Service Connector: 15305931
- Description: 6-Way F 150 Metri-Pack Series(BK)

Terminal Part Information

Terminal Type ID	Terminated Lead	Diagnostic Test Probe	Terminal Removal Tool
I	Not required	J-35616-14 (GN)	No Tool Required

S75 Traction Control Switch

Pin	Size	Color	Circuit	Function	Terminal Type ID	Option
A - B	—	—	—	Not Occupied	—	—
C	0.35	BK / WH	351	Signal Ground	I	—
D	0.35	BN / WH	230	Instrument Panel Lamp Dimming Control	I	—
E	—	—	—	Not Occupied	—	—
F	0.5	BU	6727	Vehicle Stability Control Switch Signal	I	—

S78 Turn Signal/Multifunction Switch X1

—

Connector Part Information
- Harness Type: Rear Window Defogger Wiring Harness
- OEM Connector: Not Available
- Service Connector: Service by Harness - See Part Catalog
- Description: 5-Way

Terminal Part Information

Terminal Type ID	Terminated Lead	Diagnostic Test Probe	Terminal Removal Tool
I	Not required	No Tool Required	No Tool Required

S78 Turn Signal/Multifunction Switch X1

Pin	Size	Color	Circuit	Function	Terminal Type ID	Option
C	—	BK / WH	351	Signal Ground	I	—
D	—	TN	664	Hazard Switch Right Turn Signal	I	—
E	—	GN	663	Hazard Switch Left Turn Signal	I	—
F	—	BK / WH	351	Signal Ground	I	—
G	—	WH	111	Hazard Warning Switch Signal	I	—

S78 Turn Signal/Multifunction Switch X2

—

Connector Part Information

- Harness Type: Rear Window Defogger Wiring Harness
- OEM Connector: Not Available
- Service Connector: Service by Harness - See Part Catalog
- Description: 3-Way

Terminal Part Information

Terminal Type ID	Terminated Lead	Diagnostic Test Probe	Terminal Removal Tool
I	Not required	No Tool Required	No Tool Required

S78 Turn Signal/Multifunction Switch X2

Pin	Size	Color	Circuit	Function	Terminal Type ID	Option
C	—	YE	525	High Beam Select Switch Low Beam Signal	I	—
D	—	BK / WH	351	Signal Ground	I	—
E	—	YE	307	Headlamp Switch Flash Signal	I	—

S78 Turn Signal/Multifunction Switch X3

—

Connector Part Information

- Harness Type: Rear Window Defogger Wiring Harness
- OEM Connector: Not Available
- Service Connector: Service by Harness - See Part Catalog
- Description: 4-Way

Terminal Part Information

Terminal Type ID	Terminated Lead	Diagnostic Test Probe	Terminal Removal Tool
I	Not required	No Tool Required	No Tool Required

S78 Turn Signal/Multifunction Switch X3

Pin	Size	Color	Circuit	Function	Terminal Type ID	Option
K	—	GN	1715	Windshield Wiper Switch High Signal	I	—
L	—	PK	94	Windshield Washer Switch Signal	I	—

Pin	Size	Color	Circuit	Function	Terminal Type ID	Option
M	—	TN / BK	6009	Windshield Wiper Switch Low Reference	I	—
N	—	BU	1714	Windshield Wiper Switch Low Signal	I	—

S79D Window Switch - Driver

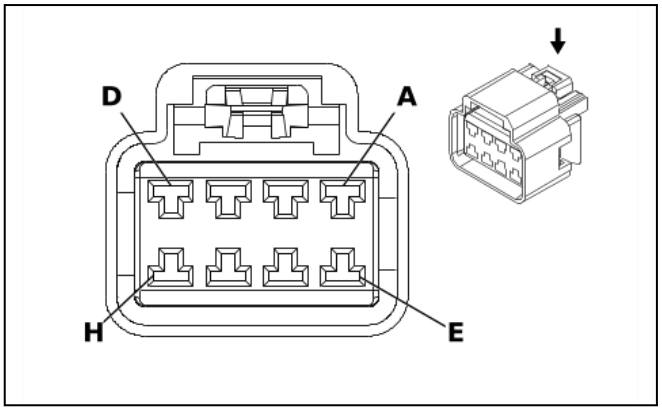

556473

Connector Part Information

- Harness Type: Front Side Door Door Wiring Harness - Driver
- OEM Connector: 15459914
- Service Connector: Service by Harness - See Part Catalog
- Description: 8-Way F 280 GT Series, Sealed(BK)

Terminal Part Information

Terminal Type ID	Terminated Lead	Diagnostic Test Probe	Terminal Removal Tool
I	Not required	J-35616-4A (PU)	No Tool Required

S79D Window Switch - Driver

Pin	Size	Color	Circuit	Function	Terminal Type ID	Option
A	3	BU	166	Right Front Window Up Switch Main Control Signal	I	—
B	0.35	BN / WH	230	Instrument Panel Lamp Dimming Control	I	—
C	3	GN	1001	Retained Accessory Power Ignition Voltage	I	—
D	3	TN	167	Right Front Window Down Switch Main Control Signal	I	—
E	—	—	—	Not Occupied	—	—
F	3	BK	450	Ground	I	—
G	3	BU	164	Left Front Window Motor Up Control	I	—
H	3	BN	165	Left Front Window Motor Down Control	I	—

S79P Window Switch - Passenger

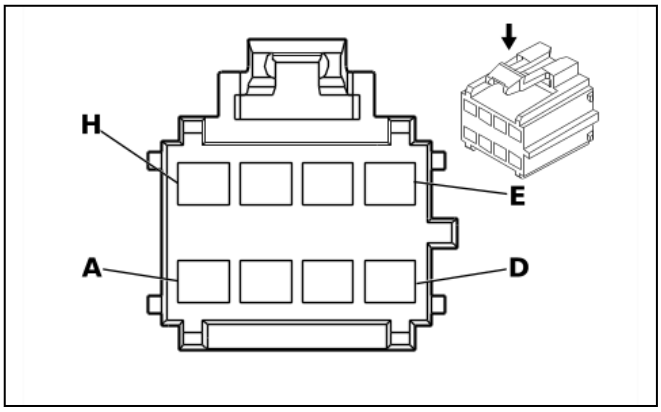

333036

Connector Part Information

- Harness Type: Front Side Door Door Wiring Harness - Passenger
- OEM Connector: 12191825
- Service Connector: Service by Harness - See Part Catalog
- Description: 8-Way F 280 Metri-Pack Series(BN)

Terminal Part Information

Terminal Type ID	Terminated Lead	Diagnostic Test Probe	Terminal Removal Tool
I	Not required	J-35616-4A (PU)	No Tool Required

S79P Window Switch - Passenger

Pin	Size	Color	Circuit	Function	Terminal Type ID	Option
A	3	GN	1001	Retained Accessory Power Ignition Voltage	I	—
B	0.35	BN / WH	230	Instrument Panel Lamp Dimming Control	I	—
C	0.35	BK	1850	Ground	I	—
D	3	TN	167	Right Front Window Down Switch Main Control Signal	I	—
E	—	—	—	Not Occupied	—	—
F	3	BN	667	Right Front Window Motor Down Control	I	—
G	3	BU	666	Right Front Window Motor Up Control	I	—
H	3	BU	166	Right Front Window Up Switch Main Control Signal	I	—

S85 Auxiliary Blower Motor Switch

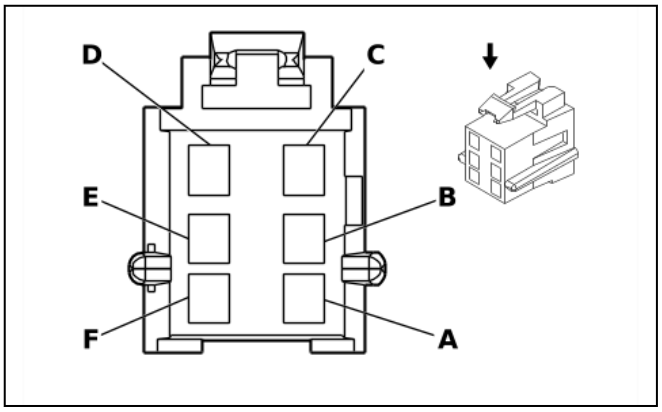

62456

Connector Part Information

- Harness Type: Auxiliary Heater Front Wiring Harness
- OEM Connector: 12064752
- Service Connector: Service by Harness - See Part Catalog
- Description: 6-Way F 280 Metri-Pack Series(BK)

Terminal Part Information

Terminal Type ID	Terminated Lead	Diagnostic Test Probe	Terminal Removal Tool
I	Not required	J-35616-4A (PU)	No Tool Required

S85 Auxiliary Blower Motor Switch

Pin	Size	Color	Circuit	Function	Terminal Type ID	Option
A	0.35	BN / WH	230	Instrument Panel Lamp Dimming Control	I	—
B	0.35	BK	450	Ground	I	—
C	—	—	—	Not Occupied	—	—
D	0.35	WH	1924	Auxiliary Blower Motor High Speed Control	I	—
E	0.35	BU	1926	Auxiliary Blower Motor Low Speed Control 2	I	—
F	0.35	OG	1925	Auxiliary Blower Motor Medium Speed Control 2	I	—

S155 Lane Departure Warning Switch

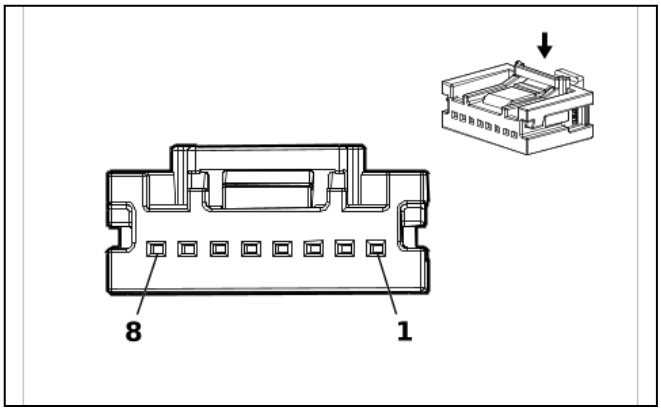

4017639

Connector Part Information

- Harness Type: Instrument Panel Wiring Harness
- OEM Connector: 34791-5180
- Service Connector: 19354223
- Description: 8-Way F Mini 50 Series(BK)

Terminal Part Information

Terminal Type ID	Terminated Lead	Diagnostic Test Probe	Terminal Removal Tool
I	Not required	EL-35616-58 (BK)	No Tool Required

S155 Lane Departure Warning Switch

Pin	Size	Color	Circuit	Function	Terminal Type ID	Option
(1) 1	(1) 0.35	(1) YE / GY	(1) 1382	(1) LED Dimming Signal	(1) I	(1) —
2 - 3	—	—	—	Not Occupied	—	—
(4) 4	(4) 0.35	(4) GY / WH	(4) 3153	(4) Lane Departure Warning Disable Switch Signal	(4) I	(4) —
(5) 5	(5) 0.35	(5) WH	(5) 6816	(5) Indicator Dimming Control	(5) I	(5) —
6	—	—	—	Not Occupied	—	—
(7) 7	(7) 0.35	(7) WH	(7) 3152	(7) Lane Departure Warning Indicator Control	(7) I	(7) —
(8) 8	(8) 0.35	(8) BK / WH	(8) 2151	(8) Signal Ground	(8) I	(8) —

T1 Accessory DC/AC Power Inverter Module

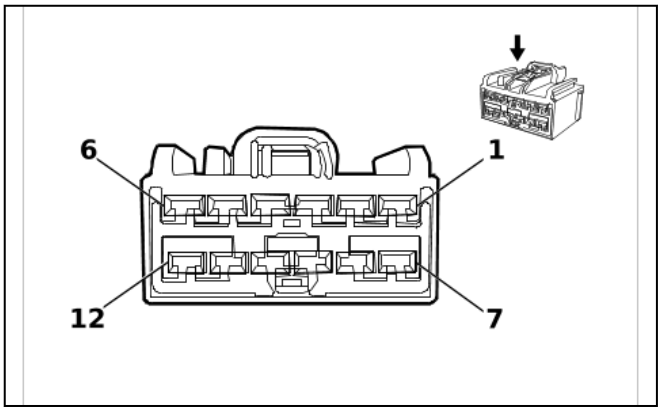

2231648

Connector Part Information
- Harness Type: Instrument Panel Wiring Harness
- OEM Connector: 7283-6467-40
- Service Connector: 13580444
- Description: 12-Way F 2.8 Kaizen Series(L-GY)

Terminal Part Information

Terminal Type ID	Terminated Lead	Diagnostic Test Probe	Terminal Removal Tool
I	19301761	J-35616-4A (PU)	J-38125-215A
II	19368264	J-35616-4A (PU)	J-38125-11A

T1 Accessory DC/AC Power Inverter Module

Pin	Size	Color	Circuit	Function	Terminal Type ID	Option
1	—	—	—	Not Occupied	—	—
(2) 2	(2) 1	(2) BK	(2) 5683	(2) 120V AC Phase A	(2) II	(2) —
3 - 5	—	—	—	Not Occupied	—	—
(6) 6	(6) 3	(6) RD / WH	(6) 4140	(6) Battery Positive Voltage	(6) I	(6) —
(7) 7	(7) 1	(7) WH	(7) 5685	(7) 120V AC Neutral	(7) II	(7) —
8 - 9	—	—	—	Not Occupied	—	—
(10) 10	(10) 0.5	(10) BARE	(10) 514	(10) Low Reference	(10) II	(10) —
(11) 11	(11) 3	(11) BK	(11) 550	(11) Ground	(11) I	(11) —
(12) 12	(12) 0.35	(12) GN	(12) 2266	(12) DC/AC Inverter Control 2	(12) II	(12) —

T2RF Antenna - Roof Front

—

Connector Part Information
- Harness Type: Rear Window Defogger Wiring Harness
- OEM Connector: Not Available
- Service Connector: Service by Harness - See Part Catalog
- Description: 2-Way

Terminal Part Information

Terminal Type ID	Terminated Lead	Diagnostic Test Probe	Terminal Removal Tool
I	Not required	No Tool Required	No Tool Required

T2RF Antenna - Roof Front

Pin	Size	Color	Circuit	Function	Terminal Type ID	Option
(1) 1	(1) —	(1) —	(1) Coax Cable	(1) Coax Cable	(1) I	(1) —
(2) 2	(2) —	(2) —	(2) Coax Cable	(2) Coax Cable	(2) I	(2) —

T4M Radio Antenna

—

Connector Part Information

- Harness Type: Rear Window Defogger Wiring Harness
- OEM Connector: Not Available
- Service Connector: Service by Harness - See Part Catalog
- Description: 1-Way

Terminal Part Information

Terminal Type ID	Terminated Lead	Diagnostic Test Probe	Terminal Removal Tool
I	Not required	No Tool Required	No Tool Required

T4M Radio Antenna

Pin	Size	Color	Circuit	Function	Terminal Type ID	Option
BK	—	—	Coax Cable	Coax Cable	I	—

T8A Ignition Coil 1

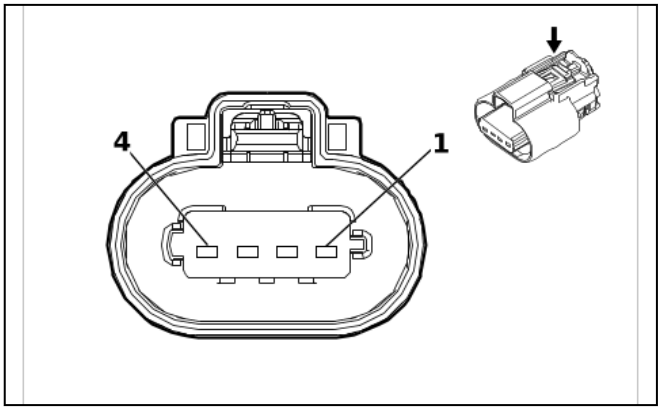

3240115

Connector Part Information

- Harness Type: Engine Wiring Harness
- OEM Connector: 34770-0402
- Service Connector: 19367596
- Description: 4-Way F 1.5 MX Series, Sealed(BK)

Terminal Part Information

Terminal Type ID	Terminated Lead	Diagnostic Test Probe	Terminal Removal Tool
I	Not required	J-35616-2A (GY)	No Tool Required

T8A Ignition Coil 1

Pin	Size	Color	Circuit	Function	Terminal Type ID	Option
(1) 1	(1) 0.75	(1) BK	(1) 350	(1) Ground	(1) I	(1) —
(2) 2	(2) 0.5	(2) BK / BU	(2) 2129	(2) Ignition Control Low Reference Bank 1	(2) I	(2) —
(3) 3	(3) 0.5	(3) BU / VT	(3) 2121	(3) Ignition Control 1	(3) I	(3) —
(4) 4	(4) 0.75	(4) VT / BU	(4) 5291	(4) Powertrain Main Relay Fused Supply Voltage 2	(4) I	(4) —

T8B Ignition Coil 2

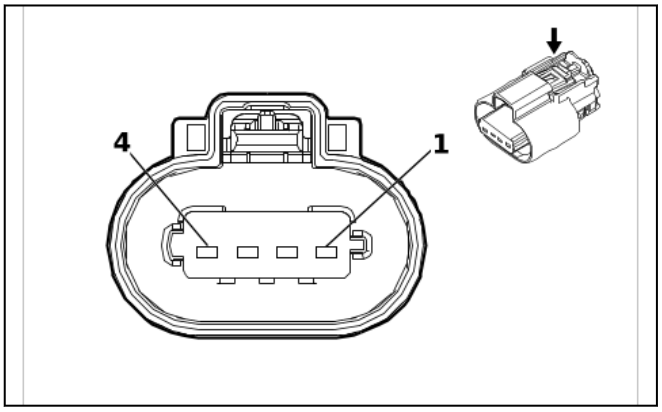

3240115

Connector Part Information

- Harness Type: Engine Wiring Harness
- OEM Connector: 34770-0402
- Service Connector: 19367596
- Description: 4-Way F 1.5 MX Series, Sealed(BK)

Terminal Part Information

Terminal Type ID	Terminated Lead	Diagnostic Test Probe	Terminal Removal Tool
I	Not required	J-35616-2A (GY)	No Tool Required

T8B Ignition Coil 2

Pin	Size	Color	Circuit	Function	Terminal Type ID	Option
(1) 1	(1) 0.75	(1) BK	(1) 350	(1) Ground	(1) I	(1) —
(2) 2	(2) 0.5	(2) BK / GY	(2) 2130	(2) Ignition Control Low Reference Bank 2	(2) I	(2) —
(3) 3	(3) 0.5	(3) BU / WH	(3) 2122	(3) Ignition Control 2	(3) I	(3) —
(4) 4	(4) 0.75 (4) 0.75	(4) VT / BU (4) VT / BK	(4) 5292 (4) 1239	(4) Powertrain Main Relay Fused Supply Voltage 3 (4) Run/Crank Ignition 1 Voltage	(4) I (4) I	(4) L8T (4) LVI

T8C Ignition Coil 3

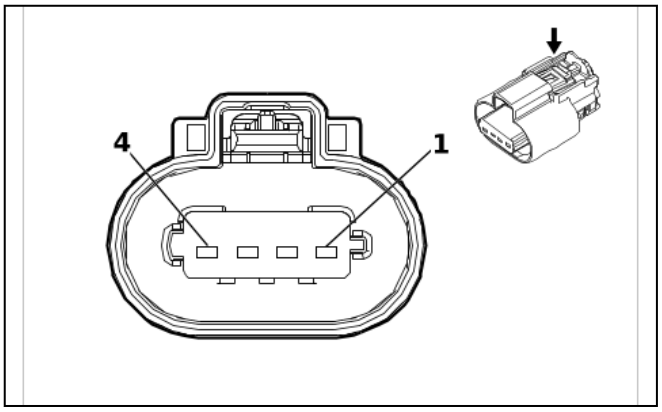

3240115

Connector Part Information

- Harness Type: Engine Wiring Harness
- OEM Connector: 34770-0402
- Service Connector: 19367596
- Description: 4-Way F 1.5 MX Series, Sealed(BK)

Terminal Part Information

Terminal Type ID	Terminated Lead	Diagnostic Test Probe	Terminal Removal Tool
I	Not required	J-35616-2A (GY)	No Tool Required

T8C Ignition Coil 3

Pin	Size	Color	Circuit	Function	Terminal Type ID	Option
(1) 1	(1) 0.75	(1) BK	(1) 350	(1) Ground	(1) I	(1) —
(2) 2	(2) 0.5	(2) BK / BU	(2) 2129	(2) Ignition Control Low Reference Bank 1	(2) I	(2) —
(3) 3	(3) 0.5	(3) GN / BU	(3) 2123	(3) Ignition Control 3	(3) I	(3) —
(4) 4	(4) 0.75	(4) VT / BU	(4) 5291	(4) Powertrain Main Relay Fused Supply Voltage 2	(4) I	(4) —

T8D Ignition Coil 4

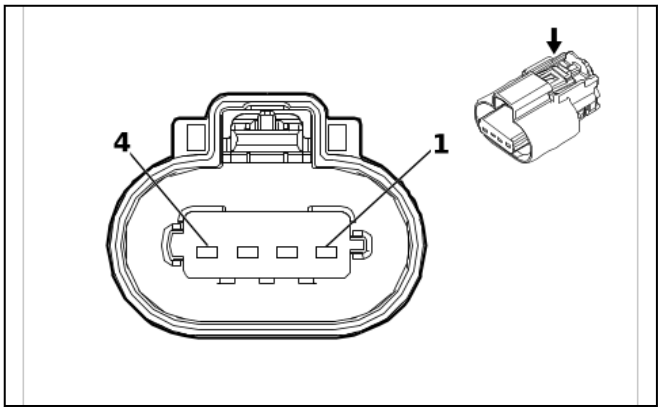

3240115

Connector Part Information

- Harness Type: Engine Wiring Harness
- OEM Connector: 34770-0402
- Service Connector: 19367596
- Description: 4-Way F 1.5 MX Series, Sealed(BK)

Terminal Part Information

Terminal Type ID	Terminated Lead	Diagnostic Test Probe	Terminal Removal Tool
I	Not required	J-35616-2A (GY)	No Tool Required

T8D Ignition Coil 4

Pin	Size	Color	Circuit	Function	Terminal Type ID	Option
(1) 1	(1) 0.75	(1) BK	(1) 350	(1) Ground	(1) I	(1) —
(2) 2	(2) 0.5	(2) BK / GY	(2) 2130	(2) Ignition Control Low Reference Bank 2	(2) I	(2) —
(3) 3	(3) 0.5	(3) YE / BU	(3) 2124	(3) Ignition Control 4	(3) I	(3) —
(4) 4	(4) 0.75 (4) 0.75	(4) VT / BU (4) VT / BK	(4) 5292 (4) 1239	(4) Powertrain Main Relay Fused Supply Voltage 3 (4) Run/Crank Ignition 1 Voltage	(4) I (4) I	(4) L8T (4) LV1

T8E Ignition Coil 5

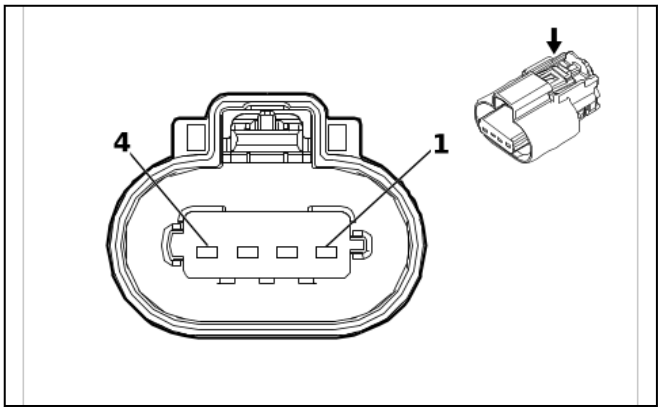

3240115

Connector Part Information

- Harness Type: Engine Wiring Harness
- OEM Connector: 34770-0402
- Service Connector: 19367596
- Description: 4-Way F 1.5 MX Series, Sealed(BK)

Terminal Part Information

Terminal Type ID	Terminated Lead	Diagnostic Test Probe	Terminal Removal Tool
I	Not required	J-35616-2A (GY)	No Tool Required

T8E Ignition Coil 5

Pin	Size	Color	Circuit	Function	Terminal Type ID	Option
(1) 1	(1) 0.75	(1) BK	(1) 350	(1) Ground	(1) I	(1) —
(2) 2	(2) 0.5	(2) BK / BU	(2) 2129	(2) Ignition Control Low Reference Bank 1	(2) I	(2) —
(3) 3	(3) 0.5	(3) BU / GY	(3) 2125	(3) Ignition Control 5	(3) I	(3) —
(4) 4	(4) 0.75	(4) VT / BU	(4) 5291	(4) Powertrain Main Relay Fused Supply Voltage 2	(4) I	(4) —

T8F Ignition Coil 6

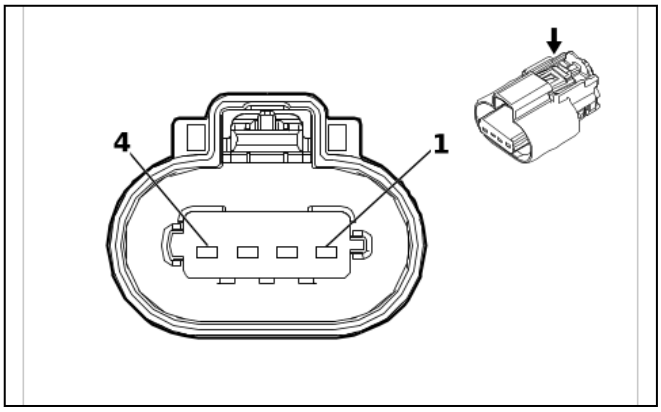

3240115

Connector Part Information

- Harness Type: Engine Wiring Harness
- OEM Connector: 34770-0402
- Service Connector: 19367596
- Description: 4-Way F 1.5 MX Series, Sealed(BK)

Terminal Part Information

Terminal Type ID	Terminated Lead	Diagnostic Test Probe	Terminal Removal Tool
I	Not required	J-35616-2A (GY)	No Tool Required

T8F Ignition Coil 6

Pin	Size	Color	Circuit	Function	Terminal Type ID	Option
(1) 1	(1) 0.75	(1) BK	(1) 350	(1) Ground	(1) I	(1) —
(2) 2	(2) 0.5	(2) BK / GY	(2) 2130	(2) Ignition Control Low Reference Bank 2	(2) I	(2) —
(3) 3	(3) 0.5	(3) BN / BU	(3) 2126	(3) Ignition Control 6	(3) I	(3) —
(4) 4	(4) 0.75 (4) 0.75	(4) VT / BU (4) VT / BK	(4) 5292 (4) 1239	(4) Powertrain Main Relay Fused Supply Voltage 3 (4) Run/Crank Ignition 1 Voltage	(4) I (4) I	(4) L8T (4) LVI

T8G Ignition Coil 7

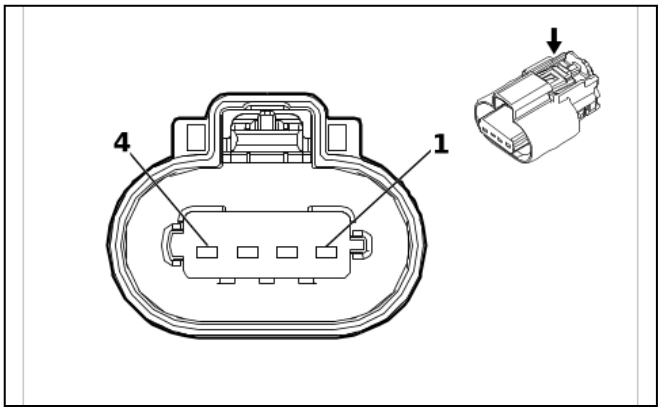

3240115

Connector Part Information

- Harness Type: Engine Wiring Harness
- OEM Connector: 34770-0402
- Service Connector: 19367596
- Description: 4-Way F 1.5 MX Series, Sealed(BK)

Terminal Part Information

Terminal Type ID	Terminated Lead	Diagnostic Test Probe	Terminal Removal Tool
I	Not required	J-35616-2A (GY)	No Tool Required

T8G Ignition Coil 7

Pin	Size	Color	Circuit	Function	Terminal Type ID	Option
(1) 1	(1) 0.75	(1) BK	(1) 350	(1) Ground	(1) I	(1) —
(2) 2	(2) 0.5	(2) BK / BU	(2) 2129	(2) Ignition Control Low Reference Bank 1	(2) I	(2) —
(3) 3	(3) 0.5	(3) GN / GY	(3) 2127	(3) Ignition Control 7	(3) I	(3) —
(4) 4	(4) 0.75	(4) VT / BU	(4) 5291	(4) Powertrain Main Relay Fused Supply Voltage 2	(4) I	(4) —

T8H Ignition Coil 8

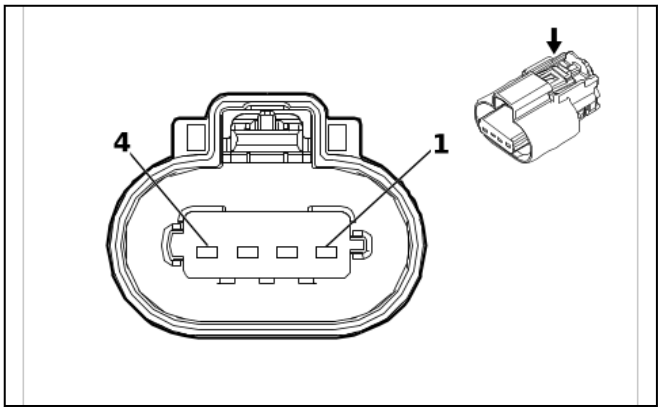

3240115

Connector Part Information

- Harness Type: Engine Wiring Harness
- OEM Connector: 34770-0402
- Service Connector: 19367596
- Description: 4-Way F 1.5 MX Series, Sealed(BK)

Terminal Part Information

Terminal Type ID	Terminated Lead	Diagnostic Test Probe	Terminal Removal Tool
I	Not required	J-35616-2A (GY)	No Tool Required

T8H Ignition Coil 8

Pin	Size	Color	Circuit	Function	Terminal Type ID	Option
(1) 1	(1) 0.75	(1) BK	(1) 350	(1) Ground	(1) I	(1) —
(2) 2	(2) 0.5	(2) BK / GY	(2) 2130	(2) Ignition Control Low Reference Bank 2	(2) I	(2) —
(3) 3	(3) 0.5	(3) VT / WH	(3) 2128	(3) Ignition Control 8	(3) I	(3) —
(4) 4	(4) 0.75	(4) VT / BU	(4) 5292	(4) Powertrain Main Relay Fused Supply Voltage 3	(4) I	(4) —

X80A Accessory Power Receptacle - Center Console 1

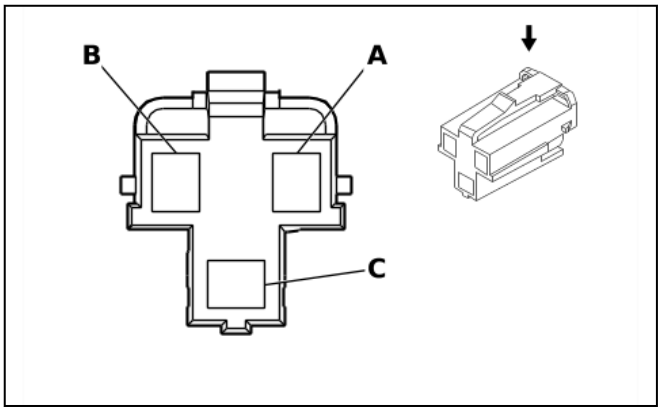

362748

Connector Part Information
- Harness Type: Instrument Panel Wiring Harness
- OEM Connector: 12176836
- Service Connector: 19369281
- Description: 3-Way F 280 Metri-Pack Series(GY)

Terminal Part Information

Terminal Type ID	Terminated Lead	Diagnostic Test Probe	Terminal Removal Tool
I	Not required	J-35616-4A (PU)	No Tool Required

X80A Accessory Power Receptacle - Center Console 1

Pin	Size	Color	Circuit	Function	Terminal Type ID	Option
A	1	RD / WH	640	Battery Positive Voltage	I	—
B	—	—	—	Not Occupied	—	—
C	1	BK	550	Ground	I	—

X80B Accessory Power Receptacle - Center Console 2

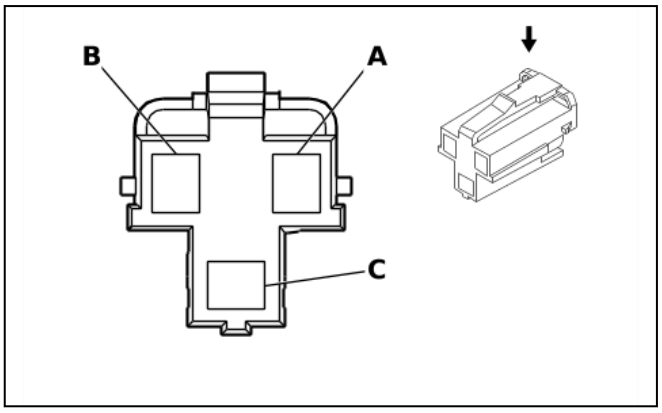

362748

Connector Part Information
- Harness Type: Instrument Panel Wiring Harness
- OEM Connector: 12176836
- Service Connector: 19369281
- Description: 3-Way F 280 Metri-Pack Series(GY)

Terminal Part Information

Terminal Type ID	Terminated Lead	Diagnostic Test Probe	Terminal Removal Tool
I	Not required	J-35616-4A (PU)	No Tool Required

X80B Accessory Power Receptacle - Center Console 2

Pin	Size	Color	Circuit	Function	Terminal Type ID	Option
A	1	RD / WH	1040	Battery Positive Voltage	I	—
B	—	—	—	Not Occupied	—	—
C	1	BK	550	Ground	I	—

X81 Accessory Power Receptacle - 110V AC X1

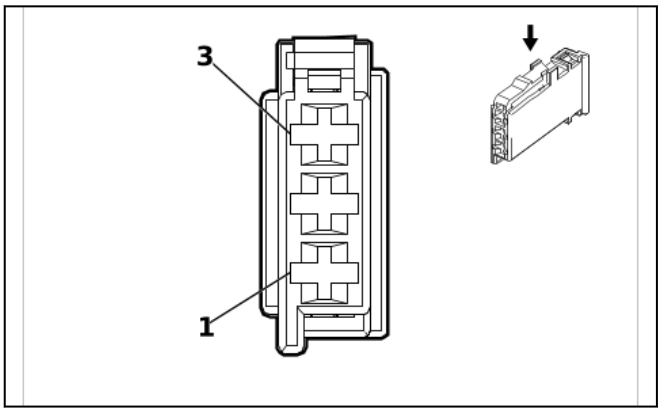

2039656

Connector Part Information

- Harness Type: Instrument Panel Wiring Harness
- OEM Connector: 1452142-1
- Service Connector: 86790560
- Description: 3-Way F 1.6 Micro-Timer Series(BK)

Terminal Part Information

Terminal Type ID	Terminated Lead	Diagnostic Test Probe	Terminal Removal Tool
I	Not required	J-35616-14 (GN)	No Tool Required

X81 Accessory Power Receptacle - 110V AC X1

Pin	Size	Color	Circuit	Function	Terminal Type ID	Option
(1) 1	(1) 0.5	(1) BU	(1) 6807	(1) DC/AC Inverter Control	(1) I	(1) —
2	—	—	—	Not Occupied	—	—
(3) 3	(3) 1	(3) BK	(3) 5683	(3) 120V AC Phase A	(3) I	(3) —

X81 Accessory Power Receptacle - 110V AC X2

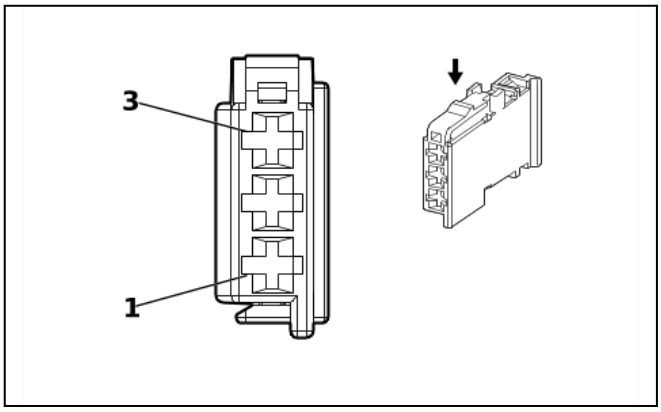

2236412

Connector Part Information
- Harness Type: Instrument Panel Wiring Harness
- OEM Connector: 0-1452142-2
- Service Connector: 19367740
- Description: 3-Way F 1.6 Timer Series(GY)

Terminal Part Information

Terminal Type ID	Terminated Lead	Diagnostic Test Probe	Terminal Removal Tool
I	Not required	J-35616-14 (GN)	No Tool Required

X81 Accessory Power Receptacle - 110V AC X2

Pin	Size	Color	Circuit	Function	Terminal Type ID	Option
(1) 1	(1) 0.35	(1) GN	(1) 2266	(1) DC/AC Inverter Control 2	(1) I	(1) —
2	—	—	—	Not Occupied	—	—
(3) 3	(3) 1	(3) WH	(3) 5685	(3) 120V AC Neutral	(3) I	(3) —

X84 Data Link Connector

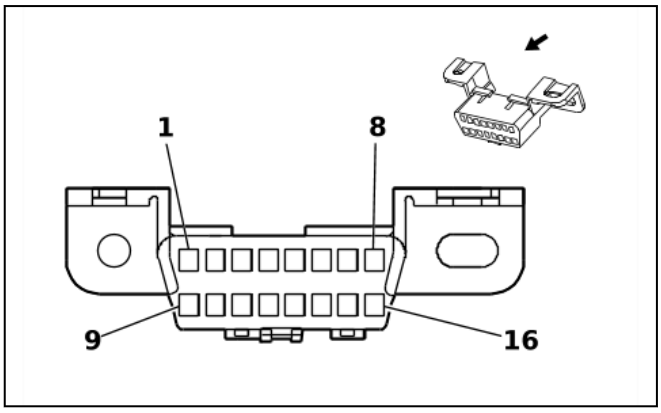

68793

Connector Part Information
- Harness Type: Instrument Panel Wiring Harness
- OEM Connector: 12110250
- Service Connector: 12110250
- Description: 16-Way F 150 Metri-Pack Series(BK)

Terminal Part Information

Terminal Type ID	Terminated Lead	Diagnostic Test Probe	Terminal Removal Tool
I	13580059	J-35616-14 (GN)	J-38125-12A

X84 Data Link Connector

Pin	Size	Color	Circuit	Function	Terminal Type ID	Option
(1) 1	(1) 0.35	(1) GN	(1) 5060	(1) Low Speed GMLAN Serial Data	(1) I	(1) —
2 - 3	—	—	—	Not Occupied	—	—
(4) 4	(4) 0.5	(4) BK / WH	(4) 351	(4) Signal Ground	(4) I	(4) —
(5) 5	(5) 0.5	(5) BK / WH	(5) 351	(5) Signal Ground	(5) I	(5) —
(6) 6	(6) 0.5	(6) BU	(6) 2500	(6) High Speed GMLAN Serial Data [+] 1	(6) I	(6) —
7 - 13	—	—	—	Not Occupied	—	—
(14) 14	(14) 0.5	(14) WH	(14) 2501	(14) High Speed GMLAN Serial Data [-] 1	(14) I	(14) —
15	—	—	—	Not Occupied	—	—
(16) 16	(16) 0.75	(16) RD / WH	(16) 640	(16) Battery Positive Voltage	(16) I	(16) —

X85 Steering Wheel Air Bag Coil X1

—

Connector Part Information

- Harness Type: Rear Window Defogger Wiring Harness
- OEM Connector: Not Available
- Service Connector: Service by Harness - See Part Catalog
- Description: 7-Way

Terminal Part Information

Terminal Type ID	Terminated Lead	Diagnostic Test Probe	Terminal Removal Tool
I	Not required	No Tool Required	No Tool Required

X85 Steering Wheel Air Bag Coil X1

Pin	Size	Color	Circuit	Function	Terminal Type ID	Option
A	—	BK	350	Ground	I	—
B	—	TN	28	Horn Relay Control	I	—
C	—	GN / WH	7158	Cruise Control Indicator Dimming Signal	I	—
F	—	PK	1444	12V Reference	I	—
G	—	BN	6136	Control	I	—
H	—	GN	6818	Steering Wheel Controls Signal 1	I	—
K	—	GY	1884	Cruise Control Set/Coast/Resume/Accelerate Switch Signal	I	—

X85 Steering Wheel Air Bag Coil X2

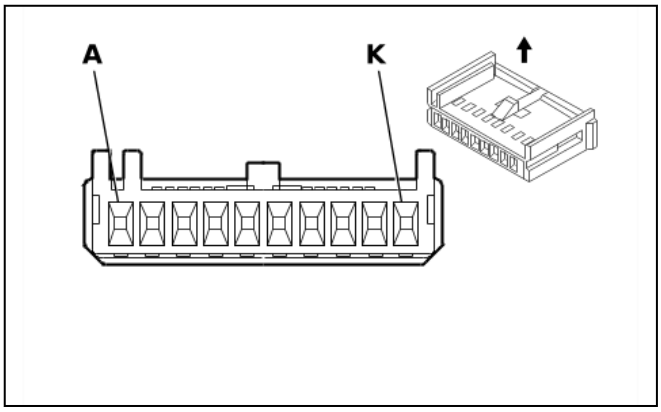

1593397

Connector Part Information

- Harness Type: Steering Wheel Pad Accessory Wiring Harness
- OEM Connector: 15393433
- Service Connector: Service by Harness - See Part Catalog
- Description: 10-Way F 0.64 Micro-Pack Series(BK)

Terminal Part Information

Terminal Type ID	Terminated Lead	Diagnostic Test Probe	Terminal Removal Tool
I	Not required	J-35616-64B (L-BU)	No Tool Required

X85 Steering Wheel Air Bag Coil X2

Pin	Size	Color	Circuit	Function	Terminal Type ID	Option
A	22	GY	1884	Cruise Control Set/Coast/Resume/Accelerate Switch Signal	I	—
B	—	—	—	Not Occupied	—	—
C	22	GN	6818	Steering Wheel Controls Signal 1	I	—
D	22	BN	6136	Control	I	—
E	22	PK	1444	12V Reference	I	—
F - G	—	—	—	Not Occupied	—	—
H	22	GN / WH	7158	Cruise Control Indicator Dimming Signal	I	—
J	22	TN	28	Horn Relay Control	I	—
K	22	BK	350	Ground	I	—

X85 Steering Wheel Air Bag Coil X3

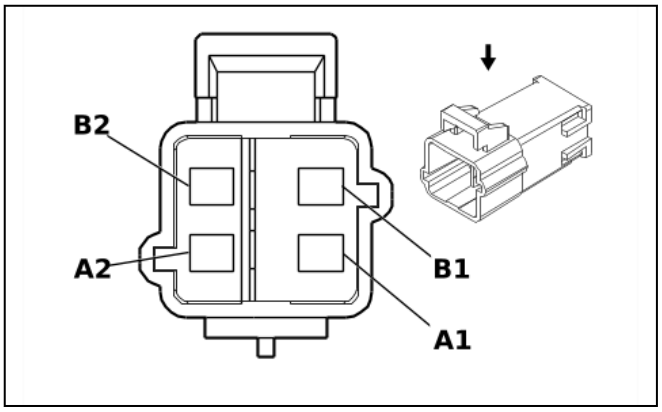

684931

Connector Part Information
- Harness Type: Instrument Panel Wiring Harness
- OEM Connector: 15336476
- Service Connector: 88987998
- Description: 4-Way M 280 Metri-Pack Series(YE)

Terminal Part Information

Terminal Type ID	Terminated Lead	Diagnostic Test Probe	Terminal Removal Tool
I	Not required	J-35616-5 (PU)	No Tool Required

X85 Steering Wheel Air Bag Coil X3

Pin	Size	Color	Circuit	Function	Terminal Type ID	Option
A1	0.5	TN	3021	Steering Wheel Air Bag Stage 1 High Control	I	—
A2	0.5	BN	3020	Steering Wheel Air Bag Stage 1 Low Control	I	—
B1 - B2	—	—	—	Not Occupied	—	—

X87RB Sliding Door Jamb Contact Plate - Right Body - Cutaway

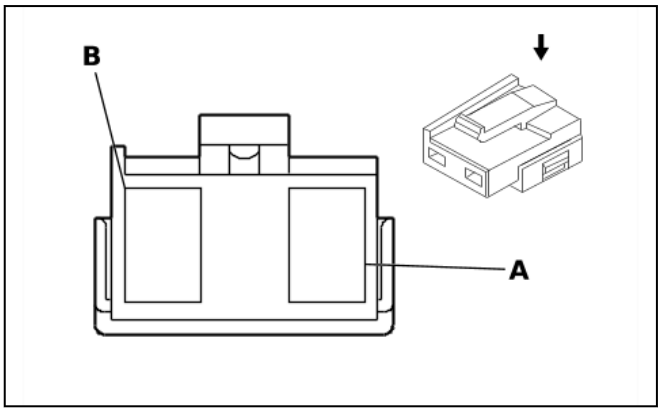

38274

Connector Part Information
- Harness Type: Rear Side Door Wiring Harness
- OEM Connector: 33148350
- Service Connector: Service by Harness - See Part Catalog
- Description: Striker Plate

Terminal Part Information

Terminal Type ID	Terminated Lead	Diagnostic Test Probe	Terminal Removal Tool
I	Not required	J-35616-43 (RD)	No Tool Required

X87RB Sliding Door Jamb Contact Plate - Right Body - Cutaway

Pin	Size	Color	Circuit	Function	Terminal Type ID	Option
A	0.75	TN	294	Door Lock Actuator Unlock Control	I	—
B	1	GY	295	Door Lock Actuator Lock Control	I	—

X87RB Sliding Door Jamb Contact Plate - Right Body - (Cargo / Passenger)

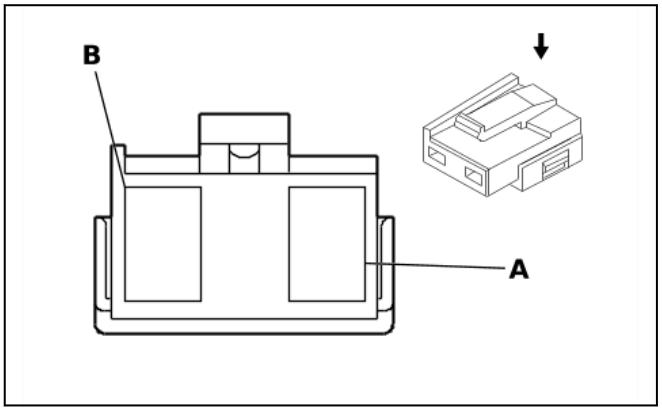

38274

Connector Part Information

- Harness Type: Body Wiring Harness
- OEM Connector: 12034343
- Service Connector: 12101821
- Description: 2-Way F 280 Metri-Pack Series(BK)

Terminal Part Information

Terminal Type ID	Terminated Lead	Diagnostic Test Probe	Terminal Removal Tool
I	Not required	J-35616-4A (PU)	No Tool Required

X87RB Sliding Door Jamb Contact Plate - Right Body - (Cargo / Passenger)

Pin	Size	Color	Circuit	Function	Terminal Type ID	Option
A	0.75	TN	294	Door Lock Actuator Unlock Control	I	—
B	1	GY	295	Door Lock Actuator Lock Control	I	—

X88 Trailer Connector

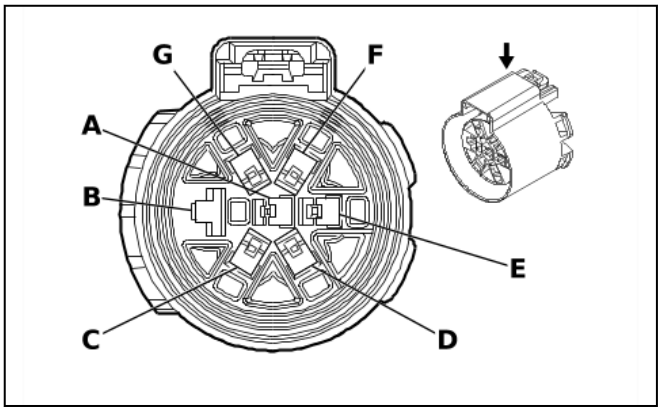

2056936

Connector Part Information

- Harness Type: Chassis Wiring Harness
- OEM Connector: 13857223
- Service Connector: Service by Harness - See Part Catalog
- Description: 7-Way F 280, 630 Metri-Pack Series, Sealed(BK)

Terminal Part Information

Terminal Type ID	Terminated Lead	Diagnostic Test Probe	Terminal Removal Tool
I	Not required	J-35616-42 (RD)	No Tool Required
II	Not required	J-35616-4A (PU)	No Tool Required

X88 Trailer Connector

Pin	Size	Color	Circuit	Function	Terminal Type ID	Option
A	1	GN	1624	Trailer Backup Lamp Control	II	—
B	8	WH	22	Trailer Ground	I	—
C	3	BU	47	Trailer Auxiliary Control	II	—
D	1	GN	1619	Right Rear Trailer Stop/Turn Lamp Control	II	—
E	3	RD / BK	742	Battery Positive Voltage	II	—
F	1	BN	2109	Trailer Park Lamp Control	II	—
G	1	YE	1618	Left Rear Trailer Stop/Turn Lamp Control	II	—

JX200 Splice Pack

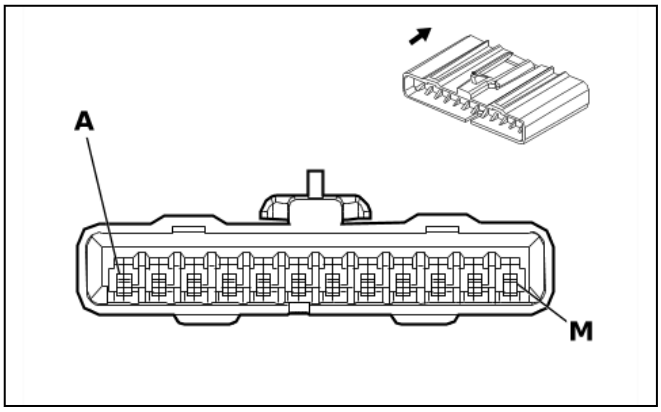

966355

Connector Part Information

- Harness Type: Instrument Panel Wiring Harness
- OEM Connector: 12176461
- Service Connector: 15305914
- Description: 12-Way F 150 GT Series(BK)

Terminal Part Information

Terminal Type ID	Terminated Lead	Diagnostic Test Probe	Terminal Removal Tool
I	13591480	J-35616-14 (GN)	J-38125-215A

JX200 Splice Pack

Pin	Size	Color	Circuit	Function	Terminal Type ID	Option
A	0.35	GN	5060	Low Speed GMLAN Serial Data	I	—
B	0.35	GN	5060	Low Speed GMLAN Serial Data	I	—
C	0.35	GN	5060	Low Speed GMLAN Serial Data	I	—
D	0.35	GN	5060	Low Speed GMLAN Serial Data	I	—
E	0.35	GN	5060	Low Speed GMLAN Serial Data	I	—
F	0.35	GN	5060	Low Speed GMLAN Serial Data	I	—
G	0.35	GN	5060	Low Speed GMLAN Serial Data	I	—
H	0.35	GN	5060	Low Speed GMLAN Serial Data	I	—
J	0.5	GN	5060	Low Speed GMLAN Serial Data	I	—
K	0.5	GN	5060	Low Speed GMLAN Serial Data	I	—
L	0.5	GN	5060	Low Speed GMLAN Serial Data	I	—
M	—	—	—	Not Occupied	—	—

JX250 Splice Pack

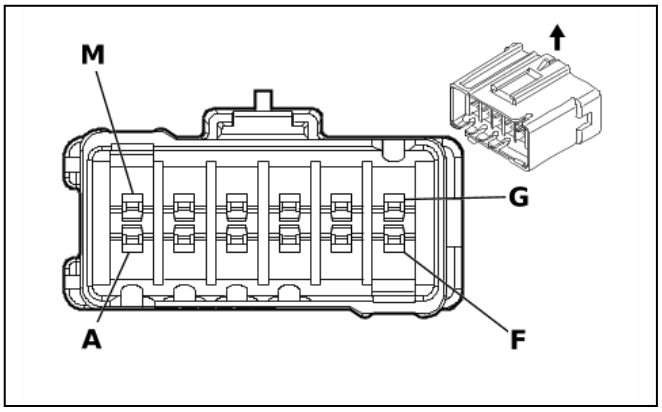

803605

Connector Part Information

- Harness Type: Instrument Panel Wiring Harness
- OEM Connector: 15305288
- Service Connector: 12167610
- Description: 12-Way F 280 Metri-Pack Series(BK)

Terminal Part Information

Terminal Type ID	Terminated Lead	Diagnostic Test Probe	Terminal Removal Tool
I	13575721	J-35616-4A (PU)	J-38125-553

JX250 Splice Pack

Pin	Size	Color	Circuit	Function	Terminal Type ID	Option
A	0.5	BU	2500	High Speed GMLAN Serial Data [+] 1	I	—
B	0.5	BU	2500	High Speed GMLAN Serial Data [+] 1	I	—
C	0.5	BU	2500	High Speed GMLAN Serial Data [+] 1	I	—
D - J	—	—	—	Not Occupied	—	—
K	0.5	WH	2501	High Speed GMLAN Serial Data [-] 1	I	—
L	0.5	WH	2501	High Speed GMLAN Serial Data [-] 1	I	—
M	0.5	WH	2501	High Speed GMLAN Serial Data [-] 1	I	—

JX347 Splice Pack

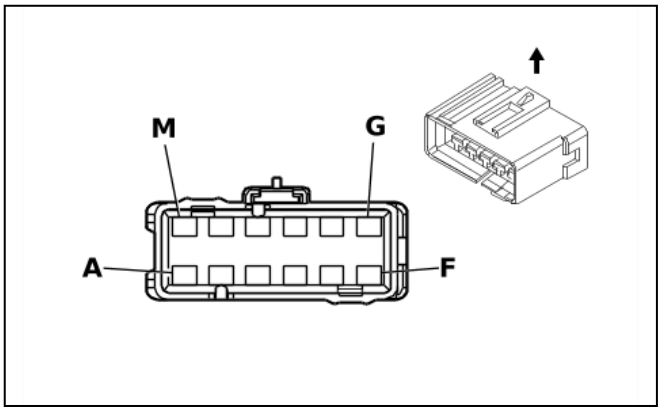

365987

Connector Part Information

- Harness Type: Body Wiring Harness
- OEM Connector: 12191928
- Service Connector: 88986418
- Description: 12-Way F 280 Metri-Pack Series(BK)

Terminal Part Information

Terminal Type ID	Terminated Lead	Diagnostic Test Probe	Terminal Removal Tool
I	13575721	J-35616-4A (PU)	J-38125-553
II	13579958	J-35616-4A (PU)	J-38125-11A
III	19330177	J-35616-4A (PU)	J-38125-11A

JX347 Splice Pack

Pin	Size	Color	Circuit	Function	Terminal Type ID	Option
A	3	BK	450	Ground	III	—
B	—	—	—	Not Occupied	—	—
C	0.35	BK	450	Ground	I	—
D	0.35	BK	450	Ground	I	—
E	5	BK	450	Ground	II	—
F	—	—	—	Not Occupied	—	—
G	5	BK	450	Ground	II	—
H - L	—	—	—	Not Occupied	—	—
M	3	BK	450	Ground	III	—

JX348 Splice Pack

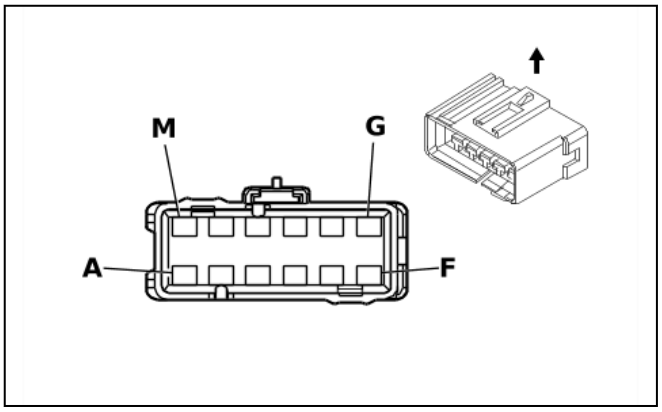

365987

Connector Part Information

- Harness Type: Body Wiring Harness
- OEM Connector: 12191928
- Service Connector: 88986418
- Description: 12-Way F 280 Metri-Pack Series(BK)

Terminal Part Information

Terminal Type ID	Terminated Lead	Diagnostic Test Probe	Terminal Removal Tool
I	13575721	J-35616-4A (PU)	J-38125-553
II	19330177	J-35616-4A (PU)	J-38125-11A

JX348 Splice Pack

Pin	Size	Color	Circuit	Function	Terminal Type ID	Option
A	0.35	BK	1850	Ground	I	—
B	0.75	BK	1850	Ground	I	—
C	3	BK	1850	Ground	II	—
D	0.35	BK	1850	Ground	I	—
E	—	—	—	Not Occupied	—	—
F	0.5	BK	1850	Ground	I	—
G	0.5	BK / WH	2751	Signal Ground	I	—
H	—	—	—	Not Occupied	—	—
J	1	BK	1850	Ground	I	—
K - M	—	—	—	Not Occupied	—	—

X100 Instrument Panel Wiring Harness to Engine Wiring Harness

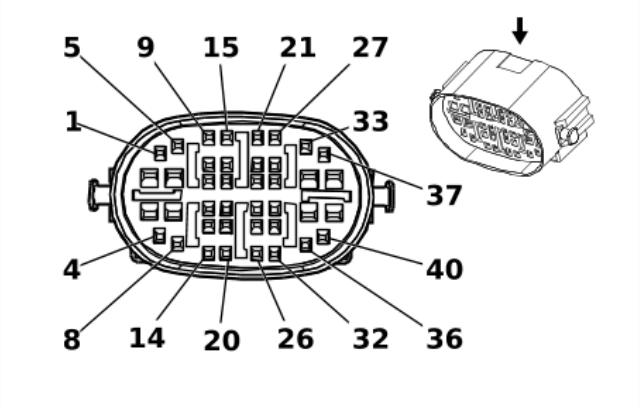

1713502

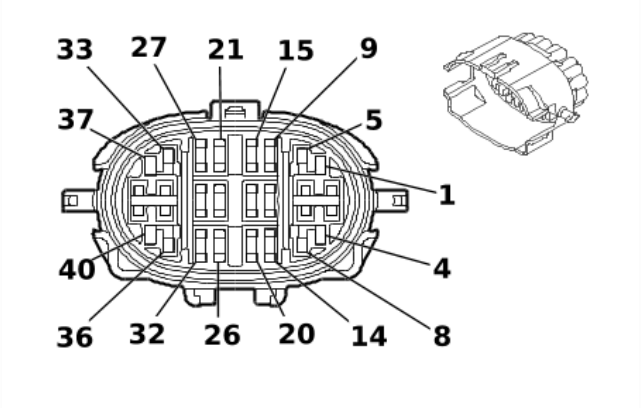

1713503

Connector Part Information
- Harness Type: Instrument Panel Wiring Harness
- OEM Connector: 13601803
- Service Connector: 19166997
- Description: 40-Way F 150, 280 GT Series, Sealed(BK)

Connector Part Information
- Harness Type: Engine Wiring Harness
- OEM Connector: 13605375
- Service Connector: 19166997
- Description: 40-Way M 150, 280 GT Series, Sealed(BK)

Terminal Part Information

Terminal Type ID	Terminated Lead	Diagnostic Test Probe	Terminal Removal Tool
I	13575354	J-35616-2A (GY)	J-38125-215A
II	13575404	J-35616-4A (PU)	J-38125-215A
III	13575412	J-35616-14 (GN)	J-38125-215A
IV	13576407	J-35616-4A (PU)	J-38125-215A
V	13580824	J-35616-4A (PU)	J-38125-553
VI	19300420	J-35616-14 (GN)	J-38125-559
VII	13575353	J-35616-5 (PU)	J-38125-215A
VIII	13575397	J-35616-3 (GY)	J-38125-215A
IX	13575443	J-35616-5 (PU)	J-38125-215A
X	13576364	J-35616-3 (GY)	J-38125-215A
XI	13580826	J-35616-5 (PU)	J-38125-215A
XII	19368625	J-35616-3 (GY)	J-38125-215A

X100 Instrument Panel Wiring Harness to Engine Wiring Harness

Pin	Size	Color	Circuit	Terminal Type ID	Option	Function	Pin	Size	Color	Circuit	Terminal Type ID	Option
(1) 1	(1) 0.35	(1) WH / BU	(1) 6311	(1) I	(1) —	(1) Cruise/ETC/TCC Brake Signal	(1) 1	(1) 0.5	(1) WH / BU	(1) 6311	(1) VIII	(1) —
(2) 2	(2) 0.75	(2) OG	(2) 52	(2) II	(2) —	(2) Blower Motor High Speed Control	(2) 2	(2) 1	(2) WH / BK	(2) 52	(2) XI	(2) —
(3) 3	(3) 0.75	(3) BU	(3) 72	(3) II	(3) —	(3) Blower Motor Medium 2 Control	(3) 3	(3) 2	(3) BU / YE	(3) 72	(3) IX	(3) —
4 - 5	—	—	—	—	—	Not Occupied	4 - 5	—	—	—	—	—

Pin	Size	Color	Circuit	Terminal Type ID	Option	Function	Pin	Size	Color	Circuit	Terminal Type ID	Option
(6) 6	(6) 0.75	(6) TN	(6) 63	(6) II	(6) —	(6) Blower Motor Medium 1 Control	(6) 6	(6) 1	(6) YE / BN	(6) 63	(6) XI	(6) —
(7) 7	(7) 2	(7) BK	(7) 1250	(7) IV	(7) —	(7) Ground	(7) 7	(7) 2	(7) BK	(7) 1250	(7) IX	(7) —
(8) 8	(8) 0.75	(8) YE	(8) 60	(8) II	(8) —	(8) Blower Motor Low Speed Control	(8) 8	(8) 1	(8) YE	(8) 60	(8) X	(8) —
9 - 13	—	—	—	—	—	Not Occupied	9 - 13	—	—	—	—	—
(14) 14	(14) 0.5	(14) GN	(14) 66	(14) I	(14) —	(14) Air Conditioning Request Signal	(14) 14	(14) 0.5	(14) BN	(14) 66	(14) VIII	(14) —
(15) 15	(15) 0.5	(15) WH / BU	(15) 5986	(15) I	(15) —	(15) Serial Data Communication Enable	(15) 15	(15) 0.5	(15) WH / BU	(15) 5986	(15) VIII	(15) —
(16) 16	(16) 0.5	(16) GN	(16) 66	(16) I	(16) —	(16) Air Conditioning Request Signal	(16) 16	(16) 0.5	(16) BN / WH	(16) 66	(16) VIII	(16) —
(17) 17	(17) 0.75	(17) GN / GY	(17) 333	(17) III	(17) —	(17) Brake Fluid Level Signal	(17) 17	(17) 0.75	(17) GN / GY	(17) 333	(17) X	(17) —
(18) 18	(18) 0.5	(18) BN / WH	(18) 419	(18) I	(18) —	(18) Check Engine Indicator Control	(18) 18	(18) 0.5	(18) BN / WH	(18) 419	(18) VIII	(18) —
(19) 19	(19) 0.5	(19) BU	(19) 5985	(19) I	(19) —	(19) Accessory Wake-Up Serial Data	(19) 19	(19) 0.5	(19) VT / YE	(19) 5985	(19) VIII	(19) —
20	—	—	—	—	—	Not Occupied	20	—	—	—	—	—
(21) 21	(21) 0.35	(21) BK / BU	(21) 1271	(21) VI	(21) —	(21) Accelerator Pedal Position Low Reference 1	(21) 21	(21) 0.5	(21) BK / BU	(21) 1271	(21) XII	(21) —
(22) 22	(22) 0.35	(22) WH / RD	(22) 1164	(22) VI	(22) —	(22) Accelerator Pedal Position 5V Reference 1	(22) 22	(22) 0.5	(22) WH / RD	(22) 1164	(22) XII	(22) —
(23) 23	(23) 0.35	(23) BN / RD	(23) 1274	(23) VI	(23) —	(23) Accelerator Pedal Position 5V Reference 2	(23) 23	(23) 0.5	(23) BN / RD	(23) 1274	(23) XII	(23) —
(24) 24	(24) 0.5	(24) BK / WH	(24) 451	(24) I	(24) —	(24) Signal Ground	(24) 24	(24) 0.75	(24) BK / WH	(24) 451	(24) X	(24) —
25 - 26	—	—	—	—	—	Not Occupied	25 - 26	—	—	—	—	—
(27) 27	(27) 0.35	(27) YE / WH	(27) 1161	(27) VI	(27) —	(27) Accelerator Pedal Position Signal 1	(27) 27	(27) 0.5	(27) YE / WH	(27) 1161	(27) XII	(27) —

Pin	Size	Color	Circuit	Terminal Type ID	Option	Function	Pin	Size	Color	Circuit	Terminal Type ID	Option
(28) 28	(28) 0.35	(28) BK / VT	(28) 1272	(28) VI	(28) —	(28) Accelerator Pedal Position Low Reference 2	(28) 28	(28) 0.5	(28) BK / VT	(28) 1272	(28) XII	(28) —
(29) 29	(29) 0.35	(29) GN / WH	(29) 1162	(29) VI	(29) —	(29) Accelerator Pedal Position Signal 2	(29) 29	(29) 0.5	(29) GN / WH	(29) 1162	(29) XII	(29) —
30 - 32	—	—	—	—	—	Not Occupied	30 - 32	—	—	—	—	—
(33) 33	(33) 0.5	(33) BU	(33) 2500	(33) I	(33) —	(33) High Speed GMLAN Serial Data [+] 1	(33) 33	(33) 0.5	(33) BU	(33) 2500	(33) VIII	(33) —
(34) 34	(34) 0.5	(34) BK / GN	(34) 580	(34) V	(34) —	(34) Engine Control Sensors Low Reference 2	(34) 34	(34) 0.5	(34) BK / GN	(34) 580	(34) VII	(34) —
(35) 35	(35) 0.5	(35) BU / GY	(35) 636	(35) V	(35) —	(35) Ambient Air Temperature Sensor Signal	(35) 35	(35) 0.5	(35) BU / GY	(35) 636	(35) VII	(35) —
(36) 36	(36) 0.5	(36) BU	(36) 2500	(36) I	(36) —	(36) High Speed GMLAN Serial Data [+] 1	(36) 36	(36) 0.5	(36) BU	(36) 2500	(36) VIII	(36) —
(37) 37	(37) 0.5	(37) WH	(37) 2501	(37) I	(37) —	(37) High Speed GMLAN Serial Data [-] 1	(37) 37	(37) 0.5	(37) WH	(37) 2501	(37) VIII	(37) —
38 - 39	—	—	—	—	—	Not Occupied	38 - 39	—	—	—	—	—
(40) 40	(40) 0.5	(40) WH	(40) 2501	(40) I	(40) —	(40) High Speed GMLAN Serial Data [-] 1	(40) 40	(40) 0.5	(40) WH	(40) 2501	(40) VIII	(40) —

X101 Engine Wiring Harness to Chassis Wiring Harness

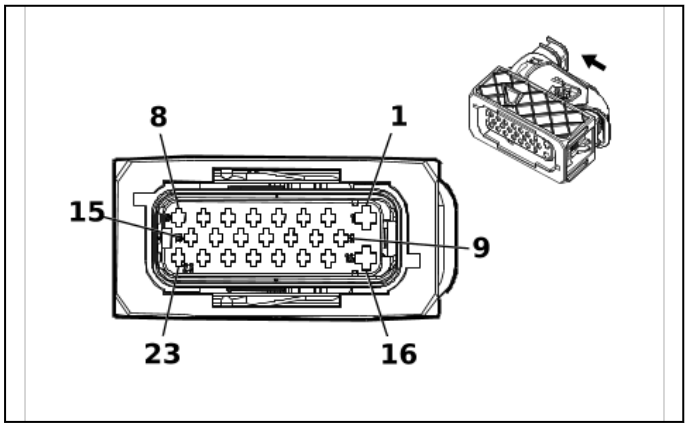

2906942

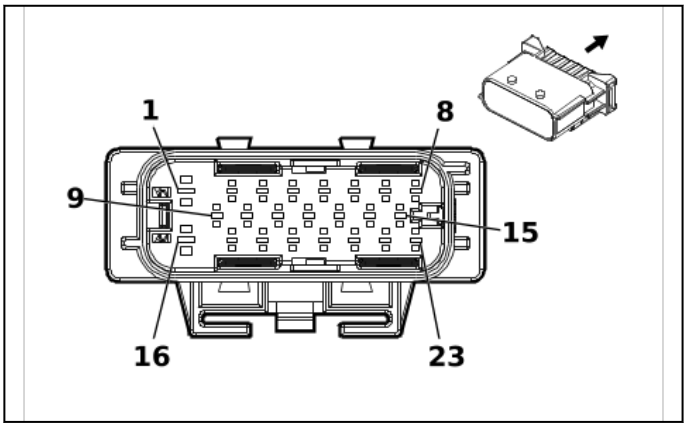

2906943

Connector Part Information

- Harness Type: Engine Wiring Harness
- OEM Connector: 13674800
- Service Connector: 19300480
- Description: 23-Way F 1.5 DSQ, 2.8 ATS Series, Sealed(BK)

Connector Part Information

- Harness Type: Chassis Wiring Harness
- OEM Connector: 13674783
- Service Connector: 19303858
- Description: 23-Way M 1.5 DSQ, 2.8 ATS Series, Sealed(BK)

Terminal Part Information

Terminal Type ID	Terminated Lead	Diagnostic Test Probe	Terminal Removal Tool
I	19368143	J-35616-14 (GN)	J-38125-215A
II	19368136	J-35616-3 (GY)	EL-38125-560A

X101 Engine Wiring Harness to Chassis Wiring Harness

Pin	Size	Color	Circuit	Terminal Type ID	Option	Function	Pin	Size	Color	Circuit	Terminal Type ID	Option
1	—	—	—	—	—	Not Occupied	1	—	—	—	—	—
(2) 2	(2) 0.5	(2) BU	(2) 2500	(2) I	(2) —	(2) High Speed GMLAN Serial Data [+] 1	(2) 2	(2) 0.5	(2) BU	(2) 2500	(2) II	(2) —
(3) 3	(3) 0.5	(3) WH	(3) 2501	(3) I	(3) —	(3) High Speed GMLAN Serial Data [-] 1	(3) 3	(3) 0.5	(3) WH	(3) 2501	(3) II	(3) —
(4) 4	(4) 0.5	(4) YE	(4) 2375	(4) I	(4) —	(4) Left Rear Outer Parking Assist Sensor Signal	(4) 4	(4) 0.5	(4) YE	(4) 2375	(4) II	(4) —
(5) 5	(5) 0.5	(5) YE / BU	(5) 2376	(5) I	(5) —	(5) Left Rear Middle Parking Assist Sensor Signal	(5) 5	(5) 0.5	(5) YE / BU	(5) 2376	(5) II	(5) —
6	—	—	—	—	—	Not Occupied	6	—	—	—	—	—
(7) 7	(7) 0.5	(7) BK / GY	(7) 2379	(7) I	(7) —	(7) Object Sensor Low Reference	(7) 7	(7) 0.5	(7) BK / GY	(7) 2379	(7) II	(7) —

Pin	Size	Color	Circuit	Terminal Type ID	Option	Function	Pin	Size	Color	Circuit	Terminal Type ID	Option
(8) 8	(8) 0.5	(8) GN / GY	(8) 465	(8) I	(8) —	(8) Fuel Pump Primary Relay Control	(8) 8	(8) 0.5	(8) GN / GY	(8) 465	(8) II	(8) —
9	—	—	—	—	—	Not Occupied	9	—	—	—	—	—
(10) 10	(10) 0.5	(10) YE / WH	(10) 2377	(10) I	(10) —	(10) Right Rear Middle Parking Assist Sensor Signal	(10) 10	(10) 0.5	(10) YE / WH	(10) 2377	(10) II	(10) —
11	—	—	—	—	—	Not Occupied	11	—	—	—	—	—
(12) 12	(12) 0.5	(12) VT / GN	(12) 4320	(12) I	(12) —	(12) Powertrain Sensor Bus Enable	(12) 12	(12) 0.5	(12) VT / GN	(12) 4320	(12) II	(12) —
13	—	—	—	—	—	Not Occupied	13	—	—	—	—	—
(14) 14	(14) 0.5	(14) BN / WH	(14) 2374	(14) I	(14) —	(14) Object Sensor Voltage Reference	(14) 14	(14) 0.5	(14) BN / WH	(14) 2374	(14) II	(14) —
(15) 15	(15) 0.5	(15) YE / VT	(15) 2378	(15) I	(15) —	(15) Right Rear Outer Parking Assist Sensor Signal	(15) 15	(15) 0.5	(15) YE / VT	(15) 2378	(15) II	(15) —
16	—	—	—	—	—	Not Occupied	16	—	—	—	—	—
(17) 17	(17) 0.5	(17) BU / BN	(17) 4498	(17) I	(17) —	(17) High Speed GMLAN Serial Data [+] 7	(17) 17	(17) 0.5	(17) BU / BN	(17) 4498	(17) II	(17) —
(18) 18	(18) 0.5	(18) WH	(18) 4499	(18) I	(18) —	(18) High Speed GMLAN Serial Data [-] 7	(18) 18	(18) 0.5	(18) WH	(18) 4499	(18) II	(18) —
19	—	—	—	—	—	Not Occupied	19	—	—	—	—	—
(20) 20	(20) 0.5	(20) WH / BU	(20) 5986	(20) I	(20) —	(20) Serial Data Communication Enable	(20) 20	(20) 0.5	(20) WH / BU	(20) 5986	(20) II	(20) —
21	—	—	—	—	—	Not Occupied	21	—	—	—	—	—
(22) 22	(22) 0.5	(22) BU	(22) 2500	(22) I	(22) —	(22) High Speed GMLAN Serial Data [+] 1	(22) 22	(22) 0.5	(22) BU	(22) 2500	(22) II	(22) —
(23) 23	(23) 0.5	(23) WH	(23) 2501	(23) I	(23) —	(23) High Speed GMLAN Serial Data [-] 1	(23) 23	(23) 0.5	(23) WH	(23) 2501	(23) II	(23) —

X102 Chassis Wiring Harness to Fuel Tank Wiring Harness

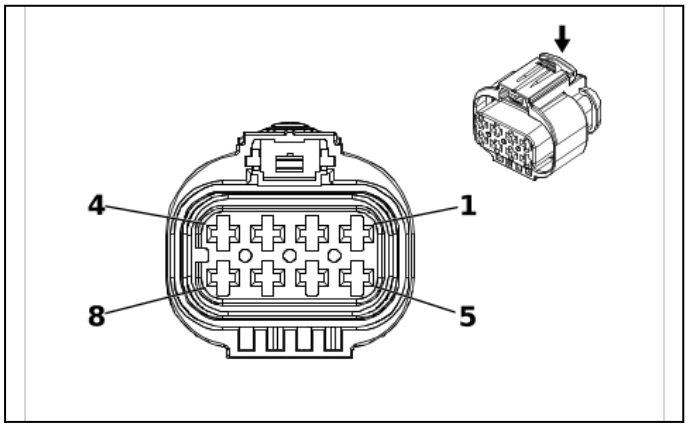

3749582

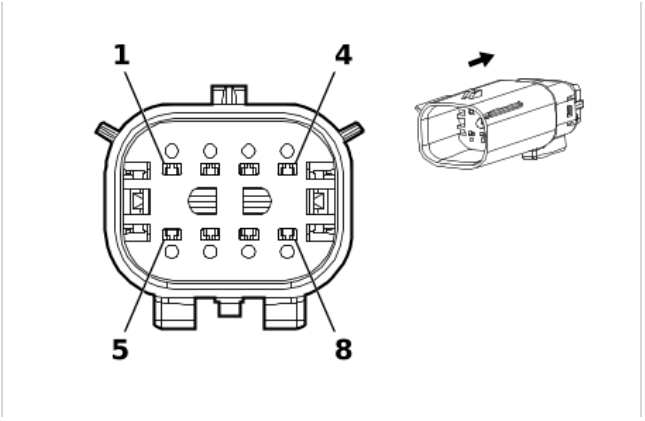

2667653

Connector Part Information
- Harness Type: Chassis Wiring Harness
- OEM Connector: 2-2109441-5
- Service Connector: 19354078
- Description: 8-Way F 2.8 Series, Sealed(L-GY)

Connector Part Information
- Harness Type: Fuel Tank Wiring Harness
- OEM Connector: Not Available
- Service Connector: Service by Harness - See Part Catalog
- Description: 8-Way M (L-GY)

Terminal Part Information

Terminal Type ID	Terminated Lead	Diagnostic Test Probe	Terminal Removal Tool
I	Not required	J-35616-35 (VT)	No Tool Required
II	Not required	J-35616-4A (PU)	No Tool Required
III	Not required	No Tool Required	No Tool Required

X102 Chassis Wiring Harness to Fuel Tank Wiring Harness

Pin	Size	Color	Circuit	Terminal Type ID	Option	Function	Pin	Size	Color	Circuit	Terminal Type ID	Option
(1) 1	(1) 2.5	(1) GY	(1) 120	(1) I	(1) —	(1) Fuel Pump Control	(1) 1	(1) 2.5	(1) GY	(1) 120	(1) III	(1) —
(2) 2	(2) 2.5	(2) YE / GY	(2) 4137	(2) I	(2) —	(2) Fuel Pump Supply Voltage Phase 2	(2) 2	(2) 2.5	(2) YE / GY	(2) 4137	(2) III	(2) —
(3) 3	(3) 2.5	(3) W H / BN	(3) 4138	(3) I	(3) —	(3) Fuel Pump Supply Voltage Phase 3	(3) 3	(3) 2.5	(3) W H / BN	(3) 4138	(3) III	(3) —
(4) 4	(4) 0.5	(4) BK	(4) 7444	(4) II	(4) —	(4) Fuel Pump Assembly Shield Ground	(4) 4	(4) 0.5	(4) BK	(4) 7444	(4) III	(4) —
(5) 5	(5) 0.5	(5) BU / VT	(5) 1589	(5) II	(5) —	(5) Primary Fuel Level Sensor Signal	(5) 5	(5) 0.5	(5) BU / VT	(5) 1589	(5) III	(5) —
(6) 6	(6) 0.5	(6) BK / GN	(6) 6281	(6) II	(6) —	(6) Fuel Level Sensor Low Reference	(6) 6	(6) 0.5	(6) BK / GN	(6) 6281	(6) III	(6) —
7 - 8	—	—	—	—	—	Not Occupied	7 - 8	—	—	—	—	—

X103 Engine Wiring Harness to Starter Motor Jumper Wiring Harness

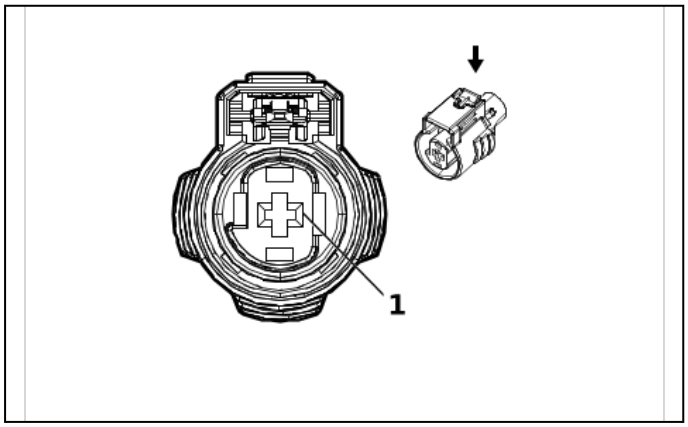

2717134

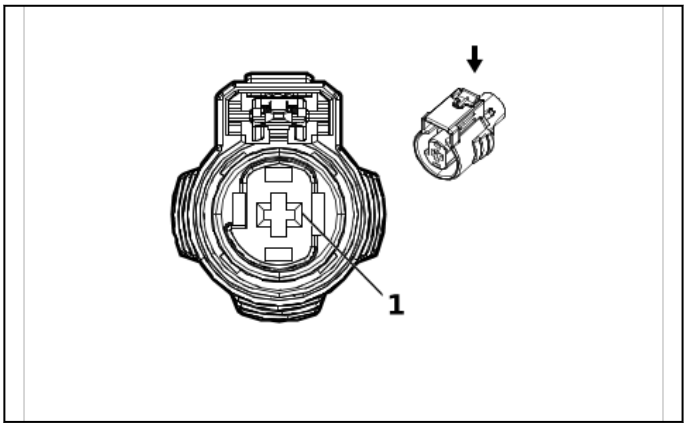

2717134

Connector Part Information
- Harness Type: Engine Wiring Harness
- OEM Connector: 2098198-5
- Service Connector: 19300471
- Description: 1-Way F 2.8 MCP Series, Sealed(BK)

Connector Part Information
- Harness Type: Starter Motor Jumper Wiring Harness
- OEM Connector: Not Available
- Service Connector: Service by Harness - See Part Catalog
- Description: 1-Way M (BK)

Terminal Part Information

Terminal Type ID	Terminated Lead	Diagnostic Test Probe	Terminal Removal Tool
I	Not required	J-35616-35 (VT)	No Tool Required
II	Not required	No Tool Required	No Tool Required

X103 Engine Wiring Harness to Starter Motor Jumper Wiring Harness

Pin	Size	Color	Circuit	Terminal Type ID	Option	Function	Pin	Size	Color	Circuit	Terminal Type ID	Option
(1) 1	(1) 4	(1) YE	(1) 6	(1) I	(1) —	(1) Starter Solenoid Crank Igni-tion Voltage	(1) 1	(1) 4	(1) YE	(1) 6	(1) II	(1) —

X104 Instrument Panel Wiring Harness to Front Seat Wiring Harness

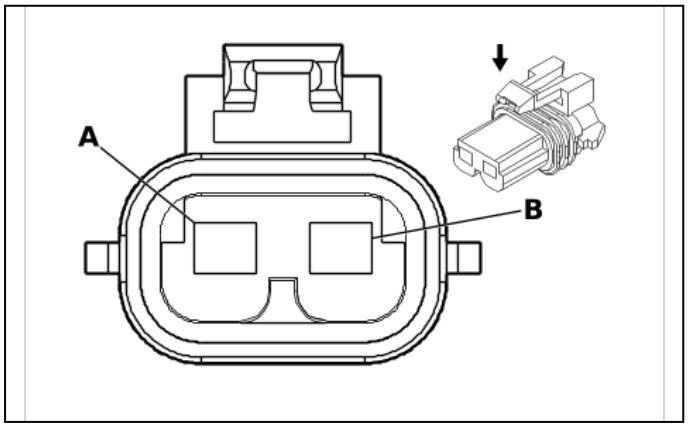

684799

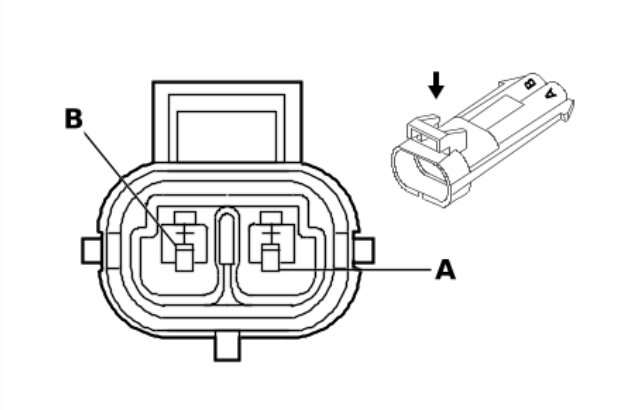

879383

Connector Part Information
- Harness Type: Instrument Panel Wiring Harness
- OEM Connector: 12077900
- Service Connector: 12116247
- Description: 2-Way F 280 Metri-Pack Series, Sealed(BK)

Connector Part Information
- Harness Type: Front Seat Wiring Harness
- OEM Connector: 15317807
- Service Connector: Service by Harness - See Part Catalog
- Description: 2-Way M 280 Metri-Pack Series(BK)

Terminal Part Information

Terminal Type ID	Terminated Lead	Diagnostic Test Probe	Terminal Removal Tool
I	Not required	J-35616-4A (PU)	No Tool Required
II	Not required	J-35616-5 (PU)	No Tool Required

X104 Instrument Panel Wiring Harness to Front Seat Wiring Harness

Pin	Size	Color	Circuit	Terminal Type ID	Option	Function	Pin	Size	Color	Circuit	Terminal Type ID	Option
A	0.5	BU / WH	6619	I	—	Front Middle Impact Dis-criminating Sensor Low Reference	A	0.5	BU / WH	6619	II	—
B	0.5	BN / WH	6618	I	—	Front Middle Impact Dis-criminating Sensor Signal	B	0.5	BN / WH	6618	II	—

X130 Engine Wiring Harness to Camshaft Position Sensor Wire

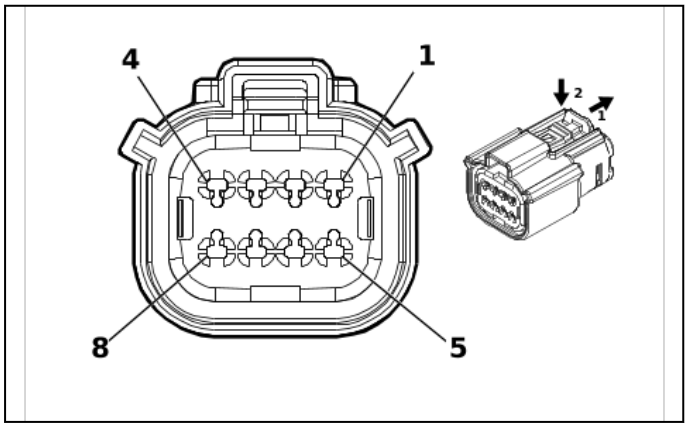

4846407

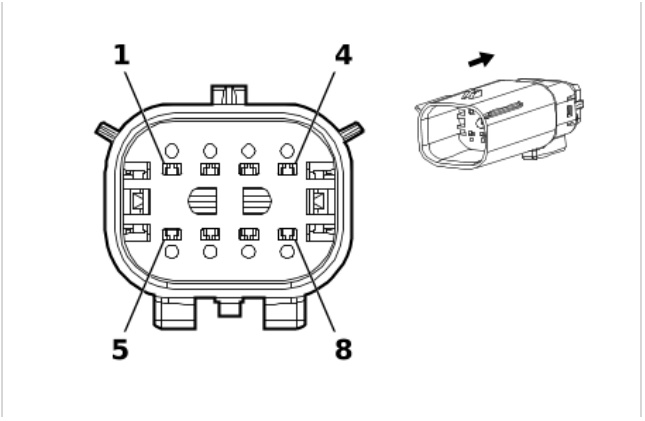

2667653

Connector Part Information
- Harness Type: Engine Wiring Harness
- OEM Connector: 33472-4877
- Service Connector: 84928314
- Description: 8-Way F 1.5 MX Series, Sealed(BK)

Connector Part Information
- Harness Type: Camshaft Position Sensor Wire
- OEM Connector: Not Available
- Service Connector: Service by Harness - See Part Catalog
- Description: 8-Way M (BK)

Terminal Part Information

Terminal Type ID	Terminated Lead	Diagnostic Test Probe	Terminal Removal Tool
I	Not required	J-35616-14 (GN)	No Tool Required
II	Not required	No Tool Required	No Tool Required

X130 Engine Wiring Harness to Camshaft Position Sensor Wire

Pin	Size	Color	Circuit	Terminal Type ID	Option	Function	Pin	Size	Color	Circuit	Terminal Type ID	Option
(1) 1	(1) 0.5	(1) GY / BU	(1) 5300	(1) I	(1) —	(1) Intake Camshaft Position Sensor 1 Voltage Reference	(1) 1	(1) 0.5	(1) GY / BU	(1) 5300	(1) II	(1) —
(2) 2	(2) 0.5	(2) BK / GN	(2) 5301	(2) I	(2) —	(2) Intake Camshaft Position Sensor Low Reference 1	(2) 2	(2) 0.5	(2) BK / GN	(2) 5301	(2) II	(2) —
(3) 3	(3) 0.5	(3) YE / VT	(3) 5275	(3) I	(3) —	(3) Intake Camshaft Position Sensor 1	(3) 3	(3) 0.5	(3) YE / VT	(3) 5275	(3) II	(3) —
(4) 4	(4) 0.5	(4) BU	(4) 179	(4) I	(4) —	(4) Engine Oil Pump Control	(4) 4	(4) 0.5	(4) BU	(4) 179	(4) II	(4) —
(5) 5	(5) 0.5	(5) VT / BN	(5) 5284	(5) I	(5) —	(5) Intake Camshaft Position Actuator Solenoid Valve 1	(5) 5	(5) 0.5	(5) VT / BN	(5) 5284	(5) II	(5) —

Pin	Size	Color	Circuit	Terminal Type ID	Option	Function	Pin	Size	Color	Circuit	Terminal Type ID	Option
(6) 6	(6) 0.5	(6) BK / BN	(6) 6753	(6) I	(6) —	(6) Camshaft Position Actuator Solenoid Valve 1 Low Reference	(6) 6	(6) 0.5	(6) BK / BN	(6) 6753	(6) II	(6) —
(7) 7	(7) 0.5	(7) VT / BU	(7) 5293	(7) I	(7) —	(7) Powertrain Main Relay Fused Supply Voltage 4	(7) 7	(7) 0.5	(7) VT / BU	(7) 5293	(7) II	(7) —
8	—	—	—	—	—	Not Occupied	8	—	—	—	—	—

X135 Camshaft Position Sensor Wire to Oil Pump Flow Control Solenoid Valve Wire (L8T)

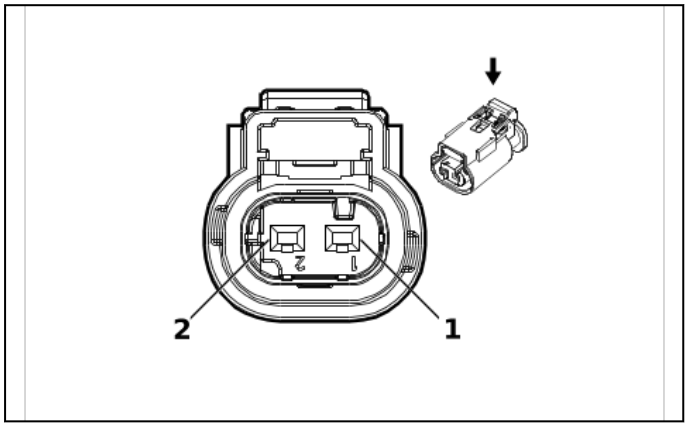

2717066

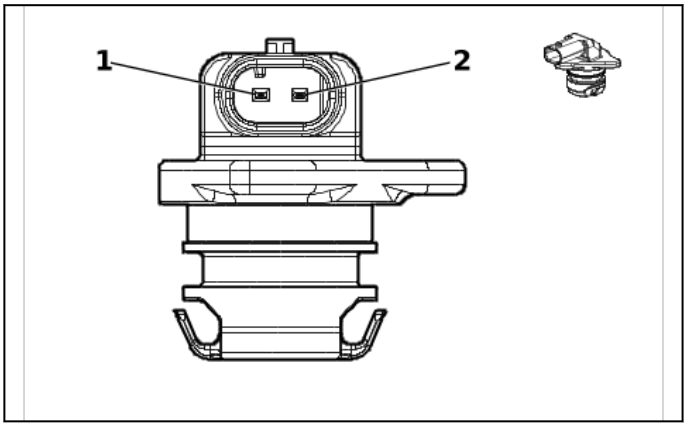

5869753

Connector Part Information
- Harness Type: Camshaft Position Sensor Wire
- OEM Connector: 10010337
- Service Connector: Service by Harness - See Part Catalog
- Description: 2-Way F 1.2 Multilock Series, Sealed(BK)

Connector Part Information
- Harness Type: Oil Pump Flow Control Solenoid Valve Wire
- OEM Connector: 310832B
- Service Connector: Service by Harness - See Part Catalog
- Description: 2-Way M 1.2 Series, Sealed(BK)

Terminal Part Information

Terminal Type ID	Terminated Lead	Diagnostic Test Probe	Terminal Removal Tool
I	Not required	J-35616-12 (BU)	No Tool Required
II	Not required	J-35616-13 (BU)	No Tool Required

X135 Camshaft Position Sensor Wire to Oil Pump Flow Control Solenoid Valve Wire (L8T)

Pin	Size	Color	Circuit	Terminal Type ID	Option	Function	Pin	Size	Color	Circuit	Terminal Type ID	Option
(1) 1	(1) 0.5	(1) VT / BU	(1) 5293	(1) I	(1) —	(1) Powertrain Main Relay Fused Supply Voltage 4	(1) 1	(1) 0.5	(1) VT / BU	(1) 5293	(1) II	(1) —
(2) 2	(2) 0.5	(2) BU	(2) 179	(2) I	(2) —	(2) Engine Oil Pump Control	(2) 2	(2) 0.5	(2) BU	(2) 179	(2) II	(2) —

X141 Instrument Panel Wiring Harness to Brake Fluid Level Indicator Wiring Harness

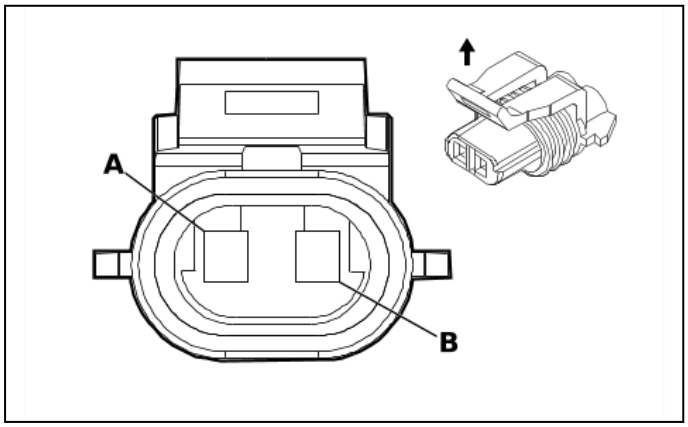

537107

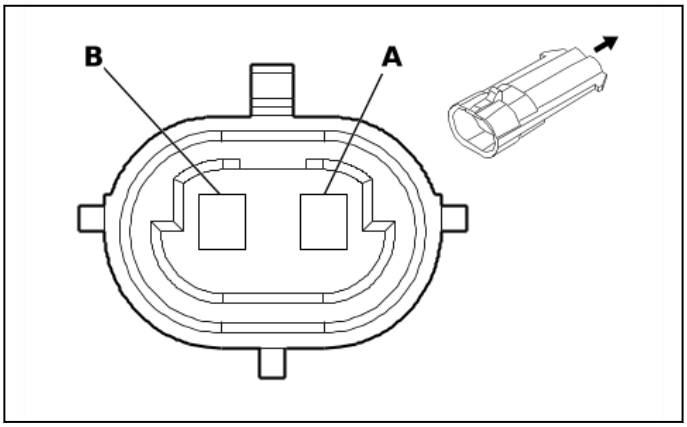

605500

Connector Part Information
- Harness Type: Instrument Panel Wiring Harness
- OEM Connector: 12052644
- Service Connector: 19368034
- Description: 2-Way F 150 Metri-Pack Series, Sealed(GY)

Connector Part Information
- Harness Type: Brake Fluid Level Indicator Wiring Harness
- OEM Connector: 12162343
- Service Connector: Service by Harness - See Part Catalog
- Description: 2-Way M 150 Metri-Pack Series, Sealed(GY)

Terminal Part Information

Terminal Type ID	Terminated Lead	Diagnostic Test Probe	Terminal Removal Tool
I	Not required	J-35616-14 (GN)	No Tool Required
II	Not required	J-35616-3 (GY)	No Tool Required

X141 Instrument Panel Wiring Harness to Brake Fluid Level Indicator Wiring Harness

Pin	Size	Color	Circuit	Terminal Type ID	Option	Function	Pin	Size	Color	Circuit	Terminal Type ID	Option
A	0.5	TN / WH	33	I	—	Brake Warning Indicator Control	A	0.5	TN / WH	33	II	—
B	0.5	BK / WH	351	I	—	Signal Ground	B	0.5	BK	350	II	—

X150 Instrument Panel Wiring Harness to Forward Lamp Wiring Harness

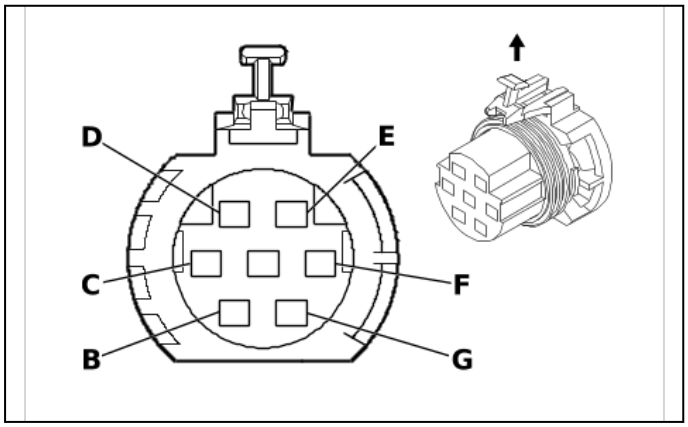

655687

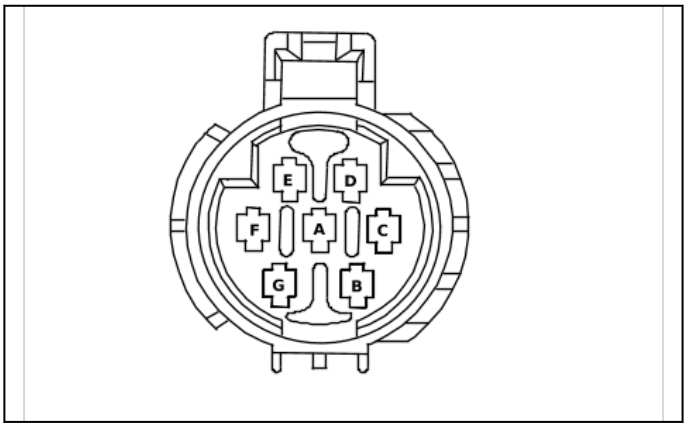

258231

Connector Part Information
- Harness Type: Instrument Panel Wiring Harness
- OEM Connector: 12110751
- Service Connector: 12110751
- Description: 7-Way F 280 Metri-Pack Flexlock Series, Sealed(BK)

Connector Part Information
- Harness Type: Forward Lamp Wiring Harness
- OEM Connector: 12110753
- Service Connector: Service by Harness - See Part Catalog
- Description: 7-Way M 280 Metri-Pack Series, Sealed(BK)

Terminal Part Information

Terminal Type ID	Terminated Lead	Diagnostic Test Probe	Terminal Removal Tool
I	Not required	J-35616-4A (PU)	No Tool Required
II	Not required	J-35616-5 (PU)	No Tool Required

X150 Instrument Panel Wiring Harness to Forward Lamp Wiring Harness

Pin	Size	Color	Circuit	Terminal Type ID	Option	Function	Pin	Size	Color	Circuit	Terminal Type ID	Option
A	0.5	BN / GN	109	I	—	Hood Ajar Switch Signal	A	0.5	BN / GN	109	II	—
B	0.5	PU	5531	I	—	Hood Closed Switch Signal	B	0.5	BK / BN	5531	II	—
C	0.5	BU / GY	636	I	—	Ambient Air Temperature Sensor Signal	C	0.5	BU / GY	636	II	—
D	0.5	BK / BU	61	I	—	Ambient Air Temperature Sensor Low Reference	D	0.5	BK / BU	61	II	—
E	0.5	BK / GN	580	I	—	Engine Control Sensors Low Reference 2	E	0.5	BK / GN	580	II	—
F	0.5	BU / GY	636	I	—	Ambient Air Temperature Sensor Signal	F	0.5	BU / GY	636	II	—
G	—	—	—	—	—	Not Occupied	G	—	—	—	—	—

X155 Engine Wiring Harness to Engine Coolant Temperature Sensor Harness

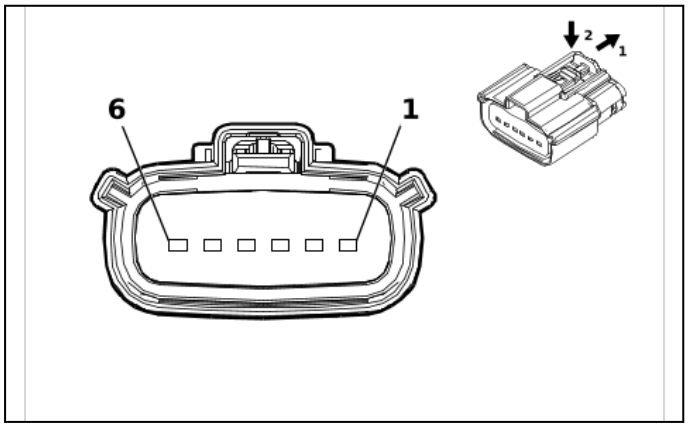

5126816

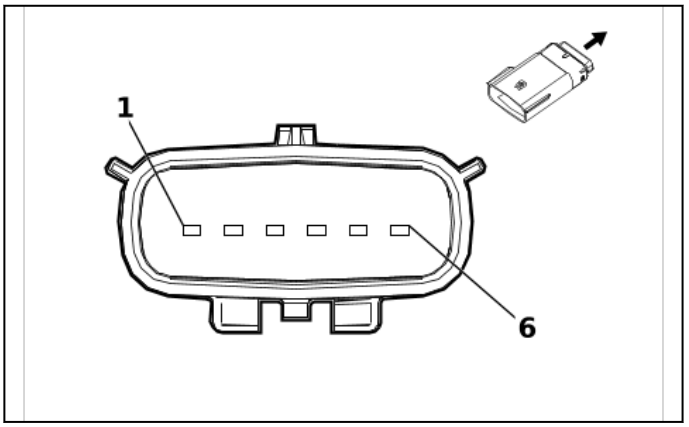

3277908

Connector Part Information
- Harness Type: Engine Wiring Harness
- OEM Connector: 33471-6006
- Service Connector: 86801953
- Description: 6-Way F 1.5 Series, Sealed(BK)

Connector Part Information
- Harness Type: Engine Coolant Temperature Sensor Harness
- OEM Connector: 33481-6606
- Service Connector: Service by Harness - See Part Catalog
- Description: 6-Way M 1.5 MX Series, Sealed(BK)

Terminal Part Information

Terminal Type ID	Terminated Lead	Diagnostic Test Probe	Terminal Removal Tool
I	Not required	J-35616-14 (GN)	No Tool Required
II	Not required	J-35616-3 (GY)	No Tool Required

X155 Engine Wiring Harness to Engine Coolant Temperature Sensor Harness

Pin	Size	Color	Circuit	Terminal Type ID	Option	Function	Pin	Size	Color	Circuit	Terminal Type ID	Option
(1) 1	(1) 0.5	(1) BU	(1) 410	(1) I	(1) —	(1) Engine Coolant Temperature Sensor Signal	(1) 1	(1) 0.5	(1) BU	(1) 410	(1) II	(1) —
(2) 2	(2) 0.5	(2) BK / YE	(2) 548	(2) I	(2) —	(2) Engine Control Sensors Low Reference 1	(2) 2	(2) 0.5	(2) BK / YE	(2) 548	(2) II	(2) —
(3) 3	(3) 0.5	(3) YE / BN	(3) 331	(3) I	(3) —	(3) Oil Pressure Sensor Signal	(3) 3	(3) 0.5	(3) YE / BN	(3) 331	(3) II	(3) —
(4) 4	(4) 0.5	(4) BK / YE	(4) 548	(4) I	(4) —	(4) Engine Control Sensors Low Reference 1	(4) 4	(4) 0.5	(4) BK / YE	(4) 548	(4) II	(4) —
(5) 5	(5) 0.5	(5) W H / RD	(5) 480	(5) I	(5) —	(5) Engine Control Vehicle Sensors 5 Volt Reference 1	(5) 5	(5) 0.5	(5) W H / RD	(5) 480	(5) II	(5) —
6	—	—	—	—	—	Not Occupied	6	—	—	—	—	—

X160 Engine Wiring Harness to Fuel Injector Wiring Harness - Left (L8T)

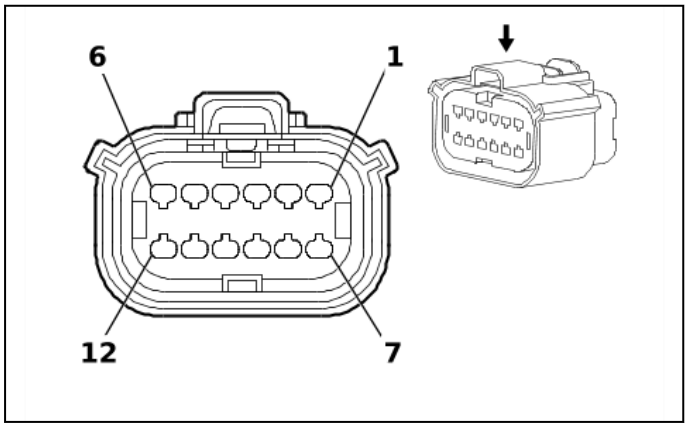

1825165

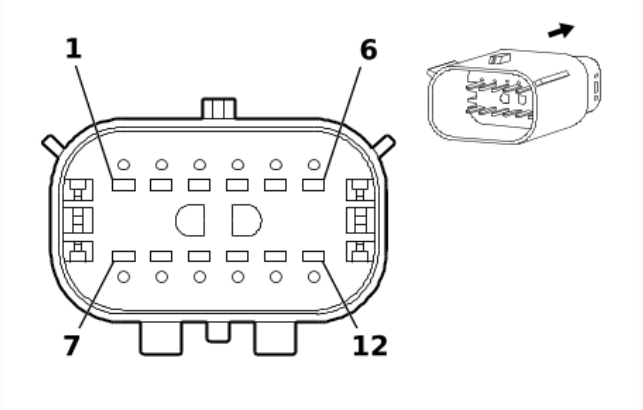

1825167

Connector Part Information
- Harness Type: Engine Wiring Harness
- OEM Connector: 33472-1216
- Service Connector: 19352907
- Description: 12-Way F 1.5 MX Series, Sealed(BK)

Connector Part Information
- Harness Type: Fuel Injector Wiring Harness - Left
- OEM Connector: 334826206
- Service Connector: Service by Harness - See Part Catalog
- Description: 12-Way M 1.5 MX Series, Sealed(BK)

Terminal Part Information

Terminal Type ID	Terminated Lead	Diagnostic Test Probe	Terminal Removal Tool
I	85528055	J-35616-2A (GY)	J-38125-217
II	Not required	J-35616-3 (GY)	No Tool Required

X160 Engine Wiring Harness to Fuel Injector Wiring Harness - Left (L8T)

Pin	Size	Color	Circuit	Terminal Type ID	Option	Function	Pin	Size	Color	Circuit	Terminal Type ID	Option
(1) 1	(1) 0.75	(1) BN / WH	(1) 4901	(1) I	(1) —	(1) Direct Fuel Injector High Voltage Supply Cylinder 1	(1) 1	(1) 0.75	(1) BN / WH	(1) 4901	(1) II	(1) —
(2) 2	(2) 0.75	(2) GN / GY	(2) 4903	(2) I	(2) —	(2) Direct Fuel Injector High Voltage Supply Cylinder 3	(2) 2	(2) 0.75	(2) GN / GY	(2) 4903	(2) II	(2) —
(3) 3	(3) 0.75	(3) GN / WH	(3) 4905	(3) I	(3) —	(3) Direct Fuel Injector High Voltage Supply Cylinder 5	(3) 3	(3) 0.75	(3) GN / WH	(3) 4905	(3) II	(3) —
(4) 4	(4) 0.75	(4) WH / YE	(4) 4907	(4) I	(4) —	(4) Direct Fuel Injector High Voltage Supply Cylinder 7	(4) 4	(4) 0.75	(4) WH / YE	(4) 4907	(4) II	(4) —
(5) 5	(5) 0.75	(5) BN	(5) 4801	(5) I	(5) —	(5) Direct Fuel Injector High Voltage Control Cylinder 1	(5) 5	(5) 0.75	(5) BN	(5) 4801	(5) II	(5) —
6	—	—	—	—	—	Not Occupied	6	—	—	—	—	—

Pin	Size	Color	Circuit	Terminal Type ID	Option	Function	Pin	Size	Color	Circuit	Terminal Type ID	Option
(7) 7	(7) 0.75	(7) GN	(7) 4803	(7) I	(7) —	(7) Direct Fuel Injector High Voltage Control Cylinder 3	(7) 7	(7) 0.75	(7) GN	(7) 4803	(7) II	(7) —
(8) 8	(8) 0.75	(8) WH / GN	(8) 4805	(8) I	(8) —	(8) Direct Fuel Injector High Voltage Control Cylinder 5	(8) 8	(8) 0.75	(8) WH / GN	(8) 4805	(8) II	(8) —
(9) 9	(9) 0.75	(9) YE / GY	(9) 4807	(9) I	(9) —	(9) Direct Fuel Injector High Voltage Control Cylinder 7	(9) 9	(9) 0.75	(9) YE / GY	(9) 4807	(9) II	(9) —
(10) 10	(10) 0.5	(10) WH / RD	(10) 480	(10) I	(10) —	(10) Engine Control Vehicle Sensors 5 Volt Reference 1	(10) 10	(10) 0.5	(10) WH / RD	(10) 480	(10) II	(10) —
(11) 11	(11) 0.5	(11) BU / WH	(11) 2918	(11) I	(11) —	(11) Fuel Rail Pressure Sensor Signal	(11) 11	(11) 0.5	(11) BU / WH	(11) 2918	(11) II	(11) —
(12) 12	(12) 0.5	(12) BK / YE	(12) 548	(12) I	(12) —	(12) Engine Control Sensors Low Reference 1	(12) 12	(12) 0.5	(12) BK / YE	(12) 548	(12) II	(12) —

X160 Engine Wiring Harness to Fuel Injector Wiring Harness - Left (LV1)

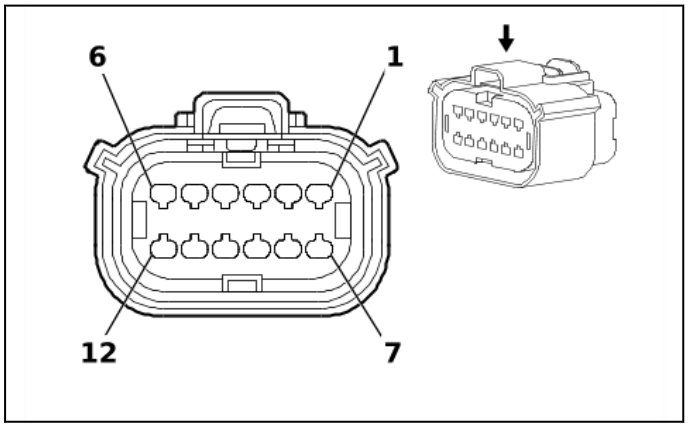

1825165

Connector Part Information
- Harness Type: Engine Wiring Harness
- OEM Connector: 33472-1236
- Service Connector: 19352907
- Description: 12-Way F 1.5 MX Series, Sealed(BK)

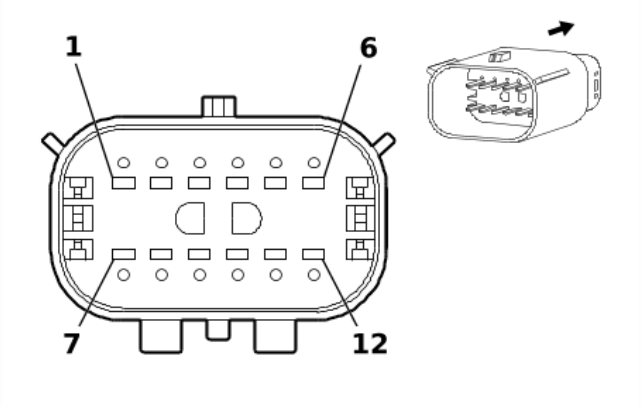

1825167

Connector Part Information
- Harness Type: Fuel Injector Wiring Harness - Left
- OEM Connector: 33482-6216
- Service Connector: Service by Harness - See Part Catalog
- Description: 12-Way M 1.5 MX Series, Sealed(BK)

Terminal Part Information

Terminal Type ID	Terminated Lead	Diagnostic Test Probe	Terminal Removal Tool
I	85528055	J-35616-2A (GY)	J-38125-217
II	Not required	J-35616-3 (GY)	No Tool Required
II	Not required	J-35616-3 (GY)	No Tool Required

X160 Engine Wiring Harness to Fuel Injector Wiring Harness - Left (LV1)

Pin	Size	Color	Circuit	Terminal Type ID	Option	Function	Pin	Size	Color	Circuit	Terminal Type ID	Option
1	—	—	—	—	—	Not Occupied	1	—	—	—	—	—
(2) 2	(2) 0.75	(2) BN / WH	(2) 4901	(2) I	(2) —	(2) Direct Fuel Injector High Voltage Supply Cylinder 1	(2) 2	(2) 0.75	(2) BN / WH	(2) 4901	(2) II	(2) —
(3) 3	(3) 0.75	(3) GN / GY	(3) 4903	(3) I	(3) —	(3) Direct Fuel Injector High Voltage Supply Cylinder 3	(3) 3	(3) 0.75	(3) GN / GY	(3) 4903	(3) II	(3) —
(4) 4	(4) 0.75	(4) GN / WH	(4) 4905	(4) I	(4) —	(4) Direct Fuel Injector High Voltage Supply Cylinder 5	(4) 4	(4) 0.75	(4) GN / WH	(4) 4905	(4) II	(4) —
(5) 5	(5) 0.75	(5) BN	(5) 4801	(5) I	(5) —	(5) Direct Fuel Injector High Voltage Control Cylinder 1	(5) 5	(5) 0.75	(5) BN	(5) 4801	(5) II	(5) —
6 - 7	—	—	—	—	—	Not Occupied	6 - 7	—	—	—	—	—
(8) 8	(8) 0.75	(8) GN	(8) 4803	(8) I	(8) —	(8) Direct Fuel Injector High Voltage Control Cylinder 3	(8) 8	(8) 0.75	(8) GN	(8) 4803	(8) II	(8) —
(9) 9	(9) 0.75	(9) WH / GN	(9) 4805	(9) I	(9) —	(9) Direct Fuel Injector High Voltage Control Cylinder 5	(9) 9	(9) 0.75	(9) WH / GN	(9) 4805	(9) II	(9) —
(10) 10	(10) 0.5	(10) WH / RD	(10) 480	(10) I	(10) —	(10) Engine Control Vehicle Sensors 5 Volt Reference 1	(10) 10	(10) 0.5	(10) WH / RD	(10) 480	(10) II	(10) —
(11) 11	(11) 0.5	(11) BU / WH	(11) 10786	(11) I	(11) —	(11) Fuel Rail Pressure Sensor SENT 1 Signal	(11) 11	(11) 0.5	(11) BU / WH	(11) 10786	(11) II	(11) —
(12) 12	(12) 0.5	(12) BK / YE	(12) 548	(12) I	(12) —	(12) Engine Control Sensors Low Reference 1	(12) 12	(12) 0.5	(12) BK / YE	(12) 548	(12) II	(12) —

X161 Engine Wiring Harness to Fuel Injector Wiring Harness - Right (L8T)

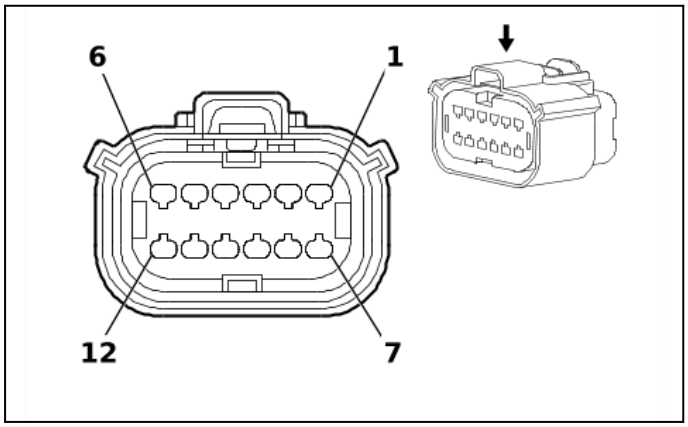

1825165

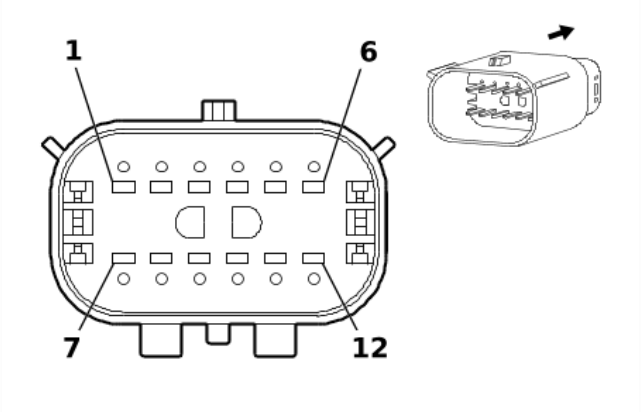

1825167

Connector Part Information
- Harness Type: Engine Wiring Harness
- OEM Connector: 33472-1226
- Service Connector: 19352907
- Description: 12-Way F 1.5 MX Series, Sealed(BK)

Connector Part Information
- Harness Type: Fuel Injector Wiring Harness - Right
- OEM Connector: 334826211
- Service Connector: Service by Harness - See Part Catalog
- Description: 12-Way M 1.5 MX Series, Sealed(BK)

Terminal Part Information

Terminal Type ID	Terminated Lead	Diagnostic Test Probe	Terminal Removal Tool
I	85528055	J-35616-2A (GY)	J-38125-217
II	Not required	J-35616-3 (GY)	No Tool Required

X161 Engine Wiring Harness to Fuel Injector Wiring Harness - Right (L8T)

Pin	Size	Color	Circuit	Terminal Type ID	Option	Function	Pin	Size	Color	Circuit	Terminal Type ID	Option
(1) 1	(1) 0.75	(1) BU / GY	(1) 4902	(1) I	(1) —	(1) Direct Fuel Injector High Voltage Supply Cylinder 2	(1) 1	(1) 0.75	(1) BU / GY	(1) 4902	(1) II	(1) —
(2) 2	(2) 0.75	(2) BU / WH	(2) 4904	(2) I	(2) —	(2) Direct Fuel Injector High Voltage Supply Cylinder 4	(2) 2	(2) 0.75	(2) BU / WH	(2) 4904	(2) II	(2) —
(3) 3	(3) 0.75	(3) VT / GY	(3) 4906	(3) I	(3) —	(3) Direct Fuel Injector High Voltage Supply Cylinder 6	(3) 3	(3) 0.75	(3) VT / GY	(3) 4906	(3) II	(3) —
(4) 4	(4) 0.75	(4) GY / WH	(4) 4908	(4) I	(4) —	(4) Direct Fuel Injector High Voltage Supply Cylinder 8	(4) 4	(4) 0.75	(4) GY / WH	(4) 4908	(4) II	(4) —
(5) 5	(5) 0.75	(5) BU	(5) 4802	(5) I	(5) —	(5) Direct Fuel Injector High Voltage Control Cylinder 2	(5) 5	(5) 0.75	(5) BU	(5) 4802	(5) II	(5) —
6 - 7	—	—	—	—	—	Not Occupied	6 - 7	—	—	—	—	—

Pin	Size	Color	Circuit	Terminal Type ID	Option	Function	Pin	Size	Color	Circuit	Terminal Type ID	Option
(8) 8	(8) 0.75	(8) GY / BU	(8) 4804	(8) I	(8) —	(8) Direct Fuel Injector High Voltage Control Cylinder 4	(8) 8	(8) 0.75	(8) GY / BU	(8) 4804	(8) II	(8) —
(9) 9	(9) 0.75	(9) VT / GN	(9) 4806	(9) I	(9) —	(9) Direct Fuel Injector High Voltage Control Cylinder 6	(9) 9	(9) 0.75	(9) VT / GN	(9) 4806	(9) II	(9) —
(10) 10	(10) 0.75	(10) GY	(10) 4808	(10) I	(10) —	(10) Direct Fuel Injector High Voltage Control Cylinder 8	(10) 10	(10) 0.75	(10) GY	(10) 4808	(10) II	(10) —
(11) 11	(11) 0.75	(11) VT / BK	(11) 7300	(11) I	(11) —	(11) High Pressure Fuel Pump Low Control	(11) 11	(11) 0.75	(11) VT / BK	(11) 7300	(11) II	(11) —
(12) 12	(12) 0.75	(12) YE	(12) 7301	(12) I	(12) —	(12) High Pressure Fuel Pump High Control	(12) 12	(12) 0.75	(12) YE	(12) 7301	(12) II	(12) —

X161 Engine Wiring Harness to Fuel Injector Wiring Harness - Right (LV1)

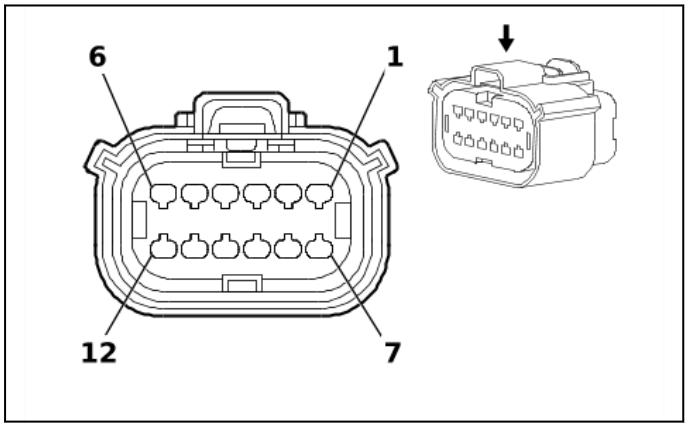

1825165

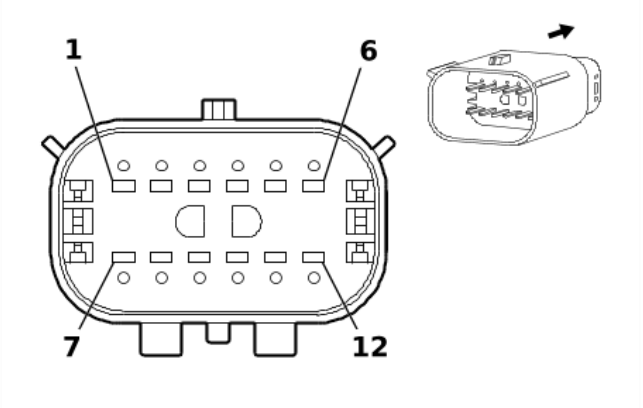

1825167

Connector Part Information
- Harness Type: Engine Wiring Harness
- OEM Connector: 33472-1246
- Service Connector: 19352907
- Description: 12-Way F 1.5 MX Series, Sealed(BK)

Connector Part Information
- Harness Type: Fuel Injector Wiring Harness - Right
- OEM Connector: 33482-6221
- Service Connector: Service by Harness - See Part Catalog
- Description: 12-Way M 1.5 MX Series, Sealed(BK)

Terminal Part Information

Terminal Type ID	Terminated Lead	Diagnostic Test Probe	Terminal Removal Tool
I	85528055	J-35616-2A (GY)	J-38125-217
II	Not required	J-35616-3 (GY)	No Tool Required

X161 Engine Wiring Harness to Fuel Injector Wiring Harness - Right (LV1)

Pin	Size	Color	Circuit	Terminal Type ID	Option	Function	Pin	Size	Color	Circuit	Terminal Type ID	Option
1	—	—	—	—	—	Not Occupied	1	—	—	—	—	—
(2) 2	(2) 0.75	(2) BU / GY	(2) 4902	(2) I	(2) —	(2) Direct Fuel Injector High Voltage Supply Cylinder 2	(2) 2	(2) 0.75	(2) BU / GY	(2) 4902	(2) II	(2) —
(3) 3	(3) 0.75	(3) BU / WH	(3) 4904	(3) I	(3) —	(3) Direct Fuel Injector High Voltage Supply Cylinder 4	(3) 3	(3) 0.75	(3) BU / WH	(3) 4904	(3) II	(3) —
(4) 4	(4) 0.75	(4) VT / GY	(4) 4906	(4) I	(4) —	(4) Direct Fuel Injector High Voltage Supply Cylinder 6	(4) 4	(4) 0.75	(4) VT / GY	(4) 4906	(4) II	(4) —
(5) 5	(5) 0.75	(5) BU	(5) 4802	(5) I	(5) —	(5) Direct Fuel Injector High Voltage Control Cylinder 2	(5) 5	(5) 0.75	(5) BU	(5) 4802	(5) II	(5) —
6 - 7	—	—	—	—	—	Not Occupied	6 - 7	—	—	—	—	—
(8) 8	(8) 0.75	(8) GY / BU	(8) 4804	(8) I	(8) —	(8) Direct Fuel Injector High Voltage Control Cylinder 4	(8) 8	(8) 0.75	(8) GY / BU	(8) 4804	(8) II	(8) —
(9) 9	(9) 0.75	(9) VT / GN	(9) 4806	(9) I	(9) —	(9) Direct Fuel Injector High Voltage Control Cylinder 6	(9) 9	(9) 0.75	(9) VT / GN	(9) 4806	(9) II	(9) —
(10) 10	(10) 0.75	(10) VT / BK	(10) 7300	(10) I	(10) —	(10) High Pressure Fuel Pump Low Control	(10) 10	(10) 0.75	(10) VT / BK	(10) 7300	(10) II	(10) —
(11) 11	(11) 0.75	(11) YE	(11) 7301	(11) I	(11) —	(11) High Pressure Fuel Pump High Control	(11) 11	(11) 0.75	(11) YE	(11) 7301	(11) II	(11) —
12	—	—	—	—	—	Not Occupied	12	—	—	—	—	—

X175 Engine Wiring Harness to Automatic Transmission Wiring Harness

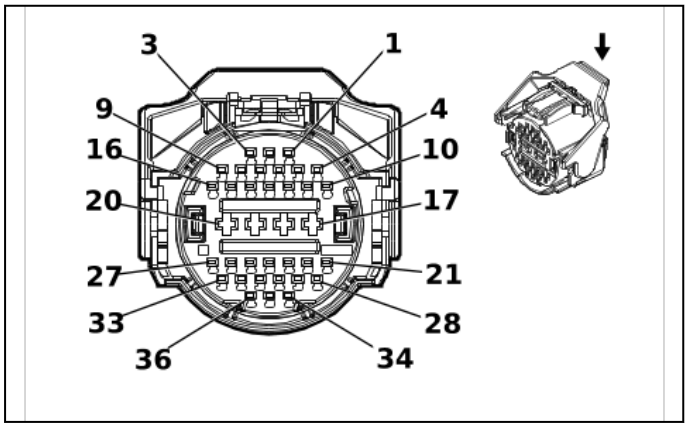

3621473

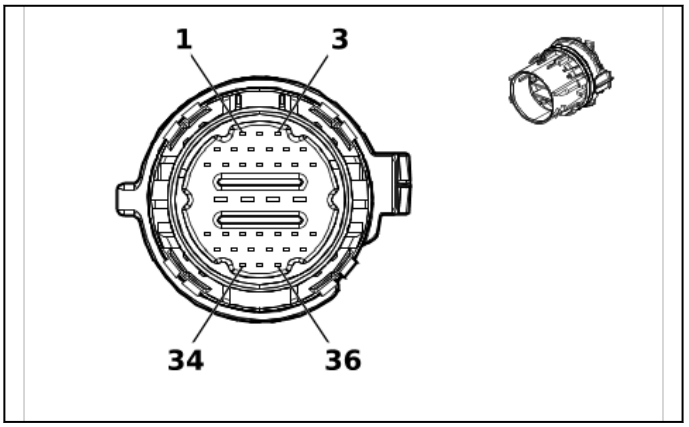

6493751

Connector Part Information

- Harness Type: Engine Wiring Harness
- OEM Connector: 2138314-1
- Service Connector: 19329922
- Description: 36-Way F 1.2 MCON-CB, 2.8 MCP Series, Sealed(BK)

Connector Part Information

- Harness Type: Automatic Transmission Wiring Harness
- OEM Connector: 2356151-9
- Service Connector: Service by Harness - See Part Catalog
- Description: 36-Way M 1.2 MCON-CB, 2.8 MCP Series, Sealed(NA)

Terminal Part Information

Terminal Type ID	Terminated Lead	Diagnostic Test Probe	Terminal Removal Tool
I	13575368	J-35616-35 (VT)	J-38125-556
II	19300445	J-35616-12 (BU)	J-38125-214
III	Not required	J-35616-17 (L-GN)	No Tool Required

X175 Engine Wiring Harness to Automatic Transmission Wiring Harness

Pin	Size	Color	Circuit	Terminal Type ID	Option	Function	Pin	Size	Color	Circuit	Terminal Type ID	Option
(1) 1	(1) 0.5	(1) GN/WH	(1) 6380	(1) II	(1) —	(1) Torque Converter Clutch Enable Solenoid Valve A Control	(1) 1	(1) 0.5	(1) GN/WH	(1) 6380	(1) III	(1) —
2	—	—	—	—	—	Not Occupied	2	—	—	—	—	—
(3) 3	(3) 0.5	(3) VT/WH	(3) 422	(3) II	(3) —	(3) Torque Converter Clutch Solenoid Valve Control	(3) 3	(3) 0.5	(3) VT/WH	(3) 422	(3) III	(3) —
(4) 4	(4) 0.5	(4) GN/WH	(4) 1530	(4) II	(4) —	(4) Transmission Line Pressure Control Solenoid Valve Control	(4) 4	(4) 0.5	(4) GN/WH	(4) 1530	(4) III	(4) —
(5) 5	(5) 0.5	(5) BN	(5) 6400	(5) II	(5) —	(5) Clutch Solenoid Valve A Control	(5) 5	(5) 0.5	(5) BN	(5) 6400	(5) III	(5) —

Pin	Size	Color	Circuit	Terminal Type ID	Option	Function	Pin	Size	Color	Circuit	Terminal Type ID	Option
(6) 6	(6) 0.5	(6) BU	(6) 6401	(6) II	(6) —	(6) Clutch Solenoid Valve B Control	(6) 6	(6) 0.5	(6) BU	(6) 6401	(6) III	(6) —
(7) 7	(7) 0.5	(7) YE / BN	(7) 6210	(7) II	(7) —	(7) Torque Converter Clutch Enable Solenoid Valve B Control	(7) 7	(7) 0.5	(7) YE / BN	(7) 6210	(7) III	(7) —
8 - 9	—	—	—	—	—	Not Occupied	8 - 9	—	—	—	—	—
(10) 10	(10) 0.5	(10) G Y	(10) 6402	(10) II	(10) —	(10) Clutch Solenoid Valve C Control	(10) 10	(10) 0.5	(10) G Y	(10) 6402	(10) III	(10) —
(11) 11	(11) 0.5	(11) B K / BN	(11) 586	(11) II	(11) —	(11) Transmission Fluid Temperature Sensor Low Reference	(11) 11	(11) 0.5	(11) B K / BN	(11) 586	(11) III	(11) —
(12) 12	(12) 0.5	(12) B N / WH	(12) 585	(12) II	(12) —	(12) Transmission Fluid Temperature Sensor Signal	(12) 12	(12) 0.5	(12) B N / WH	(12) 585	(12) III	(12) —
(13) 13	(13) 0.5	(13) WH	(13) 4508	(13) II	(13) —	(13) Transmission Clutch G Control	(13) 13	(13) 0.5	(13) WH	(13) 4508	(13) III	(13) —
(14) 14	(14) 0.5	(14) WH / BU	(14) 4507	(14) II	(14) —	(14) Transmission Clutch H Control	(14) 14	(14) 0.5	(14) WH / BU	(14) 4507	(14) III	(14) —
15 - 17	—	—	—	—	—	Not Occupied	15 - 17	—	—	—	—	—
(18) 18	(18) 0.5	(18) G N / GY	(18) 6387	(18) I	(18) —	(18) Transmission High Side Driver 1 Control	(18) 18	(18) 2.5	(18) G N / GY	(18) 6387	(18) III	(18) —
(19) 19	(19) 0.5 (19) 0.75	(19) G Y / BN (19) G Y / BN	(19) 6388 (19) 6388	(19) I (19) I	(19) L8T (19) LV1	(19) Transmission High Side Driver 2 Control (19) Transmission High Side Driver 2 Control	(19) 19	(19) 2.5	(19) G Y / BN	(19) 6388	(19) III	(19) —
20	—	—	—	—	—	Not Occupied	20	—	—	—	—	—
(21) 21	(21) 0.5	(21) G N / YE	(21) 3337	(21) II	(21) —	(21) Transmission Internal Mode Switch Mode Control Y	(21) 21	(21) 0.5	(21) G N / YE	(21) 3337	(21) III	(21) —
(22) 22	(22) 0.5	(22) B U / WH	(22) 3338	(22) II	(22) —	(22) Transmission Internal Mode Switch Mode Control X	(22) 22	(22) 0.5	(22) B U / WH	(22) 3338	(22) III	(22) —
23	—	—	—	—	—	Not Occupied	23	—	—	—	—	—
(24) 24	(24) 0.5	(24) G Y / BU	(24) 6358	(24) II	(24) —	(24) Output Speed Signal	(24) 24	(24) 0.5	(24) G Y / BU	(24) 6358	(24) III	(24) —

Pin	Size	Color	Circuit	Terminal Type ID	Option	Function	Pin	Size	Color	Circuit	Terminal Type ID	Option
(25) 25	(25) 0.5	(25) YE / GN	(25) 41 70	(25) II	(25) —	(25) Transmission Output Shaft Speed Sensor Circuit 9V Reference	(25) 25	(25) 0.5	(25) YE / GN	(25) 41 70	(25) III	(25) —
(26) 26	(26) 0.5	(26) GN / YE	(26) 63 53	(26) II	(26) —	(26) Input Speed Signal	(26) 26	(26) 0.5	(26) GN / YE	(26) 63 53	(26) III	(26) —
(27) 27	(27) 0.5	(27) YE / BU	(27) 41 71	(27) II	(27) —	(27) Transmission Input Shaft Speed Sensor Circuit 9V Reference	(27) 27	(27) 0.5	(27) YE / BU	(27) 41 71	(27) III	(27) —
28	—	—	—	—	—	Not Occupied	28	—	—	—	—	—
(29) 29	(29) 0.5	(29) WH / RD	(29) 48 0	(29) II	(29) —	(29) Engine Control Vehicle Sensors 5 Volt Reference 1	(29) 29	(29) 0.5	(29) WH / RD	(29) 59 6	(29) III	(29) —
(30) 30	(30) 0.5	(30) BK / GY	(30) 62 6	(30) II	(30) —	(30) Engine Control Vehicle Sensors Low Reference 1	(30) 30	(30) 0.5	(30) BK / GY	(30) 39 27	(30) III	(30) —
31	—	—	—	—	—	Not Occupied	31	—	—	—	—	—
(32) 32	(32) 0.5	(32) GN / VT	(32) 45 10	(32) II	(32) —	(32) Transmission Intermediate Speed Signal	(32) 32	(32) 0.5	(32) GN / VT	(32) 45 10	(32) III	(32) —
33	—	—	—	—	—	Not Occupied	33	—	—	—	—	—
(34) 34	(34) 0.5	(34) GY / RD	(34) 10 817	(34) II	(34) —	(34) Lubricant Circuit Pressure Sensor 5 Volt Reference	(34) 34	(34) 0.5	(34) GY / RD	(34) 10 817	(34) III	(34) —
(35) 35	(35) 0.5	(35) BU / BK	(35) 10 819	(35) II	(35) —	(35) Lubricant Circuit Pressure Sensor Low Reference	(35) 35	(35) 0.5	(35) BU / BK	(35) 10 819	(35) III	(35) —
(36) 36	(36) 0.5	(36) GN / YE	(36) 10 816	(36) II	(36) —	(36) Lubricant Circuit Pressure Sensor Signal	(36) 36	(36) 0.5	(36) GN / YE	(36) 10 816	(36) III	(36) —

X176 Automatic Transmission Wiring Harness to Automatic Transmission Wiring Harness

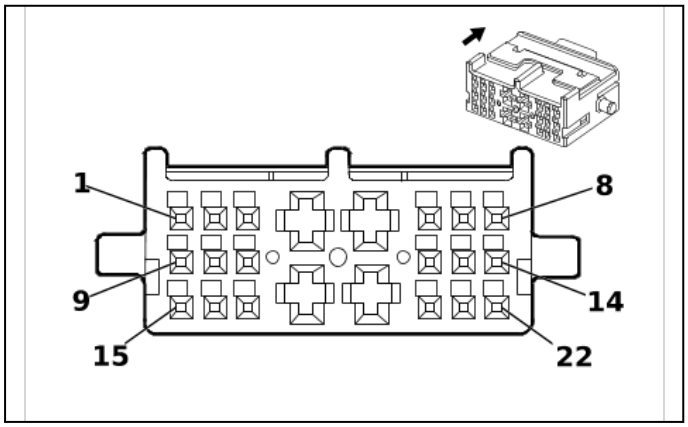

3977748

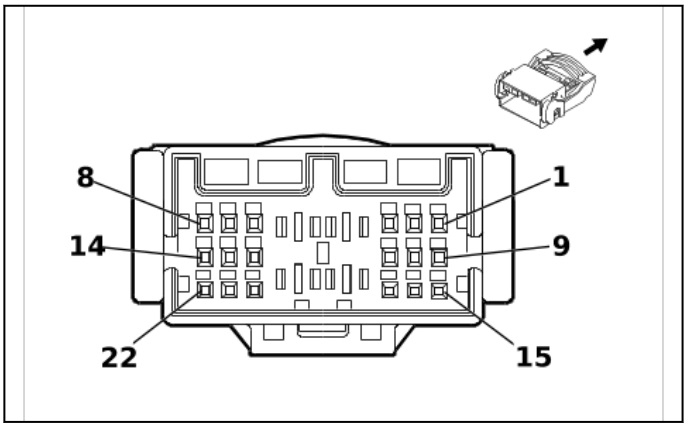

3977770

Connector Part Information

- Harness Type: Automatic Transmission Wiring Harness
- OEM Connector: 1897543-1
- Service Connector: Service by Harness - See Part Catalog
- Description: 22-Way F 0.64 Micro-Quadlock, 2.8 Micro-Power Series(NA)

Connector Part Information

- Harness Type: Automatic Transmission Wiring Harness
- OEM Connector: 1897540-1
- Service Connector: Service by Harness - See Part Catalog
- Description: 22-Way M 0.64 Micro-Quadlock, 2.8 Micro-Power Series(NA)

Terminal Part Information

Terminal Type ID	Terminated Lead	Diagnostic Test Probe	Terminal Removal Tool
I	Not required	J-35616-35 (VT)	No Tool Required
II	Not required	J-35616-64B (L-BU)	No Tool Required
III	Not required	J-35616-5 (PU)	No Tool Required
IV	Not required	J-35616-65B (L-BU)	No Tool Required

X176 Automatic Transmission Wiring Harness to Automatic Transmission Wiring Harness

Pin	Size	Color	Circuit	Terminal Type ID	Option	Function	Pin	Size	Color	Circuit	Terminal Type ID	Option
(1) 1	(1) 0.5	(1) GN / WH	(1) 6380	(1) II	(1) —	(1) Torque Converter Clutch Enable Solenoid Valve A Control	(1) 1	(1) 0.5	(1) GN / WH	(1) 6380	(1) IV	(1) —
(2) 2	(2) 0.5	(2) BU / WH	(2) 3338	(2) II	(2) —	(2) Transmission Internal Mode Switch Mode Control X	(2) 2	(2) 0.5	(2) BU / WH	(2) 3338	(2) IV	(2) —
(3) 3	(3) 0.5	(3) GY / RD	(3) 10817	(3) II	(3) —	(3) Lubricant Circuit Pressure Sensor 5 Volt Reference	(3) 3	(3) 0.5	(3) GY / RD	(3) 10817	(3) IV	(3) —
(4) 4	(4) 2.5	(4) GN / GY	(4) 6387	(4) I	(4) —	(4) Transmission High Side Driver 1 Control	(4) 4	(4) 2.5	(4) GN / GY	(4) 6387	(4) III	(4) —
(5) 5	(5) 1.5	(5) RD / GN	(5) 40	(5) I	(5) —	(5) Battery Positive Voltage	(5) 5	(5) —	(5) —	(5) —	(5) —	(5) —

Pin	Size	Color	Circuit	Terminal Type ID	Option	Function	Pin	Size	Color	Circuit	Terminal Type ID	Option
(6) 6	(6) 0.5	(6) WH / RD	(6) 596	(6) II	(6) —	(6) 5V Reference	(6) 6	(6) 0.5	(6) WH / RD	(6) 596	(6) IV	(6) —
(7) 7	(7) 0.5	(7) WH / BU	(7) 4507	(7) II	(7) —	(7) Transmission Clutch H Control	(7) 7	(7) 0.5	(7) WH / BU	(7) 4507	(7) IV	(7) —
(8) 8	(8) 0.5	(8) GN / WH	(8) 1530	(8) II	(8) —	(8) Transmission Line Pressure Control Solenoid Valve Control	(8) 8	(8) 0.5	(8) GN / WH	(8) 1530	(8) IV	(8) —
(9) 9	(9) 0.5	(9) WH	(9) 4508	(9) II	(9) —	(9) Transmission Clutch G Control	(9) 9	(9) 0.5	(9) WH	(9) 4508	(9) IV	(9) —
(10) 10	(10) 0.5	(10) YE / BN	(10) 6210	(10) II	(10) —	(10) Torque Converter Clutch Enable Solenoid Valve B Control	(10) 10	(10) 0.5	(10) YE / BN	(10) 6210	(10) IV	(10) —
(11) 11	(11) 0.5	(11) GN / YE	(11) 3337	(11) II	(11) —	(11) Transmission Internal Mode Switch Mode Control Y	(11) 11	(11) 0.5	(11) GN / YE	(11) 3337	(11) IV	(11) —
(12) 12	(12) 0.5	(12) BU / BK	(12) 10819	(12) II	(12) —	(12) Lubricant Circuit Pressure Sensor Low Reference	(12) 12	(12) 0.5	(12) BU / BK	(12) 10819	(12) IV	(12) —
(13) 13	(13) 0.5	(13) GY	(13) 6402	(13) II	(13) —	(13) Clutch Solenoid Valve C Control	(13) 13	(13) 0.5	(13) GY	(13) 6402	(13) IV	(13) —
(14) 14	(14) 0.5	(14) VT / WH	(14) 422	(14) II	(14) —	(14) Torque Converter Clutch Solenoid Valve Control	(14) 14	(14) 0.5	(14) VT / WH	(14) 422	(14) IV	(14) —
(15) 15	(15) 0.5	(15) BN / WH	(15) 585	(15) II	(15) —	(15) Transmission Fluid Temperature Sensor Signal	(15) 15	(15) 0.5	(15) BN / WH	(15) 585	(15) IV	(15) —
(16) 16	(16) 0.5	(16) BK / BN	(16) 586	(16) II	(16) —	(16) Transmission Fluid Temperature Sensor Low Reference	(16) 16	(16) 0.5	(16) BK / BN	(16) 586	(16) IV	(16) —
(17) 17	(17) 0.5	(17) GN / YE	(17) 10816	(17) II	(17) —	(17) Lubricant Circuit Pressure Sensor Signal	(17) 17	(17) 0.5	(17) GN / YE	(17) 10816	(17) IV	(17) —
(18) 18	(18) 2.5	(18) GY / BN	(18) 6388	(18) I	(18) —	(18) Transmission High Side Driver 2 Control	(18) 18	(18) 2.5	(18) GY / BN	(18) 6388	(18) III	(18) —
19	—	—	—	—	—	Not Occupied	19	—	—	—	—	—

Pin	Size	Color	Circuit	Terminal Type ID	Option	Function	Pin	Size	Color	Circuit	Terminal Type ID	Option
(20) 20	(20) 0.5	(20) B K / GY	(20) 39 27	(20) II	(20) —	(20) Transmission Internal Mode Switch Feedback Signal	(20) 20	(20) 0.5	(20) B K / GY	(20) 39 27	(20) IV	(20) —
(21) 21	(21) 0.5	(21) B N	(21) 64 00	(21) II	(21) —	(21) Clutch Solenoid Valve A Control	(21) 21	(21) 0.5	(21) B N	(21) 64 00	(21) IV	(21) —
(22) 22	(22) 0.5	(22) B U	(22) 64 01	(22) II	(22) —	(22) Clutch Solenoid Valve B Control	(22) 22	(22) 0.5	(22) B U	(22) 64 01	(22) IV	(22) —

X178 Automatic Transmission Wiring Harness to Automatic Transmission Output Speed Sensor Wiring Harness

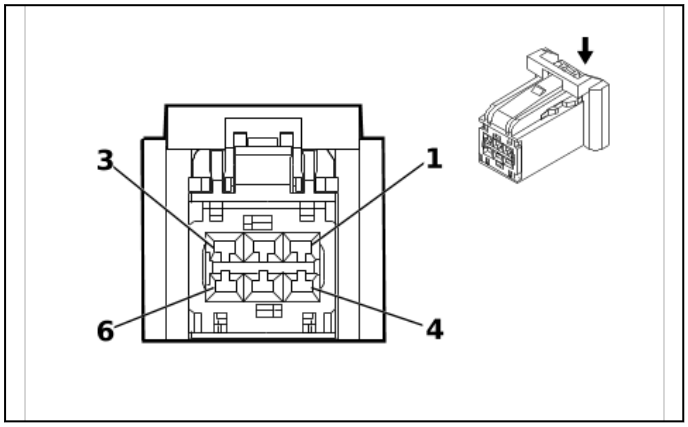

3977938

Connector Part Information

- Harness Type: Automatic Transmission Wiring Harness
- OEM Connector: 33134940
- Service Connector: Service by Harness - See Part Catalog
- Description: 6-Way F 1.2 OCS Series(NA)

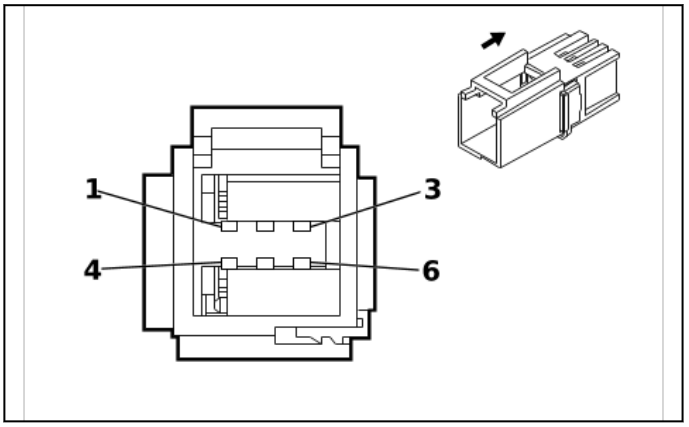

3977959

Connector Part Information

- Harness Type: Automatic Transmission Output Speed Sensor Wiring Harness
- OEM Connector: 13955963
- Service Connector: Service by Harness - See Part Catalog
- Description: 6-Way M 0.64 II Series(GY)

Terminal Part Information

Terminal Type ID	Terminated Lead	Diagnostic Test Probe	Terminal Removal Tool
I	Not required	J-35616-16 (L-GN)	No Tool Required
II	Not required	J-35616-64B (L-BU)	No Tool Required

X178 Automatic Transmission Wiring Harness to Automatic Transmission Output Speed Sensor Wiring Harness

Pin	Size	Color	Circuit	Terminal Type ID	Option	Function	Pin	Size	Color	Circuit	Terminal Type ID	Option
(1) 1	(1) 0.5	(1) GY / BU	(1) 6358	(1) I	(1) —	(1) Output Speed Signal	(1) 1	(1) 0.5	(1) YE	(1) 6358	(1) II	(1) —
(2) 2	(2) 0.5	(2) YE / GN	(2) 4170	(2) I	(2) —	(2) Transmission Output Shaft Speed Sensor Circuit 9V Reference	(2) 2	(2) 0.5	(2) RD	(2) 4170	(2) II	(2) —
(3) 3	(3) 0.5	(3) YE / GN	(3) 4170	(3) I	(3) —	(3) Transmission Output Shaft Speed Sensor Circuit 9V Reference	(3) 3	(3) 0.5	(3) WH	(3) 4170	(3) II	(3) —
(4) 4	(4) 0.5	(4) YE / BU	(4) 4171	(4) I	(4) —	(4) Transmission Input Shaft Speed Sensor Circuit 9V Reference	(4) 4	(4) 0.5	(4) WH	(4) 4171	(4) II	(4) —
(5) 5	(5) 0.5	(5) GN / YE	(5) 6353	(5) I	(5) —	(5) Input Speed Signal	(5) 5	(5) 0.5	(5) GN	(5) 6353	(5) II	(5) —
(6) 6	(6) 0.5	(6) GN / VT	(6) 4510	(6) I	(6) —	(6) Transmission Intermediate Speed Signal	(6) 6	(6) 0.5	(6) BK	(6) 4510	(6) II	(6) —

X185 Instrument Panel Wiring Harness to Chassis Wiring Harness

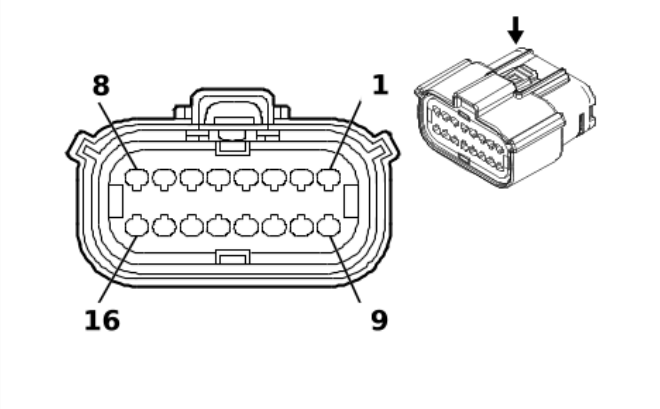

2548389

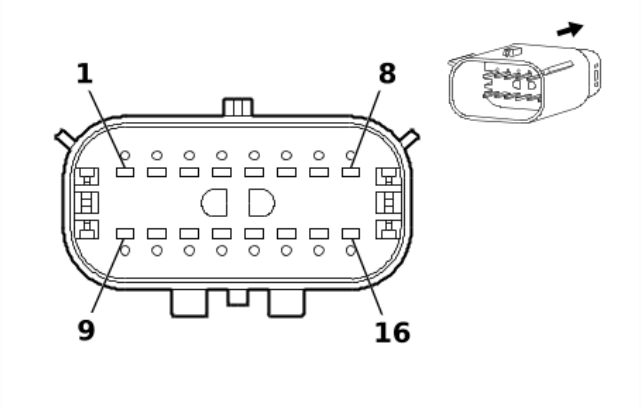

2548390

Connector Part Information
- Harness Type: Instrument Panel Wiring Harness
- OEM Connector: 33472-1606
- Service Connector: 13584788
- Description: 16-Way F 1.5 MX Series, Sealed(BK)

Connector Part Information
- Harness Type: Chassis Wiring Harness
- OEM Connector: 33482-8601
- Service Connector: 19369662
- Description: 16-Way M 1.5 MX Series, Sealed(BK)

Terminal Part Information

Terminal Type ID	Terminated Lead	Diagnostic Test Probe	Terminal Removal Tool
I	85528055	J-35616-2A (GY)	J-38125-217
II	86800300	J-35616-3 (GY)	J-38125-217

X185 Instrument Panel Wiring Harness to Chassis Wiring Harness

Pin	Size	Color	Circuit	Terminal Type ID	Option	Function	Pin	Size	Color	Circuit	Terminal Type ID	Option
(1) 1	(1) 0.5	(1) RD / GN	(1) 3140	(1) I	(1) —	(1) Battery Positive Voltage	(1) 1	(1) 0.5	(1) RD / GN	(1) 3140	(1) II	(1) —
(2) 2	(2) 0.5	(2) GN	(2) 5060	(2) I	(2) —	(2) Low Speed GMLAN Serial Data	(2) 2	(2) 0.5	(2) GN	(2) 5060	(2) II	(2) —
3 - 7	—	—	—	—	—	Not Occupied	3 - 7	—	—	—	—	—
(8) 8	(8) 0.5	(8) BU / YE	(8) 6105	(8) I	(8) —	(8) High Speed GMLAN Serial Data [+] 2	(8) 8	(8) 0.5	(8) BU / YE	(8) 6105	(8) II	(8) —
(9) 9	(9) 0.5	(9) GY / YE	(9) 5853	(9) I	(9) —	(9) Driver Side Side Object Detection LED Signal 1	(9) 9	(9) 0.5	(9) GY / YE	(9) 5853	(9) II	(9) —
(10) 10	(10) 0.5	(10) GY	(10) 5861	(10) I	(10) —	(10) Passenger Side Object Detection LED Signal 1	(10) 10	(10) 0.5	(10) GY	(10) 5861	(10) II	(10) —
11 - 14	—	—	—	—	—	Not Occupied	11 - 14	—	—	—	—	—
(15) 15	(15) 0.5	(15) GN / BN	(15) 2087	(15) I	(15) —	(15) Multi-axis Acceleration Sensor Supply Voltage	(15) 15	(15) 0.5	(15) GN / BN	(15) 2087	(15) II	(15) —
(16) 16	(16) 0.5	(16) WH	(16) 6106	(16) I	(16) —	(16) High Speed GMLAN Serial Data [-] 2	(16) 16	(16) 0.5	(16) WH	(16) 6106	(16) II	(16) —

X190 Accessory Wiring Harness to Accessory Power Fuse Block Rear Wiring Harness Extension Harness (9L7)

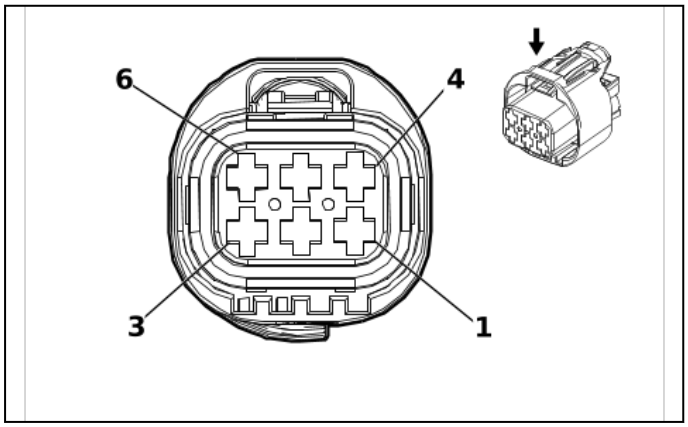

2042938

Connector Part Information

- Harness Type: Accessory Wiring Harness
- OEM Connector: 1452327-1
- Service Connector: Service by Harness - See Part Catalog
- Description: 6-Way F 2.8 Junior Power Timer Series, Sealed(BK)

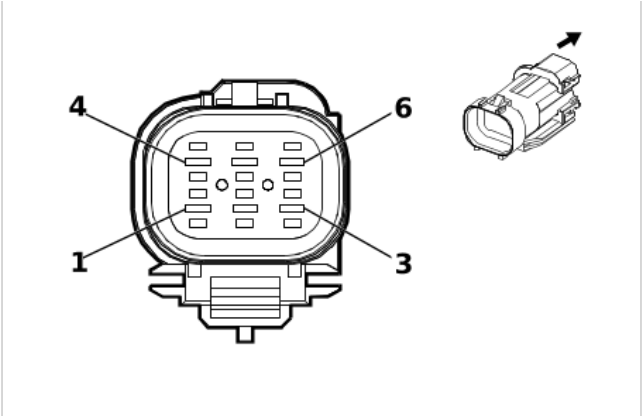

2042939

Connector Part Information

- Harness Type: Accessory Power Fuse Block Rear Wiring Harness Extension Harness
- OEM Connector: 1452324-1
- Service Connector: Service by Harness - See Part Catalog
- Description: 6-Way M 2.8 Series, Sealed(BK)

Terminal Part Information

Terminal Type ID	Terminated Lead	Diagnostic Test Probe	Terminal Removal Tool
I	Not required	J-35616-4A (PU)	No Tool Required
II	Not required	J-35616-5 (PU)	No Tool Required

X190 Accessory Wiring Harness to Accessory Power Fuse Block Rear Wiring Harness Extension Harness (9L7)

Pin	Size	Color	Circuit	Terminal Type ID	Option	Function	Pin	Size	Color	Circuit	Terminal Type ID	Option
(1) 1	(1) 0.5	(1) BU	(1) 6842	(1) I	(1) —	(1) Auxiliary Device Relay 1 Control	(1) 1	(1) 0.5	(1) BK / BU	(1) 6842	(1) II	(1) —
(2) 2	(2) 2.5	(2) GN	(2) 6839	(2) I	(2) —	(2) Auxiliary Device 1 Switched Voltage	(2) 2	(2) 2.5	(2) GN	(2) 6839	(2) II	(2) —
(3) 3	(3) 0.5	(3) BU	(3) 6843	(3) I	(3) —	(3) Auxiliary Device Relay 2 Control	(3) 3	(3) 0.5	(3) BU	(3) 6843	(3) II	(3) —
(4) 4	(4) 2.5	(4) GN	(4) 6840	(4) I	(4) —	(4) Auxiliary Device 2 Switched Voltage	(4) 4	(4) 2.5	(4) GN	(4) 6840	(4) II	(4) —
(5) 5	(5) 1	(5) RD / WH	(5) 5440	(5) I	(5) —	(5) Battery Positive Voltage	(5) 5	(5) 1	(5) RD / WH	(5) 5440	(5) II	(5) —
6	—	—	—	—	—	Not Occupied	6	—	—	—	—	—

X200 Steering Wheel Air Bag Coil Jumper Wiring Harness to Instrument Panel Wiring Harness

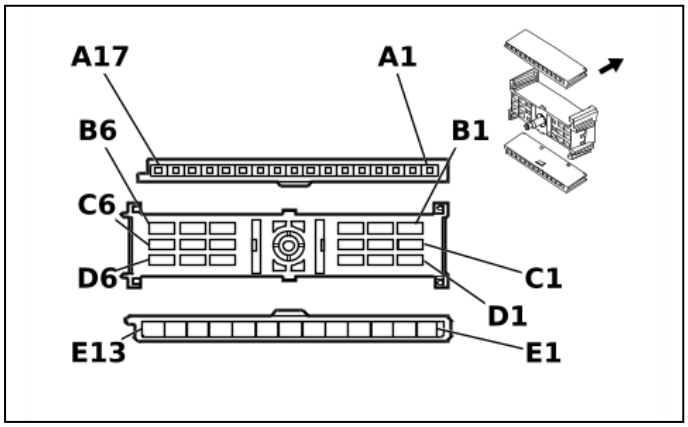

794237

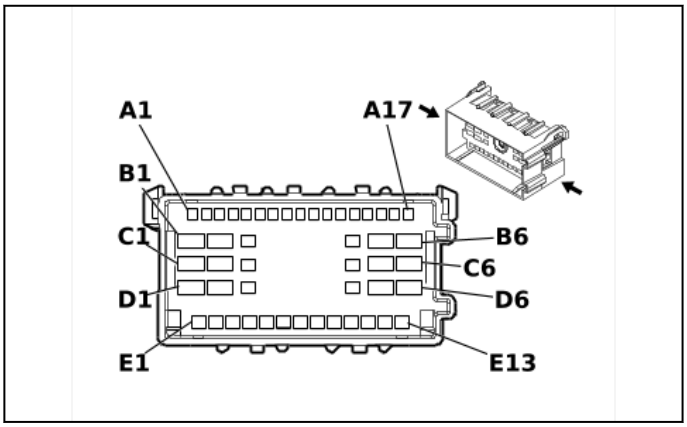

510556

Connector Part Information

- Harness Type: Steering Wheel Air Bag Coil Jumper Wiring Harness
- OEM Connector: Not Available
- Service Connector: Service by Harness - See Part Catalog
- Description: 48-Way F

Connector Part Information

- Harness Type: Instrument Panel Wiring Harness
- OEM Connector: 15492579
- Service Connector: 86532982
- Description: 48-Way M 150, 280, 630 Metri-Pack Series(BK)

Terminal Part Information

Terminal Type ID	Terminated Lead	Diagnostic Test Probe	Terminal Removal Tool
I	Not required	No Tool Required	No Tool Required
II	13505668	J-35616-3 (GY)	J-38125-12A
III	13575715	J-35616-5 (PU)	J-38125-11A
IV	19330180	J-35616-43 (RD)	J-38125-11A

X200 Steering Wheel Air Bag Coil Jumper Wiring Harness to Instrument Panel Wiring Harness

Pin	Size	Color	Circuit	Terminal Type ID	Option	Function	Pin	Size	Color	Circuit	Terminal Type ID	Option
A1	0.35	TN	28	I	—	Horn Relay Control	A1	0.35	TN	28	II	—
A2	—	—	—	—	—	Not Occupied	A2	—	—	—	—	—
A3	0.35	PK	1444	I	—	12V Reference	A3	0.35	PK	1444	II	—
A4	0.35	PU	5526	I	—	Tap Up/Tap Down Switch Signal	A4	0.35	PU	5526	II	—
A5	—	—	—	—	—	Not Occupied	A5	—	—	—	—	—
A6	0.5	GN / BN	2087	I	—	Multi-axis Acceleration Sensor Supply Voltage	A6	0.5	GN / BN	2087	II	—
A7 - A8	—	—	—	—	—	Not Occupied	A7 - A8	—	—	—	—	—
A9	0.35	PK	3	I	—	Run/Crank Ignition 1 Voltage	A9	0.35	PK	3	II	—
A10	—	—	—	—	—	Not Occupied	A10	—	—	—	—	—

Pin	Size	Color	Circuit	Terminal Type ID	Option	Function	Pin	Size	Color	Circuit	Terminal Type ID	Option
A11	0.35	GN	6818	I	—	Steering Wheel Controls Signal 1	A11	0.35	GN	6818	II	—
A12	—	—	—	—	—	Not Occupied	A12	—	—	—	—	—
A13	0.35	GN / WH	7158	I	—	Cruise Control Indicator Dimming Signal	A13	0.35	GN / WH	7158	II	—
A14	—	—	—	—	—	Not Occupied	A14	—	—	—	—	—
A15	0.35	BN	6136	I	—	Control	A15	0.35	BN	6136	II	—
A16	—	—	—	—	—	Not Occupied	A16	—	—	—	—	—
A17	0.35	GY	1884	I	—	Cruise Control Set/ Coast/ Resume/ Accelerate Switch Signal	A17	0.35	GY	1884	II	—
B1	0.35	RD / WH	540	I	—	Battery Positive Voltage	B1	0.35	RD / WH	540	IV	—
B2	—	—	—	—	—	Not Occupied	B2	—	—	—	—	—
B3	0.35	WH	111	I	—	Hazard Warning Switch Signal	B3	0.35	WH	111	III	—
B4 - B5	—	—	—	—	—	Not Occupied	B4 - B5	—	—	—	—	—
B6	0.35	PK	1020	I	—	Off/Run/ Crank Ignition Voltage	B6	0.35	PK	1020	IV	—
C1	0.35	WH	530	I	—	Off/Run/ Crank Ignition Voltage	C1	0.35	WH	530	IV	—
C2	—	—	—	—	—	Not Occupied	C2	—	—	—	—	—
C3	0.35	YE	307	I	—	Headlamp Switch Flash Signal	C3	0.35	YE	307	III	—
C4 - C5	—	—	—	—	—	Not Occupied	C4 - C5	—	—	—	—	—
C6	0.35	BN	4	I	—	Accessory Ignition Voltage	C6	0.35	BN	4	IV	—
D1	0.35	TN / BK	6009	I	—	Windshield Wiper Switch Low Reference	D1	0.35	TN / BK	6009	IV	—
D2	—	—	—	—	—	Not Occupied	D2	—	—	—	—	—
D3	0.35	YE	525	I	—	High Beam Select Switch Low Beam Signal	D3	0.35	YE	525	III	—
D4	0.5	TN / WH	816	I	—	Brake Transmission Shift Interlock Solenoid Actuator Control	D4	0.5	TN / WH	816	III	—

Pin	Size	Color	Circuit	Terminal Type ID	Option	Function	Pin	Size	Color	Circuit	Terminal Type ID	Option
D5	—	—	—	—	—	Not Occupied	D5	—	—	—	—	—
D6	0.35	PK	94	I	—	Windshield Washer Switch Signal	D6	0.35	PK	94	IV	—
E1	0.5	BK	350	I	—	Ground	E1	0.5	BK	350	III	—
E2	—	—	—	—	—	Not Occupied	E2	—	—	—	—	—
E3	0.5	BK / WH	351	I	—	Signal Ground	E3	0.5	BK / WH	351	III	—
E4	0.5	BU / YE	6105	I	—	High Speed GMLAN Serial Data [+] 2	E4	0.5	BU / YE	6105	III	—
E5	0.5	WH	6106	I	—	High Speed GMLAN Serial Data [-] 2	E5	0.5	WH	6106	III	—
E6	0.5	BU / YE	6105	I	—	High Speed GMLAN Serial Data [+] 2	E6	0.5	BU / YE	6105	III	—
E7	0.5	WH	6106	I	—	High Speed GMLAN Serial Data [-] 2	E7	0.5	WH	6106	III	—
E8	0.35	GN	663	I	—	Hazard Switch Left Turn Signal	E8	0.35	GN	663	III	—
E9	0.35	TN	664	I	—	Hazard Switch Right Turn Signal	E9	0.35	TN	664	III	—
E10	—	—	—	—	—	Not Occupied	E10	—	—	—	—	—
E11	0.35	BU	1714	I	—	Windshield Wiper Switch Low Signal	E11	0.35	BU	1714	III	—
E12	0.35	GN	1715	I	—	Windshield Wiper Switch High Signal	E12	0.35	GN	1715	III	—
E13	0.35	GN	5060	I	—	Low Speed GMLAN Serial Data	E13	0.35	GN	5060	III	—

X202 Instrument Panel Wiring Harness to Engine Wiring Harness

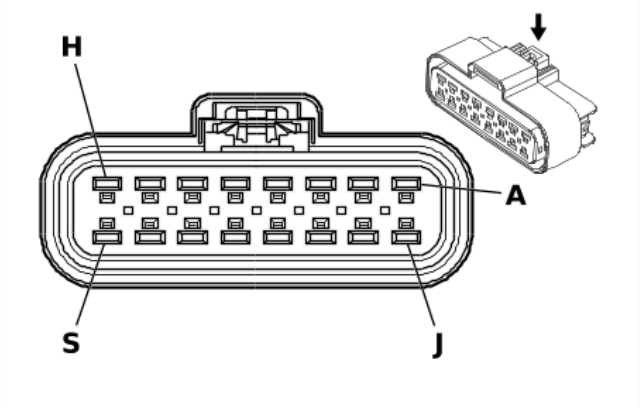

847252

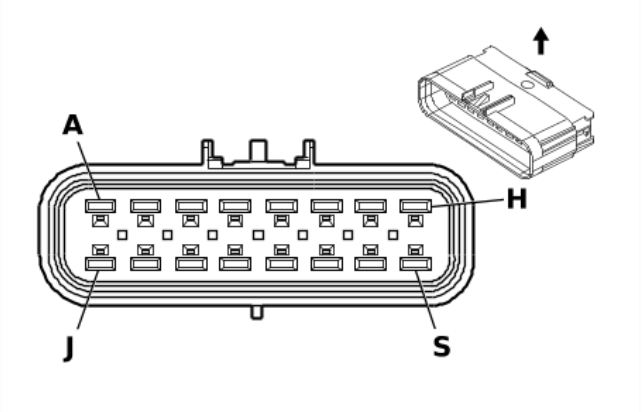

847270

Connector Part Information
- Harness Type: Instrument Panel Wiring Harness
- OEM Connector: 15326666
- Service Connector: 15326666
- Description: 16-Way F 280 GT Series, Sealed(BK)

Connector Part Information
- Harness Type: Engine Wiring Harness
- OEM Connector: 15326667
- Service Connector: 88986347
- Description: 16-Way M 280 GT Series, Sealed(BK)

Terminal Part Information

Terminal Type ID	Terminated Lead	Diagnostic Test Probe	Terminal Removal Tool
I	13575404	J-35616-4A (PU)	J-38125-215A
II	13580824	J-35616-4A (PU)	J-38125-553
III	13575353	J-35616-5 (PU)	J-38125-215A

X202 Instrument Panel Wiring Harness to Engine Wiring Harness

Pin	Size	Color	Circuit	Terminal Type ID	Option	Function	Pin	Size	Color	Circuit	Terminal Type ID	Option
A	0.5	YE / VT	2378	II	—	Right Rear Outer Parking Assist Sensor Signal	A	0.5	YE / VT	2378	III	—
B	0.5	YE / WH	2377	II	—	Right Rear Middle Parking Assist Sensor Signal	B	0.5	YE / WH	2377	III	—
C	0.5 0.75	RD / WH RD / WH	840 840	II I	— —	Battery Positive Voltage Battery Positive Voltage	C	0.5	RD / BU	840	III	—
D - E	—	—	—	—	—	Not Occupied	D - E	—	—	—	—	—
F	0.5	BN	5360	II	—	Brake Apply Sensor Low Reference	F	0.5	BK / GY	626	III	—
G	0.5	BN / WH	2374	II	—	Object Sensor Voltage Reference	G	0.5	BN / WH	2374	III	—
H	0.5	YE	2375	II	—	Left Rear Outer Parking Assist Sensor Signal	H	0.5	YE	2375	III	—

Pin	Size	Color	Circuit	Terminal Type ID	Option	Function	Pin	Size	Color	Circuit	Terminal Type ID	Option
J	0.5	BK / GY	2379	II	—	Object Sensor Low Reference	J	0.5	BK / GY	2379	III	—
K - L	—	—	—	—	—	Not Occupied	K - L	—	—	—	—	—
M	0.5	RD / WH	4892	II	—	Auxiliary Battery Relay Control	M	0.5	RD / WH	4892	III	—
N	—	—	—	—	—	Not Occupied	N	—	—	—	—	—
P	0.5	YE	5361	II	—	Brake Apply Sensor Signal	P	0.5	WH / GN	5380	III	—
R	0.5	WH	5359	II	—	Brake Apply Sensor Control	R	0.5	BU / RD	460	III	—
S	0.5	YE / BU	2376	II	—	Left Rear Middle Parking Assist Sensor Signal	S	0.5	YE / BU	2376	III	—

X204 Body Wiring Harness to Roof Console Wiring Harness

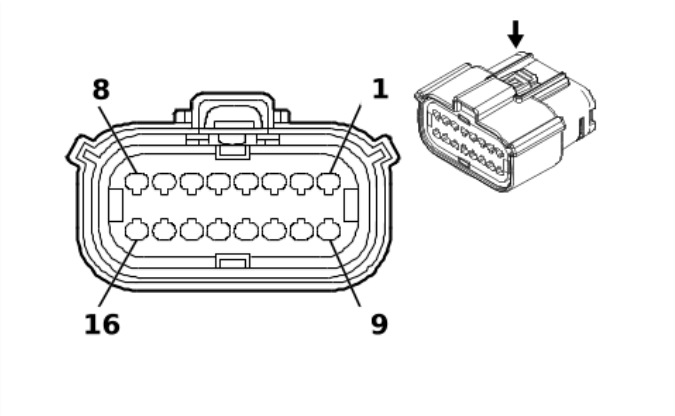

2548389

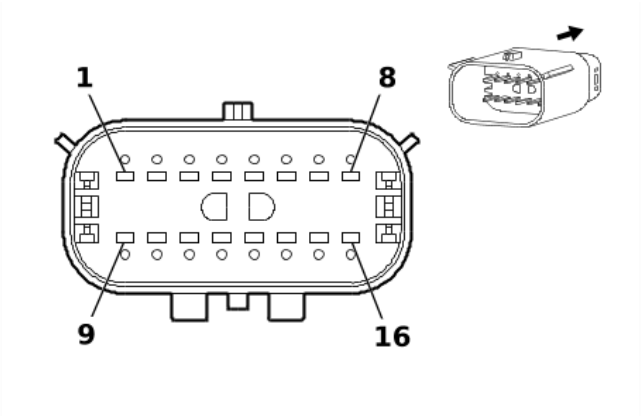

2548390

Connector Part Information
- Harness Type: Body Wiring Harness
- OEM Connector: 33472-1606
- Service Connector: 13584788
- Description: 16-Way F 1.5 MX Series, Sealed(BK)

Connector Part Information
- Harness Type: Roof Console Wiring Harness
- OEM Connector: 33482-8601
- Service Connector: 19369662
- Description: 16-Way M 1.5 MX Series, Sealed(BK)

Terminal Part Information

Terminal Type ID	Terminated Lead	Diagnostic Test Probe	Terminal Removal Tool
I	85528055	J-35616-2A (GY)	J-38125-217
II	86800300	J-35616-3 (GY)	J-38125-217

X204 Body Wiring Harness to Roof Console Wiring Harness

Pin	Size	Color	Circuit	Terminal Type ID	Option	Function	Pin	Size	Color	Circuit	Terminal Type ID	Option
(1) 1	(1) 0.5	(1) BU / YE	(1) 7641	(1) I	(1) —	(1) Frontview Camera 2 Signal [+]	(1) 1	(1) 0.5	(1) BU / YE	(1) 7641	(1) II	(1) —
(2) 2	(2) 0.5	(2) WH / YE	(2) 7642	(2) I	(2) —	(2) Frontview Camera 2 Signal [-]	(2) 2	(2) 0.5	(2) WH / YE	(2) 7642	(2) II	(2) —
(3) 3	(3) 0.5	(3) BN	(3) 6799	(3) I	(3) —	(3) Camera Shield Ground	(3) 3	(3) 0.5	(3) BN	(3) 6799	(3) II	(3) —
4	—	—	—	—	—	Not Occupied	4	—	—	—	—	—
(5) 5	(5) 0.5	(5) VT / WH	(5) 239	(5) I	(5) —	(5) Run/ Crank Ignition 1 Voltage	(5) 5	(5) 0.5	(5) VT / WH	(5) 239	(5) II	(5) —
6	—	—	—	—	—	Not Occupied	6	—	—	—	—	—
(7) 7	(7) 0.75	(7) GN	(7) 654	(7) I	(7) —	(7) Cellular Telephone Microphone Low Reference	(7) 7	(7) 0.75	(7) GN	(7) 654	(7) II	(7) —
(8) 8	(8) 0.75	(8) GY	(8) 655	(8) I	(8) —	(8) Cellular Telephone Microphone Signal	(8) 8	(8) 0.75	(8) GY	(8) 655	(8) II	(8) —
(9) 9	(9) 0.5	(9) GN / WH	(9) 24	(9) I	(9) —	(9) Backup Lamp Control	(9) 9	(9) 0.5	(9) GN / WH	(9) 24	(9) II	(9) —
(10) 10	(10) 0.5	(10) BK	(10) 1850	(10) I	(10) —	(10) Ground	(10) 10	(10) 0.5	(10) BK	(10) 1850	(10) II	(10) —
(11) 11	(11) 0.5	(11) GY / WH	(11) 3153	(11) I	(11) —	(11) Lane Departure Warning Disable Switch Signal	(11) 11	(11) 0.5	(11) GY / WH	(11) 3153	(11) II	(11) —
(12) 12	(12) 0.5	(12) GN	(12) 5060	(12) I	(12) —	(12) Low Speed GMLAN Serial Data	(12) 12	(12) 0.5	(12) GN	(12) 5060	(12) II	(12) —
13	—	—	—	—	—	Not Occupied	13	—	—	—	—	—
(14) 14	(14) 0.5	(14) WH	(14) 3152	(14) I	(14) —	(14) Lane Departure Warning Indicator Control	(14) 14	(14) 0.5	(14) WH	(14) 3152	(14) II	(14) —
15	—	—	—	—	—	Not Occupied	15	—	—	—	—	—
(16) 16	(16) 0.5	(16) RD / GN	(16) 3140	(16) I	(16) —	(16) Battery Positive Voltage	(16) 16	(16) 0.5	(16) RD / GN	(16) 3140	(16) II	(16) —

X205 Roof Console Wiring Harness to Body Wiring Harness

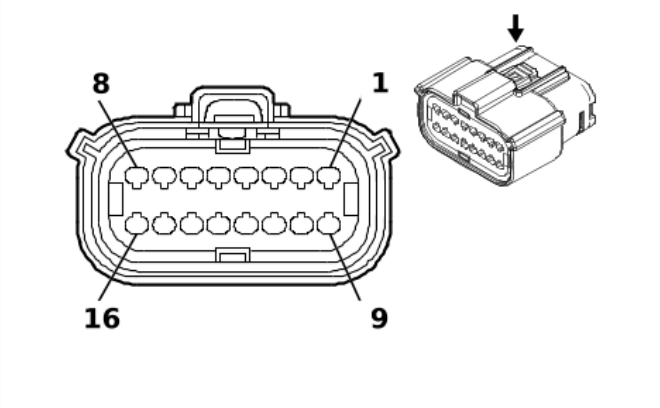

2548389

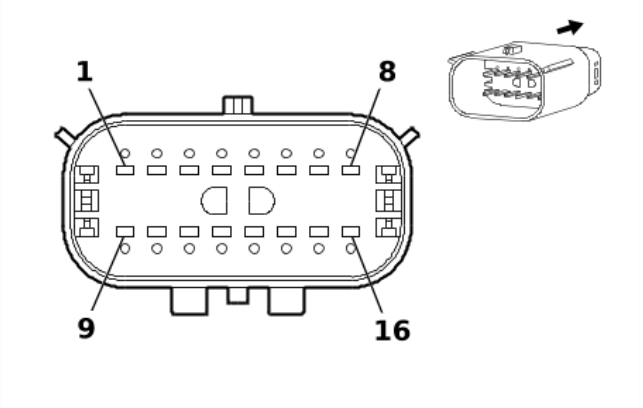

2548390

Connector Part Information
- Harness Type: Roof Console Wiring Harness
- OEM Connector: 33472-1606
- Service Connector: 13584788
- Description: 16-Way F 1.5 MX Series, Sealed(BK)

Connector Part Information
- Harness Type: Body Wiring Harness
- OEM Connector: 33482-8601
- Service Connector: 19369662
- Description: 16-Way M 1.5 MX Series, Sealed(BK)

Terminal Part Information

Terminal Type ID	Terminated Lead	Diagnostic Test Probe	Terminal Removal Tool
I	85528055	J-35616-2A (GY)	J-38125-217
II	86800300	J-35616-3 (GY)	J-38125-217

X205 Roof Console Wiring Harness to Body Wiring Harness

Pin	Size	Color	Circuit	Terminal Type ID	Option	Function	Pin	Size	Color	Circuit	Terminal Type ID	Option
(1) 1	(1) 0.35	(1) BN	(1) 441	(1) I	(1) —	(1) Run Ignition 3 Voltage	(1) 1	(1) 0.35	(1) BN	(1) 441	(1) II	(1) —
(2) 2	(2) 0.5	(2) OG	(2) 1925	(2) I	(2) —	(2) Auxiliary Blower Motor Medium Speed Control 2	(2) 2	(2) 0.35	(2) OG	(2) 1925	(2) II	(2) —
(3) 3	(3) 0.5	(3) PK / BK	(3) 5265	(3) I	(3) —	(3) Auxiliary HVAC Rear Control Signal	(3) 3	(3) 0.5	(3) PK / BK	(3) 5265	(3) II	(3) —
(4) 4	(4) 0.35	(4) GY	(4) 2599	(4) I	(4) —	(4) Rear Mode Door Actuator Signal	(4) 4	(4) 0.35	(4) GY	(4) 2599	(4) II	(4) —
(5) 5	(5) 0.5	(5) WH	(5) 1924	(5) I	(5) —	(5) Auxiliary Blower Motor High Speed Control	(5) 5	(5) 0.35	(5) WH	(5) 1924	(5) II	(5) —
(6) 6	(6) 0.35	(6) BN	(6) 341	(6) I	(6) —	(6) Run Ignition 3 Voltage	(6) 6	(6) 0.35	(6) BN	(6) 341	(6) II	(6) —
(7) 7	(7) 1	(7) BK	(7) 1850	(7) I	(7) —	(7) Ground	(7) 7	(7) 1	(7) BK	(7) 1850	(7) II	(7) —
(8) 8	(8) 0.5	(8) BU / WH	(8) 149	(8) I	(8) —	(8) Courtesy Lamp Control	(8) 8	(8) 0.5	(8) BU / WH	(8) 149	(8) II	(8) —

Pin	Size	Color	Circuit	Terminal Type ID	Option	Function	Pin	Size	Color	Circuit	Terminal Type ID	Option
(9) 9	(9) 0.5	(9) BK / WH	(9) 351	(9) I	(9) —	(9) Signal Ground	(9) 9	(9) 0.5	(9) BK / WH	(9) 351	(9) II	(9) —
(10) 10	(10) 0.5	(10) B N	(10) 52 63	(10) I	(10) —	(10) Auxiliary HVAC Rear Temperature Signal	(10) 10	(10) 0.5	(10) B N	(10) 52 63	(10) II	(10) —
(11) 11	(11) 0.35	(11) G N	(11) 61 34	(11) I	(11) —	(11) Body Control Module LIN Bus 3	(11) 11	(11) 0.35	(11) G N	(11) 61 34	(11) II	(11) —
(12) 12	(12) 0.35	(12) O G	(12) 27 75	(12) I	(12) —	(12) Rear Air Temperature Door Actuator Control	(12) 12	(12) 0.35	(12) O G	(12) 27 75	(12) II	(12) —
(13) 13	(13) 0.5	(13) P U / WH	(13) 52 64	(13) I	(13) —	(13) Auxiliary HVAC Rear Mode Signal	(13) 13	(13) 0.5	(13) P U / WH	(13) 52 64	(13) II	(13) —
(14) 14	(14) 0.5	(14) B U	(14) 19 26	(14) I	(14) —	(14) Auxiliary Blower Motor Low Speed Control 2	(14) 14	(14) 0.35	(14) B U	(14) 19 26	(14) II	(14) —
(15) 15	(15) 0.35	(15) B N / WH	(15) 23 0	(15) I	(15) —	(15) Instrument Panel Lamp Dimming Control	(15) 15	(15) 0.35	(15) B N / WH	(15) 23 0	(15) II	(15) —
(16) 16	(16) 0.75	(16) O G	(16) 17 32	(16) I	(16) —	(16) Control Module 12V Reference 3	(16) 16	(16) 0.75	(16) O G	(16) 17 32	(16) II	(16) —

X206 Instrument Panel Wiring Harness to Instrument Panel Wiring Harness

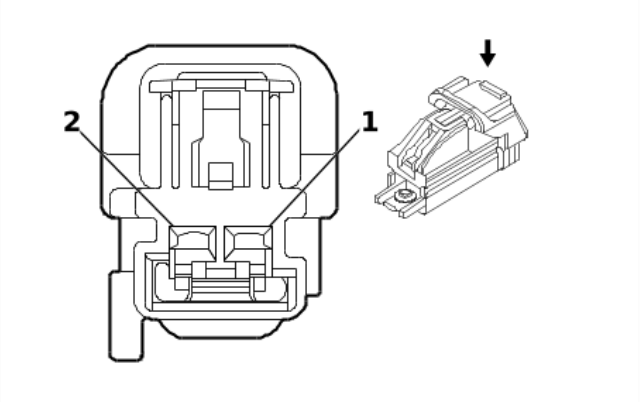

1856792

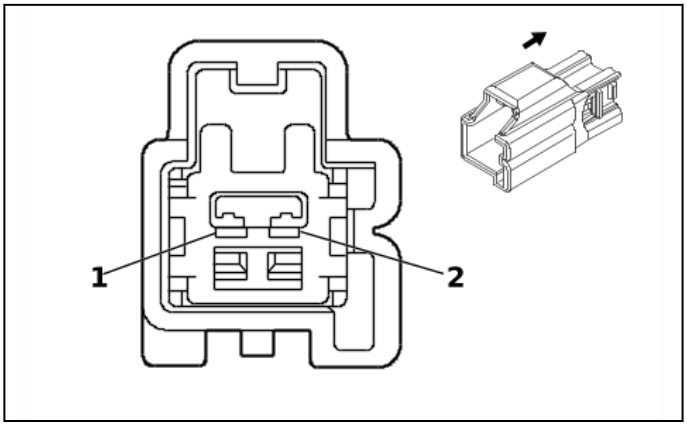

1853532

Connector Part Information
- Harness Type: Instrument Panel Wiring Harness
- OEM Connector: 7283-6443-40
- Service Connector: 19367525
- Description: 2-Way F 1.5 YESC Series(L-GY)

Connector Part Information
- Harness Type: Instrument Panel Wiring Harness
- OEM Connector: 7282-6443-40
- Service Connector: 19367526
- Description: 2-Way M 1.5 Series(L-GY)

Terminal Part Information

Terminal Type ID	Terminated Lead	Diagnostic Test Probe	Terminal Removal Tool
I	Not required	J-35616-2A (GY)	No Tool Required
II	Not required	J-35616-3 (GY)	No Tool Required

X206 Instrument Panel Wiring Harness to Instrument Panel Wiring Harness

Pin	Size	Color	Circuit	Terminal Type ID	Option	Function	Pin	Size	Color	Circuit	Terminal Type ID	Option
(1) 1	(1) 0.5	(1) BU	(1) 20	(1) I	(1) —	(1) Stop Lamp Control	(1) 1	(1) 0.5	(1) BU	(1) 20	(1) II	(1) —
(2) 2	(2) 0.5	(2) BK	(2) 350	(2) I	(2) —	(2) Ground	(2) 2	(2) 0.5	(2) BK	(2) 350	(2) II	(2) —

X220 Instrument Panel Wiring Harness to Park Brake Switch Jumper Wiring Harness

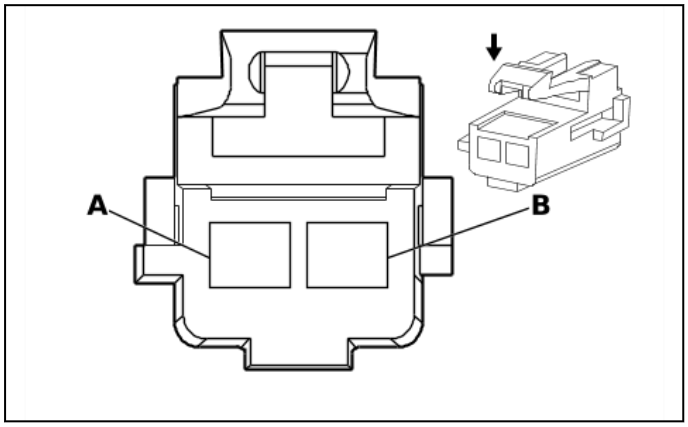

1542255

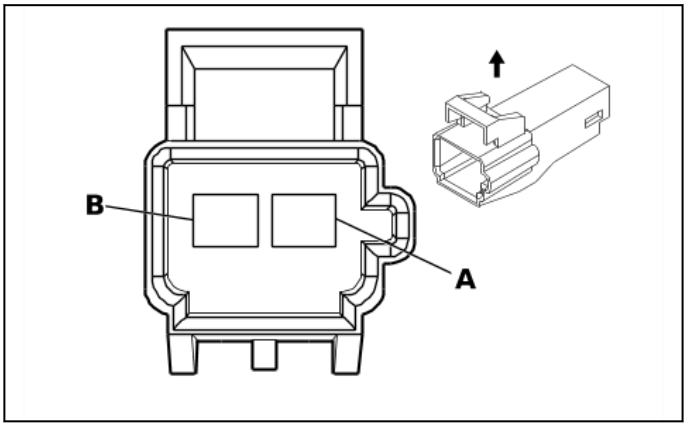

788072

Connector Part Information
- Harness Type: Instrument Panel Wiring Harness
- OEM Connector: 12129082
- Service Connector: 15305896
- Description: 2-Way F 280 Metri-Pack Flexlock Series(GY)

Connector Part Information
- Harness Type: Park Brake Switch Jumper Wiring Harness
- OEM Connector: Not Available
- Service Connector: Service by Harness - See Part Catalog
- Description: 2-Way M (GY)

Terminal Part Information

Terminal Type ID	Terminated Lead	Diagnostic Test Probe	Terminal Removal Tool
I	Not required	J-35616-4A (PU)	No Tool Required
II	Not required	No Tool Required	No Tool Required

X220 Instrument Panel Wiring Harness to Park Brake Switch Jumper Wiring Harness

Pin	Size	Color	Circuit	Terminal Type ID	Option	Function	Pin	Size	Color	Circuit	Terminal Type ID	Option
A	0.75	BU	1134	I	—	Park Brake Switch Signal	A	0.75	BU	1134	II	—
B	—	—	—	—	—	Not Occupied	B	—	—	—	—	—

X221 Instrument Panel Wiring Harness to Antenna Wiring Harness

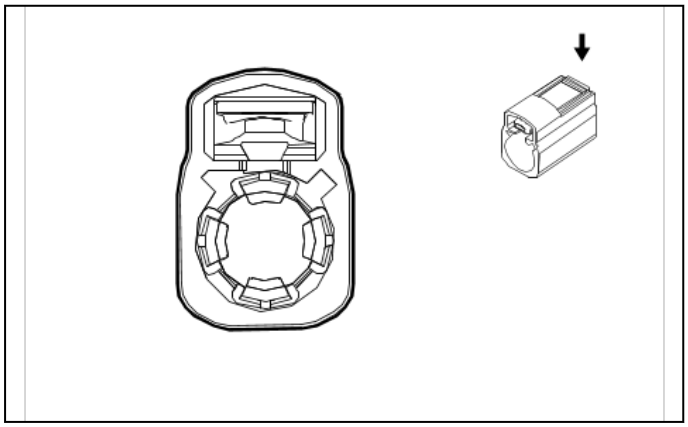

2908476

Connector Part Information
- Harness Type: Instrument Panel Wiring Harness COAX
- OEM Connector: 13616870
- Service Connector: Service by Cable Assembly — See Part Catalog
- Description: 1-Way F Coax Type(BK)

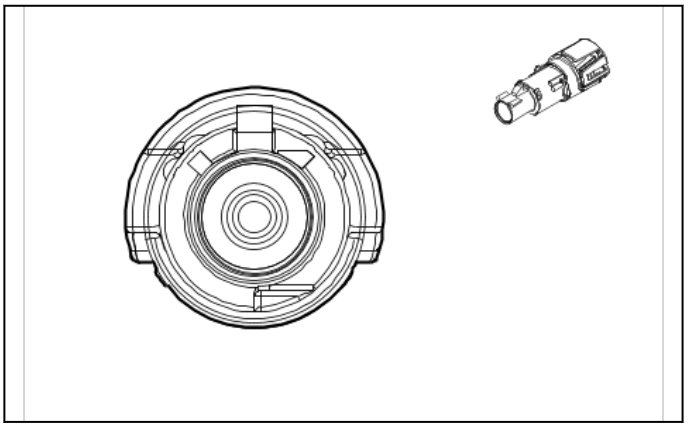

5518522

Connector Part Information
- Harness Type: Antenna Wiring Harness COAX
- OEM Connector: Not Available
- Service Connector: Service by Cable Assembly — See Part Catalog
- Description: 1-Way M (BK)

Terminal Part Information

Terminal Type ID	Terminated Lead	Diagnostic Test Probe	Terminal Removal Tool
I	Not required	No Tool Required	No Tool Required

X221 Instrument Panel Wiring Harness to Antenna Wiring Harness

Pin	Size	Color	Circuit	Terminal Type ID	Option	Function	Pin	Size	Color	Circuit	Terminal Type ID	Option
—	—	Coax Cable	—	I	—	(AM/FM) Antenna RF Signal	—	—	Coax Cable	—	I	—

X225 Accelerator Control Wiring Harness to Instrument Panel Wiring Harness

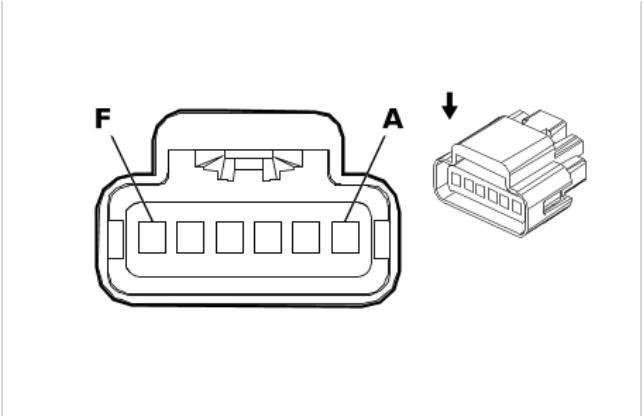

2526641

Connector Part Information
- Harness Type: Accelerator Control Wiring Harness
- OEM Connector: 13667186
- Service Connector: Service by Harness - See Part Catalog
- Description: 6-Way F 150 GT FBT Series(BK)

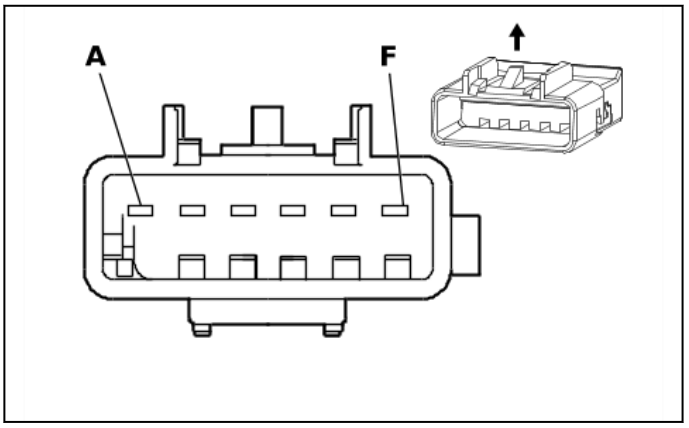

1464340

Connector Part Information
- Harness Type: Instrument Panel Wiring Harness
- OEM Connector: 15332142
- Service Connector: 19368863
- Description: 6-Way M 150 GT Series(BK)

Terminal Part Information

Terminal Type ID	Terminated Lead	Diagnostic Test Probe	Terminal Removal Tool
I	Not required	J-35616-2A (GY)	No Tool Required
II	Not required	J-35616-3 (GY)	No Tool Required

X225 Accelerator Control Wiring Harness to Instrument Panel Wiring Harness

Pin	Size	Color	Circuit	Terminal Type ID	Option	Function	Pin	Size	Color	Circuit	Terminal Type ID	Option
A	0.35	BN / RD	1274	I	—	Accelerator Pedal Position 5V Reference 2	A	0.35	BN / RD	1274	II	—
B	0.35	WH / RD	1164	I	—	Accelerator Pedal Position 5V Reference 1	B	0.35	WH / RD	1164	II	—
C	0.35	YE / WH	1161	I	—	Accelerator Pedal Position Signal 1	C	0.35	YE / WH	1161	II	—
D	0.35	BK / BU	1271	I	—	Accelerator Pedal Position Low Reference 1	D	0.35	BK / BU	1271	II	—
E	0.35	BK / VT	1272	I	—	Accelerator Pedal Position Low Reference 2	E	0.35	BK / VT	1272	II	—
F	0.35	GN / WH	1162	I	—	Accelerator Pedal Position Signal 2	F	0.35	GN / WH	1162	II	—

X291 Accessory Power Fuse Block Rear Wiring Harness Extension Harness to Accessory Power Fuse Block Rear Wiring Harness Extension Harness (9L7)

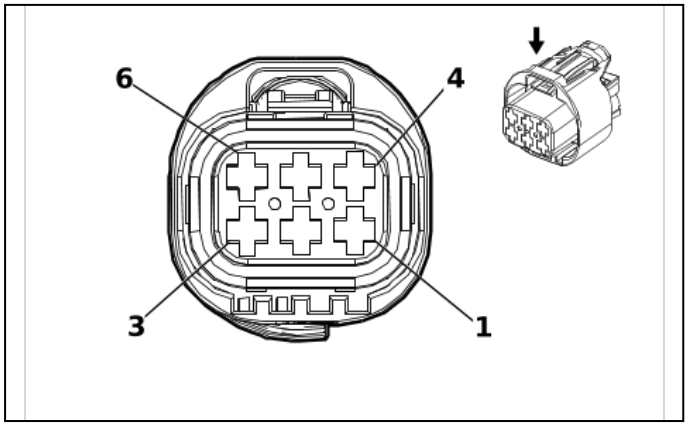

2042938

Connector Part Information

- Harness Type: Accessory Power Fuse Block Rear Wiring Harness Extension Harness
- OEM Connector: 1452327-1
- Service Connector: Service by Harness - See Part Catalog
- Description: 6-Way F 2.8 Junior Power Timer Series, Sealed(BK)

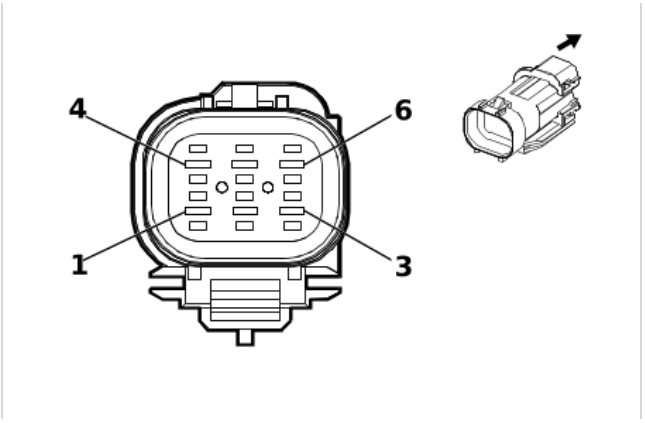

2042939

Connector Part Information

- Harness Type: Accessory Power Fuse Block Rear Wiring Harness Extension Harness
- OEM Connector: 1452324-1
- Service Connector: Service by Harness - See Part Catalog
- Description: 6-Way M 2.8 Series, Sealed(BK)

Terminal Part Information

Terminal Type ID	Terminated Lead	Diagnostic Test Probe	Terminal Removal Tool
I	Not required	J-35616-4A (PU)	No Tool Required
II	Not required	J-35616-5 (PU)	No Tool Required

X291 Accessory Power Fuse Block Rear Wiring Harness Extension Harness to Accessory Power Fuse Block Rear Wiring Harness Extension Harness (9L7)

Pin	Size	Color	Circuit	Terminal Type ID	Option	Function	Pin	Size	Color	Circuit	Terminal Type ID	Option
(1) 1	(1) 2.5	(1) GN	(1) 6840	(1) I	(1) —	(1) Auxiliary Device 2 Switched Voltage	(1) 1	(1) 2.5	(1) GN	(1) 6840	(1) II	(1) —
(2) 2	(2) 2.5	(2) GN	(2) 6839	(2) I	(2) —	(2) Auxiliary Device 1 Switched Voltage	(2) 2	(2) 2.5	(2) GN	(2) 6839	(2) II	(2) —
(3) 3	(3) 0.5	(3) BU	(3) 6843	(3) I	(3) —	(3) Auxiliary Device Relay 2 Control	(3) 3	(3) 0.5	(3) BU	(3) 6843	(3) II	(3) —
(4) 4	(4) 0.5	(4) BK / BU	(4) 6842	(4) I	(4) —	(4) Auxiliary Device Relay 1 Control	(4) 4	(4) 0.5	(4) BK / BU	(4) 6842	(4) II	(4) —
(5) 5	(5) 1	(5) RD / WH	(5) 5440	(5) I	(5) —	(5) Battery Positive Voltage	(5) 5	(5) 1	(5) RD / WH	(5) 5440	(5) II	(5) —
6	—	—	—	—	—	Not Occupied	6	—	—	—	—	—

X306 Body Wiring Harness to Seat Wiring Harness - Passenger

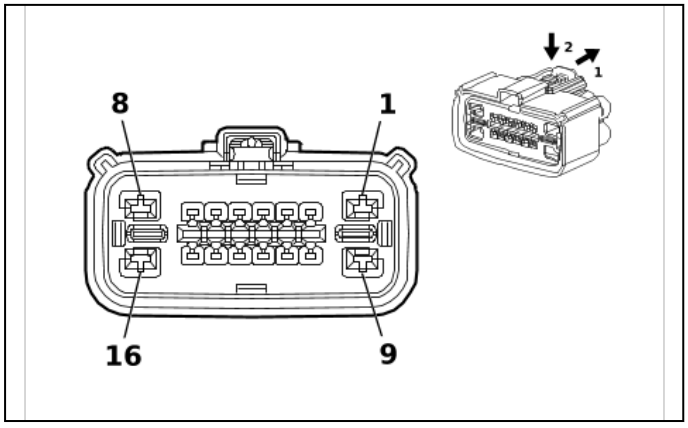

4283035

Connector Part Information

- Harness Type: Body Wiring Harness
- OEM Connector: 34985-2161
- Service Connector: 19368738
- Description: 16-Way F 1.5, 2.8 MX Series, Sealed(YE)

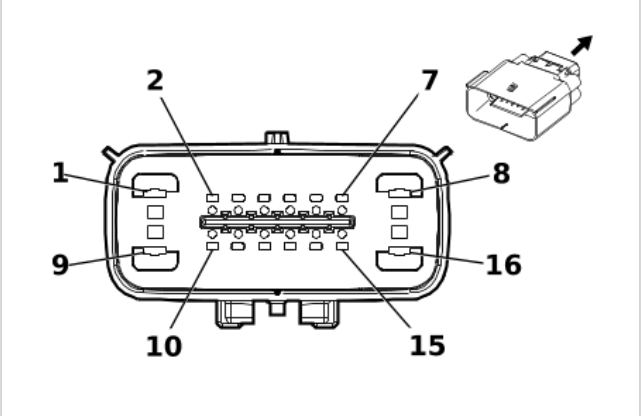

2373686

Connector Part Information

- Harness Type: Seat Wiring Harness - Passenger
- OEM Connector: Not Available
- Service Connector: Service by Harness - See Part Catalog
- Description: 16-Way M (YE)

Terminal Part Information

Terminal Type ID	Terminated Lead	Diagnostic Test Probe	Terminal Removal Tool
I	13576377	J-35616-35 (VT)	J-38125-12A
II	85528055	J-35616-2A (GY)	J-38125-217
III	Not required	No Tool Required	No Tool Required
IV	Not required	No Tool Required	No Tool Required

X306 Body Wiring Harness to Seat Wiring Harness - Passenger

Pin	Size	Color	Circuit	Terminal Type ID	Option	Function	Pin	Size	Color	Circuit	Terminal Type ID	Option
(1) 1	(1) 3	(1) BK	(1) 1850	(1) I	(1) —	(1) Ground	(1) 1	(1) 3	(1) BK	(1) 1850	(1) IV	(1) —
(2) 2	(2) 0.5	(2) OG	(2) 1362	(2) III	(2) —	(2) Passenger Seat Belt Switch Signal	(2) 2	(2) 0.5	(2) OG	(2) 1362	(2) IV	(2) —
(3) 3	(3) 0.5	(3) PK	(3) 1361	(3) III	(3) —	(3) Passenger Seat Belt Switch Low Reference	(3) 3	(3) 0.5	(3) PK	(3) 1361	(3) IV	(3) —
(4) 4	(4) 0.5	(4) OG / BN	(4) 7571	(4) III	(4) —	(4) Passenger Seat Belt Reminder Signal	(4) 4	(4) 0.5	(4) OG / BN	(4) 7571	(4) IV	(4) —
(5) 5	(5) 0.5	(5) GN	(5) 2116	(5) II	(5) —	(5) Passenger Seat Belt Pretensioner High Control	(5) 5	(5) 0.5	(5) GN	(5) 2116	(5) IV	(5) —
(6) 6	(6) 0.5	(6) OG	(6) 2117	(6) II	(6) —	(6) Passenger Seat Belt Pretensioner Low Control	(6) 6	(6) 0.5	(6) OG	(6) 2117	(6) IV	(6) —
7 - 8	—	—	—	—	—	Not Occupied	7 - 8	—	—	—	—	—
(9) 9	(9) 3	(9) RD / WH	(9) 3540	(9) I	(9) —	(9) Battery Positive Voltage	(9) 9	(9) 3	(9) RD / WH	(9) 3540	(9) IV	(9) —
(10) 10	(10) 0.5	(10) GN	(10) 2136	(10) II	(10) —	(10) Right Front Seat Side Air Bag Low Control	(10) 10	(10) 0.5	(10) GN	(10) 2136	(10) IV	(10) —
(11) 11	(11) 0.5	(11) TN / WH	(11) 2135	(11) II	(11) —	(11) Right Front Seat Side Air Bag High Control	(11) 11	(11) 0.5	(11) TN / WH	(11) 2135	(11) IV	(11) —
12 - 16	—	—	—	—	—	Not Occupied	12 - 16	—	—	—	—	—

X307 Body Wiring Harness to Seat Wiring Harness - Driver

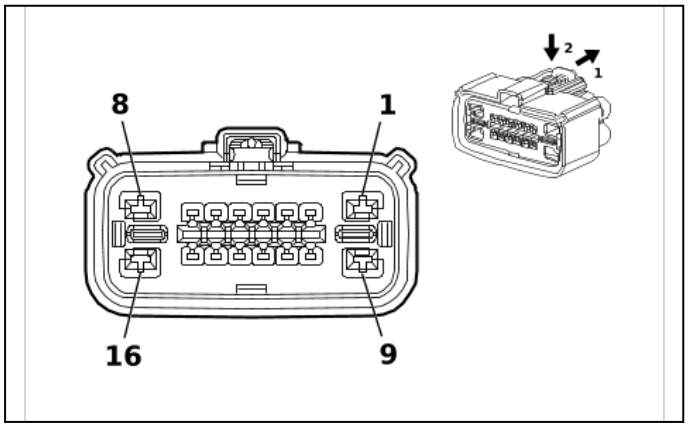

4283035

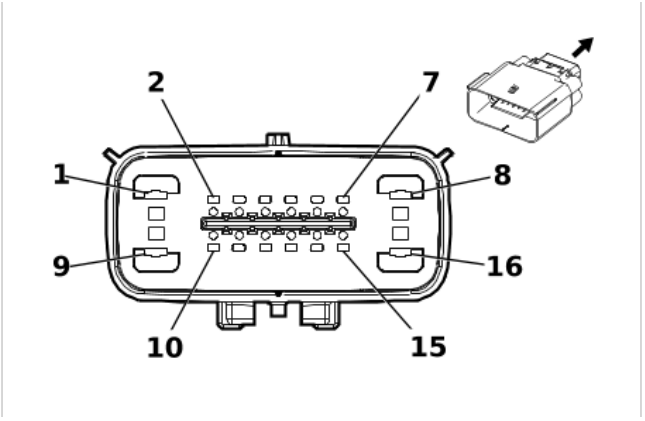

2373686

Connector Part Information
- Harness Type: Body Wiring Harness
- OEM Connector: 34985-2161
- Service Connector: 19368738
- Description: 16-Way F 1.5, 2.8 MX Series, Sealed(YE)

Connector Part Information
- Harness Type: Seat Wiring Harness - Driver
- OEM Connector: Not Available
- Service Connector: Service by Harness - See Part Catalog
- Description: 16-Way M (YE)

Terminal Part Information

Terminal Type ID	Terminated Lead	Diagnostic Test Probe	Terminal Removal Tool
I	13576377	J-35616-35 (VT)	J-38125-12A
II	85528055	J-35616-2A (GY)	J-38125-217
III	Not required	No Tool Required	No Tool Required

X307 Body Wiring Harness to Seat Wiring Harness - Driver

Pin	Size	Color	Circuit	Terminal Type ID	Option	Function	Pin	Size	Color	Circuit	Terminal Type ID	Option
(1) 1	(1) 3	(1) RD / WH	(1) 3540	(1) I	(1) —	(1) Battery Positive Voltage	(1) 1	(1) 3	(1) RD / WH	(1) 3540	(1) III	(1) —
(2) 2	(2) 0.5	(2) PK	(2) 5057	(2) II	(2) —	(2) Seat Position Switch Low Reference	(2) 2	(2) 0.5	(2) PK	(2) 5057	(2) III	(2) —
(3) 3	(3) 0.5	(3) TN / WH	(3) 238	(3) II	(3) —	(3) Driver Seat Belt Switch Signal	(3) 3	(3) 0.5	(3) TN / WH	(3) 238	(3) III	(3) —
4	—	—	—	—	—	Not Occupied	4	—	—	—	—	—
(5) 5	(5) 0.5	(5) TN / WH	(5) 2118	(5) II	(5) —	(5) Driver Seat Belt Pretensioner High Control	(5) 5	(5) 0.5	(5) TN / WH	(5) 2118	(5) III	(5) —
(6) 6	(6) 0.5	(6) O G / BK	(6) 2119	(6) II	(6) —	(6) Driver Seat Belt Pretensioner Low Control	(6) 6	(6) 0.5	(6) O G / BK	(6) 2119	(6) III	(6) —
7 - 8	—	—	—	—	—	Not Occupied	7 - 8	—	—	—	—	—
(9) 9	(9) 3	(9) BK	(9) 450	(9) I	(9) —	(9) Ground	(9) 9	(9) 3	(9) BK	(9) 450	(9) III	(9) —

Pin	Size	Color	Circuit	Terminal Type ID	Option	Function	Pin	Size	Color	Circuit	Terminal Type ID	Option
(10) 10	(10) 0.5	(10) Y E / BK	(10) 21 38	(10) II	(10) —	(10) Left Front Seat Side Air Bag Low Control	(10) 10	(10) 0.5	(10) Y E / BK	(10) 21 38	(10) III	(10) —
(11) 11	(11) 0.5	(11) B N	(11) 21 37	(11) II	(11) —	(11) Left Front Seat Side Air Bag High Control	(11) 11	(11) 0.5	(11) B N	(11) 21 37	(11) III	(11) —
12 - 16	—	—	—	—	—	Not Occupied	12 - 16	—	—	—	—	—

X318 Instrument Panel Wiring Harness to Body Wiring Harness

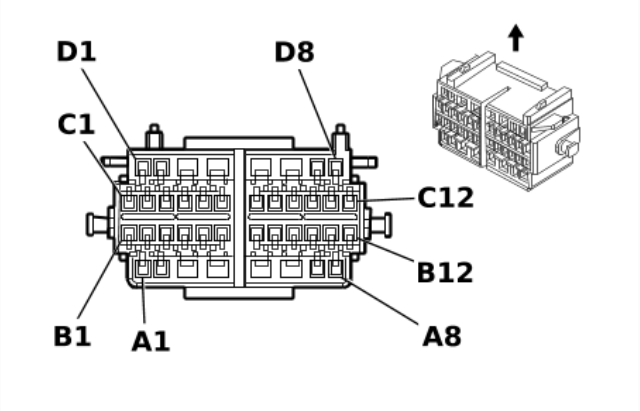

1538795

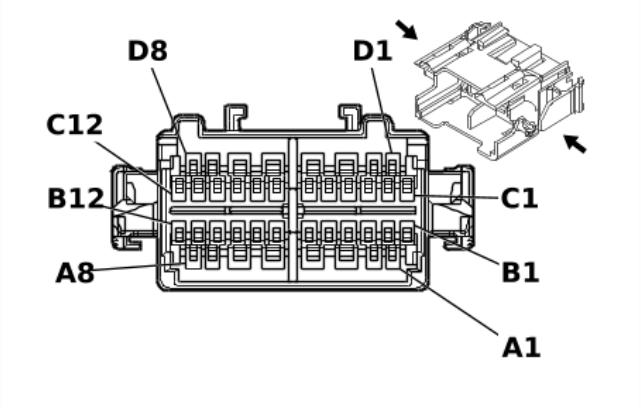

851471

Connector Part Information
- Harness Type: Instrument Panel Wiring Harness
- OEM Connector: 15448130
- Service Connector: 89046970
- Description: 40-Way F 150, 280 GT Series(L-GY)

Connector Part Information
- Harness Type: Body Wiring Harness
- OEM Connector: 15416977
- Service Connector: 19331377
- Description: 40-Way M 150, 280 GT Series(L-GY)

Terminal Part Information

Terminal Type ID	Terminated Lead	Diagnostic Test Probe	Terminal Removal Tool
I	13575503	J-35616-4A (PU)	J-38125-215A
II	13575735	J-35616-14 (GN)	J-38125-215A
III	13575753	J-35616-4A (PU)	J-38125-215A
IV	19300627	J-35616-14 (GN)	J-38125-215A
V	13575500	J-35616-3 (GY)	J-38125-215A
VI	13575502	J-35616-3 (GY)	J-38125-215A
VII	13575505	J-35616-5 (PU)	J-38125-215A
VIII	13575507	J-35616-5 (PU)	J-38125-215A

X318 Instrument Panel Wiring Harness to Body Wiring Harness

Pin	Size	Color	Circuit	Terminal Type ID	Option	Function	Pin	Size	Color	Circuit	Terminal Type ID	Option
A1	0.75	OG	1853	II	—	Right Front Midrange Speaker [+] Control	A1	0.75	OG	1853	VI	—
A2	0.75	GN	1953	II	—	Right Front Midrange Speaker [-] Control	A2	0.75	GN	1953	VI	—
A3	0.5	BK / WH	1751	I	—	Signal Ground	A3	0.5	BK / WH	1751	VII	—
A4	0.5	TN / BK	371	I	—	Passenger Supplemental Inflatable Restraint Disable Switch Signal	A4	0.5	TN / BK	371	VII	—
A5	0.5	BU / YE	6105	I	—	High Speed GMLAN Serial Data [+] 2	A5	0.5	BU / YE	6105	VII	—
A6	0.5	WH	6106	I	—	High Speed GMLAN Serial Data [-] 2	A6	0.5	WH	6106	VII	—
A7	—	—	—	—	—	Not Occupied	A7	—	—	—	—	—
A8	0.35	YE / BK	1181	IV	—	Right Rear Door Open Switch Signal	A8	0.35	YE / BK	1181	V	—
B1	0.75	BU	1320	II	—	Center High Mounted Stop Lamp Control 2	B1	0.75	BU	1320	VI	—
B2	—	—	—	—	—	Not Occupied	B2	—	—	—	—	—
B3	0.75	TN	1855	II	—	Right Rear Midrange Speaker [+] Control	B3	1	TN	1855	VI	—
B4	0.75	OG	1955	II	—	Right Rear Midrange Speaker [-] Control	B4	1	OG	1955	VI	—
B5	—	—	—	—	—	Not Occupied	B5	—	—	—	—	—
B6	0.5	GN	5060	IV	—	Low Speed GMLAN Serial Data	B6	0.5	GN	5060	V	—
B7	0.5	BU / WH	6619	IV	—	Front Middle Impact Dis-criminating Sensor Low Reference	B7	0.5	BU / WH	6619	V	—
B8	0.5	BN / WH	6618	IV	—	Front Middle Impact Dis-criminating Sensor Signal	B8	0.5	BN / WH	6618	V	—

Pin	Size	Color	Circuit	Terminal Type ID	Option	Function	Pin	Size	Color	Circuit	Terminal Type ID	Option
B9	0.35	WH	3152	IV	—	Lane Departure Warning Indicator Control	B9	0.5	WH	3152	V	—
B10	0.35	GN	5060	IV	—	Low Speed GMLAN Serial Data	B10	0.35	GN	5060	V	—
B11	0.35	GN	6134	IV	—	Body Control Module LIN Bus 3	B11	0.35	GN	6134	V	—
B12	0.35	GY / WH	3153	IV	—	Lane Departure Warning Disable Switch Signal	B12	0.5	GY / WH	3153	V	—
C1	0.75	GN	654	II	—	Cellular Telephone Microphone Low Reference	C1	0.75	GN	654	VI	—
C2	0.35	PK	1139	IV	—	Run/Crank Ignition 1 Voltage	C2	0.35	PK	1139	V	—
C3	0.75	TN	1859	II	—	Left Rear Midrange Speaker [+] Control	C3	1	TN	1859	VI	—
C4	0.75	WH	1959	II	—	Left Rear Midrange Speaker [-] Control	C4	1	WH	1959	VI	—
C5	0.75	GY	655	II	—	Cellular Telephone Microphone Signal	C5	0.75	GY	655	VI	—
C6	—	—	—	—	—	Not Occupied	C6	—	—	—	—	—
C7	0.35	GN	5926	IV	—	Rear Body Opening Open Switch Signal	C7	0.35	GN	5926	V	—
C8	0.35	PK / BK	1303	IV	—	Liftgate Ajar Switch Signal 1	C8	0.35	PK / BK	1303	V	—
C9	0.35	TN / WH	746	IV	—	Right Front Door Ajar Switch Signal	C9	0.35	TN / WH	746	V	—
C10	0.35	GN	1177	IV	—	Right Front Door Open Switch Signal	C10	0.35	GN	1177	V	—
C11	0.5	TN	126	IV	—	Left Front Door Open Switch Signal	C11	0.35	TN	126	V	—
C12	0.35	GY / BK	745	IV	—	Left Front Door Ajar Switch Signal	C12	0.35	GY / BK	745	V	—
D1	0.75	BU	1857	II	—	Left Front Midrange Speaker [+] Control	D1	0.75	BU	1857	VI	—

Pin	Size	Color	Circuit	Terminal Type ID	Option	Function	Pin	Size	Color	Circuit	Terminal Type ID	Option
D2	0.75	BU	1957	II	—	Left Front Midrange Speaker [-] Control	D2	0.75	BU	1957	VI	—
D3	0.5	OG	1732	III	—	Control Module 12V Reference 3	D3	0.75	OG	1732	VIII	—
D4	0.5	PK	353	I	—	Passenger Supplemental Inflatable Restraint Suppression Indicator Control	D4	0.5	PK	353	VII	—
D5	0.5	PK / BK	780	I	—	Driver Door Lock Switch Lock Signal	D5	0.35	PK / BK	780	VII	—
D6	0.5	OG / BK	781	I	—	Driver Door Lock Switch Unlock Signal	D6	0.35	OG / BK	781	VII	—
D7	0.35	BU	244	IV	—	Passenger Door Lock Switch Lock Control	D7	0.35	BU	244	V	—
D8	0.35	BU	245	IV	—	Passenger Door Lock Switch Unlock Control	D8	0.35	BU	245	V	—

X319 Auxiliary Heater Front Wiring Harness to Body Wiring Harness

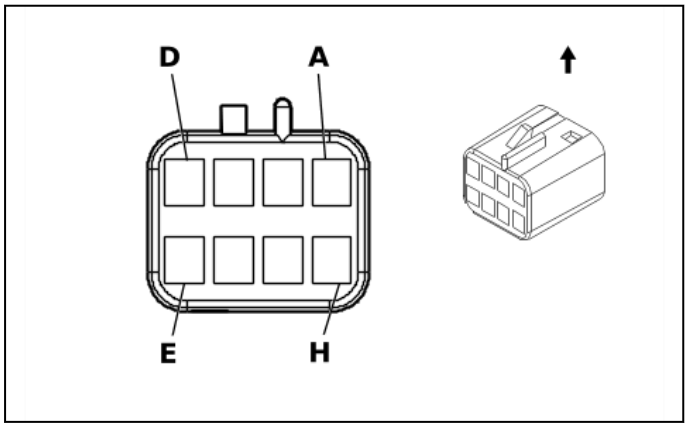

62439

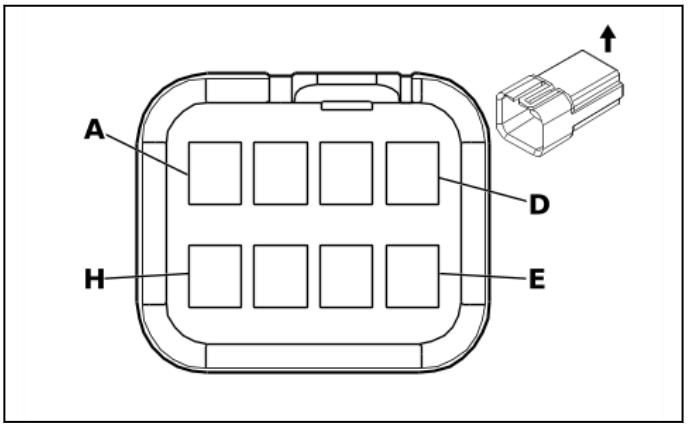

62434

Connector Part Information
- Harness Type: Auxiliary Heater Front Wiring Harness
- OEM Connector: 12047886
- Service Connector: Service by Harness - See Part Catalog
- Description: 8-Way F 150 Metri-Pack Series(BK)

Connector Part Information
- Harness Type: Body Wiring Harness
- OEM Connector: 12045688
- Service Connector: 13584253
- Description: 8-Way M 150 Metri-Pack Series(BK)

Terminal Part Information

Terminal Type ID	Terminated Lead	Diagnostic Test Probe	Terminal Removal Tool
I	Not required	J-35616-14 (GN)	No Tool Required
II	Not required	J-35616-3 (GY)	No Tool Required

X319 Auxiliary Heater Front Wiring Harness to Body Wiring Harness

Pin	Size	Color	Circuit	Terminal Type ID	Option	Function	Pin	Size	Color	Circuit	Terminal Type ID	Option
A	0.35	WH	1924	I	—	Auxiliary Blower Motor High Speed Control	A	0.35	WH	1924	II	—
B	0.35	OG	1925	I	—	Auxiliary Blower Motor Medium Speed Control 2	B	0.35	OG	1925	II	—
C	0.35	BU	1926	I	—	Auxiliary Blower Motor Low Speed Control 2	C	0.35	BU	1926	II	—
D	0.35	BN / WH	230	I	—	Instrument Panel Lamp Dimming Control	D	0.35	BN / WH	230	II	—
E	0.35	BK	450	I	—	Ground	E	0.35	BK	450	II	—
F - H	—	—	—	—	—	Not Occupied	F - H	—	—	—	—	—

X323 Airbag Wiring Harness to Body Wiring Harness

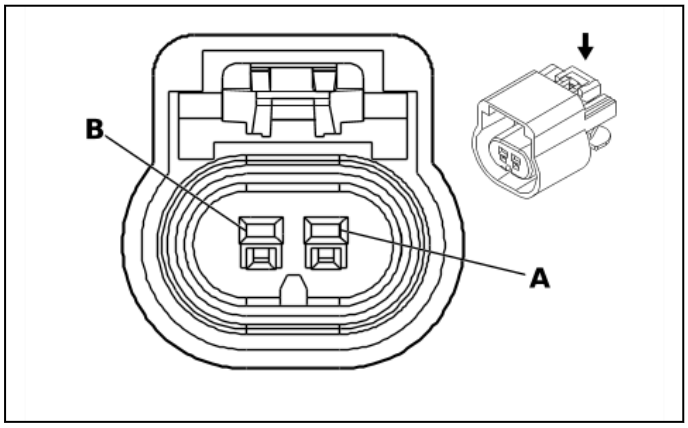

523630

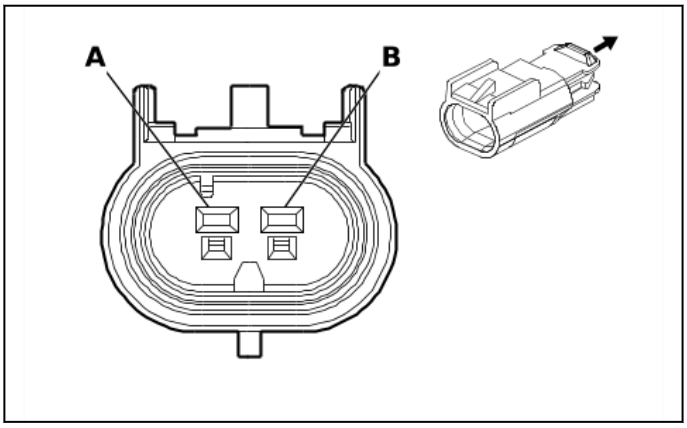

681875

Connector Part Information
- Harness Type: Airbag Wiring Harness
- OEM Connector: 13510085
- Service Connector: Service by Harness - See Part Catalog
- Description: 2-Way F 150 GT Series, Sealed(BK)

Connector Part Information
- Harness Type: Body Wiring Harness
- OEM Connector: 13510099
- Service Connector: 13580103
- Description: 2-Way M 150 GT Series, Sealed(BK)

Terminal Part Information

Terminal Type ID	Terminated Lead	Diagnostic Test Probe	Terminal Removal Tool
I	Not required	J-35616-2A (GY)	No Tool Required
II	Not required	J-35616-3 (GY)	No Tool Required

X323 Airbag Wiring Harness to Body Wiring Harness

Pin	Size	Color	Circuit	Terminal Type ID	Option	Function	Pin	Size	Color	Circuit	Terminal Type ID	Option
A	0.5	GY / BK	6621	I	—	Left Middle Side Impact Sensor Low Reference	A	0.5	GY / BK	6621	II	—
B	0.5	GN / WH	6620	I	—	Left Middle Side Impact Sensor Signal	B	0.5	GN / WH	6620	II	—

X324 Airbag Wiring Harness to Body Wiring Harness

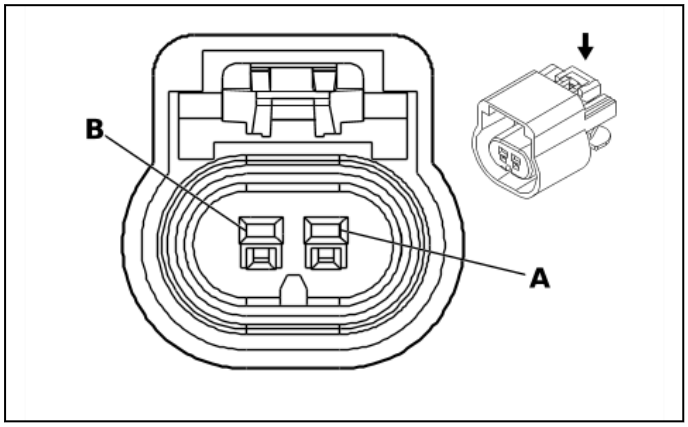

523630

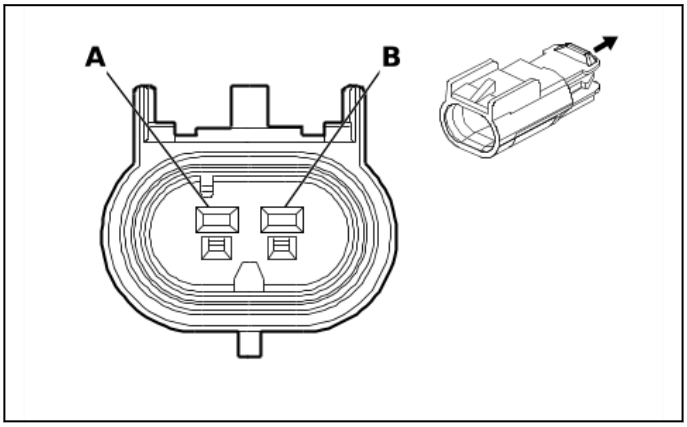

681875

Connector Part Information
- Harness Type: Airbag Wiring Harness
- OEM Connector: 13510085
- Service Connector: Service by Harness - See Part Catalog
- Description: 2-Way F 150 GT Series, Sealed(BK)

Connector Part Information
- Harness Type: Body Wiring Harness
- OEM Connector: 13510099
- Service Connector: 13580103
- Description: 2-Way M 150 GT Series, Sealed(BK)

Terminal Part Information

Terminal Type ID	Terminated Lead	Diagnostic Test Probe	Terminal Removal Tool
I	Not required	J-35616-2A (GY)	No Tool Required
II	Not required	J-35616-3 (GY)	No Tool Required

X324 Airbag Wiring Harness to Body Wiring Harness

Pin	Size	Color	Circuit	Terminal Type ID	Option	Function	Pin	Size	Color	Circuit	Terminal Type ID	Option
A	0.5	GN / WH	6625	I	—	Right Middle Side Impact Sensor Low Reference	A	0.5	GN / WH	6625	II	—
B	0.5	BU / BK	6624	I	—	Right Middle Side Impact Sensor Signal	B	0.5	BU / BK	6624	II	—

X329 Instrument Panel Wiring Harness to Body Wiring Harness

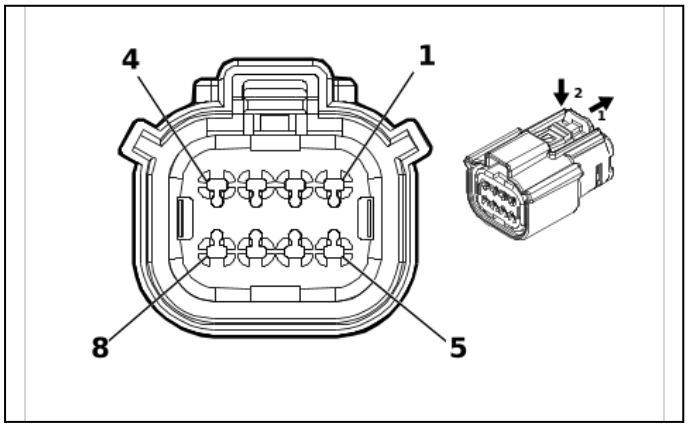

4846407

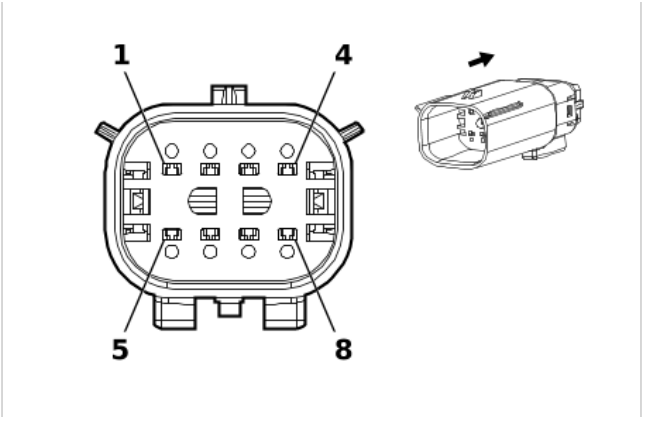

2667653

Connector Part Information
- Harness Type: Instrument Panel Wiring Harness
- OEM Connector: 33472-4806
- Service Connector: 84928314
- Description: 8-Way F 1.5 MX Series, Sealed(BK)

Connector Part Information
- Harness Type: Body Wiring Harness
- OEM Connector: 33482-4801
- Service Connector: 19370460
- Description: 8-Way M 1.5 MX Series, Sealed(BK)

Terminal Part Information

Terminal Type ID	Terminated Lead	Diagnostic Test Probe	Terminal Removal Tool
I	Not required	J-35616-2A (GY)	No Tool Required
II	Not required	No Tool Required	No Tool Required
III	Not required	J-35616-3 (GY)	No Tool Required
IV	Not required	No Tool Required	No Tool Required

X329 Instrument Panel Wiring Harness to Body Wiring Harness

Pin	Size	Color	Circuit	Terminal Type ID	Option	Function	Pin	Size	Color	Circuit	Terminal Type ID	Option
1 - 3	—	—	—	—	—	Not Occupied	1 - 3	—	—	—	—	—
(4) 4	(4) 0.5	(4) GN	(4) 24	(4) I	(4) —	(4) Backup Lamp Control	(4) 4	(4) 0.5	(4) GN	(4) 24	(4) III	(4) —
5 - 6	—	—	—	—	—	Not Occupied	5 - 6	—	—	—	—	—
(7) 7	(7) 0.5	(7) GN	(7) 24	(7) I	(7) —	(7) Backup Lamp Control	(7) 7	(7) 0.5	(7) GN / WH	(7) 24	(7) III	(7) —
(8) 8	(8) 0.5	(8) PK	(8) 239	(8) I	(8) —	(8) Run/ Crank Ignition 1 Voltage	(8) 8	(8) 0.5	(8) VT / WH	(8) 239	(8) III	(8) —
E	—	VT / WH	239	II	—	Run/Crank Ignition 1 Voltage	E	—	PK	239	IV	—

X330 Instrument Panel Wiring Harness to Body Wiring Harness

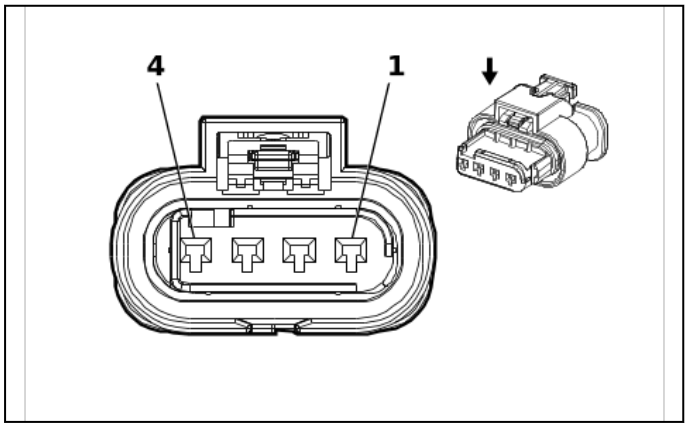

2684560

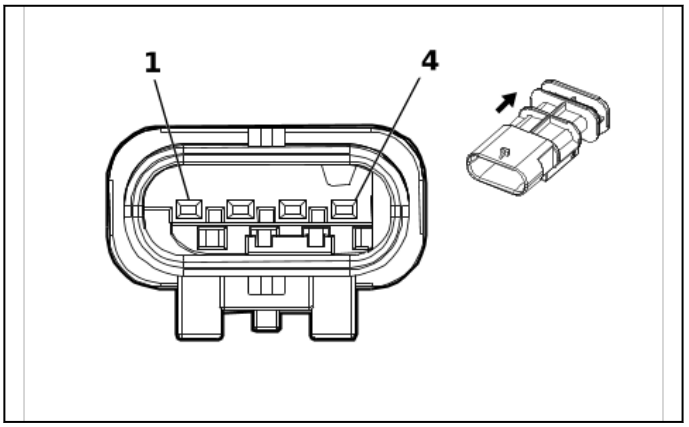

3225223

Connector Part Information
- Harness Type: Instrument Panel Wiring Harness
- OEM Connector: 1-2141402-4
- Service Connector: 13586137
- Description: 4-Way F 1.2 Series, Sealed(YE)

Connector Part Information
- Harness Type: Body Wiring Harness
- OEM Connector: 1-1564559-4
- Service Connector: 19299698
- Description: 4-Way M 1.2 Series, Sealed(YE)

Terminal Part Information

Terminal Type ID	Terminated Lead	Diagnostic Test Probe	Terminal Removal Tool
I	Not required	J-35616-12 (BU)	No Tool Required
II	Not required	J-35616-17 (L-GN)	No Tool Required

X330 Instrument Panel Wiring Harness to Body Wiring Harness

Pin	Size	Color	Circuit	Terminal Type ID	Option	Function	Pin	Size	Color	Circuit	Terminal Type ID	Option
(1) 1	(1) 0.5	(1) TN	(1) 3021	(1) I	(1) —	(1) Steering Wheel Air Bag Stage 1 High Control	(1) 1	(1) 0.5	(1) TN	(1) 3021	(1) II	(1) —
(2) 2	(2) 0.5	(2) BN	(2) 3020	(2) I	(2) —	(2) Steering Wheel Air Bag Stage 1 Low Control	(2) 2	(2) 0.5	(2) BN	(2) 3020	(2) II	(2) —
3 - 4	—	—	—	—	—	Not Occupied	3 - 4	—	—	—	—	—

X331 Instrument Panel Wiring Harness to Body Wiring Harness

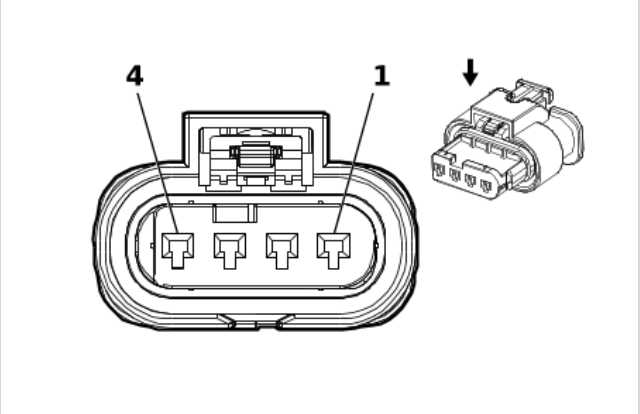

2684564

Connector Part Information
- Harness Type: Instrument Panel Wiring Harness
- OEM Connector: 2-2141402-4
- Service Connector: 85571685
- Description: 4-Way F 1.2 Series, Sealed(YE)

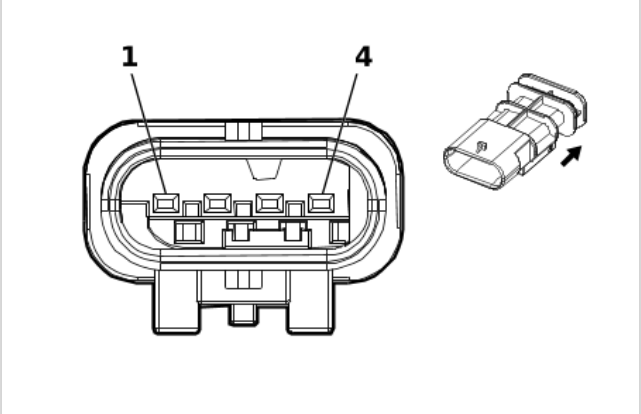

2684563

Connector Part Information
- Harness Type: Body Wiring Harness
- OEM Connector: 2-1564559-4
- Service Connector: 13586576
- Description: 4-Way M 1.2 Series, Sealed(YE)

Terminal Part Information

Terminal Type ID	Terminated Lead	Diagnostic Test Probe	Terminal Removal Tool
I	Not required	J-35616-12 (BU)	No Tool Required
II	Not required	J-35616-17 (L-GN)	No Tool Required

X331 Instrument Panel Wiring Harness to Body Wiring Harness

Pin	Size	Color	Circuit	Terminal Type ID	Option	Function	Pin	Size	Color	Circuit	Terminal Type ID	Option
(1) 1	(1) 0.5	(1) YE	(1) 3025	(1) I	(1) —	(1) Passenger Instrument Panel Air Bag Stage 1 High Control	(1) 1	(1) 0.5	(1) YE	(1) 3025	(1) II	(1) —
(2) 2	(2) 0.5	(2) OG	(2) 3024	(2) I	(2) —	(2) Passenger Instrument Panel Air Bag Stage 1 Low Control	(2) 2	(2) 0.5	(2) OG	(2) 3024	(2) II	(2) —
3 - 4	—	—	—	—	—	Not Occupied	3 - 4	—	—	—	—	—

X400 Rear Door Door Wiring Harness to Body Wiring Harness

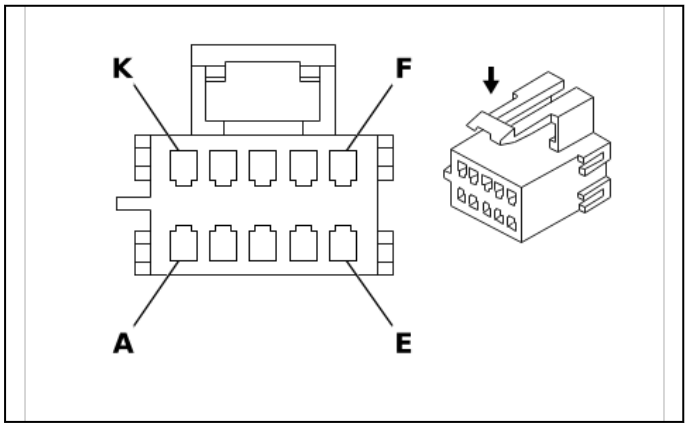

603055

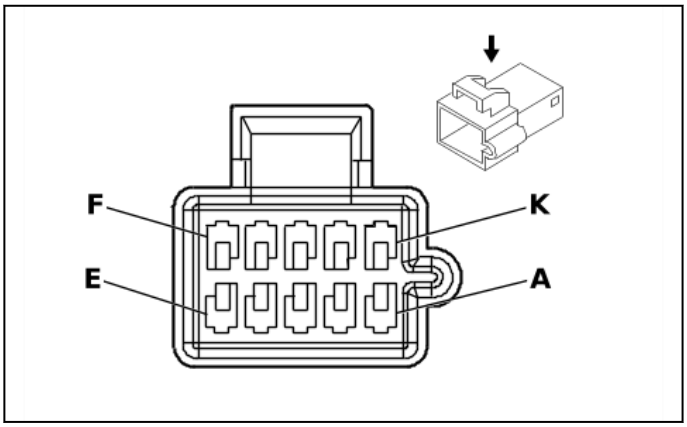

808703

Connector Part Information
- Harness Type: Rear Door Door Wiring Harness
- OEM Connector: 15324054
- Service Connector: Service by Harness - See Part Catalog
- Description: 10-Way F 150 Metri-Pack Series(BK)

Connector Part Information
- Harness Type: Body Wiring Harness
- OEM Connector: 15324758
- Service Connector: 19179279
- Description: 10-Way M 150 Metri-Pack Series(BK)

Terminal Part Information

Terminal Type ID	Terminated Lead	Diagnostic Test Probe	Terminal Removal Tool
I	Not required	J-35616-14 (GN)	No Tool Required
II	13505668	J-35616-3 (GY)	J-38125-12A
III	13575463	J-35616-3 (GY)	J-38125-12A

X400 Rear Door Door Wiring Harness to Body Wiring Harness

Pin	Size	Color	Circuit	Terminal Type ID	Option	Function	Pin	Size	Color	Circuit	Terminal Type ID	Option
A	1	TN	1855	I	—	Right Rear Midrange Speaker [+] Control	A	1	TN	1855	II	—
B	1	OG	1955	I	—	Right Rear Midrange Speaker [-] Control	B	1	OG	1955	II	—
C	—	—	—	—	—	Not Occupied	C	—	—	—	—	—
D	0.35	BK / WH	1051	I	—	Signal Ground	D	1	BK / WH	1051	II	—
E	0.35	BU	245	I	—	Passenger Door Lock Switch Unlock Control	E	0.35	BU	245	III	—
F	1	GY	295	I	—	Door Lock Actuator Lock Control	F	1	GY	295	II	—
G	1	TN / BK	1095	I	—	Right Rear Door Lock Actuator Unlock Control	G	1	TN / BK	1095	II	—

Pin	Size	Color	Circuit	Terminal Type ID	Option	Function	Pin	Size	Color	Circuit	Terminal Type ID	Option
H	0.35	GN	5926	I	—	Rear Body Opening Open Switch Signal	H	0.35	GN	5926	III	—
J	0.35	PK / BK	1303	I	—	Liftgate Ajar Switch Signal 1	J	0.35	PK / BK	1303	III	—
K	0.35	BU	244	I	—	Passenger Door Lock Switch Lock Control	K	0.35	BU	244	III	—

X403 Rear Door Door Wiring Harness to Body Wiring Harness - Cargo

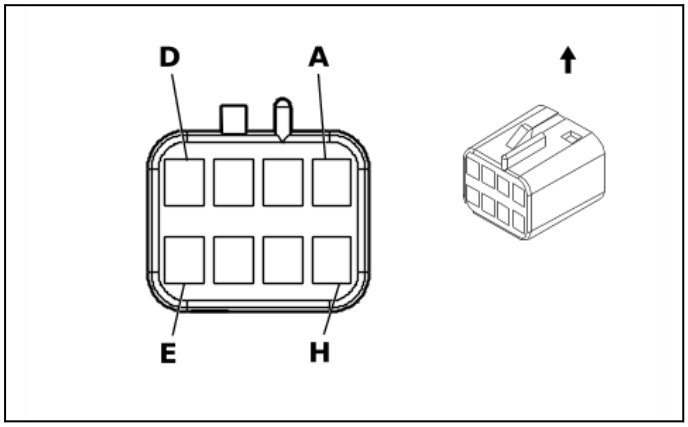

62439

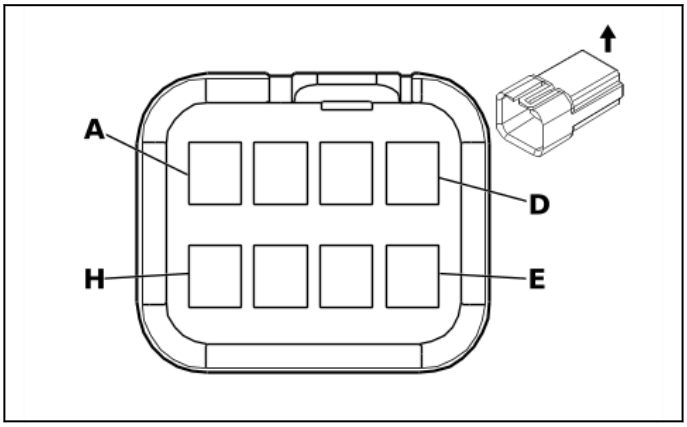

62434

Connector Part Information
- Harness Type: Rear Door Door Wiring Harness
- OEM Connector: Not Available
- Service Connector: Service by Harness - See Part Catalog
- Description: 8-Way F

Connector Part Information
- Harness Type: Body Wiring Harness
- OEM Connector: 12089526
- Service Connector: 13584253
- Description: 8-Way M 150 Metri-Pack Series(BK)

Terminal Part Information

Terminal Type ID	Terminated Lead	Diagnostic Test Probe	Terminal Removal Tool
I	Not required	No Tool Required	No Tool Required
II	Not required	J-35616-3 (GY)	No Tool Required

X403 Rear Door Door Wiring Harness to Body Wiring Harness - Cargo

Pin	Size	Color	Circuit	Terminal Type ID	Option	Function	Pin	Size	Color	Circuit	Terminal Type ID	Option
A	0.5	BU / YE	7641	I	—	Frontview Camera 2 Signal [+]	A	0.5	BU / YE	7641	II	—
B	0.5	WH / YE	7642	I	—	Frontview Camera 2 Signal [-]	B	0.5	WH / YE	7642	II	—
C	—	—	—	—	—	Not Occupied	C	—	—	—	—	—
D	0.5	BK / WH	351	I	—	Signal Ground	D	0.5	BK / WH	351	II	—

Pin	Size	Color	Circuit	Terminal Type ID	Option	Function	Pin	Size	Color	Circuit	Terminal Type ID	Option
E	0.5	PK	239	I	—	Run/Crank Ignition 1 Voltage	E	0.5	VT / WH	239	II	—
F	0.5	GN	24	I	—	Backup Lamp Control	F	0.5	GN / WH	24	II	—
G	—	—	—	—	—	Not Occupied	G	—	—	—	—	—
H	0.5	BN	6799	I	—	Camera Shield Ground	H	0.5	BARE	6799	II	—

X403 Rear Door Door Wiring Harness to Body Wiring Harness - Passenger

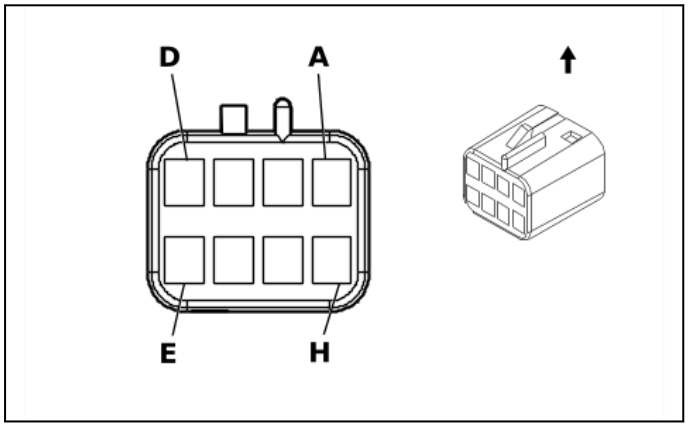

62439

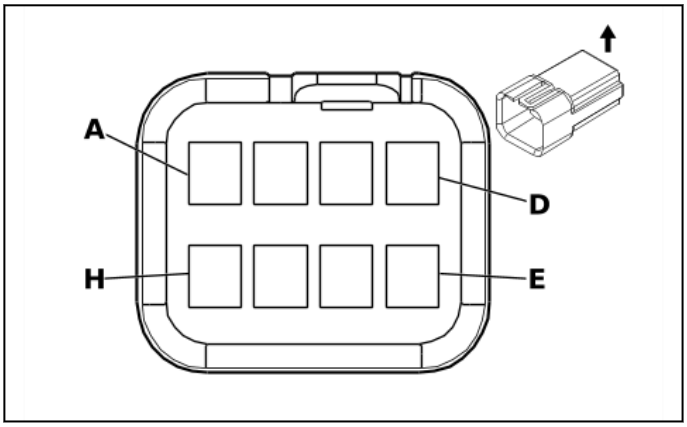

62434

Connector Part Information
- Harness Type: Rear Door Door Wiring Harness
- OEM Connector: Not Available
- Service Connector: Service by Harness - See Part Catalog
- Description: 8-Way F

Connector Part Information
- Harness Type: Body Wiring Harness
- OEM Connector: 12045688
- Service Connector: 13584253
- Description: 8-Way M 150 Metri-Pack Series(BK)

Terminal Part Information

Terminal Type ID	Terminated Lead	Diagnostic Test Probe	Terminal Removal Tool
I	Not required	No Tool Required	No Tool Required
II	Not required	J-35616-3 (GY)	No Tool Required

X403 Rear Door Door Wiring Harness to Body Wiring Harness - Passenger

Pin	Size	Color	Circuit	Terminal Type ID	Option	Function	Pin	Size	Color	Circuit	Terminal Type ID	Option
A	0.5	BU / YE	7641	I	—	Frontview Camera 2 Signal [+]	A	0.5	BU / YE	7641	II	—
B	0.5	WH / YE	7642	I	—	Frontview Camera 2 Signal [-]	B	0.5	WH / YE	7642	II	—
C	—	—	—	—	—	Not Occupied	C	—	—	—	—	—
D	0.5	BK / WH	351	I	—	Signal Ground	D	0.5	BK / WH	351	II	—

Pin	Size	Color	Circuit	Terminal Type ID	Option	Function	Pin	Size	Color	Circuit	Terminal Type ID	Option
E	0.5	VT / WH	239	I	—	Run/Crank Ignition 1 Voltage	E	0.5	VT / WH	239	II	—
F	0.5	GN / WH	24	I	—	Backup Lamp Control	F	0.5	GN / WH	24	II	—
G	—	—	—	—	—	Not Occupied	G	—	—	—	—	—
H	0.5	BN	6799	I	—	Camera Shield Ground	H	0.5	BARE	6799	II	—

X403 Rearview Camera Wiring Harness to Body Wiring Harness - Cutaway

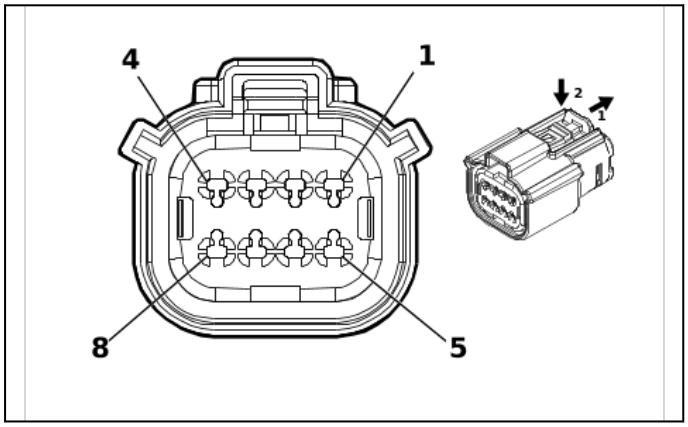

4846407

Connector Part Information
- Harness Type: Rearview Camera Wiring Harness
- OEM Connector: 33472-4806
- Service Connector: Service by Harness - See Part Catalog
- Description: 8-Way F 1.5 MX Series, Sealed(BK)

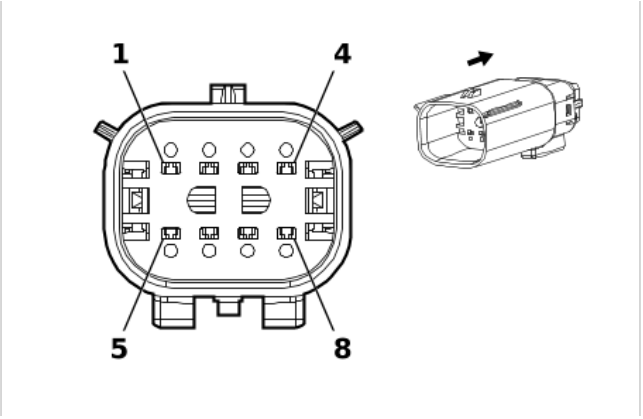

2667653

Connector Part Information
- Harness Type: Body Wiring Harness
- OEM Connector: 33482-4801
- Service Connector: 19370460
- Description: 8-Way M 1.5 MX Series, Sealed(BK)

Terminal Part Information

Terminal Type ID	Terminated Lead	Diagnostic Test Probe	Terminal Removal Tool
I	Not required	J-35616-2A (GY)	No Tool Required
II	Not required	J-35616-3 (GY)	No Tool Required

X403 Rearview Camera Wiring Harness to Body Wiring Harness - Cutaway

Pin	Size	Color	Circuit	Terminal Type ID	Option	Function	Pin	Size	Color	Circuit	Terminal Type ID	Option
(1) 1	(1) 0.5	(1) BU / YE	(1) 7641	(1) I	(1) —	(1) Frontview Camera 2 Signal [+]	(1) 1	(1) 0.5	(1) BU / YE	(1) 7641	(1) II	(1) —
(2) 2	(2) 0.5	(2) WH / YE	(2) 7642	(2) I	(2) —	(2) Frontview Camera 2 Signal [-]	(2) 2	(2) 0.5	(2) WH / YE	(2) 7642	(2) II	(2) —
3 - 4	—	—	—	—	—	Not Occupied	3 - 4	—	—	—	—	—
(5) 5	(5) 0.5	(5) BN	(5) 6799	(5) I	(5) —	(5) Camera Shield Ground	(5) 5	(5) 0.5	(5) BN	(5) 6799	(5) II	(5) —

Pin	Size	Color	Circuit	Terminal Type ID	Option	Function	Pin	Size	Color	Circuit	Terminal Type ID	Option
(6) 6	(6) 0.5	(6) BK / WH	(6) 351	(6) I	(6) —	(6) Signal Ground	(6) 6	(6) 0.5	(6) BK / WH	(6) 351	(6) II	(6) —
(7) 7	(7) 0.5	(7) GN / WH	(7) 24	(7) I	(7) —	(7) Backup Lamp Control	(7) 7	(7) 0.5	(7) GN	(7) 24	(7) II	(7) —
(8) 8	(8) 0.5	(8) VT / WH	(8) 239	(8) I	(8) —	(8) Run/ Crank Ignition 1 Voltage	(8) 8	(8) 0.5	(8) VT / WH	(8) 239	(8) II	(8) —

X403 Rear Door Door Wiring Harness to Body Wiring Harness - (- Cutaway)

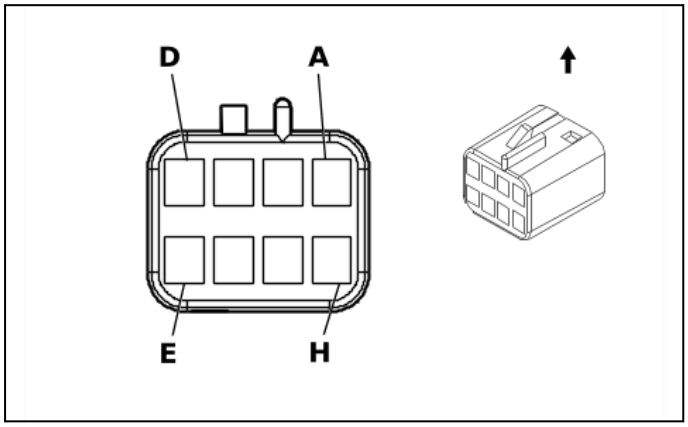

62439

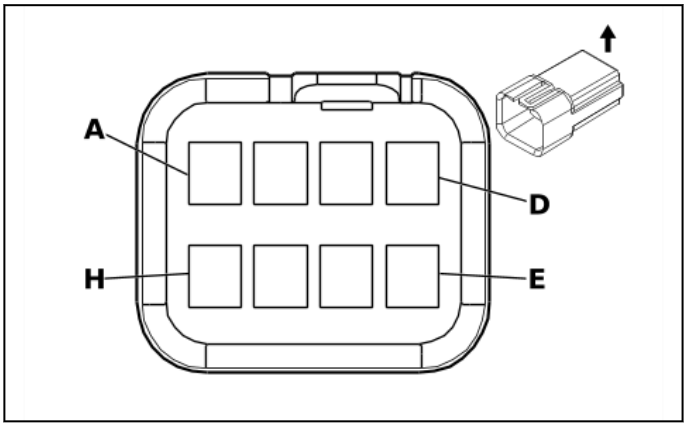

62434

Connector Part Information
- Harness Type: Rear Door Door Wiring Harness
- OEM Connector: 12047886
- Service Connector: Service by Harness - See Part Catalog
- Description: 8-Way F 150 Metri-Pack Series(BK)

Connector Part Information
- Harness Type: Body Wiring Harness
- OEM Connector: 12089526
- Service Connector: 13584253
- Description: 8-Way M 150 Metri-Pack Series(BK)

Terminal Part Information

Terminal Type ID	Terminated Lead	Diagnostic Test Probe	Terminal Removal Tool
I	Not required	J-35616-14 (GN)	No Tool Required
II	Not required	J-35616-3 (GY)	No Tool Required

X403 Rear Door Door Wiring Harness to Body Wiring Harness - (- Cutaway)

Pin	Size	Color	Circuit	Terminal Type ID	Option	Function	Pin	Size	Color	Circuit	Terminal Type ID	Option
A	0.5	BU / YE	7641	I	—	Frontview Camera 2 Signal [+]	A	0.5	BU / YE	7641	II	—
B	0.5	WH / YE	7642	I	—	Frontview Camera 2 Signal [-]	B	0.5	WH / YE	7642	II	—
C	—	—	—	—	—	Not Occupied	C	—	—	—	—	—
D	0.5	BK / WH	351	I	—	Signal Ground	D	0.5	BK / WH	351	II	—
E	0.5	VT / WH	239	I	—	Run/Crank Ignition 1 Voltage	E	0.5	VT / WH	239	II	—

Pin	Size	Color	Circuit	Terminal Type ID	Option	Function	Pin	Size	Color	Circuit	Terminal Type ID	Option
F	0.5	GN / WH	24	I	—	Backup Lamp Control	F	0.5	GN / WH	24	II	—
G	—	—	—	—	—	Not Occupied	G	—	—	—	—	—
H	0.5	BARE	6799	I	—	Camera Shield Ground	H	0.5	BN	6799	II	—

X405 Chassis Wiring Harness to Chassis Wiring Harness - Cutaway

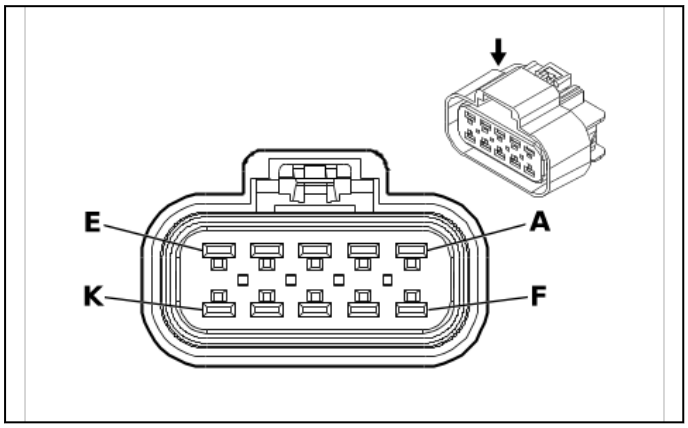

655815

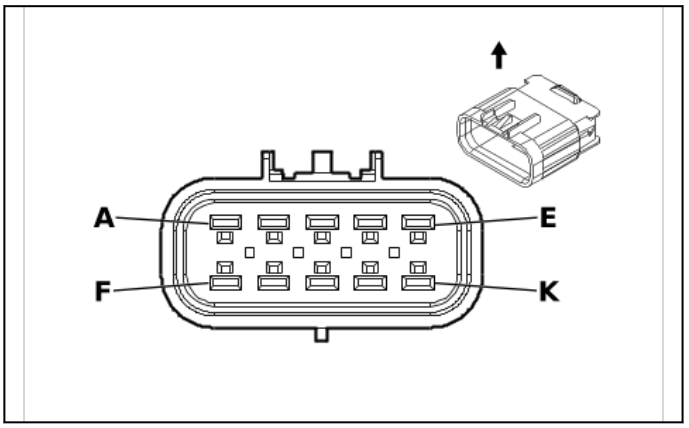

655819

Connector Part Information
- Harness Type: Chassis Rear Wiring Harness Extension Harness
- OEM Connector: 15326660
- Service Connector: Service by Harness - See Part Catalog
- Description: 10-Way F 280 GT Series, Sealed(BK)

Connector Part Information
- Harness Type: Chassis Rear Wiring Harness Extension Harness
- OEM Connector: 15326661
- Service Connector: Service by Harness - See Part Catalog
- Description: 10-Way M 280 GT Series, Sealed(BK)

Terminal Part Information

Terminal Type ID	Terminated Lead	Diagnostic Test Probe	Terminal Removal Tool
I	Not required	J-35616-4A (PU)	No Tool Required
II	Not required	J-35616-5 (PU)	No Tool Required

X405 Chassis Wiring Harness to Chassis Wiring Harness - Cutaway

Pin	Size	Color	Circuit	Terminal Type ID	Option	Function	Pin	Size	Color	Circuit	Terminal Type ID	Option
A - B	—	—	—	—	—	Not Occupied	A - B	—	—	—	—	—
C	1	BU	1320	I	—	Center High Mounted Stop Lamp Control 2	C	1	BU	1320	II	—
D	1	YE	618	I	—	Left Rear Turn Signal Lamp Control	D	1	YE	618	II	—
E	1	GN	619	I	—	Right Rear Turn Signal Lamp Control	E	1	GN	619	II	—
F	1	BN	2109	I	—	Trailer Park Lamp Control	F	1	BN	2109	II	—

Pin	Size	Color	Circuit	Terminal Type ID	Option	Function	Pin	Size	Color	Circuit	Terminal Type ID	Option
G	1	BK	150	I	—	Ground	G	1	BK	150	II	—
H	1	GN	1624	I	—	Trailer Backup Lamp Control	H	1	GN	1624	II	—
J	—	—	—	—	—	Not Occupied	J	—	—	—	—	—
K	0.75	BU / WH	149	I	—	Courtesy Lamp Control	K	0.75	BU / WH	149	II	—

X405 Chassis Wiring Harness to Chassis Wiring Harness (UY7)

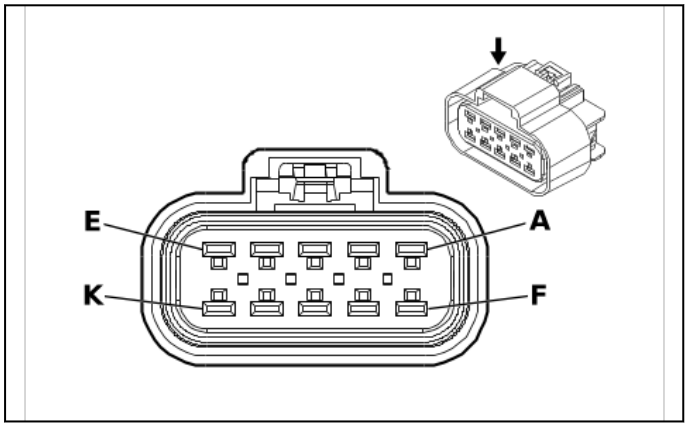

655815

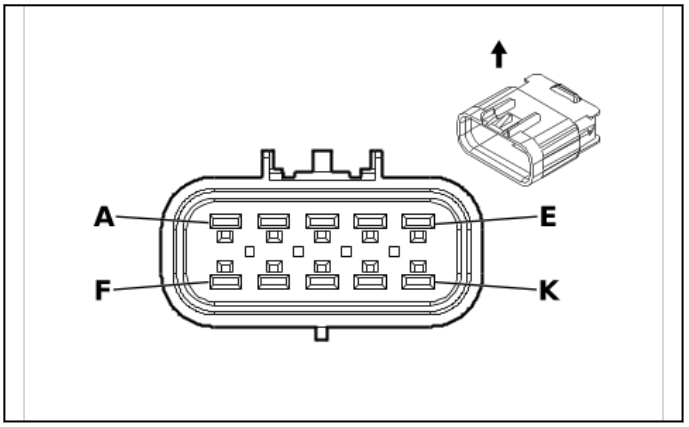

655819

Connector Part Information
- Harness Type: Chassis Wiring Harness
- OEM Connector: 15326660
- Service Connector: 88986262
- Description: 10-Way F 280 GT Series, Sealed(BK)

Connector Part Information
- Harness Type: Chassis Wiring Harness
- OEM Connector: 15326661
- Service Connector: 88986245
- Description: 10-Way M 280 GT Series, Sealed(BK)

Terminal Part Information

Terminal Type ID	Terminated Lead	Diagnostic Test Probe	Terminal Removal Tool
I	Not required	J-35616-4A (PU)	No Tool Required
II	13580826	J-35616-5 (PU)	J-38125-215A
III	Not required	J-35616-5 (PU)	No Tool Required

X405 Chassis Wiring Harness to Chassis Wiring Harness (UY7)

Pin	Size	Color	Circuit	Terminal Type ID	Option	Function	Pin	Size	Color	Circuit	Terminal Type ID	Option
A - B	—	—	—	—	—	Not Occupied	A - B	—	—	—	—	—
C	0.75	BU	1320	I	—	Center High Mounted Stop Lamp Control 2	C	0.75	BU	1320	II	—
D	—	—	—	—	—	Left Rear Turn Signal Lamp Control	D	1	YE	618	II	—
E	—	—	—	—	—	Right Rear Turn Signal Lamp Control	E	1	GN	619	II	—

Pin	Size	Color	Circuit	Terminal Type ID	Option	Function	Pin	Size	Color	Circuit	Terminal Type ID	Option
F	—	—	—	—	—	Trailer Park Lamp Control	F	1	BN	2109	II	—
G	1	BK	150	I	—	Ground	G	1	BK	150	II	—
H - K	—	—	—	—	—	Not Occupied	H - K	—	—	—	—	—

X407 Auxiliary Heater and Air Conditioning Wiring Harness to Body Wiring Harness

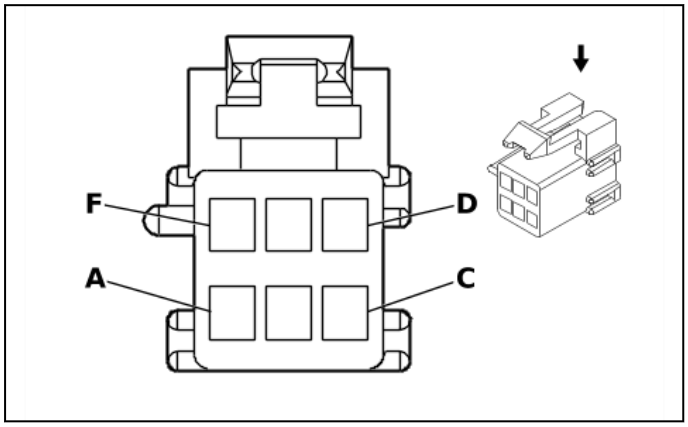

40422

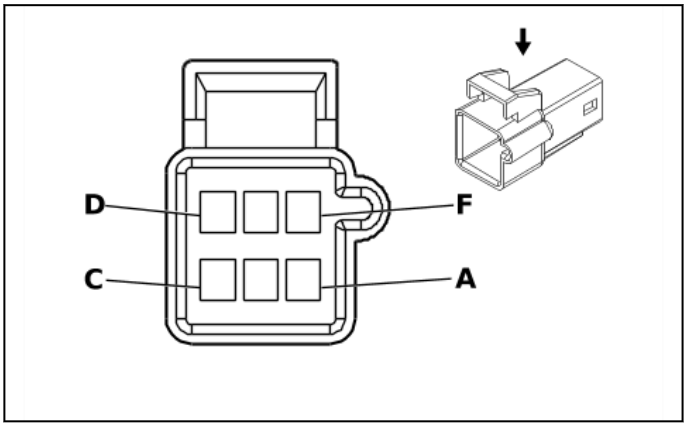

40425

Connector Part Information
- Harness Type: Auxiliary Heater and Air Conditioning Wiring Harness
- OEM Connector: 12064762
- Service Connector: Service by Harness - See Part Catalog
- Description: 6-Way F 150 Metri-Pack Series(GY)

Connector Part Information
- Harness Type: Body Wiring Harness
- OEM Connector: 12064763
- Service Connector: 12101876
- Description: 6-Way M 150 Metri-Pack Series(GY)

Terminal Part Information

Terminal Type ID	Terminated Lead	Diagnostic Test Probe	Terminal Removal Tool
I	Not required	J-35616-14 (GN)	No Tool Required
II	Not required	J-35616-3 (GY)	No Tool Required

X407 Auxiliary Heater and Air Conditioning Wiring Harness to Body Wiring Harness

Pin	Size	Color	Circuit	Terminal Type ID	Option	Function	Pin	Size	Color	Circuit	Terminal Type ID	Option
A	0.35	OG	2775	I	—	Rear Air Temperature Door Actuator Control	A	0.35	OG	2775	II	—
B	0.35	BU	1926	I	—	Auxiliary Blower Motor Low Speed Control 2	B	0.35	BU	1926	II	—
C	0.35	WH	1924	I	—	Auxiliary Blower Motor High Speed Control	C	0.35	WH	1924	II	—

Pin	Size	Color	Circuit	Terminal Type ID	Option	Function	Pin	Size	Color	Circuit	Terminal Type ID	Option
D	0.35	OG	1925	I	—	Auxiliary Blower Motor Medium Speed Control 2	D	0.35	OG	1925	II	—
E	0.35	BN	341	I	—	Run Ignition 3 Voltage	E	0.35	BN	341	II	—
F	0.35	GY	2599	I	—	Rear Mode Door Actuator Signal	F	0.35	GY	2599	II	—

X408 Rear Object Alarm Sensor Wiring Harness to Chassis Wiring Harness

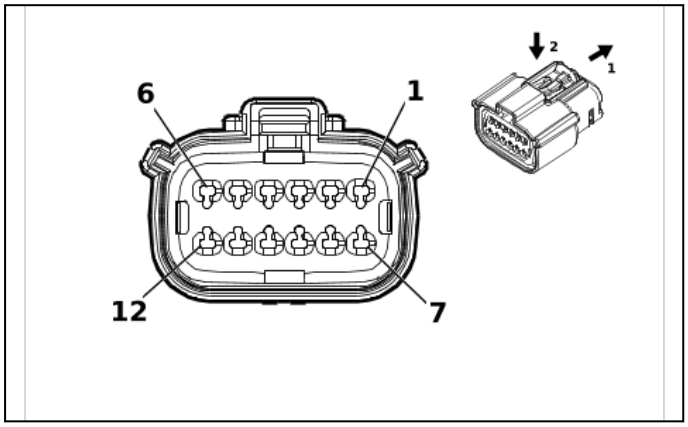

2871860

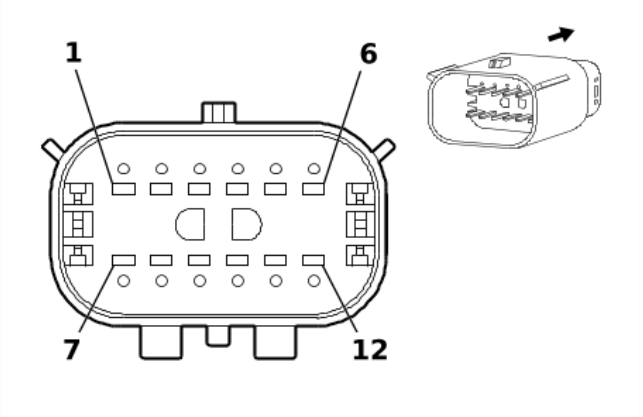

1825167

Connector Part Information
- Harness Type: Rear Object Alarm Sensor Wiring Harness
- OEM Connector: 33472-1206
- Service Connector: Service by Harness - See Part Catalog
- Description: 12-Way F 1.5 MX Series, Sealed(BK)

Connector Part Information
- Harness Type: Chassis Wiring Harness
- OEM Connector: 33482-6201
- Service Connector: 19369242
- Description: 12-Way M 1.5 MX Series, Sealed(BK)

Terminal Part Information

Terminal Type ID	Terminated Lead	Diagnostic Test Probe	Terminal Removal Tool
I	Not required	J-35616-2A (GY)	No Tool Required
II	86800300	J-35616-3 (GY)	J-38125-217

X408 Rear Object Alarm Sensor Wiring Harness to Chassis Wiring Harness

Pin	Size	Color	Circuit	Terminal Type ID	Option	Function	Pin	Size	Color	Circuit	Terminal Type ID	Option
(1) 1	(1) 0.5	(1) YE / WH	(1) 2377	(1) I	(1) —	(1) Right Rear Middle Parking Assist Sensor Signal	(1) 1	(1) 0.5	(1) YE / WH	(1) 2377	(1) II	(1) —
(2) 2	(2) 0.5	(2) PU	(2) 2378	(2) I	(2) —	(2) Right Rear Outer Parking Assist Sensor Signal	(2) 2	(2) 0.5	(2) YE / VT	(2) 2378	(2) II	(2) —

Pin	Size	Color	Circuit	Terminal Type ID	Option	Function	Pin	Size	Color	Circuit	Terminal Type ID	Option
(3) 3	(3) 0.5	(3) BK / GY	(3) 2379	(3) I	(3) —	(3) Object Sensor Low Reference	(3) 3	(3) 0.5	(3) BK / GY	(3) 2379	(3) II	(3) —
(4) 4	(4) 0.5	(4) BN / WH	(4) 2374	(4) I	(4) —	(4) Object Sensor Voltage Reference	(4) 4	(4) 0.5	(4) BN / WH	(4) 2374	(4) II	(4) —
(5) 5	(5) 0.5	(5) YE	(5) 2375	(5) I	(5) —	(5) Left Rear Outer Parking Assist Sensor Signal	(5) 5	(5) 0.5	(5) YE	(5) 2375	(5) II	(5) —
(6) 6	(6) 0.5 (6) 0.5	(6) YE / BU (6) OG	(6) 2376 (6) 2376	(6) I (6) I	(6) - UFT (6) UFT	(6) Left Rear Middle Parking Assist Sensor Signal (6) Left Rear Middle Parking Assist Sensor Signal	(6) 6	(6) 0.5	(6) YE / BU	(6) 2376	(6) II	(6) —
(7) 7	(7) 0.5	(7) BK	(7) 2150	(7) I	(7) —	(7) Ground	(7) 7	(7) 1	(7) BK	(7) 2150	(7) II	(7) —
(8) 8	(8) 0.5	(8) GN	(8) 5060	(8) I	(8) —	(8) Low Speed GMLAN Serial Data	(8) 8	(8) 0.5	(8) GN	(8) 5060	(8) II	(8) —
9	—	—	—	—	—	Not Occupied	9	—	—	—	—	—
(10) 10	(10) 0.5	(10) GY / YE	(10) 5853	(10) I	(10) —	(10) Driver Side Side Object Detection LED Signal 1	(10) 10	(10) 0.5	(10) GY / YE	(10) 5853	(10) II	(10) —
(11) 11	(11) 0.5	(11) GY	(11) 5861	(11) I	(11) —	(11) Passenger Side Object Detection LED Signal 1	(11) 11	(11) 0.5	(11) GY	(11) 5861	(11) II	(11) —
(12) 12	(12) 0.5	(12) RD / GN	(12) 3140	(12) I	(12) —	(12) Battery Positive Voltage	(12) 12	(12) 0.5	(12) RD / GN	(12) 3140	(12) II	(12) —

X409 Auxiliary Heater and Air Conditioning Wiring Harness to Body Wiring Harness

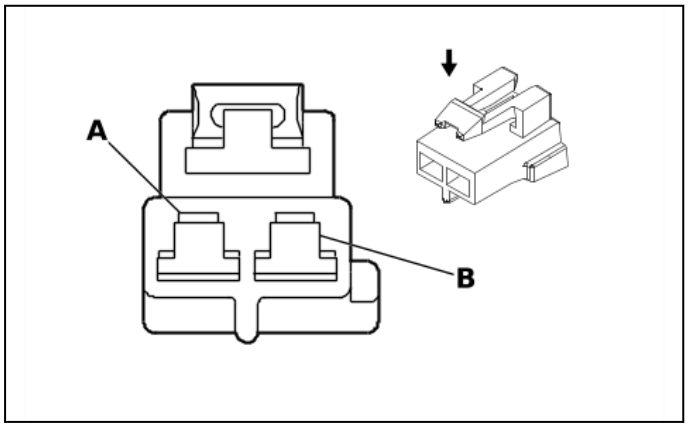

808706

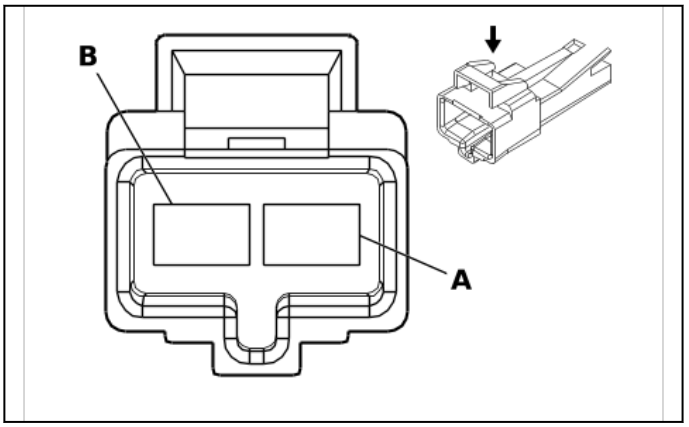

38284

Connector Part Information
- Harness Type: Auxiliary Heater and Air Conditioning Wiring Harness
- OEM Connector: 12064749
- Service Connector: Service by Harness - See Part Catalog
- Description: 2-Way F 480 Metri-Pack Series(BK)

Connector Part Information
- Harness Type: Body Wiring Harness
- OEM Connector: 12064750
- Service Connector: 19368865
- Description: 2-Way M 480 Metri-Pack Series(BK)

Terminal Part Information

Terminal Type ID	Terminated Lead	Diagnostic Test Probe	Terminal Removal Tool
I	Not required	J-35616-40 (BU)	No Tool Required
II	Not required	J-35616-40 (BU)	No Tool Required

X409 Auxiliary Heater and Air Conditioning Wiring Harness to Body Wiring Harness

Pin	Size	Color	Circuit	Terminal Type ID	Option	Function	Pin	Size	Color	Circuit	Terminal Type ID	Option
A	5	RD / WH	1740	I	—	Battery Positive Voltage	A	5	RD / WH	1740	II	—
B	5	BK	850	I	—	Ground	B	5	BK	850	II	—

X410 Tail Lamp Wiring Harness to Body Wiring Harness

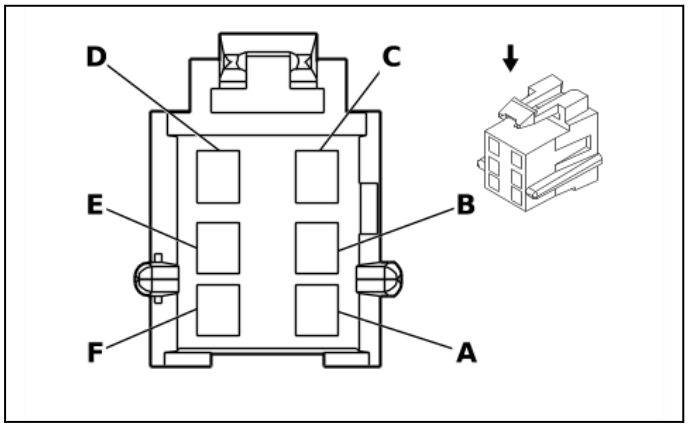

62456

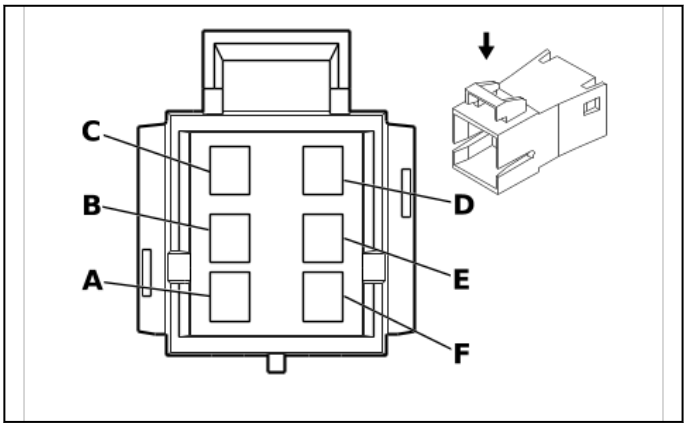

39689

Connector Part Information
- Harness Type: Tail Lamp Wiring Harness
- OEM Connector: 12064752
- Service Connector: Service by Harness - See Part Catalog
- Description: 6-Way F 280 Metri-Pack Series(BK)

Connector Part Information
- Harness Type: Body Wiring Harness
- OEM Connector: 12064754
- Service Connector: 19368739
- Description: 6-Way M 280 Metri-Pack Series(BK)

Terminal Part Information

Terminal Type ID	Terminated Lead	Diagnostic Test Probe	Terminal Removal Tool
I	Not required	J-35616-4A (PU)	No Tool Required
II	Not required	J-35616-5 (PU)	No Tool Required

X410 Tail Lamp Wiring Harness to Body Wiring Harness

Pin	Size	Color	Circuit	Terminal Type ID	Option	Function	Pin	Size	Color	Circuit	Terminal Type ID	Option
A	18	BN	2509	I	—	Left Rear Park Lamp Control	A	0.5	BN	2509	II	—
B	18	YE	618	I	—	Left Rear Turn Signal Lamp Control	B	1	YE	618	II	—
C	—	—	—	—	—	Not Occupied	C	—	—	—	—	—
D	18	BK	850	I	—	Ground	D	0.75	BK	850	II	—
E	—	—	—	—	—	Not Occupied	E	—	—	—	—	—
F	18	GN	24	I	—	Backup Lamp Control	F	0.75	GN	24	II	—

X411 Rear Door Door Wiring Harness to Body Wiring Harness

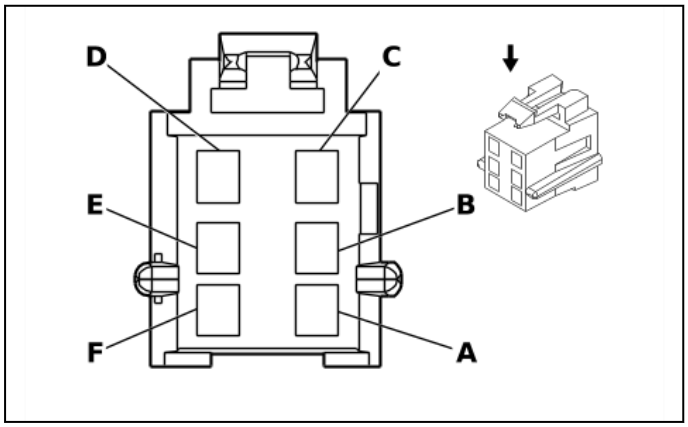

62456

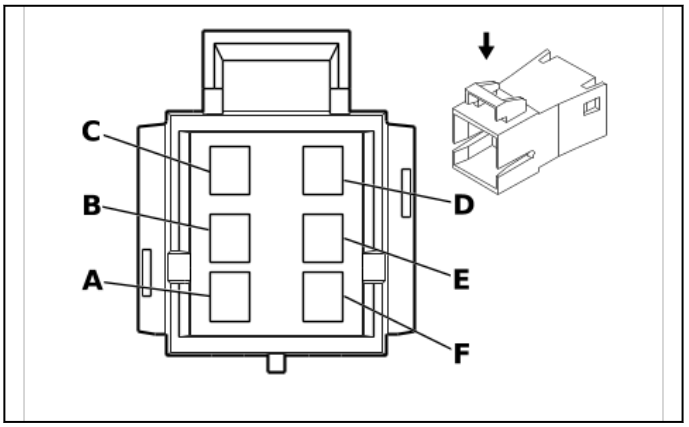

39689

Connector Part Information
- Harness Type: Rear Door Door Wiring Harness
- OEM Connector: 12064752
- Service Connector: Service by Harness - See Part Catalog
- Description: 6-Way F 280 Metri-Pack Series(BK)

Connector Part Information
- Harness Type: Body Wiring Harness
- OEM Connector: 12064754
- Service Connector: 19368739
- Description: 6-Way M 280 Metri-Pack Series(BK)

Terminal Part Information

Terminal Type ID	Terminated Lead	Diagnostic Test Probe	Terminal Removal Tool
I	Not required	J-35616-4A (PU)	No Tool Required
II	Not required	J-35616-5 (PU)	No Tool Required

X411 Rear Door Door Wiring Harness to Body Wiring Harness

Pin	Size	Color	Circuit	Terminal Type ID	Option	Function	Pin	Size	Color	Circuit	Terminal Type ID	Option
A	1	TN	1859	I	—	Left Rear Midrange Speaker [+] Control	A	1	TN	1859	II	—
B	1	WH	1959	I	—	Left Rear Midrange Speaker [-] Control	B	1	WH	1959	II	—
C	—	—	—	—	—	Not Occupied	C	—	—	—	—	—
D	5	PU	293	I	—	Rear Defogger Grid Control	D	5	PU	293	II	—
E	3	BK	850	I	—	Ground	E	3	BK	850	II	—
F	—	—	—	—	—	Not Occupied	F	—	—	—	—	—

X412 Rear Door Door Wiring Harness to Body Wiring Harness

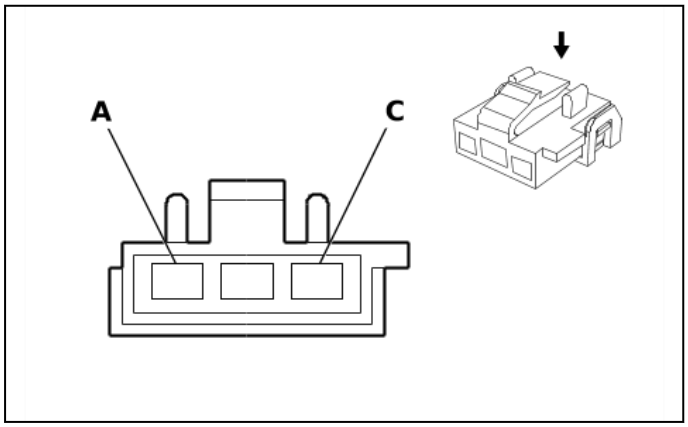

333042

Connector Part Information
- Harness Type: Rear Door Door Wiring Harness
- OEM Connector: 12020014
- Service Connector: Service by Harness - See Part Catalog
- Description: 3-Way F Weather Pack Series, Sealed(BK)

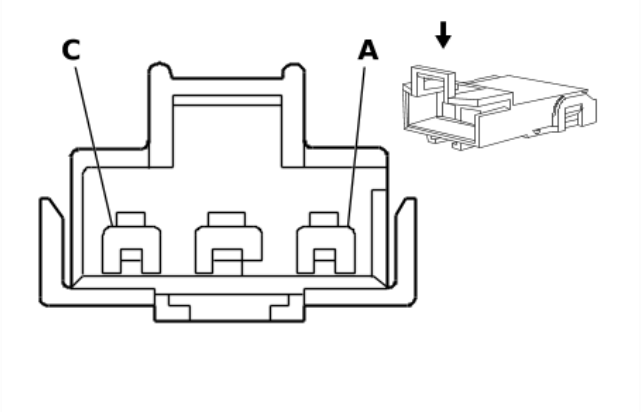

1884161

Connector Part Information
- Harness Type: Body Wiring Harness
- OEM Connector: 12045681
- Service Connector: 19368884
- Description: 3-Way M 280, 480 Metri-Pack Series(BK)

Terminal Part Information

Terminal Type ID	Terminated Lead	Diagnostic Test Probe	Terminal Removal Tool
I	Not required	J-35616-40 (BU)	No Tool Required
II	Not required	J-35616-4A (PU)	No Tool Required
III	Not required	J-35616-40 (BU)	No Tool Required
IV	Not required	J-35616-5 (PU)	No Tool Required

X412 Rear Door Door Wiring Harness to Body Wiring Harness

Pin	Size	Color	Circuit	Terminal Type ID	Option	Function	Pin	Size	Color	Circuit	Terminal Type ID	Option
A	0.5	BN	2509	II	—	Left Rear Park Lamp Control	A	0.5	BN	2509	IV	—
B	5	PU	293	I	—	Rear Defogger Grid Control	B	5	PU	293	III	—
C	0.5 3	BK BK	1050 1050	II	— —	Ground Ground	C	3	BK	1050	IV	—

X415 Radio Rear Speaker Wiring Harness to Body Wiring Harness

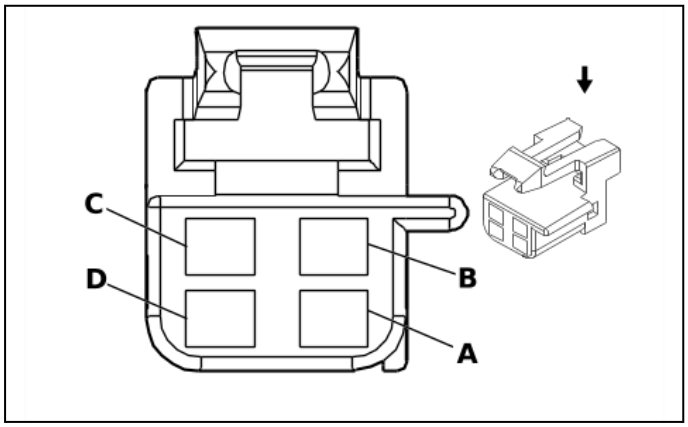

130637

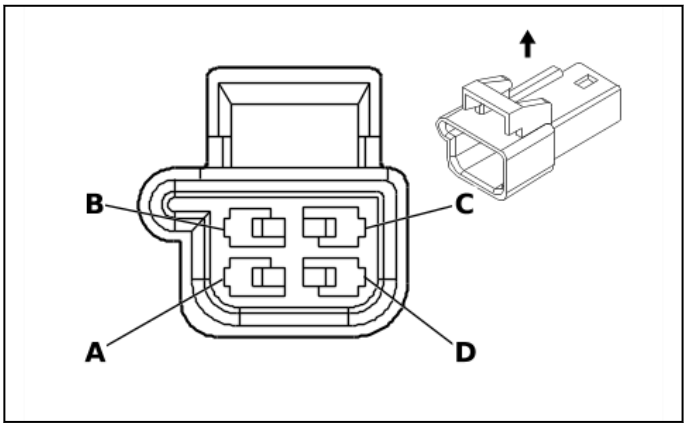

40399

Connector Part Information
- Harness Type: Radio Rear Speaker Wiring Harness
- OEM Connector: 12064760
- Service Connector: Service by Harness - See Part Catalog
- Description: 4-Way F 150 Metri-Pack Series(BK)

Connector Part Information
- Harness Type: Body Wiring Harness
- OEM Connector: 12065658
- Service Connector: 19368719
- Description: 4-Way M 150 Metri-Pack Series(BK)

Terminal Part Information

Terminal Type ID	Terminated Lead	Diagnostic Test Probe	Terminal Removal Tool
I	Not required	J-35616-14 (GN)	No Tool Required
II	Not required	J-35616-3 (GY)	No Tool Required

X415 Radio Rear Speaker Wiring Harness to Body Wiring Harness

Pin	Size	Color	Circuit	Terminal Type ID	Option	Function	Pin	Size	Color	Circuit	Terminal Type ID	Option
A	1	WH	1959	I	—	Left Rear Midrange Speaker [-] Control	A	1	WH	1959	II	—
B	1	TN	1859	I	—	Left Rear Midrange Speaker [+] Control	B	1	TN	1859	II	—
C	1	OG	1955	I	—	Right Rear Midrange Speaker [-] Control	C	1	OG	1955	II	—
D	1	TN	1855	I	—	Right Rear Midrange Speaker [+] Control	D	1	TN	1855	II	—

X419 Center High Mounted to Body Wiring Harness

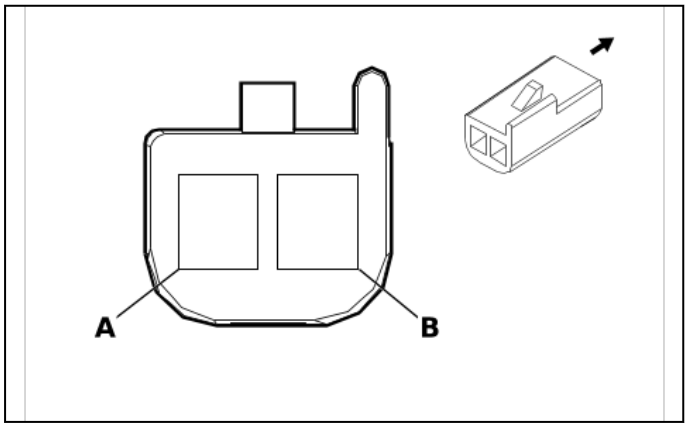

82383

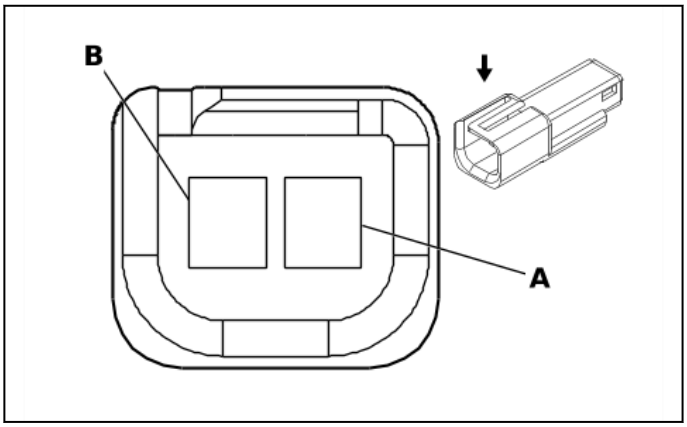

1664595

Connector Part Information
- Harness Type: Center High Mounted
- OEM Connector: Not Available
- Service Connector: Service by Harness - See Part Catalog
- Description: 2-Way F

Connector Part Information
- Harness Type: Body Wiring Harness
- OEM Connector: 12048457
- Service Connector: 13584278
- Description: 2-Way M 150 Metri-Pack Series(BK)

Terminal Part Information

Terminal Type ID	Terminated Lead	Diagnostic Test Probe	Terminal Removal Tool
I	Not required	No Tool Required	No Tool Required
II	Not required	J-35616-3 (GY)	No Tool Required

X419 Center High Mounted to Body Wiring Harness

Pin	Size	Color	Circuit	Terminal Type ID	Option	Function	Pin	Size	Color	Circuit	Terminal Type ID	Option
A	0.75	BU	1320	I	—	Center High Mounted Stop Lamp Control 2	A	0.75	BU	1320	II	—
B	0.75	BK	850	I	—	Ground	B	0.75	BK	850	II	—

X420 Tail Lamp Wiring Harness to Body Wiring Harness

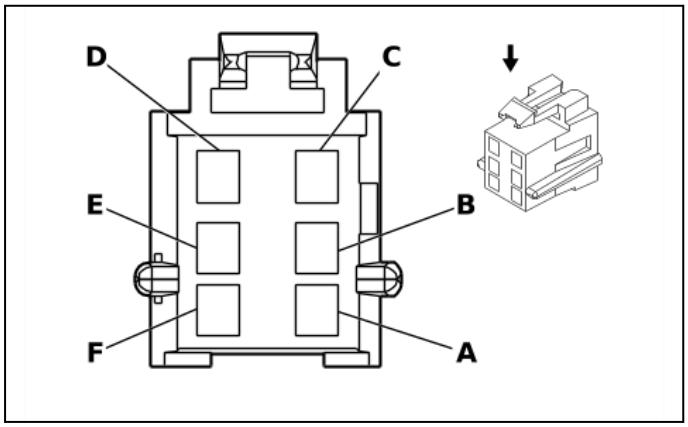

62456

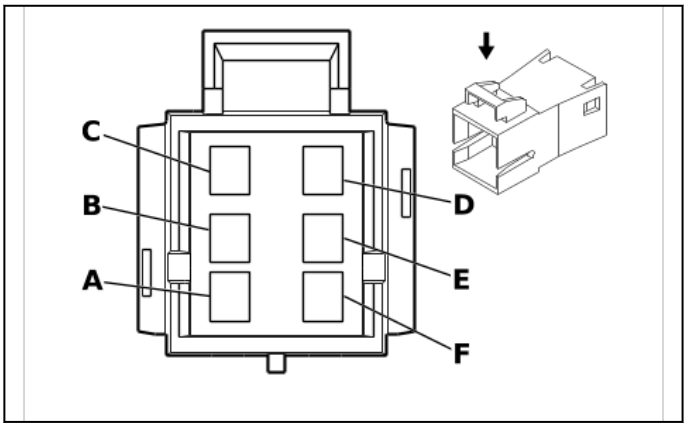

39689

Connector Part Information
- Harness Type: Tail Lamp Wiring Harness
- OEM Connector: Not Available
- Service Connector: Service by Harness - See Part Catalog
- Description: 6-Way F

Connector Part Information
- Harness Type: Body Wiring Harness
- OEM Connector: 12064754
- Service Connector: 19368739
- Description: 6-Way M 280 Metri-Pack Series(BK)

Terminal Part Information

Terminal Type ID	Terminated Lead	Diagnostic Test Probe	Terminal Removal Tool
I	Not required	No Tool Required	No Tool Required
II	Not required	J-35616-5 (PU)	No Tool Required

X420 Tail Lamp Wiring Harness to Body Wiring Harness

Pin	Size	Color	Circuit	Terminal Type ID	Option	Function	Pin	Size	Color	Circuit	Terminal Type ID	Option
A	0.5	BN	2609	I	—	Right Rear Park Lamp Control	A	0.5	BN	2609	II	—
B	1	GN	619	I	—	Right Rear Turn Signal Lamp Control	B	1	GN	619	II	—
C	—	—	—	—	—	Not Occupied	C	—	—	—	—	—
D	0.75	BK	1050	I	—	Ground	D	0.75	BK	1050	II	—
E	—	—	—	—	—	Not Occupied	E	—	—	—	—	—
F	0.75	GN	24	I	—	Backup Lamp Control	F	0.75	GN	24	II	—

X421 Roof Console Wiring Harness - Rear Extension to Body Wiring Harness

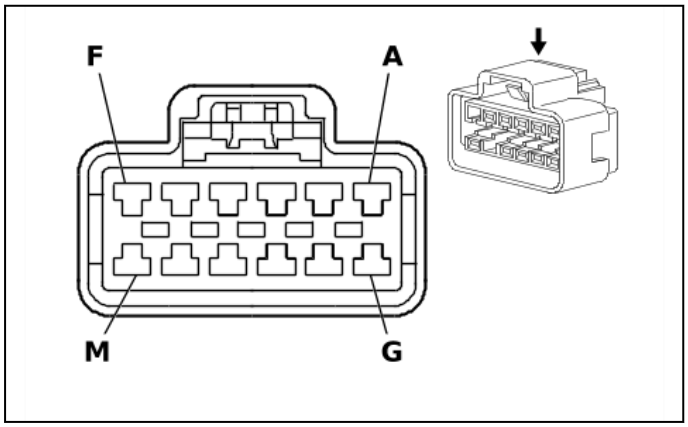

476149

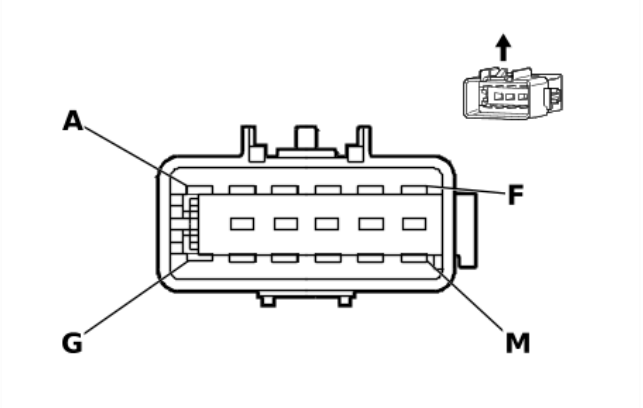

847281

Connector Part Information
- Harness Type: Roof Console Wiring Harness - Rear Extension
- OEM Connector: 15326110
- Service Connector: 15326110
- Description: 12-Way F 280 GT Series(BK)

Connector Part Information
- Harness Type: Body Wiring Harness
- OEM Connector: 15326942
- Service Connector: 15326942
- Description: 12-Way M 280 GT Series(BK)

Terminal Part Information

Terminal Type ID	Terminated Lead	Diagnostic Test Probe	Terminal Removal Tool
I	13575503	J-35616-4A (PU)	J-38125-215A
II	13575753	J-35616-4A (PU)	J-38125-215A
III	13575505	J-35616-5 (PU)	J-38125-215A
IV	13575507	J-35616-5 (PU)	J-38125-215A

X421 Roof Console Wiring Harness - Rear Extension to Body Wiring Harness

Pin	Size	Color	Circuit	Terminal Type ID	Option	Function	Pin	Size	Color	Circuit	Terminal Type ID	Option
A	0.75	BU / WH	149	II	—	Courtesy Lamp Control	A	0.75	BU / WH	149	IV	—
B	0.75	BU / WH	149	II	—	Courtesy Lamp Control	B	0.75	BU / WH	149	IV	—
C	0.35	BN / WH	230	I	—	Instrument Panel Lamp Dimming Control	C	0.35	BN / WH	230	III	—
D	0.5	WH	1924	I	—	Auxiliary Blower Motor High Speed Control	D	0.5	WH	1924	III	—
E	0.5	OG	1925	I	—	Auxiliary Blower Motor Medium Speed Control 2	E	0.5	OG	1925	III	—
F	0.5	BU	1926	I	—	Auxiliary Blower Motor Low Speed Control 2	F	0.5	BU	1926	III	—
G	0.35	BN	341	I	—	Run Ignition 3 Voltage	G	0.35	BN	341	III	—

Pin	Size	Color	Circuit	Terminal Type ID	Option	Function	Pin	Size	Color	Circuit	Terminal Type ID	Option
H	0.75	BK	1050	II	—	Ground	H	0.75	BK	1050	IV	—
J	0.75	OG	1732	II	—	Control Module 12V Reference 3	J	0.75	OG	1732	IV	—
K	0.5	BN	5263	I	—	Auxiliary HVAC Rear Temperature Signal	K	0.5	BN	5263	III	—
L	0.5	PU / WH	5264	I	—	Auxiliary HVAC Rear Mode Signal	L	0.5	PU / WH	5264	III	—
M	0.5	PK / BK	5265	I	—	Auxiliary HVAC Rear Control Signal	M	0.5	PK / BK	5265	III	—

X450 Trailer Jumper Wiring Harness to Chassis Wiring Harness (NE7)

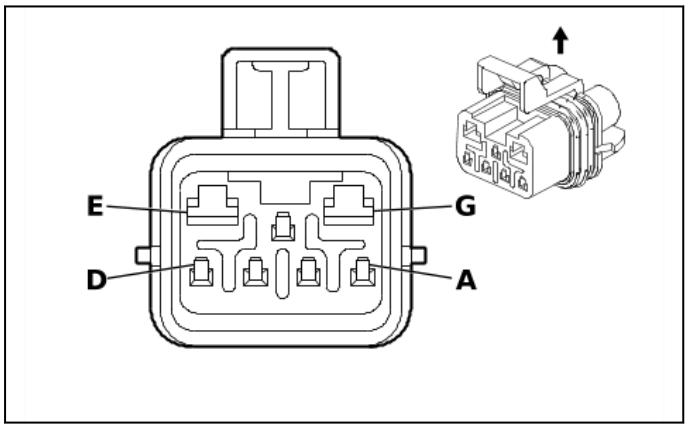

816167

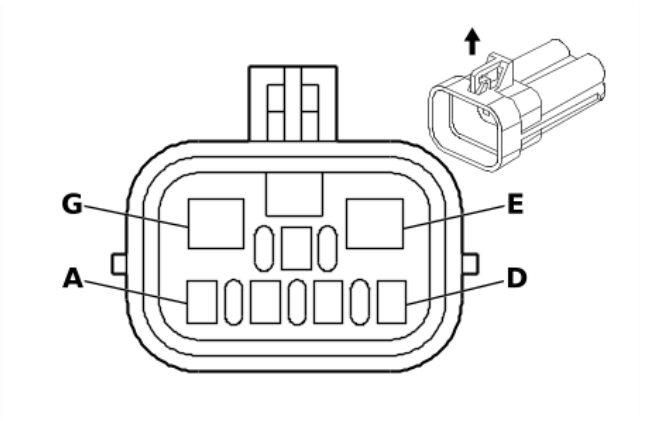

1372292

Connector Part Information
- Harness Type: Trailer Jumper Wiring Harness
- OEM Connector: Not Available
- Service Connector: Service by Harness - See Part Catalog
- Description: 7-Way F

Connector Part Information
- Harness Type: Chassis Wiring Harness
- OEM Connector: 12052200
- Service Connector: 85067476
- Description: 7-Way M 150, 480 Metri-Pack Series, Sealed(BK)

Terminal Part Information

Terminal Type ID	Terminated Lead	Diagnostic Test Probe	Terminal Removal Tool
I	Not required	No Tool Required	No Tool Required
II	Not required	J-35616-3 (GY)	No Tool Required
III	Not required	J-35616-41 (BU)	No Tool Required

X450 Trailer Jumper Wiring Harness to Chassis Wiring Harness (NE7)

Pin	Size	Color	Circuit	Terminal Type ID	Option	Function	Pin	Size	Color	Circuit	Terminal Type ID	Option
A	1	GN	1624	I	—	Trailer Backup Lamp Control	A	1	GN	1624	II	—
B	1	BN	2109	I	—	Trailer Park Lamp Control	B	1	BN	2109	II	—

Pin	Size	Color	Circuit	Terminal Type ID	Option	Function	Pin	Size	Color	Circuit	Terminal Type ID	Option
C	1	YE	1618	I	—	Left Rear Trailer Stop/ Turn Lamp Control	C	1	YE	1618	II	—
D	—	—	—	—	—	Not Occupied	D	—	—	—	—	—
E	3	BU	47	I	—	Trailer Auxiliary Control	E	3	BU	47	III	—
F	1	GN	1619	I	—	Right Rear Trailer Stop/ Turn Lamp Control	F	1	GN	1619	II	—
G	3	RD / BK	742	I	—	Battery Positive Voltage	G	3	RD / BK	742	III	—

X460 Chassis Wiring Harness to Chassis Wiring Harness

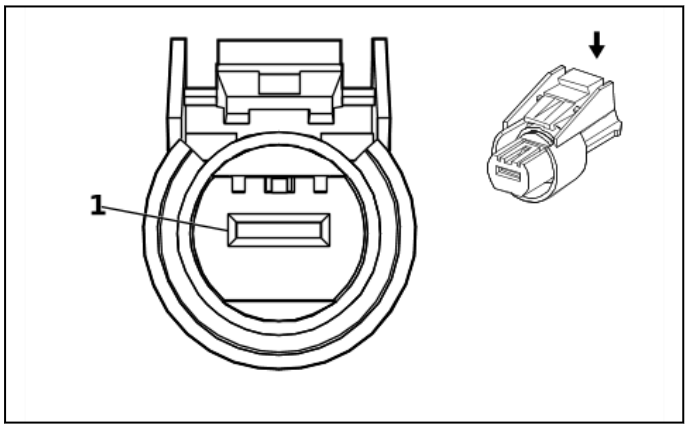

814659

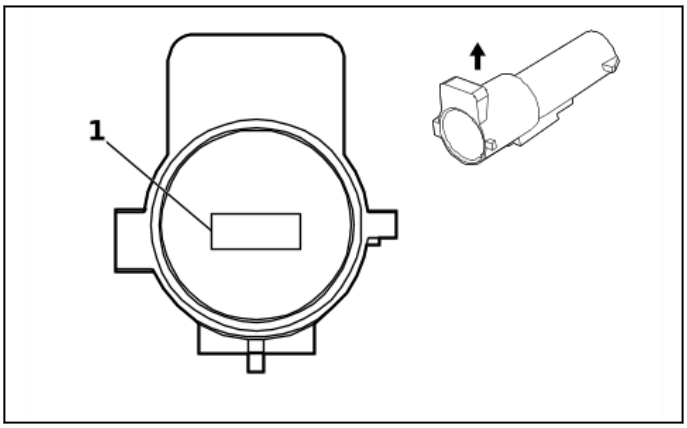

814660

Connector Part Information
- Harness Type: Chassis Wiring Harness
- OEM Connector: 15326120
- Service Connector: Service by Harness - See Part Catalog
- Description: 1-Way F 800 Metri-Pack Series, Sealed(BK)

Connector Part Information
- Harness Type: Chassis Wiring Harness
- OEM Connector: 15326119
- Service Connector: Service by Harness - See Part Catalog
- Description: 1-Way M 800 Metri-Pack Series, Sealed(BK)

Terminal Part Information

Terminal Type ID	Terminated Lead	Diagnostic Test Probe	Terminal Removal Tool
I	Not required	J-35616-44 (YE)	No Tool Required
II	Not required	J-35616-45 (YE)	No Tool Required

X460 Chassis Wiring Harness to Chassis Wiring Harness

Pin	Size	Color	Circuit	Terminal Type ID	Option	Function	Pin	Size	Color	Circuit	Terminal Type ID	Option
(1) 1	(1) 8	(1) W H	(1) 22	(1) I	(1) —	(1) Trailer Ground	(1) 1	(1) 8	(1) W H	(1) 22	(1) II	(1) —

X500 Front Side Door Door Wiring Harness - Driver to Body Wiring Harness

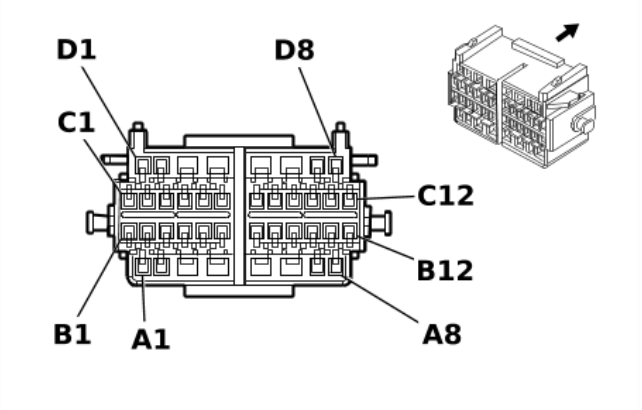

1538788

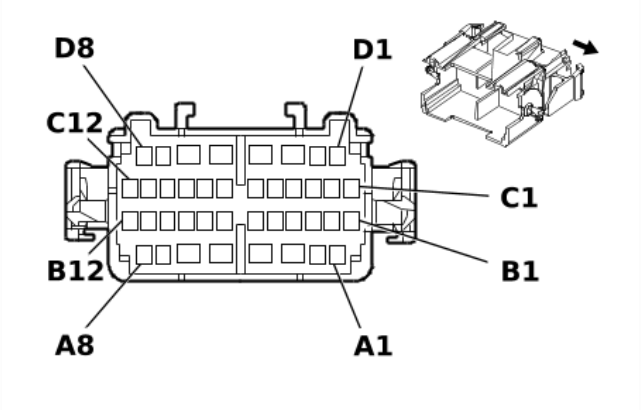

1715230

Connector Part Information

- Harness Type: Front Side Door Door Wiring Harness - Driver
- OEM Connector: 15448129
- Service Connector: Service by Harness - See Part Catalog
- Description: 40-Way F 150, 280 GT Series(BK)

Connector Part Information

- Harness Type: Body Wiring Harness
- OEM Connector: 15416976
- Service Connector: 89047197
- Description: 40-Way M 150, 280 GT Series, Sealed(BK)

Terminal Part Information

Terminal Type ID	Terminated Lead	Diagnostic Test Probe	Terminal Removal Tool
I	Not required	J-35616-14 (GN)	No Tool Required
II	Not required	J-35616-2A (GY)	No Tool Required
III	Not required	J-35616-4A (PU)	No Tool Required
IV	13575500	J-35616-3 (GY)	J-38125-215A
V	13575502	J-35616-3 (GY)	J-38125-215A
VI	13575505	J-35616-5 (PU)	J-38125-215A
VII	13575508	J-35616-5 (PU)	J-38125-215A

X500 Front Side Door Door Wiring Harness - Driver to Body Wiring Harness

Pin	Size	Color	Circuit	Terminal Type ID	Option	Function	Pin	Size	Color	Circuit	Terminal Type ID	Option
A1	0.35	TN	126	II	—	Left Front Door Open Switch Signal	A1	0.35	TN	126	IV	—
A2 - A4	—	—	—	—	—	Not Occupied	A2 - A4	—	—	—	—	—
A5	3	BK	450	III	—	Ground	A5	3	BK	450	VII	—
A6	0.35	BN / WH	230	III	—	Instrument Panel Lamp Dimming Control	A6	0.35	BN / WH	230	VI	—
A7	0.75	OG	2267	I	—	Outside Rearview Mirror Heater Control	A7	0.75	OG	2267	V	—
A8	0.35	PU / WH	889	II	—	Right Outside Rearview Mirror Motor Down Control	A8	0.5	PU / WH	889	IV	—

Pin	Size	Color	Circuit	Terminal Type ID	Option	Function	Pin	Size	Color	Circuit	Terminal Type ID	Option
B1	0.35	OG / BK	781	II	—	Driver Door Lock Switch Unlock Signal	B1	0.35	OG / BK	781	IV	—
B2	0.35	PK / BK	780	II	—	Driver Door Lock Switch Lock Signal	B2	0.35	PK / BK	780	IV	—
B3	0.35	GY / BK	745	II	—	Left Front Door Ajar Switch Signal	B3	0.35	GY / BK	745	IV	—
B4	0.35	BK	450	II	—	Ground	B4	0.35	BK	450	IV	—
B5 - B6	—	—	—	—	—	Not Occupied	B5 - B6	—	—	—	—	—
B7	0.75	TN	694	I	—	Driver Door Lock Actuator Unlock Control	B7	0.75	TN	694	V	—
B8	0.75	GY	295	I	—	Door Lock Actuator Lock Control	B8	0.75	GY	295	V	—
B9 - B11	—	—	—	—	—	Not Occupied	B9 - B11	—	—	—	—	—
B12	0.75	BU	1857	I	—	Left Front Midrange Speaker [+] Control	B12	0.75	BU	1857	V	—
C1	0.5	PU / WH	6628	II	—	Left Front Side Impact Sensor Low Reference	C1	0.5	PU / WH	6628	IV	—
C2	0.5	WH	2132	II	—	Left Front Side Impact Sensor Signal	C2	0.5	WH	2132	IV	—
C3 - C6	—	—	—	—	—	Not Occupied	C3 - C6	—	—	—	—	—
C7	0.5	BU / WH	1314	II	—	Left Front Turn Signal Lamp Control	C7	0.5	BU / WH	1314	IV	—
C8	0.5	RD / WH	4340	II	—	Battery Positive Voltage	C8	0.5	RD / WH	4340	IV	—
C9 - C11	—	—	—	—	—	Not Occupied	C9 - C11	—	—	—	—	—
C12	0.75	BU	1957	I	—	Left Front Midrange Speaker [-] Control	C12	0.75	BU	1957	V	—
D1 - D3	—	—	—	—	—	Not Occupied	D1 - D3	—	—	—	—	—
D4	3	TN	167	III	—	Right Front Window Down Switch Main Control Signal	D4	3	TN	167	VII	—
D5	3	BU	166	III	—	Right Front Window Up Switch Main Control Signal	D5	3	BU	166	VII	—

Pin	Size	Color	Circuit	Terminal Type ID	Option	Function	Pin	Size	Color	Circuit	Terminal Type ID	Option
D6	3	GN	1001	III	—	Retained Accessory Power Igni-tion Voltage	D6	3	GN	1001	VII	—
D7	0.35	BN / WH	1498	II	—	Right Outside Rearview Mirror Motor Up Control	D7	0.5	BN / WH	1498	IV	—
D8	0.35	OG / WH	881	II	—	Right Outside Rearview Mirror Motor Right Control	D8	0.5	OG / WH	881	IV	—

X501 Airbag Wiring Harness to Front Side Door Door Wiring Harness - Driver (ASF)

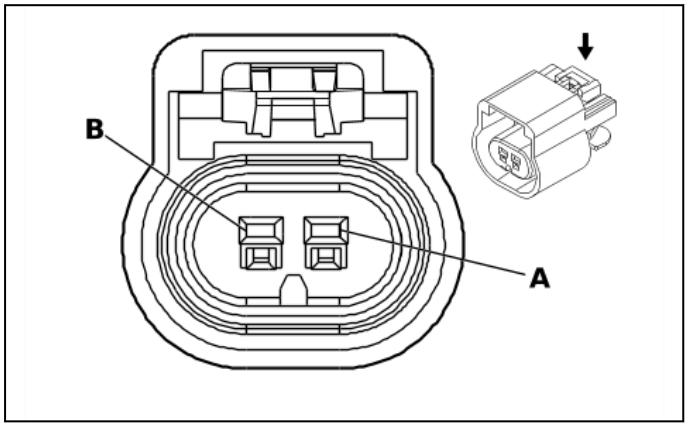

523630

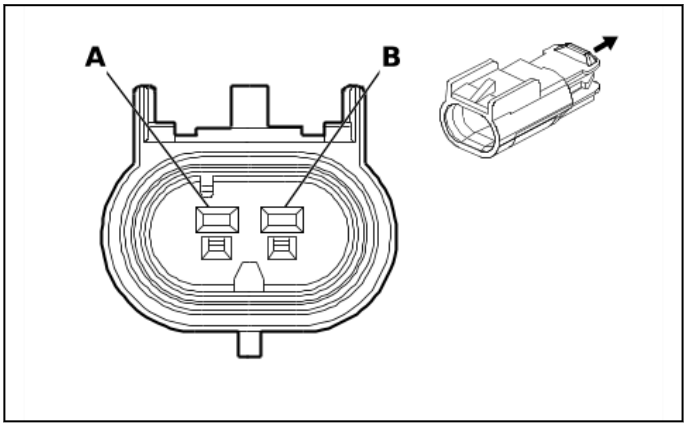

681875

Connector Part Information
- Harness Type: Airbag Wiring Harness
- OEM Connector: 13510085
- Service Connector: Service by Harness - See Part Catalog
- Description: 2-Way F 150 GT Series, Sealed(BK)

Connector Part Information
- Harness Type: Front Side Door Door Wiring Harness - Driver
- OEM Connector: 13510099
- Service Connector: Service by Harness - See Part Catalog
- Description: 2-Way M 150 GT Series, Sealed(BK)

Terminal Part Information

Terminal Type ID	Terminated Lead	Diagnostic Test Probe	Terminal Removal Tool
I	Not required	J-35616-2A (GY)	No Tool Required
II	Not required	J-35616-3 (GY)	No Tool Required

X501 Airbag Wiring Harness to Front Side Door Door Wiring Harness - Driver (ASF)

Pin	Size	Color	Circuit	Terminal Type ID	Option	Function	Pin	Size	Color	Circuit	Terminal Type ID	Option
A	0.5	PU / WH	6628	I	—	Left Front Side Impact Sensor Low Reference	A	0.5	PU / WH	6628	II	—
B	0.5	WH	2132	I	—	Left Front Side Impact Sensor Signal	B	0.5	WH	2132	II	—

X600 Front Side Door Door Wiring Harness - Passenger to Body Wiring Harness

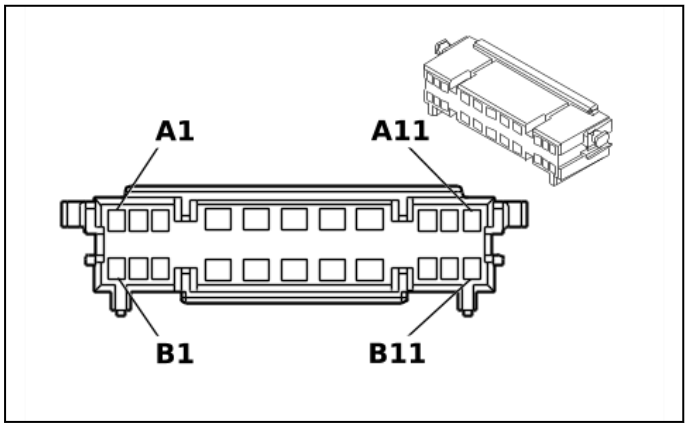

524205

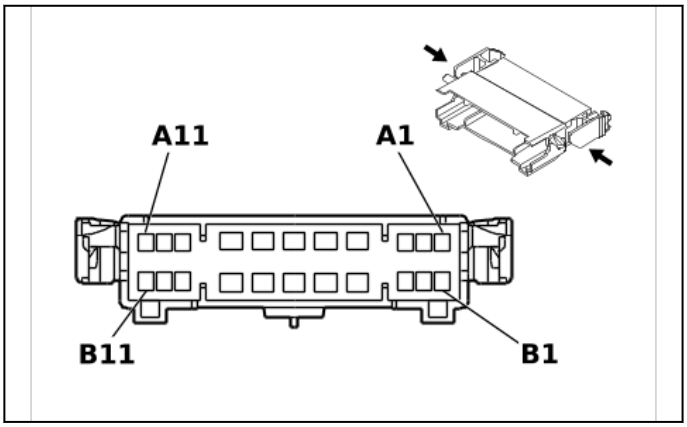

524211

Connector Part Information

- Harness Type: Front Side Door Door Wiring Harness - Passenger
- OEM Connector: 15326063
- Service Connector: Service by Harness - See Part Catalog
- Description: 22-Way F 150, 280 GT Series, Sealed(GY)

Connector Part Information

- Harness Type: Body Wiring Harness
- OEM Connector: 15326064
- Service Connector: Service by Harness - See Part Catalog
- Description: 22-Way M 150, 280 GT Series, Sealed(GY)

Terminal Part Information

Terminal Type ID	Terminated Lead	Diagnostic Test Probe	Terminal Removal Tool
I	Not required	J-35616-14 (GN)	No Tool Required
II	Not required	J-35616-2A (GY)	No Tool Required
III	Not required	J-35616-4A (PU)	No Tool Required
IV	Not required	J-35616-3 (GY)	J-38125-215A
V	Not required	J-35616-5 (PU)	J-38125-215A

X600 Front Side Door Door Wiring Harness - Passenger to Body Wiring Harness

Pin	Size	Color	Circuit	Terminal Type ID	Option	Function	Pin	Size	Color	Circuit	Terminal Type ID	Option
A1	0.75	OG	1853	I	—	Right Front Midrange Speaker [+] Control	A1	0.75	OG	1853	IV	—
A2	0.75	TN	294	I	—	Door Lock Actuator Unlock Control	A2	0.75	TN	294	IV	—
A3	0.75	OG	2267	I	—	Outside Rearview Mirror Heater Control	A3	0.75	OG	2267	IV	—
A4	3	BU	166	III	—	Right Front Window Up Switch Main Control Signal	A4	3	BU	166	V	—
A5	0.75	BK	1850	III	—	Ground	A5	0.75	BK	1850	V	—
A6	0.35	BN / WH	1498	III	—	Right Outside Rearview Mirror Motor Up Control	A6	0.5	BN / WH	1498	V	—

Pin	Size	Color	Circuit	Terminal Type ID	Option	Function	Pin	Size	Color	Circuit	Terminal Type ID	Option
A7	0.35	OG / WH	881	III	—	Right Outside Rearview Mirror Motor Right Control	A7	0.5	OG / WH	881	V	—
A8	0.35	TN / WH	746	III	—	Right Front Door Ajar Switch Signal	A8	0.35	TN / WH	746	V	—
A9	0.35	BK	1850	II	—	Ground	A9	0.35	BK	1850	IV	—
A10	0.5	GN	2134	II	—	Right Front Side Impact Sensor Signal	A10	0.5	GN	2134	IV	—
A11	0.35	BU	244	II	—	Passenger Door Lock Switch Lock Control	A11	0.35	BU	244	IV	—
B1	0.75	GN	1953	I	—	Right Front Midrange Speaker [-] Control	B1	0.75	GN	1953	IV	—
B2	0.75	GY	295	I	—	Door Lock Actuator Lock Control	B2	0.75	GY	295	IV	—
B3	0.5	BU / WH	1315	II	—	Right Front Turn Signal Lamp Control	B3	0.5	BU / WH	1315	IV	—
B4	3	TN	167	III	—	Right Front Window Down Switch Main Control Signal	B4	3	TN	167	V	—
B5	3	GN	1001	III	—	Retained Accessory Power Igni-tion Voltage	B5	3	GN	1001	V	—
B6	0.35	BN / WH	230	III	—	Instrument Panel Lamp Dimming Control	B6	0.35	BN / WH	230	V	—
B7	0.35	PU / WH	889	III	—	Right Outside Rearview Mirror Motor Down Control	B7	0.5	PU / WH	889	V	—
B8	0.35	GN	1177	III	—	Right Front Door Open Switch Signal	B8	0.35	GN	1177	V	—
B9	—	—	—	—	—	Not Occupied	B9	—	—	—	—	—
B10	0.5	WH / BK	6629	II	—	Right Front Side Impact Sensor Low Reference	B10	0.5	WH / BK	6629	IV	—
B11	0.35	BU	245	II	—	Passenger Door Lock Switch Unlock Control	B11	0.35	BU	245	IV	—

X601 Side Impact Sensor - Right Front Jumper Wiring Harness to Front Side Door Door Wiring Harness - Passenger (ASF)

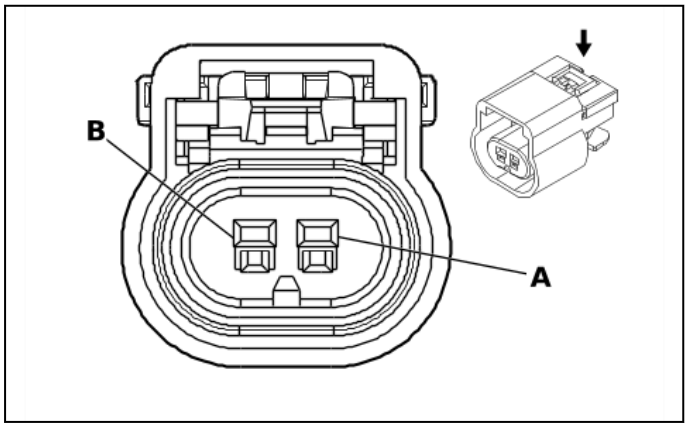

632351

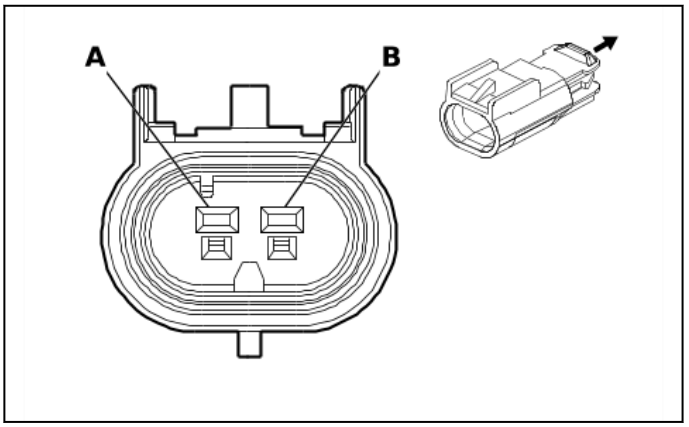

681875

Connector Part Information
- Harness Type: Side Impact Sensor - Right Front Jumper Wiring Harness
- OEM Connector: Not Available
- Service Connector: Service by Harness - See Part Catalog
- Description: 2-Way F

Connector Part Information
- Harness Type: Front Side Door Door Wiring Harness - Passenger
- OEM Connector: 13510099
- Service Connector: Service by Harness - See Part Catalog
- Description: 2-Way M 150 GT Series, Sealed(BK)

Terminal Part Information

Terminal Type ID	Terminated Lead	Diagnostic Test Probe	Terminal Removal Tool
I	Not required	No Tool Required	No Tool Required
II	Not required	J-35616-3 (GY)	No Tool Required

X601 Side Impact Sensor - Right Front Jumper Wiring Harness to Front Side Door Door Wiring Harness - Passenger (ASF)

Pin	Size	Color	Circuit	Terminal Type ID	Option	Function	Pin	Size	Color	Circuit	Terminal Type ID	Option
A	0.5	WH / BK	6629	I	—	Right Front Side Impact Sensor Low Reference	A	0.5	WH / BK	6629	II	—
B	0.5	GN	2134	I	—	Right Front Side Impact Sensor Signal	B	0.5	GN	2134	II	—

X901 Rear Window Defogger Wiring Harness to Rear Door Door Wiring Harness

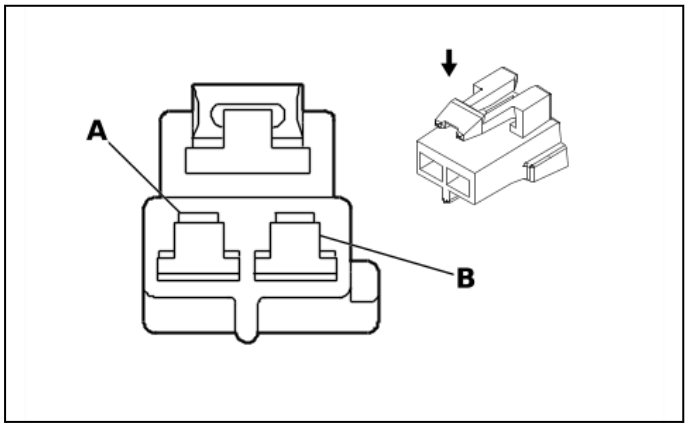

808706

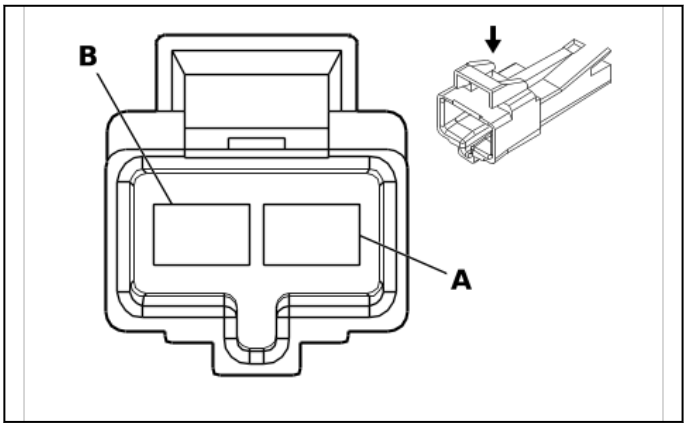

38284

Connector Part Information
- Harness Type: Rear Window Defogger Wiring Harness
- OEM Connector: 12064749
- Service Connector: Service by Harness - See Part Catalog
- Description: 2-Way F 480 Metri-Pack Series(BK)

Connector Part Information
- Harness Type: Rear Door Door Wiring Harness
- OEM Connector: 12064750
- Service Connector: Service by Harness - See Part Catalog
- Description: 2-Way M 480 Metri-Pack Series(BK)

Terminal Part Information

Terminal Type ID	Terminated Lead	Diagnostic Test Probe	Terminal Removal Tool
I	Not required	J-35616-40 (BU)	No Tool Required
II	Not required	J-35616-40 (BU)	No Tool Required

X901 Rear Window Defogger Wiring Harness to Rear Door Door Wiring Harness

Pin	Size	Color	Circuit	Terminal Type ID	Option	Function	Pin	Size	Color	Circuit	Terminal Type ID	Option
A	5	PU	293	I	—	Rear Defogger Grid Control	A	5	PU	293	II	—
B	3	BK	850	I	—	Ground	B	3	BK	850	II	—

X902 Rear Window Defogger Wiring Harness to Rear Door Door Wiring Harness

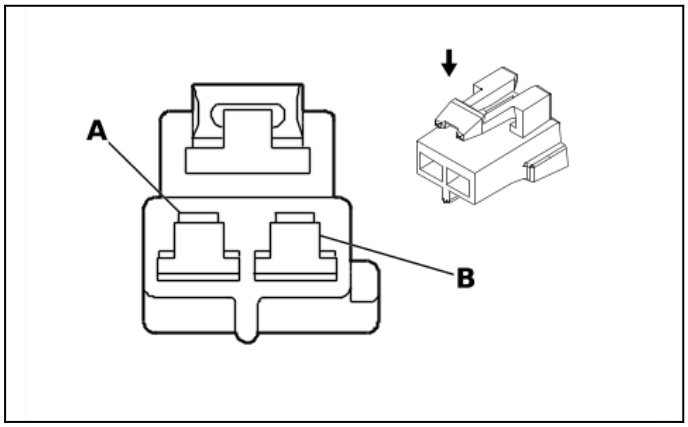

808706

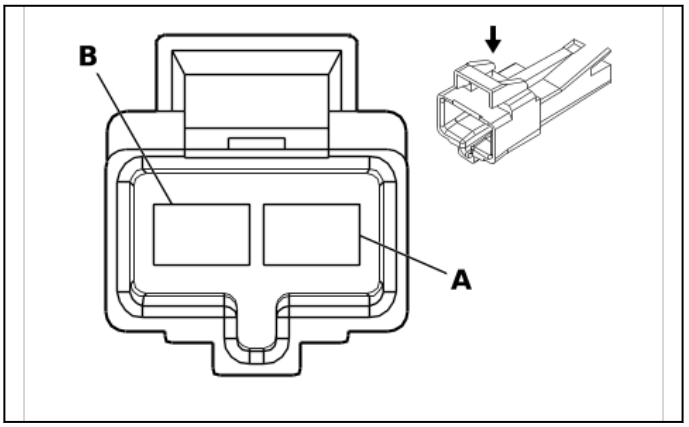

38284

Connector Part Information
- Harness Type: Rear Window Defogger Wiring Harness
- OEM Connector: Not Available
- Service Connector: Service by Harness - See Part Catalog
- Description: 2-Way F

Connector Part Information
- Harness Type: Rear Door Door Wiring Harness
- OEM Connector: 12064750
- Service Connector: Service by Harness - See Part Catalog
- Description: 2-Way M 480 Metri-Pack Series(BK)

Terminal Part Information

Terminal Type ID	Terminated Lead	Diagnostic Test Probe	Terminal Removal Tool
I	Not required	No Tool Required	No Tool Required
II	Not required	J-35616-40 (BU)	No Tool Required

X902 Rear Window Defogger Wiring Harness to Rear Door Door Wiring Harness

Pin	Size	Color	Circuit	Terminal Type ID	Option	Function	Pin	Size	Color	Circuit	Terminal Type ID	Option
A	5	PU	293	I	—	Rear Defogger Grid Control	A	5	PU	293	II	—
B	3	BK	1050	I	—	Ground	B	3	BK	1050	II	—

Electrical Component Locator and Harness Routing Views

Schematic and Routing Diagrams

Forward Lamp Harness Routing

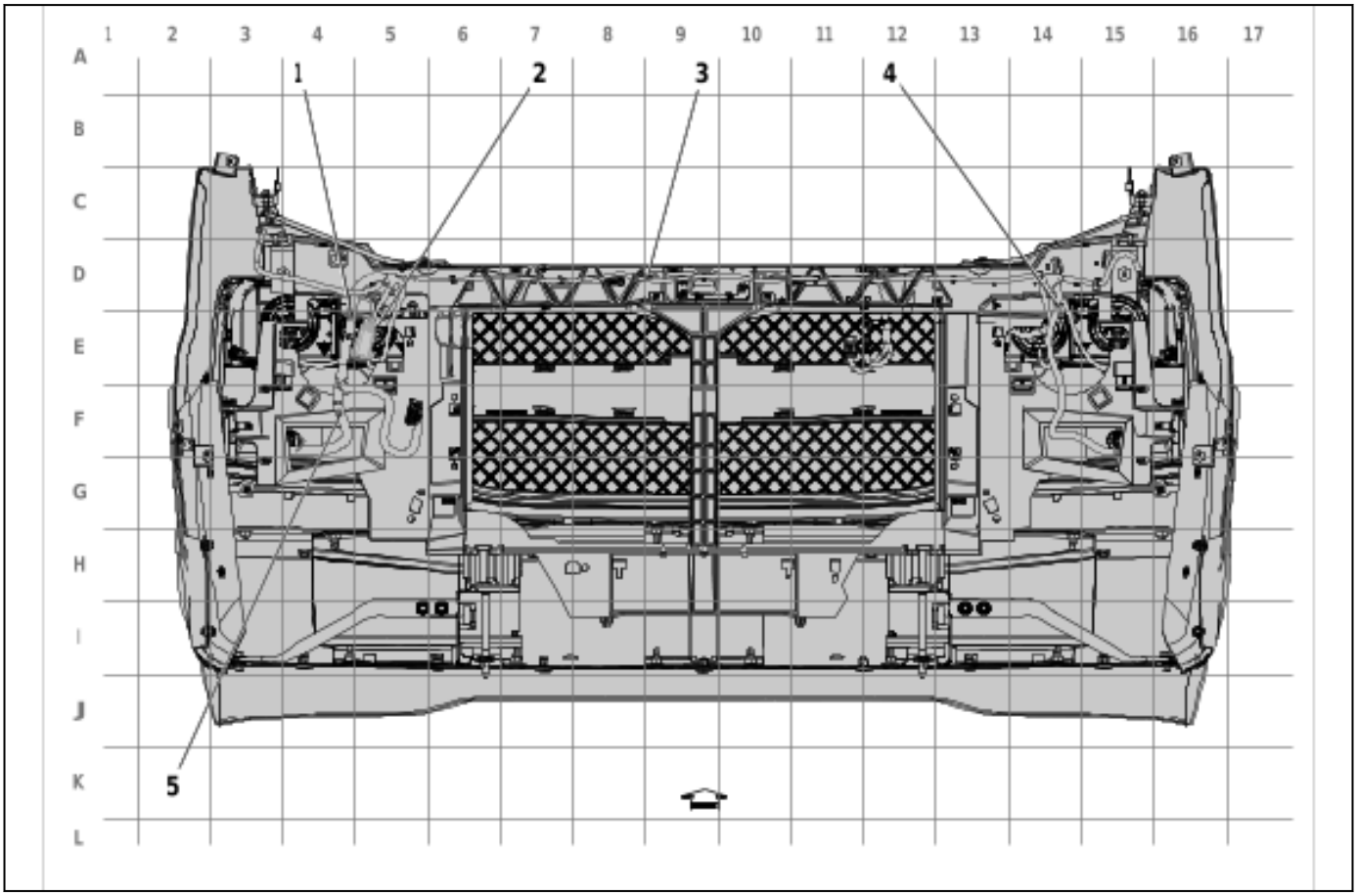

6040694

Items
(1) J100 Forward Lamp Wiring Harness
(2) X150 Instrument Panel Wiring Harness to Forward Lamp Wiring Harness
(3) J122 Forward Lamp Wiring Harness
(4) J110 Forward Lamp Wiring Harness
(5) J121 Forward Lamp Wiring Harness

Engine Harness Routing - Front (L8T)

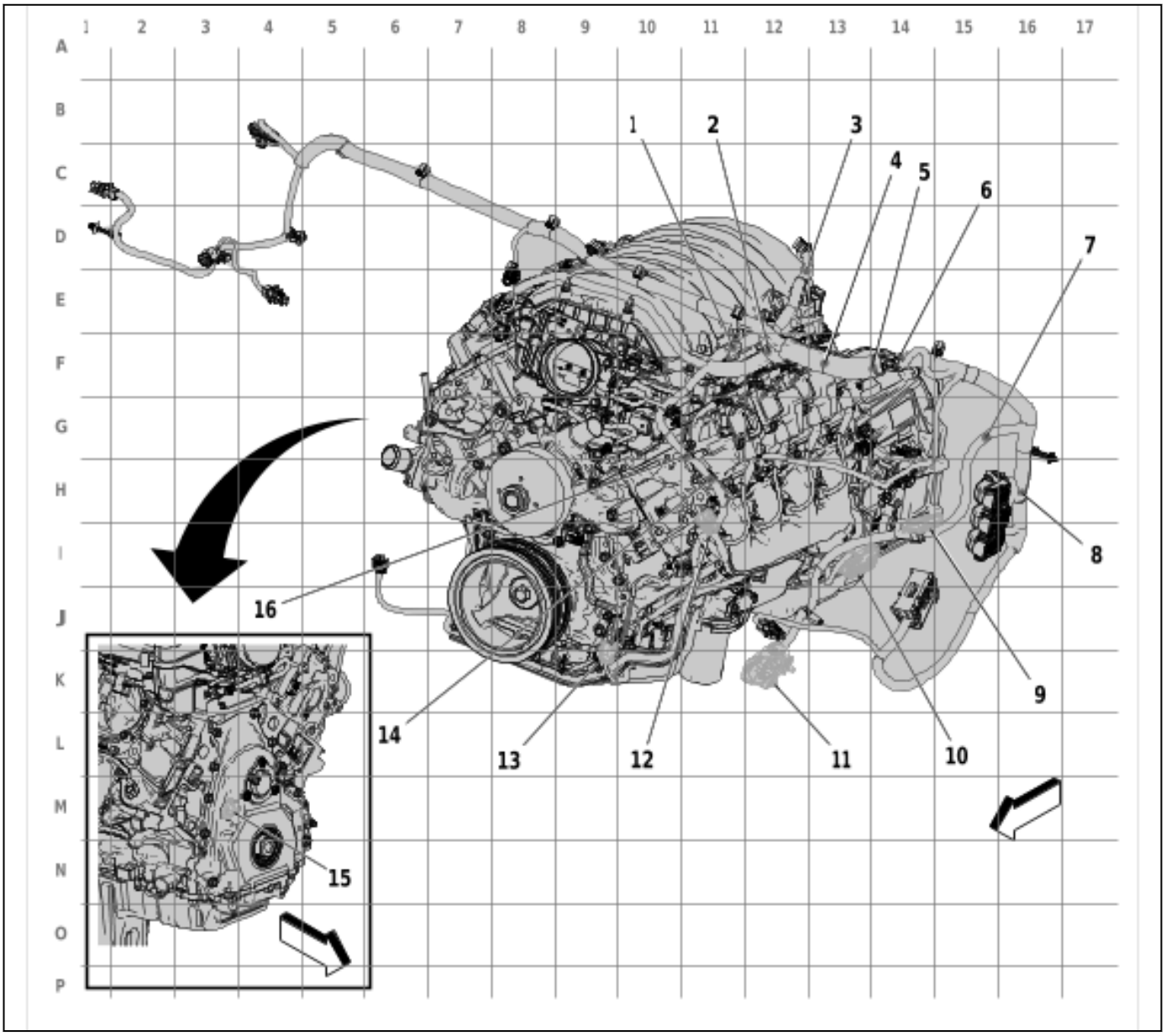

6326445

Items
(1) J101 Engine Wiring Harness
(2) J111 Engine Wiring Harness (L8T)
(3) J181 Ignition Coil Jumper Wiring Harness (L8T)
(4) J182 Left Ignition Coil Wiring Harness
(5) J115 Engine Wiring Harness
(6) J102 Engine Wiring Harness
(7) J107 Engine Wiring Harness
(8) J112 Engine Wiring Harness
(9) X202 Instrument Panel Wiring Harness to Engine Wiring Harness
(10) X101 Engine Wiring Harness to Chassis Wiring Harness

Items
(11) X100 Instrument Panel Wiring Harness to Engine Wiring Harness
(12) X155 Engine Wiring Harness to Engine Coolant Temperature Sensor Harness (L8T)
(13) X130 Engine Wiring Harness to Camshaft Position Sensor Wire
(14) J131 Engine Wiring Harness
(15) X135 Camshaft Position Sensor Wire to Oil Pump Flow Control Solenoid Valve Wire (L8T)
(16) J130 Engine Wiring Harness

Engine Harness Routing - Rear (L8T)

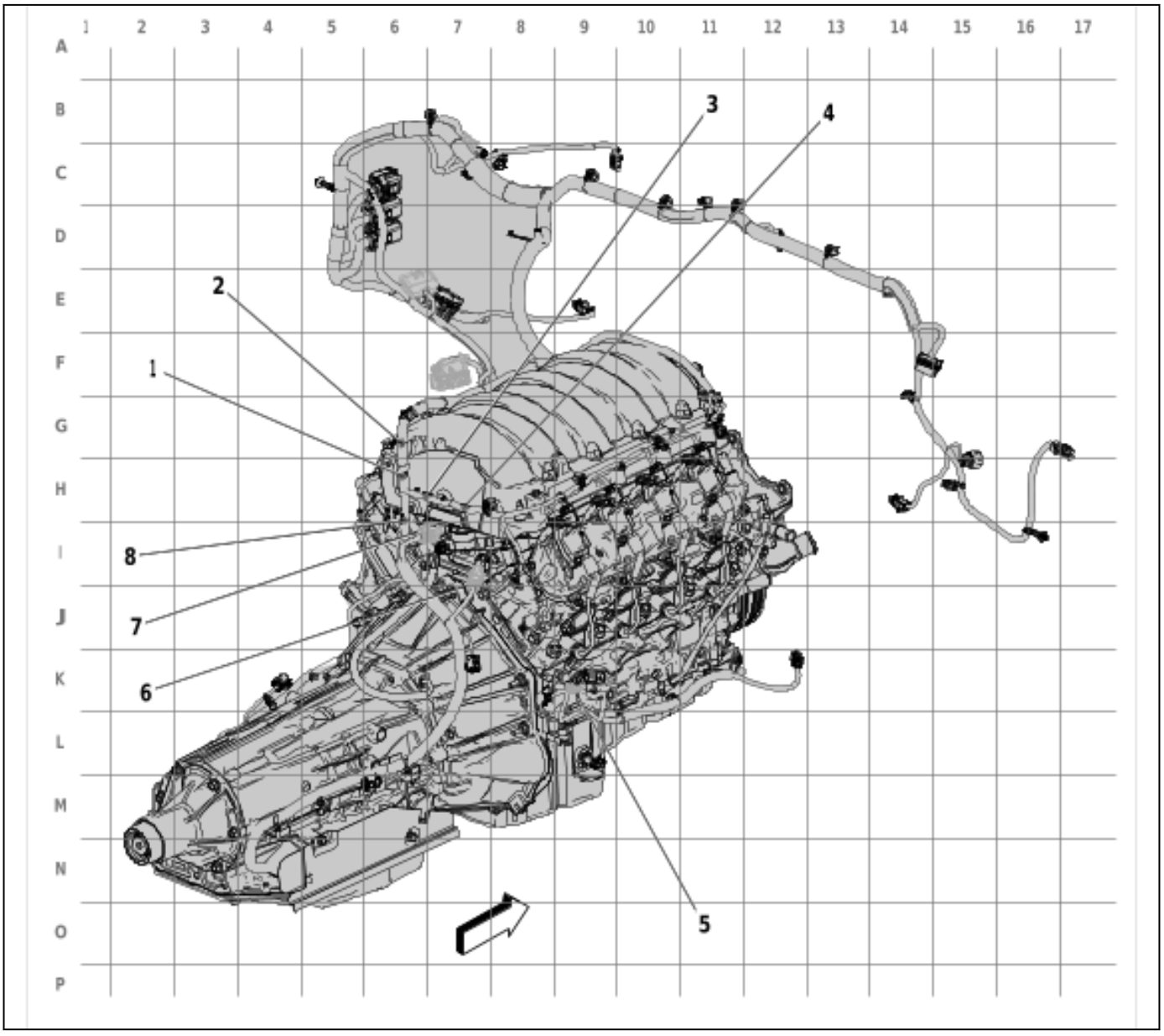

6040696

Items
(1) J143 Engine Wiring Harness
(2) J188 Right Ignition Coil Wiring Harness

Items
(3) J183 Right Ignition Coil Wiring Harness (L8T)
(4) J108 Engine Wiring Harness (L8T)
(5) X103 Engine Wiring Harness to Starter Motor Jumper Wiring Harness
(6) X161 Engine Wiring Harness to Fuel Injector Wiring Harness (LV1/L8T)
(7) X160 Engine Wiring Harness to Fuel Injector Wiring Harness (LV1/L8T)
(8) J144 Engine Wiring Harness

Engine Harness Routing - Front (LV1)

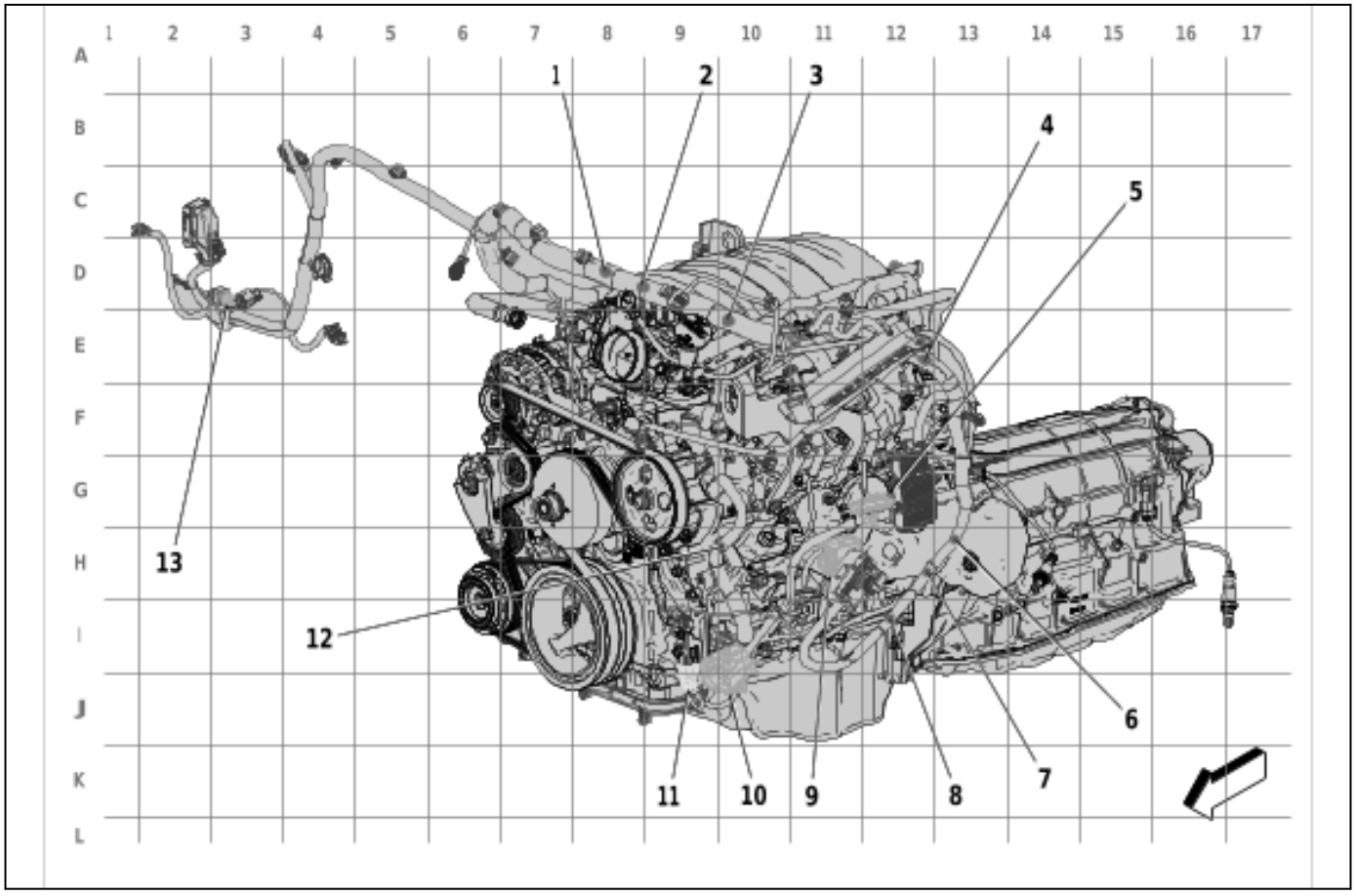

6537601

Items
(1) J188 Right Ignition Coil Wiring Harness
(2) J112 Engine Wiring Harness
(3) J182 Left Ignition Coil Wiring Harness
(4) J115 Engine Wiring Harness
(5) X102 Chassis Wiring Harness to Fuel Tank Wiring Harness
(6) J185 Right Ignition Coil Wiring Harness (LV1)
(7) J184 Left Ignition Coil Wiring Harness (LV1)
(8) J107 Engine Wiring Harness
(9) X101 Engine Wiring Harness to Chassis Wiring Harness

Items
(10) X100 Instrument Panel Wiring Harness to Engine Wiring Harness
(11) X130 Engine Wiring Harness to Camshaft Position Sensor Wire
(12) J101 Engine Wiring Harness
(13) R6A Terminating Resistor - High Speed Bus

Engine Harness Routing - Front (L8T)

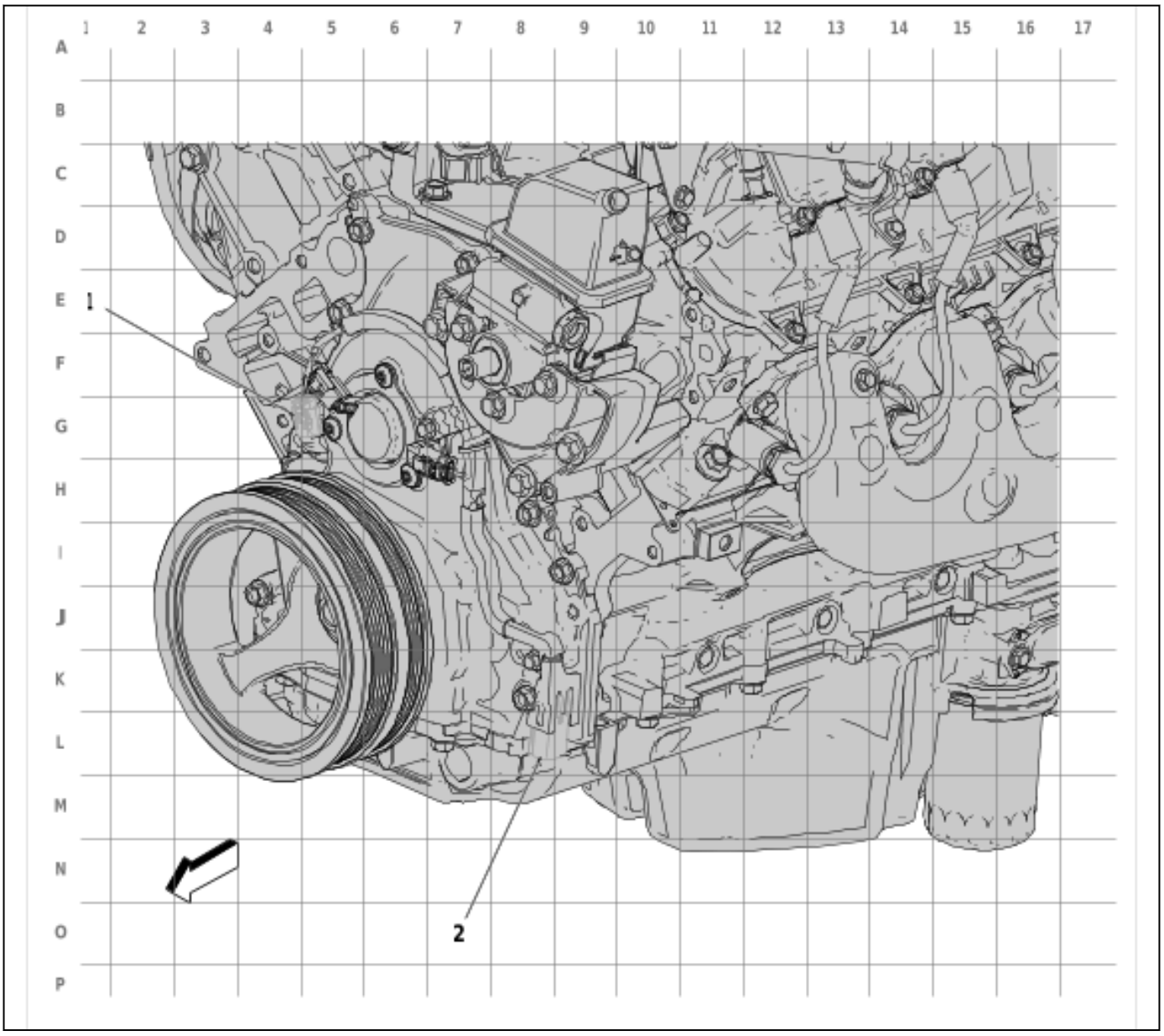

6991626

Items
(1) X135 Camshaft Position Sensor Wire to Oil Pump Flow Control Solenoid Valve Wire (L8T)
(2) X130 Engine Wiring Harness to Camshaft Position Sensor Wire

Engine Harness Routing - Rear (LV1)

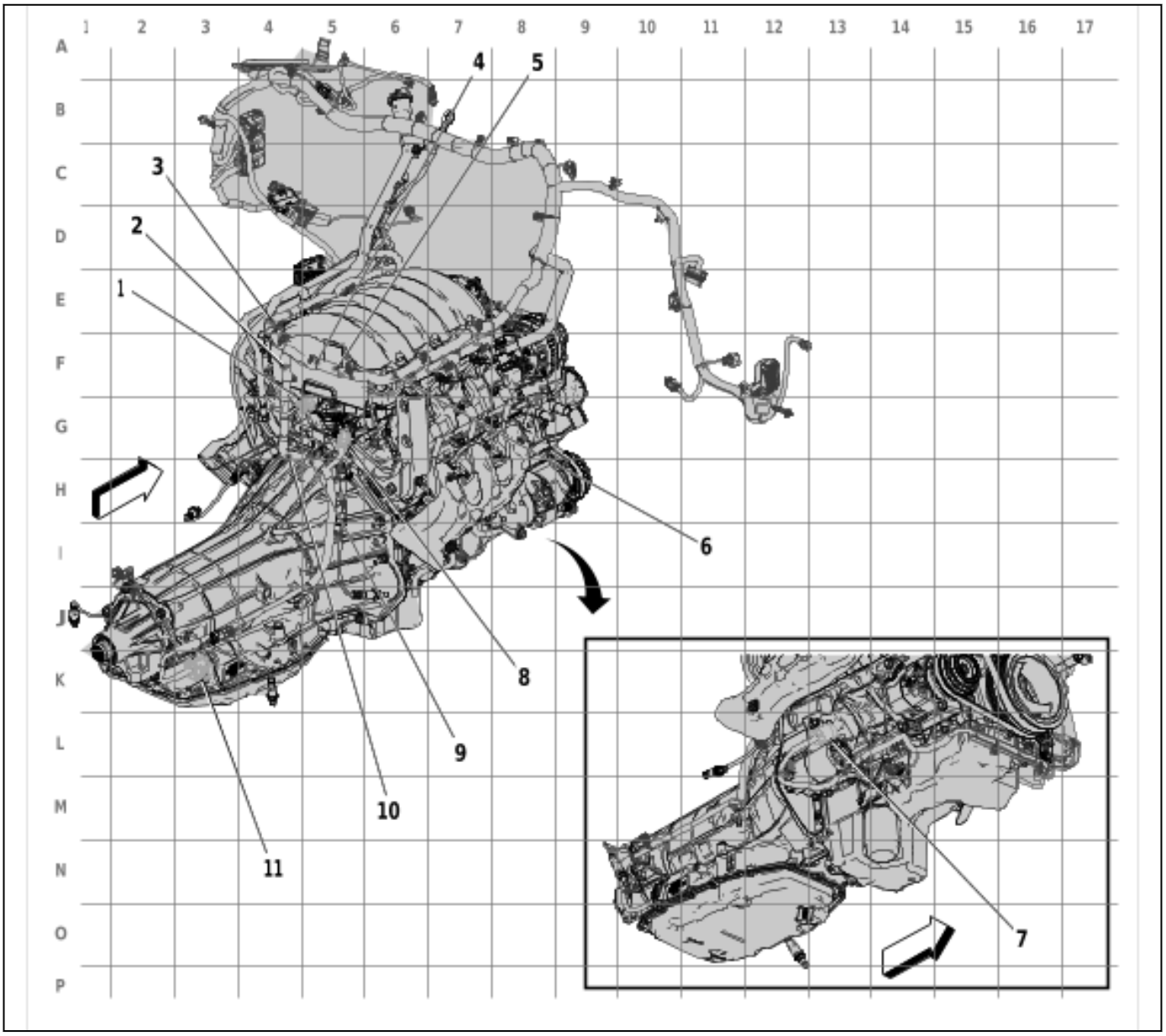

6003043

Items
(1) X160 Engine Wiring Harness to Fuel Injector Wiring Harness (LV1/L8T)
(2) J143 Engine Wiring Harness
(3) J131 Engine Wiring Harness
(4) J170 Engine Wiring Harness (LV1)
(5) J171 Engine Wiring Harness (LV1)
(6) J102 Engine Wiring Harness
(7) X103 Engine Wiring Harness to Starter Motor Jumper Wiring Harness
(8) X161 Engine Wiring Harness to Fuel Injector Wiring Harness (LV1/L8T)
(9) J130 Engine Wiring Harness

Items
(10) J144 Engine Wiring Harness
(11) X175 Engine Wiring Harness to Automatic Transmission Wiring Harness (LV1/L8T)

Fuel Injector Harness Routing (LV1)

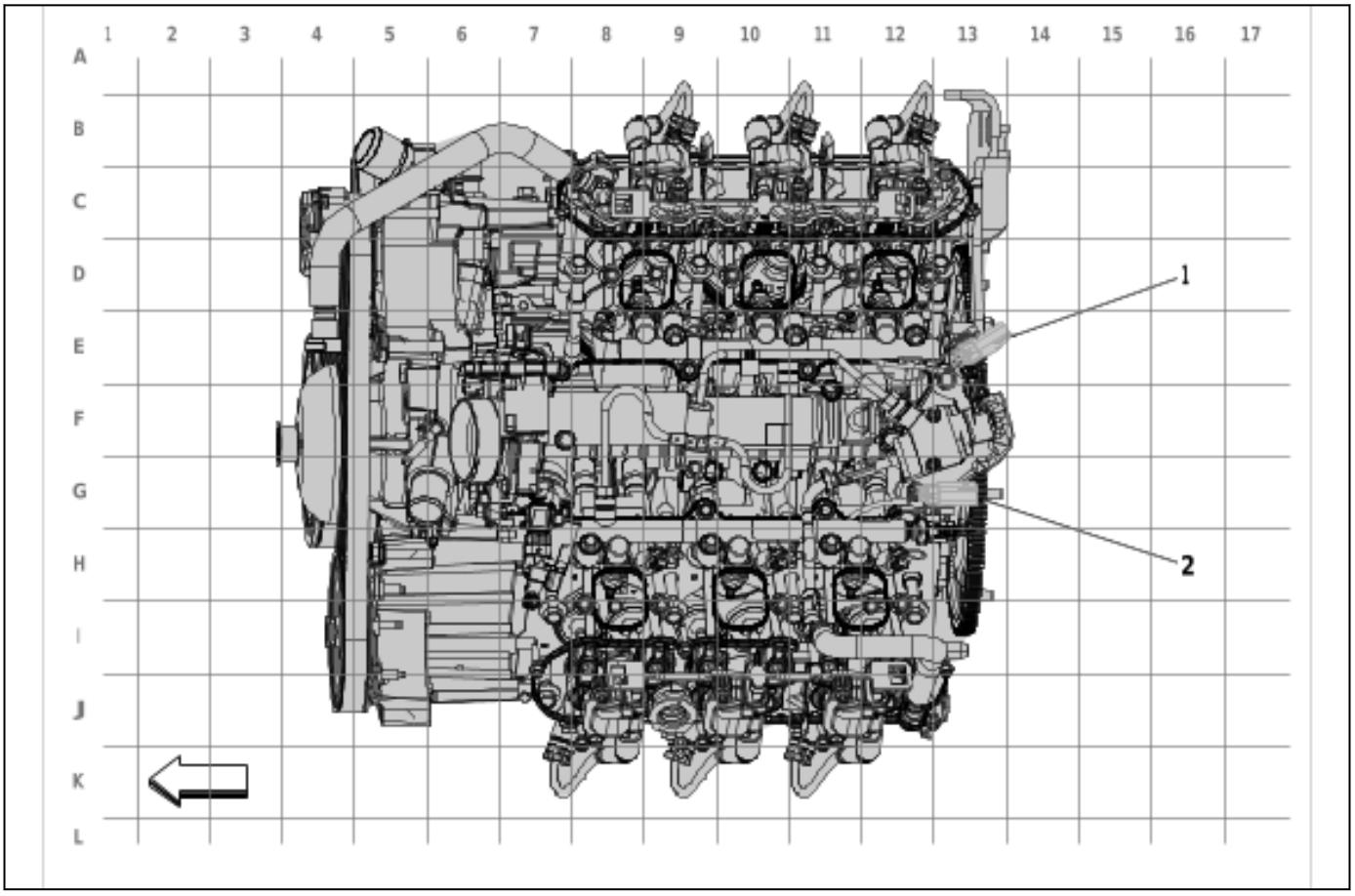

4861805

Items
(1) X161 Engine Wiring Harness to Fuel Injector Wiring Harness (LV1/L8T)
(2) X160 Engine Wiring Harness to Fuel Injector Wiring Harness (LV1/L8T)

Instrument Panel Harness Routing - Engine Compartment

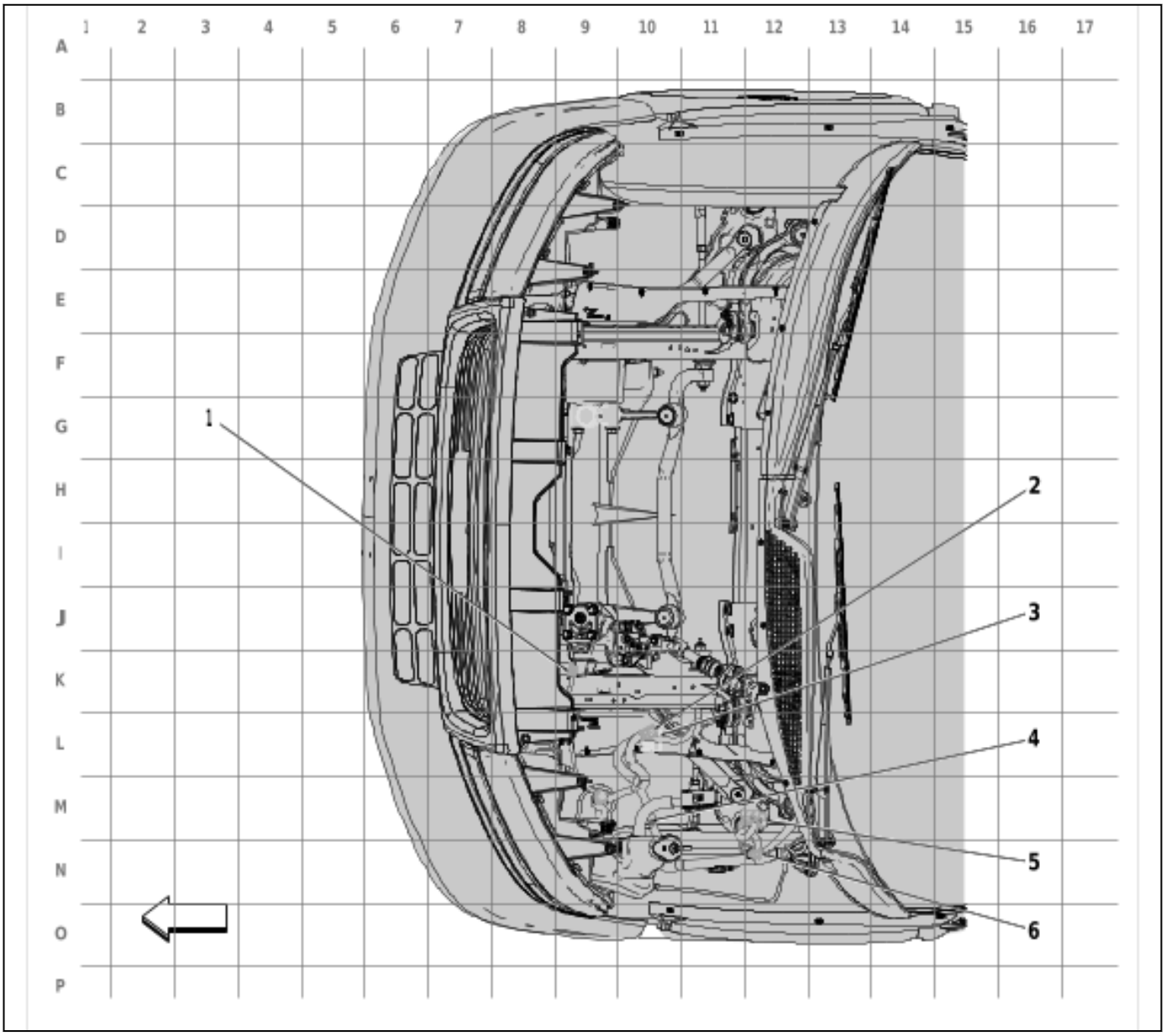

6040698

Items
(1) X104 Instrument Panel Wiring Harness to Front Seat Wiring Harness
(2) X185 Instrument Panel Wiring Harness to Chassis Wiring Harness
(3) X100 Instrument Panel Wiring Harness to Engine Wiring Harness
(4) J211 Instrument Panel Wiring Harness (UD7/UFT)
(5) X202 Instrument Panel Wiring Harness to Engine Wiring Harness
(6) X141 Instrument Panel Wiring Harness to Brake Fluid Level Indicator Wiring Harness (UJ1)

Instrument Panel Harness Routing - Rear of Instrument Panel

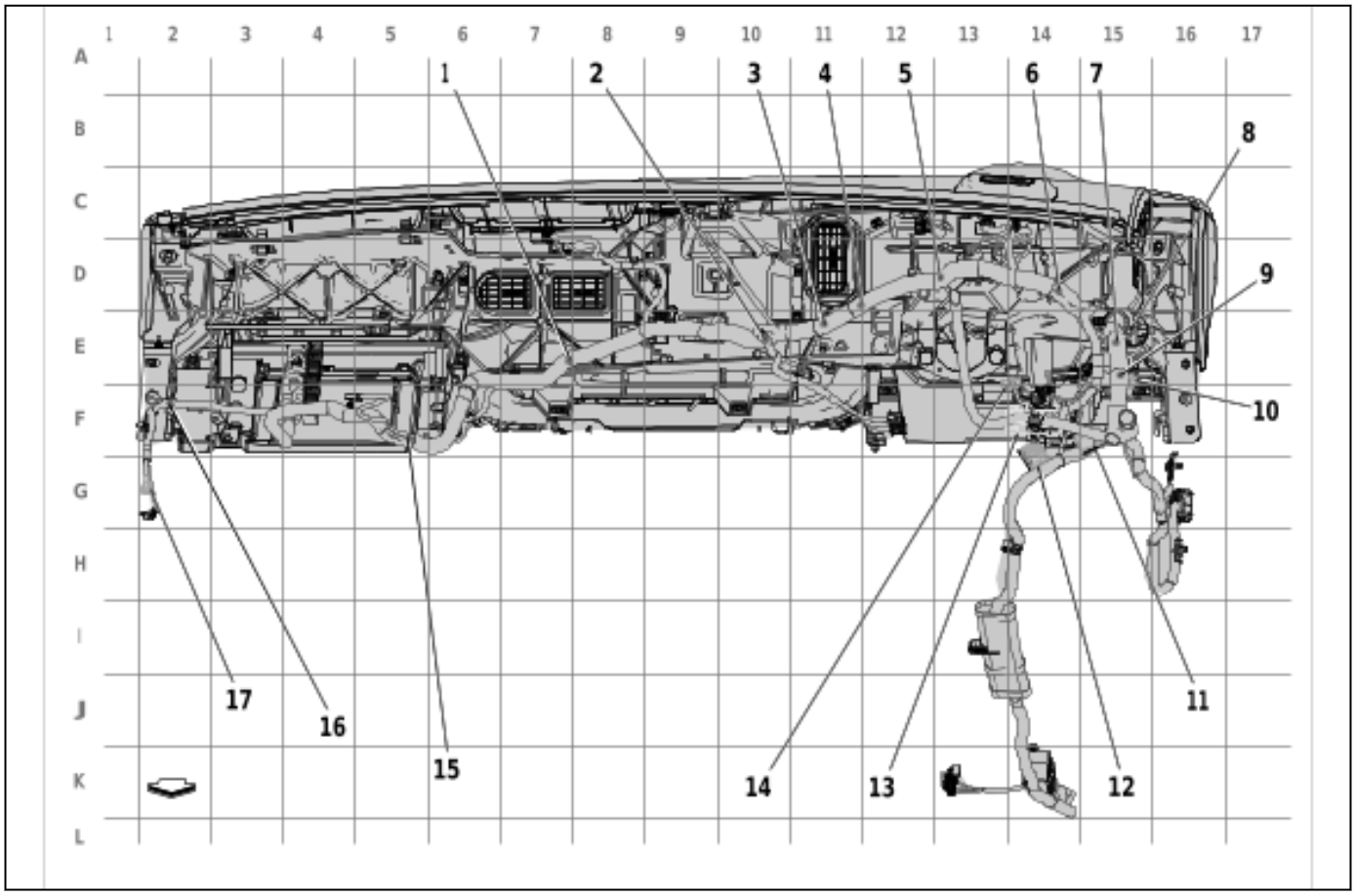

6505750

Items
(1) J241 Instrument Panel Wiring Harness
(2) J271 Instrument Panel Wiring Harness (U2K/UE1)
(3) J245 Instrument Panel Wiring Harness (DE5)
(4) J246 Instrument Panel Wiring Harness (DE5)
(5) J207 Instrument Panel Wiring Harness
(6) J248 Instrument Panel Wiring Harness
(7) J263 Instrument Panel Wiring Harness (TP3)
(8) J244 Instrument Panel Wiring Harness
(9) J247 Instrument Panel Wiring Harness
(10) X206 Instrument Panel Wiring Harness to Instrument Panel Wiring Harness
(11) JX200 Instrument Panel Wiring Harness
(12) JX250 Instrument Panel Wiring Harness
(13) X200 Steering Wheel Air Bag Coil Jumper Wiring Harness to Instrument Panel Wiring Harness
(14) X225 Accelerator Control Wiring Harness to Instrument Panel Wiring Harness
(15) J250 Instrument Panel Wiring Harness
(16) J249 Instrument Panel Wiring Harness
(17) X221 Instrument Panel Wiring Harness to Antenna Wiring Harness

Instrument Panel Harness Routing - Driver Side

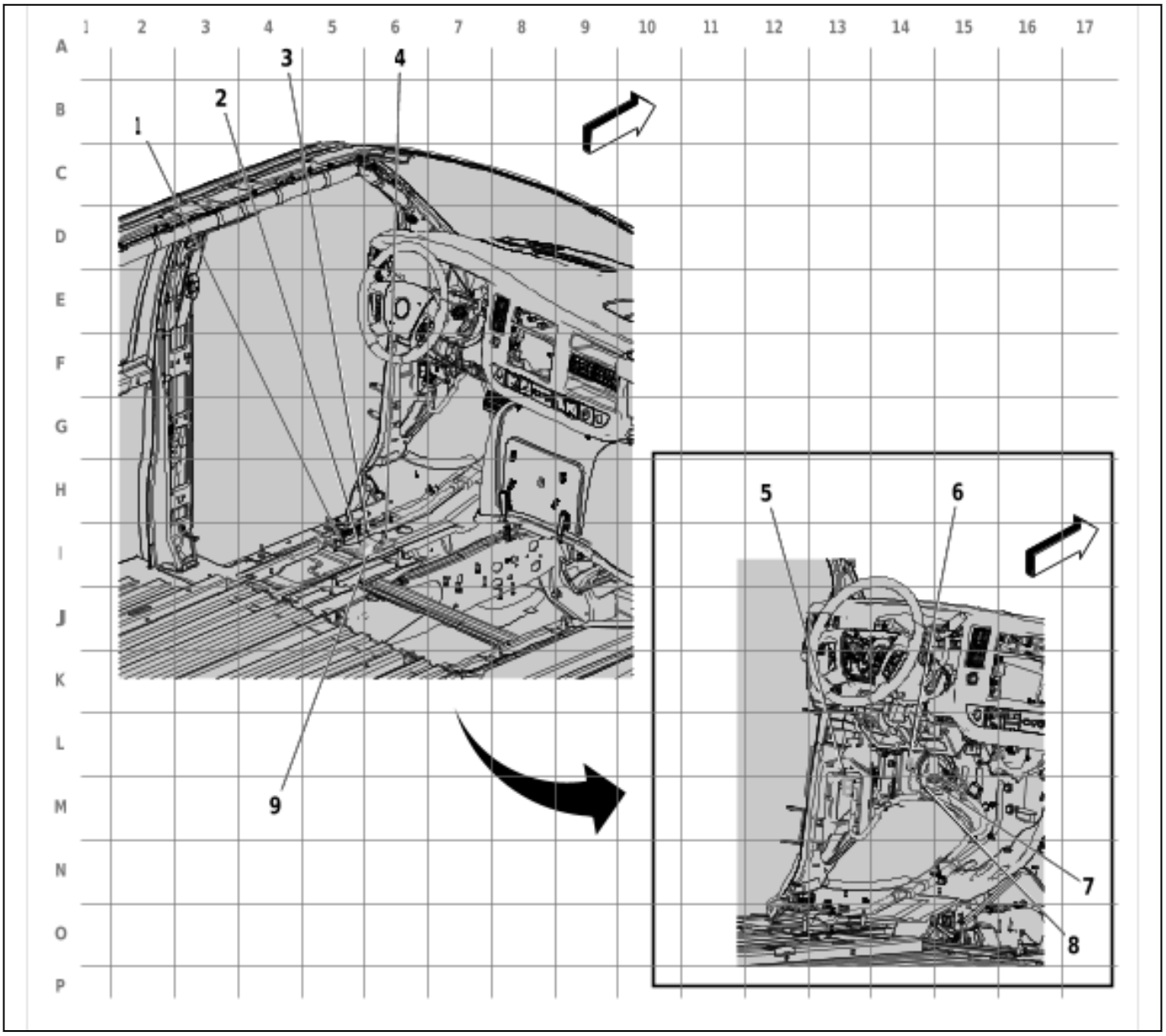

6040701

Items
(1) J223 Instrument Panel Wiring Harness (UVC)
(2) X331 Instrument Panel Wiring Harness to Body Wiring Harness
(3) J280 Instrument Panel Wiring Harness (Cutaway)
(4) X329 Instrument Panel Wiring Harness to Body Wiring Harness (UVC)
(5) X318 Instrument Panel Wiring Harness to Body Wiring Harness
(6) X220 Instrument Panel Wiring Harness to Park Brake Switch Jumper Wiring Harness
(7) W8 Blunt Cut - Trailer Provision
(8) J201 Instrument Panel Wiring Harness (UFL)
(9) X330 Instrument Panel Wiring Harness to Body Wiring Harness

Steering Column Harness Routing

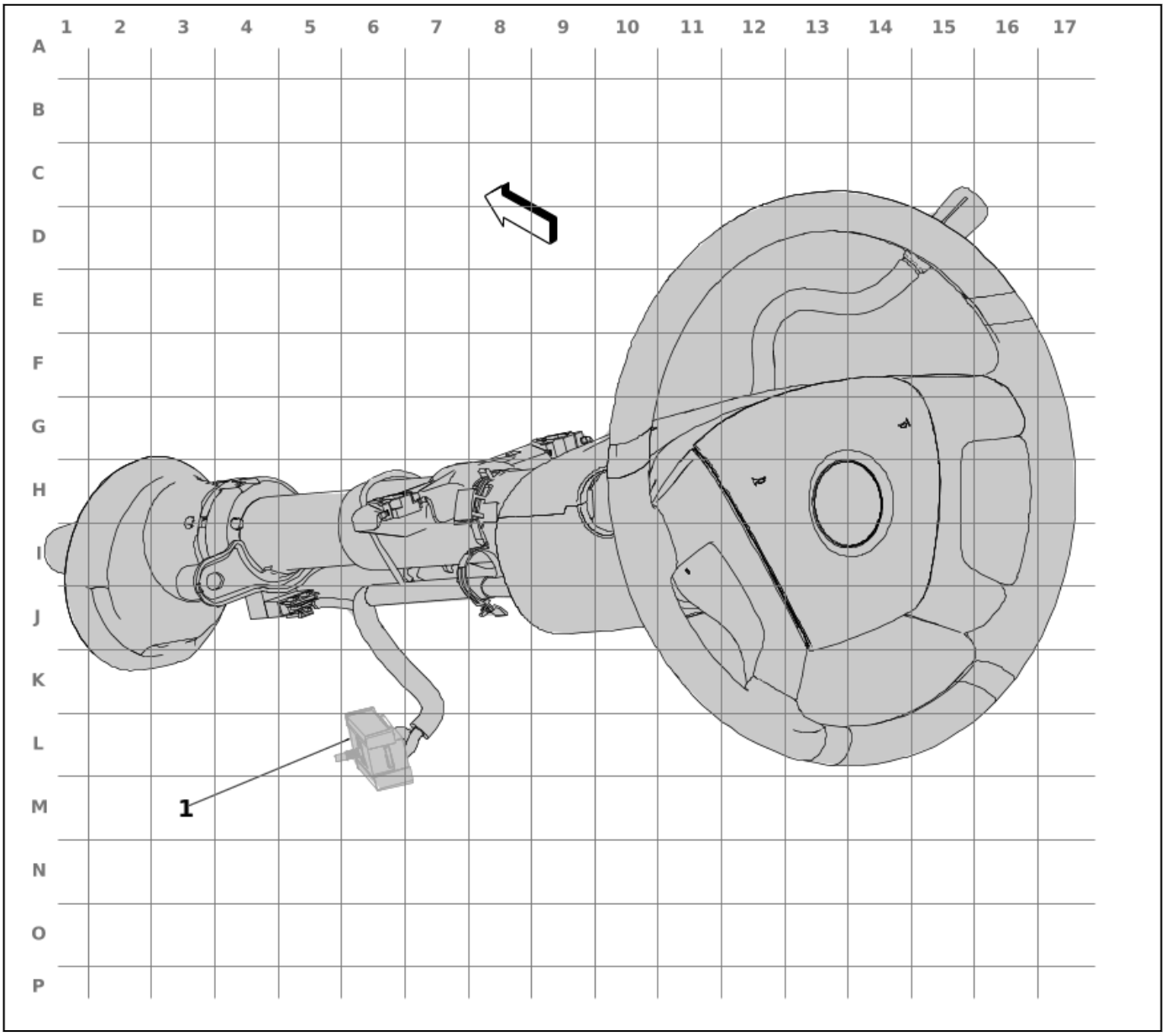

4004323

Items
(1) X200 Steering Wheel Air Bag Coil Jumper Wiring Harness to Instrument Panel Wiring Harness

Driver Seat Harness Routing and Front Passenger Seat Harness Routing

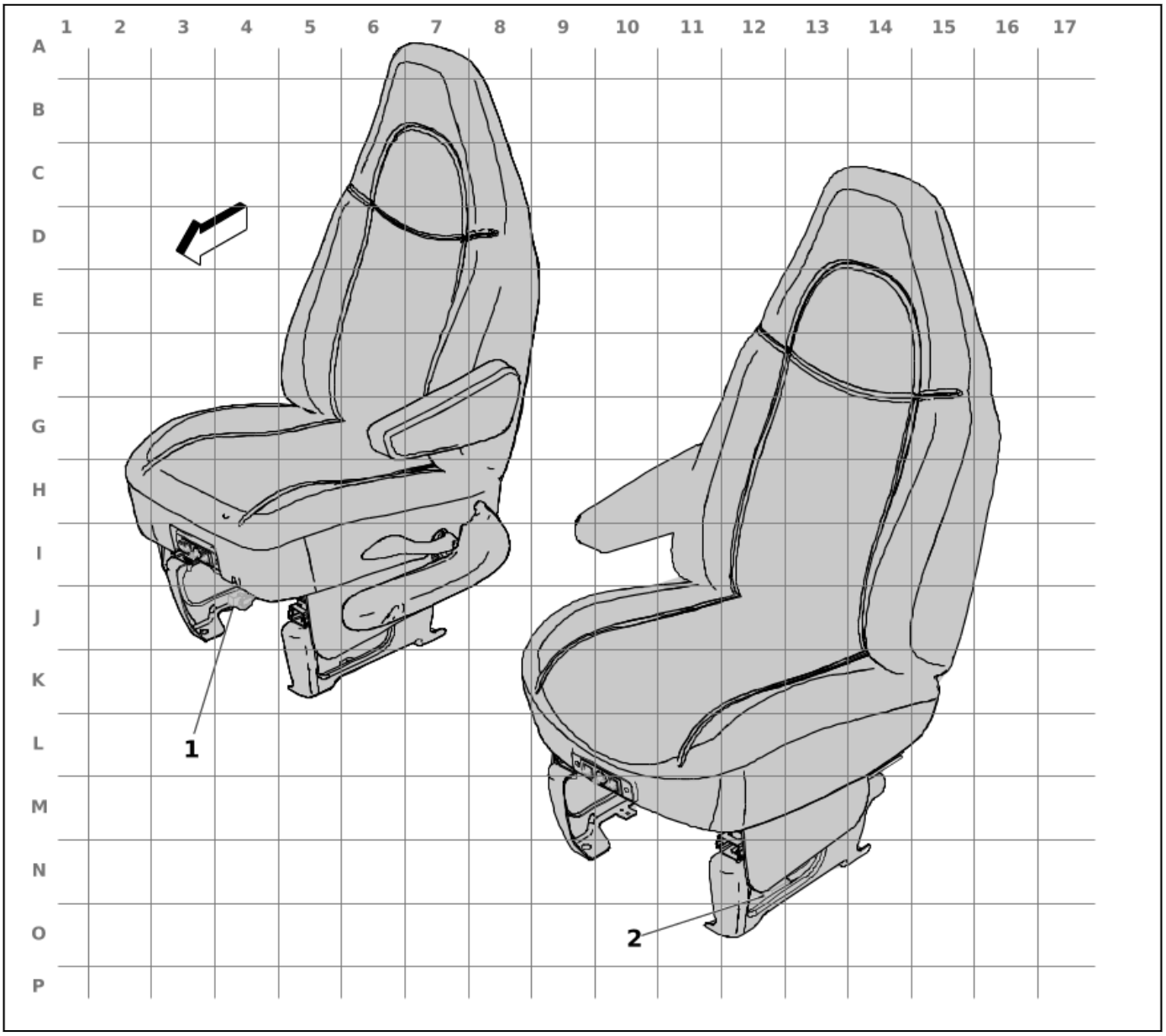

2830793

Items
(1) X306 Body Wiring Harness to Seat Wiring Harness - Passenger
(2) X307 Body Wiring Harness to Seat Wiring Harness - Driver

Body Harness Routing - Left Front Passenger Compartment - Passenger

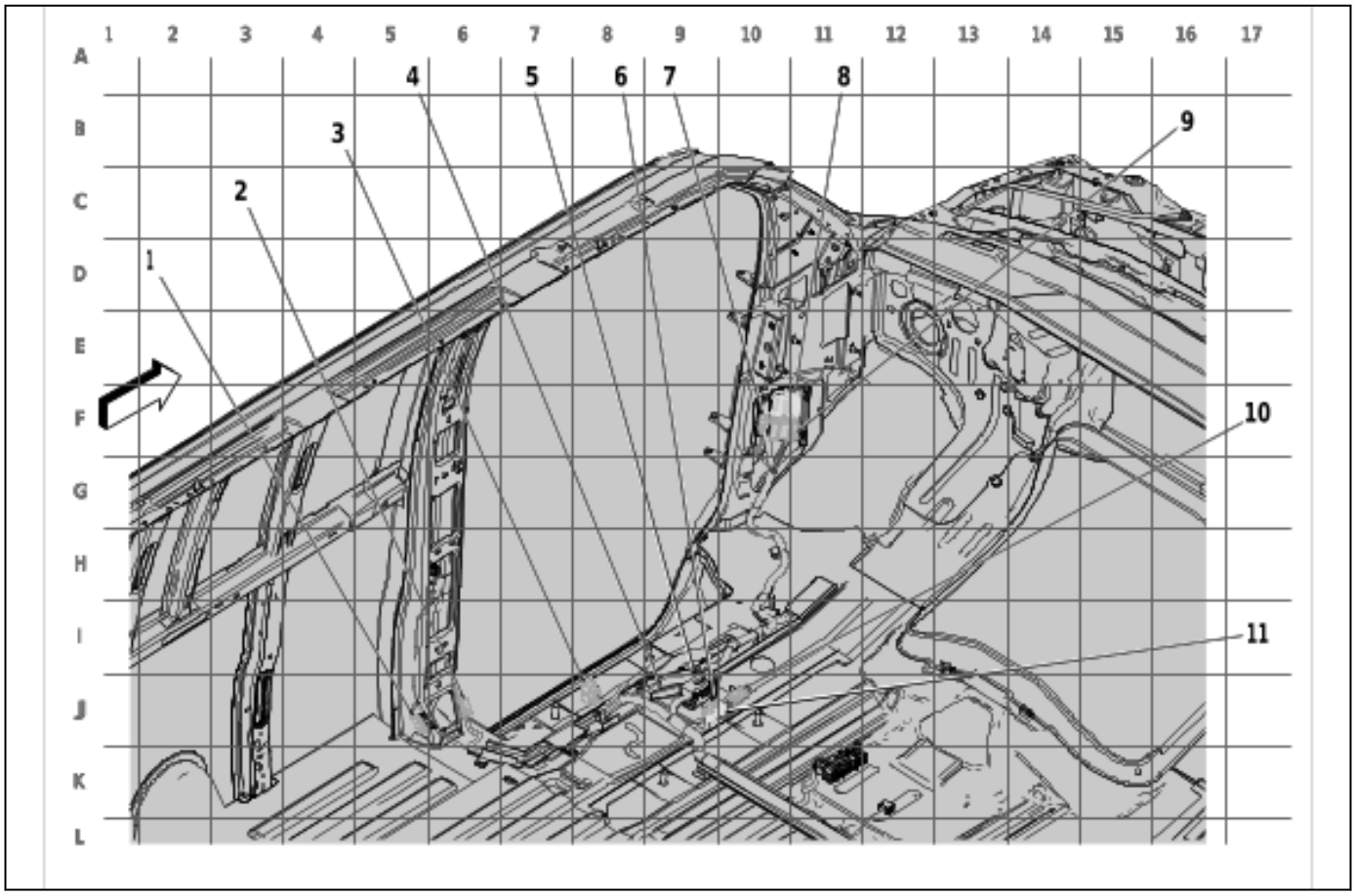

6193603

Items
(1) X323 Airbag Wiring Harness to Body Wiring Harness (ASF)
(2) JX347 Body Wiring Harness
(3) X307 Body Wiring Harness to Seat Wiring Harness - Driver
(4) J357 Body Wiring Harness
(5) J356 Body Wiring Harness
(6) X331 Instrument Panel Wiring Harness to Body Wiring Harness
(7) X319 Auxiliary Heater Front Wiring Harness to Body Wiring Harness (ENC/C69/C36)
(8) X318 Instrument Panel Wiring Harness to Body Wiring Harness
(9) X500 Front Side Door Door Wiring Harness - Driver to Body Wiring Harness
(10) X329 Instrument Panel Wiring Harness to Body Wiring Harness (UVC)
(11) X330 Instrument Panel Wiring Harness to Body Wiring Harness

Body Harness Routing - Left Front Passenger Compartment - Cargo

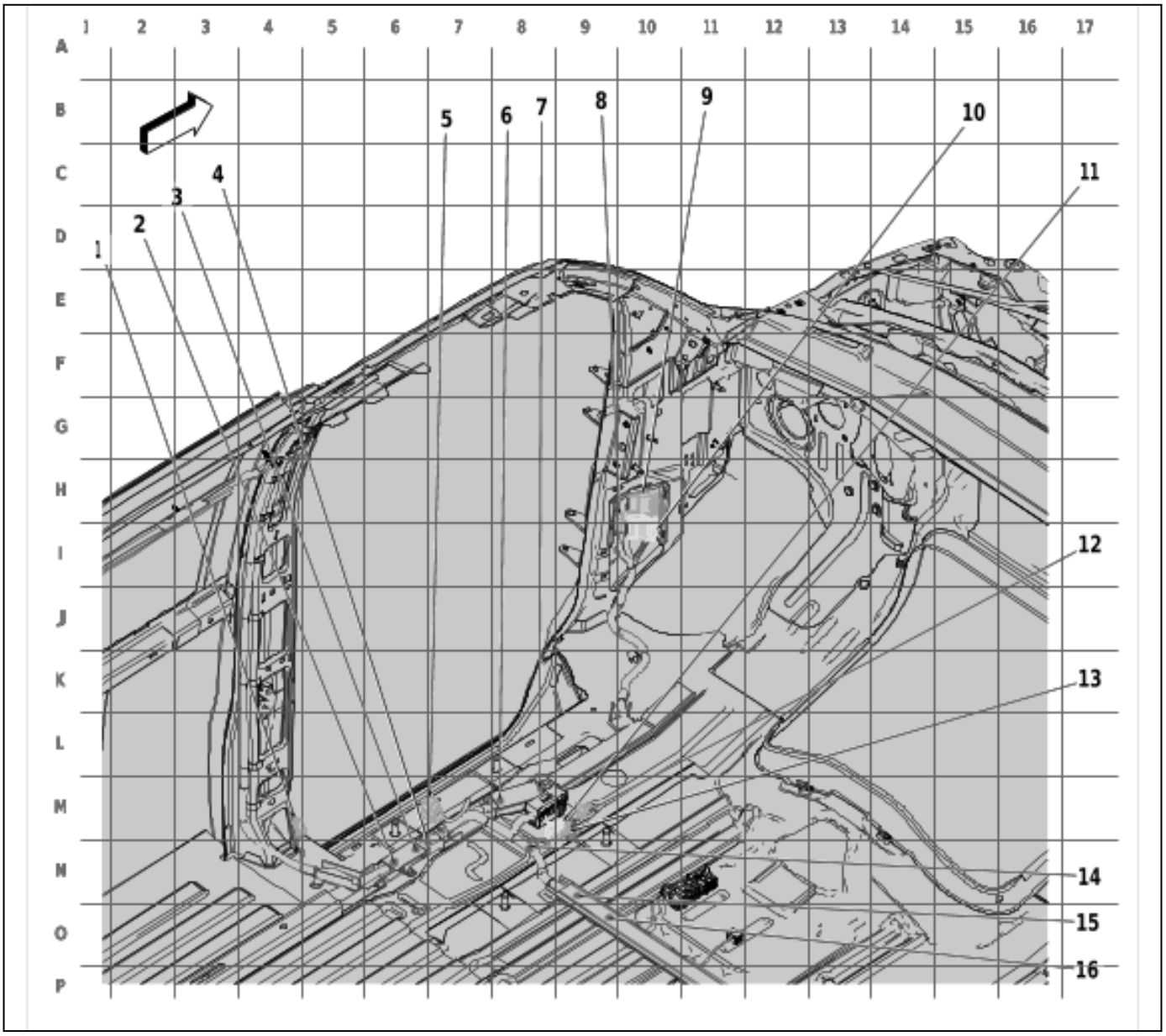

6193604

Items
(1) JX347 Body Wiring Harness
(2) J308 Body Wiring Harness (C69)
(3) J310 Body Wiring Harness (C69)
(4) J311 Body Wiring Harness (C69)
(5) X307 Body Wiring Harness to Seat Wiring Harness - Driver
(6) J357 Body Wiring Harness
(7) J356 Body Wiring Harness
(8) X319 Auxiliary Heater Front Wiring Harness to Body Wiring Harness (ENC/C69/C36)
(9) X318 Instrument Panel Wiring Harness to Body Wiring Harness
(10) X500 Front Side Door Door Wiring Harness - Driver to Body Wiring Harness

Items
(11) X331 Instrument Panel Wiring Harness to Body Wiring Harness
(12) X329 Instrument Panel Wiring Harness to Body Wiring Harness (UVC)
(13) X330 Instrument Panel Wiring Harness to Body Wiring Harness
(14) J334 Body Wiring Harness (UVC)
(15) J322 Body Wiring Harness (Cargo/Passenger + AU3)
(16) J323 Body Wiring Harness (Cargo/Passenger + AU3)

Body Harness Routing - Left Front Passenger Compartment - Cutaway

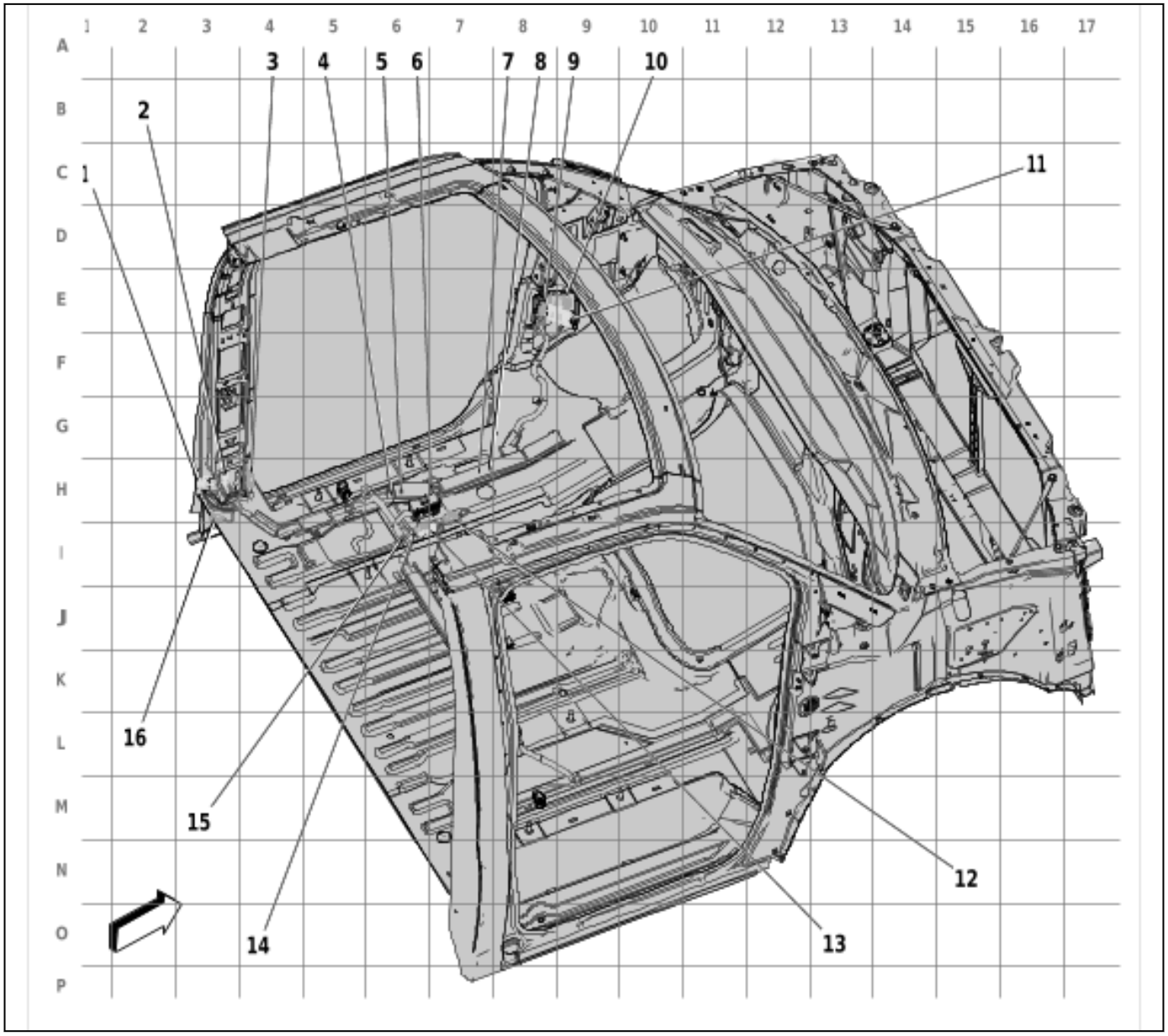

6596255

Items
(1) W22 Blunt Cut - Rear Speaker Provision
(2) X407 Auxiliary Heater and Air Conditioning Wiring Harness to Body Wiring Harness

Items
(3) JX347 Body Wiring Harness
(4) J311 Body Wiring Harness (C69)
(5) J310 Body Wiring Harness (C69)
(6) J308 Body Wiring Harness (C69)
(7) J357 Body Wiring Harness
(8) J355 Front Headliner Wiring Harness (C69)
(9) X319 Auxiliary Heater Front Wiring Harness to Body Wiring Harness (ENC/C69/C36)
(10) X318 Instrument Panel Wiring Harness to Body Wiring Harness
(11) X500 Front Side Door Door Wiring Harness - Driver to Body Wiring Harness
(12) X329 Instrument Panel Wiring Harness to Body Wiring Harness (UVC)
(13) X330 Instrument Panel Wiring Harness to Body Wiring Harness
(14) X331 Instrument Panel Wiring Harness to Body Wiring Harness
(15) J334 Body Wiring Harness (UVC)
(16) X403 Rear Door Door Wiring Harness to Body Wiring Harness

Body Harness Routing - Left Rear Passenger Compartment - Passenger

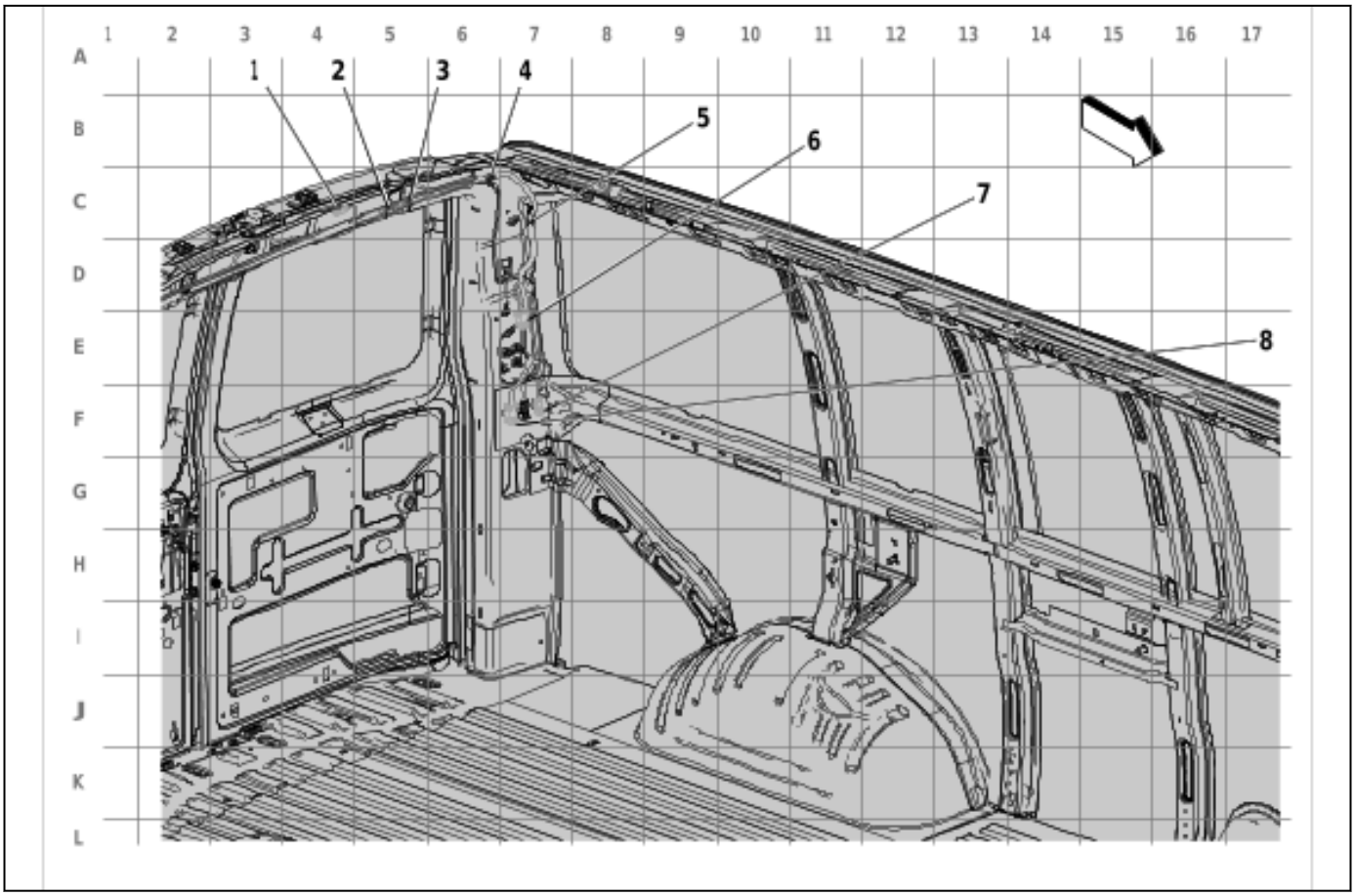

6594015

Items
(1) X419 Front Side Door Door Wiring Harness - Driver to Body Wiring Harness (Passenger/Cargo)
(2) J452 Body Wiring Harness
(3) J453 Body Wiring Harness
(4) J410 Body Wiring Harness (Cargo/Passenger)
(5) J401 Body Wiring Harness (C36/C49/C69)
(6) X410 Tail Lamp Wiring Harness to Body Wiring Harness (Passenger/Cargo)
(7) X407 Auxiliary Heater and Air Conditioning Wiring Harness to Body Wiring Harness
(8) X411 Rear Door Door Wiring Harness - Left to Body Wiring Harness (Passenger/Cargo)

Body Harness Routing - Left Rear Passenger Compartment - Cargo

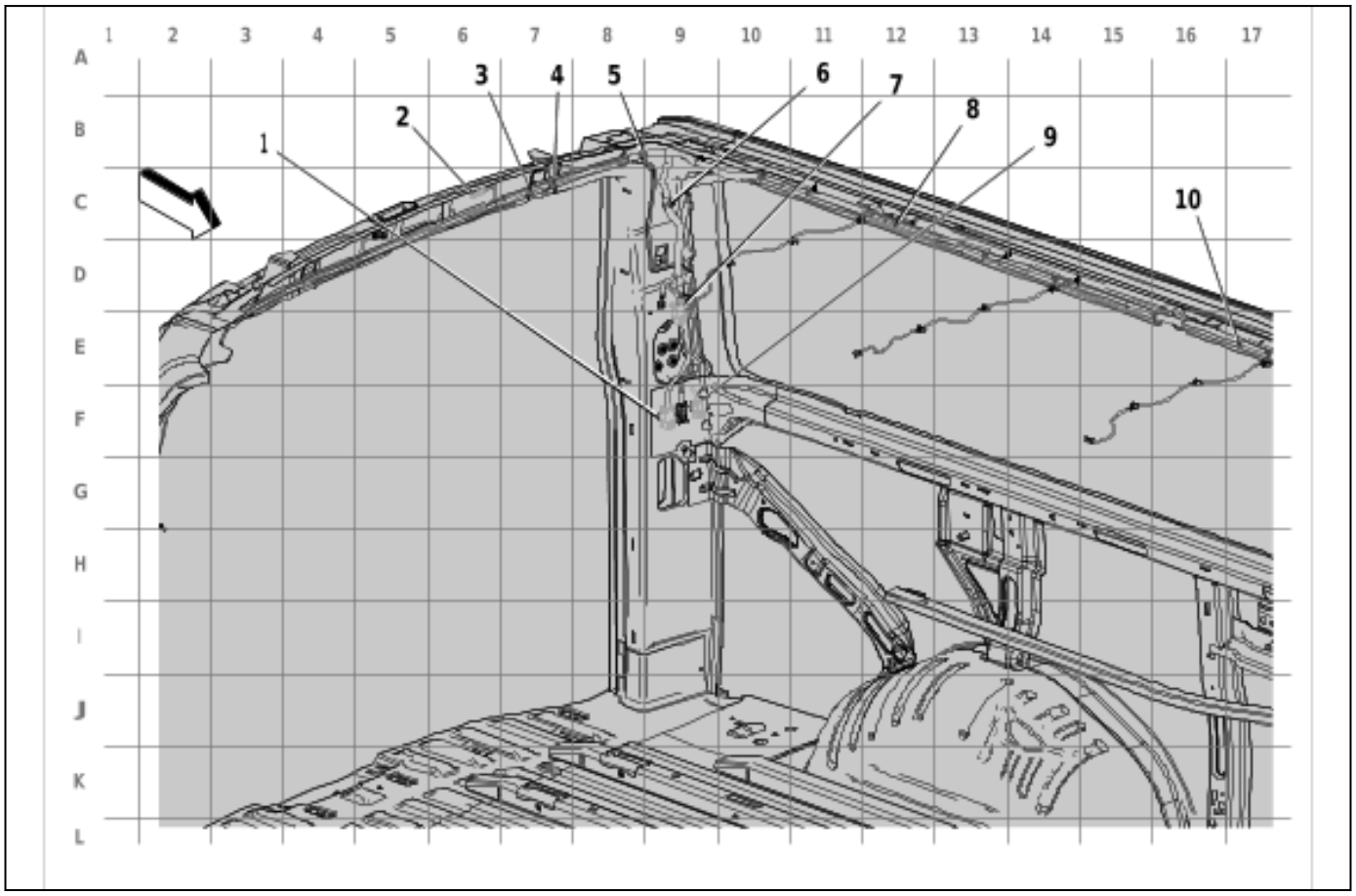

6594016

Items
(1) X411 Rear Door Door Wiring Harness - Left to Body Wiring Harness (Passenger/Cargo)
(2) X419 Front Side Door Door Wiring Harness - Driver to Body Wiring Harness (Passenger/Cargo)
(3) J453 Body Wiring Harness
(4) J452 Body Wiring Harness
(5) J410 Body Wiring Harness (Cargo/Passenger)
(6) J401 Body Wiring Harness (C36/C49/C69)

Items
(7) X410 Tail Lamp Wiring Harness to Body Wiring Harness (Passenger/Cargo)
(8) J375 Body Wiring Harness (Cargo)
(9) X407 Auxiliary Heater and Air Conditioning Wiring Harness to Body Wiring Harness
(10) J374 Body Wiring Harness (Cargo)

Body Harness Routing - Right Front Passenger Compartment

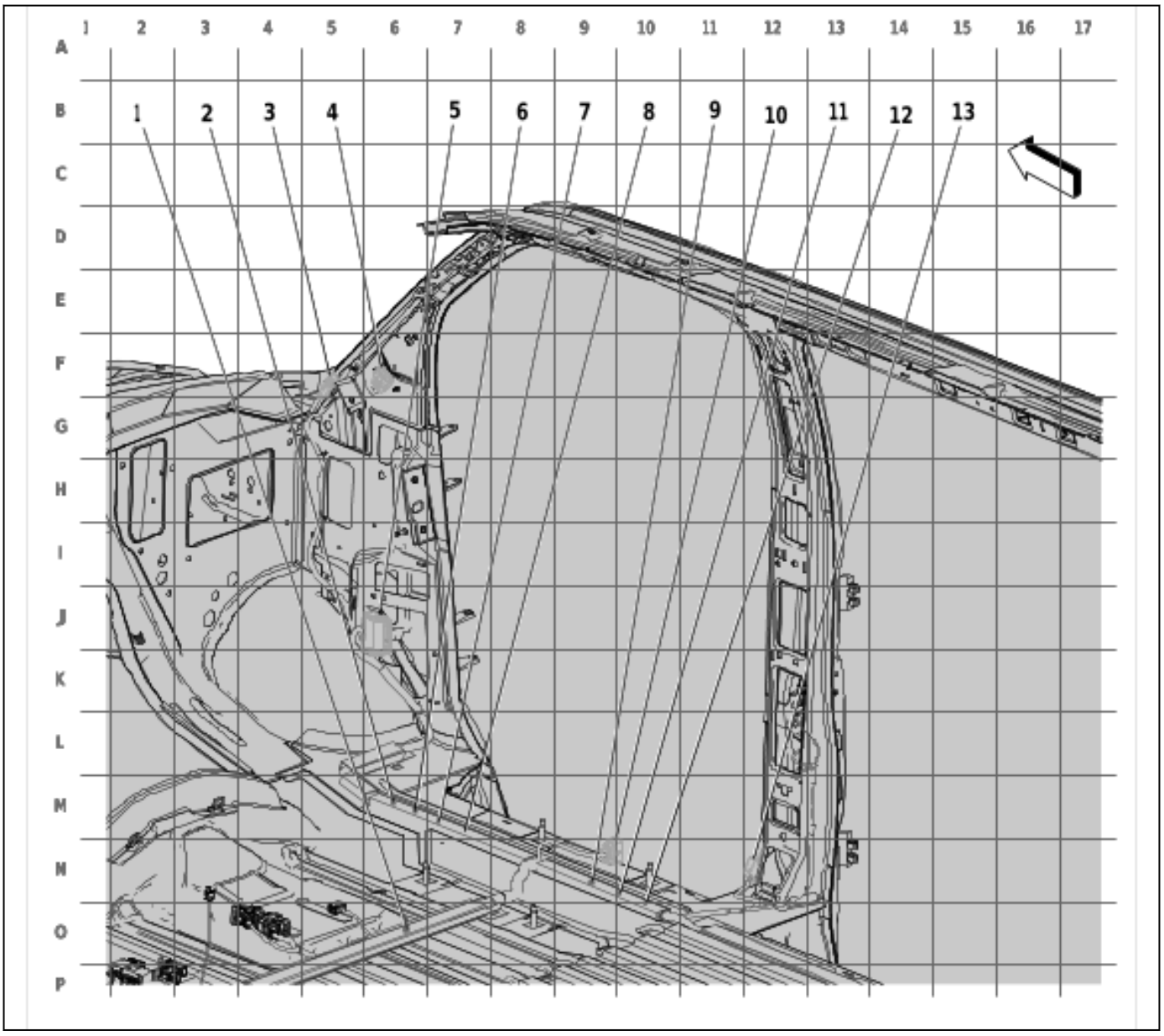

6193607

Items
(1) J359 Body Wiring Harness (U80)
(2) J323 Body Wiring Harness (Cargo/Passenger + AU3)
(3) X205 Roof Console Wiring Harness to Body Wiring Harness
(4) X204 Body Wiring Harness to Roof Console Wiring Harness

Items
(5) X600 Front Side Door Door Wiring Harness - Passenger to Body Wiring Harness
(6) J322 Body Wiring Harness (Cargo/Passenger + AU3)
(7) J308 Body Wiring Harness (C69)
(8) J334 Body Wiring Harness (UVC)
(9) J311 Body Wiring Harness (C69)
(10) X306 Body Wiring Harness to Seat Wiring Harness - Passenger
(11) J310 Body Wiring Harness (C69)
(12) J331 Body Wiring Harness (Passenger)
(13) JX348 Body Wiring Harness

Body Harness Routing - Right Rear Passenger Compartment - Cargo

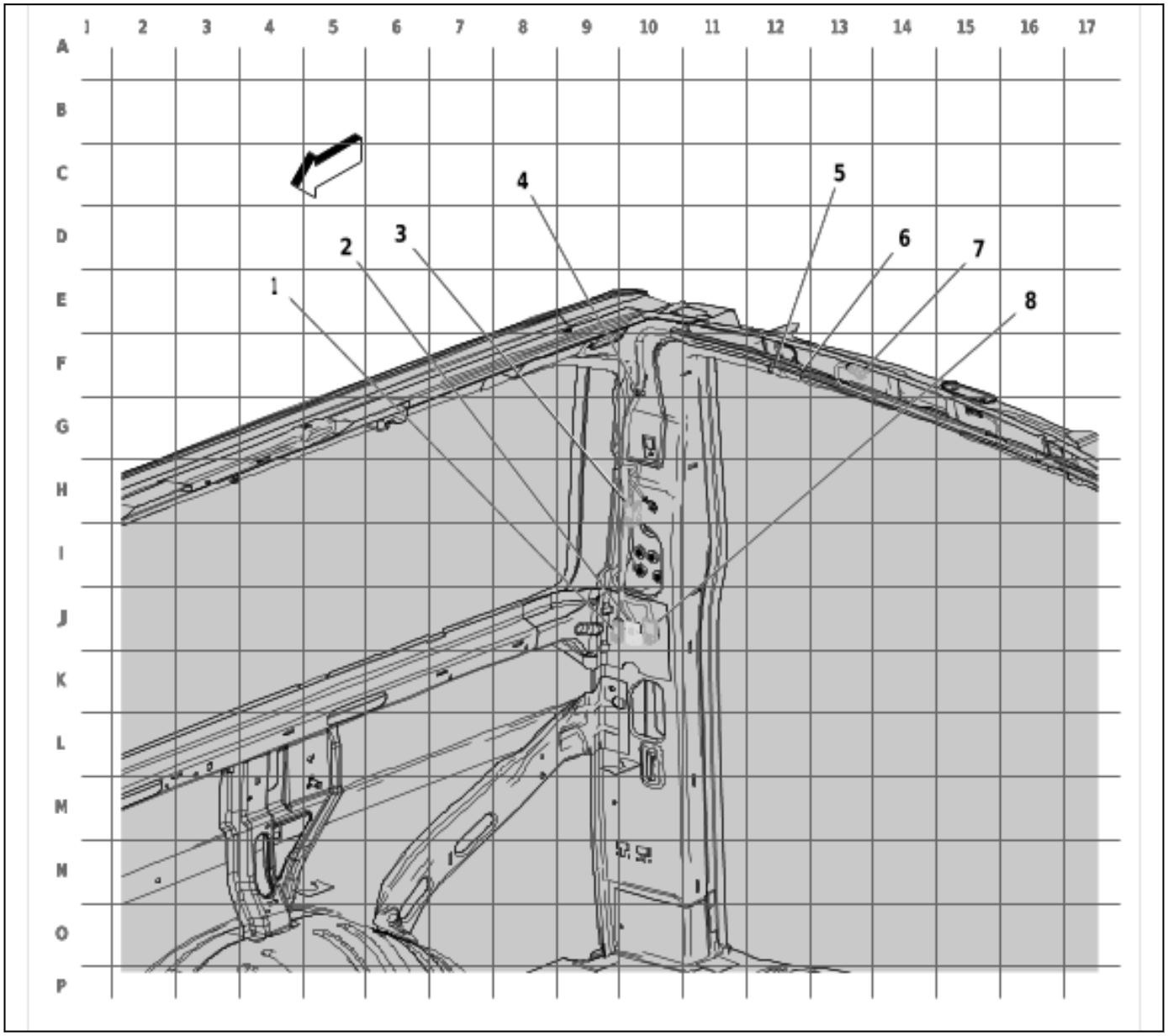

6193608

Items
(1) X403 Rear Door Door Wiring Harness to Body Wiring Harness
(2) X400 Rear Door Door Wiring Harness to Body Wiring Harness (Passenger/Cargo)
(3) X420 Tail Lamp Wiring Harness to Body Wiring Harness (Passenger/Cargo)
(4) J403 Body Wiring Harness (Cargo/Passenger)
(5) J451 Body Wiring Harness
(6) J450 Body Wiring Harness
(7) X415 Radio Rear Speaker Wiring Harness to Body Wiring Harness (Passenger/Cargo)
(8) X412 Rear Door Door Wiring Harness to Body Wiring Harness (Passenger/Cargo)

Body Harness Routing - Right Rear Passenger Compartment - Passenger

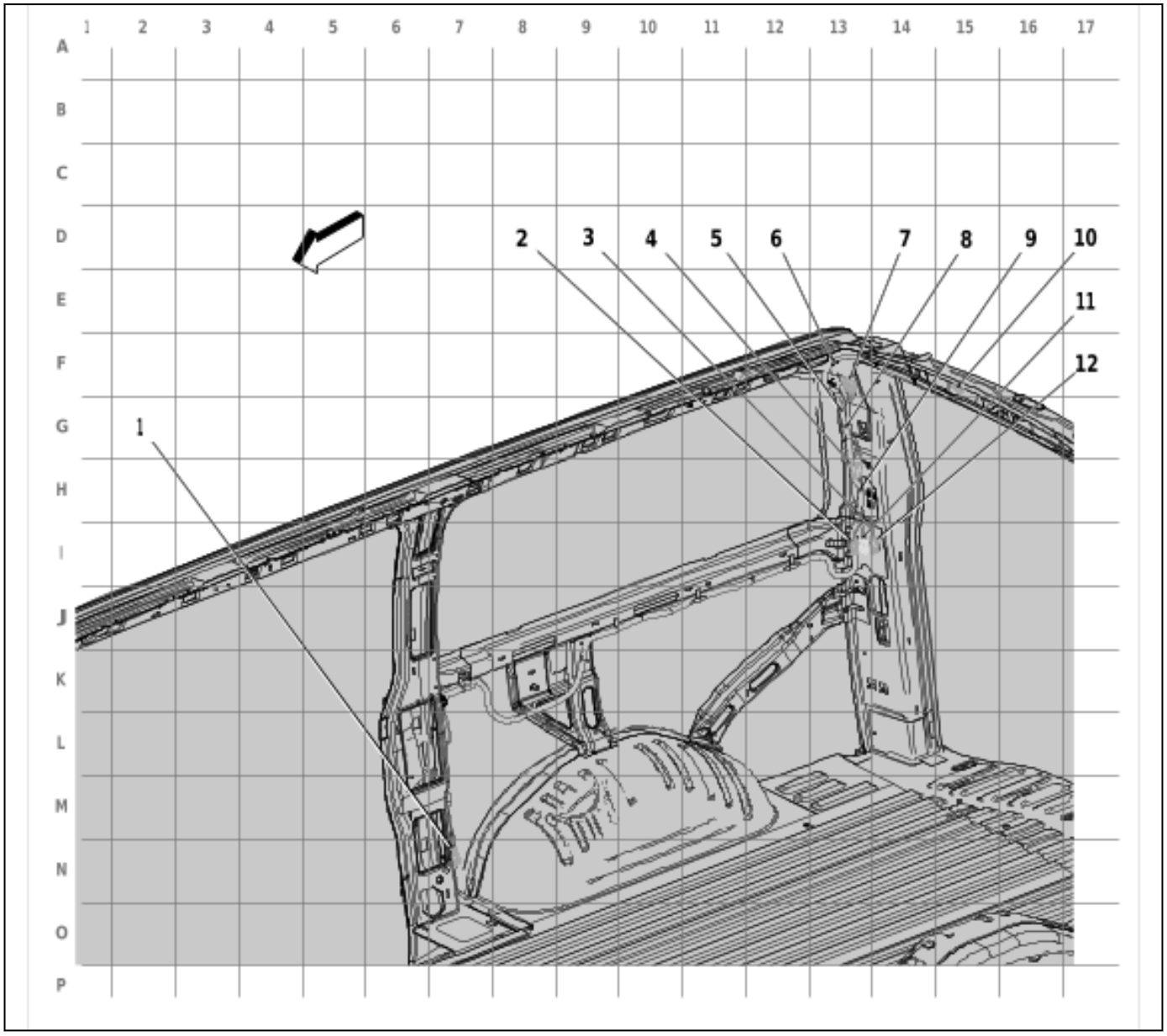

6193557

Items
(1) X324 Airbag Wiring Harness to Body Wiring Harness (ASF)
(2) X403 Rear Door Door Wiring Harness to Body Wiring Harness
(3) J376 Body Wiring Harness (Cargo/Passenger)
(4) X420 Tail Lamp Wiring Harness to Body Wiring Harness (Passenger/Cargo)
(5) J450 Body Wiring Harness
(6) J403 Body Wiring Harness (Cargo/Passenger)
(7) X421 Roof Console Wiring Harness to Body Wiring Harness
(8) J451 Body Wiring Harness
(9) X403 Rear Door Door Wiring Harness to Body Wiring Harness
(10) X415 Radio Rear Speaker Wiring Harness to Body Wiring Harness (Passenger/Cargo)
(11) X400 Rear Door Door Wiring Harness to Body Wiring Harness (Passenger/Cargo)
(12) X412 Rear Door Door Wiring Harness to Body Wiring Harness (Passenger/Cargo)

Auxiliary HVAC Harness Routing - Left Rear Passenger Compartment (C36 / C69)

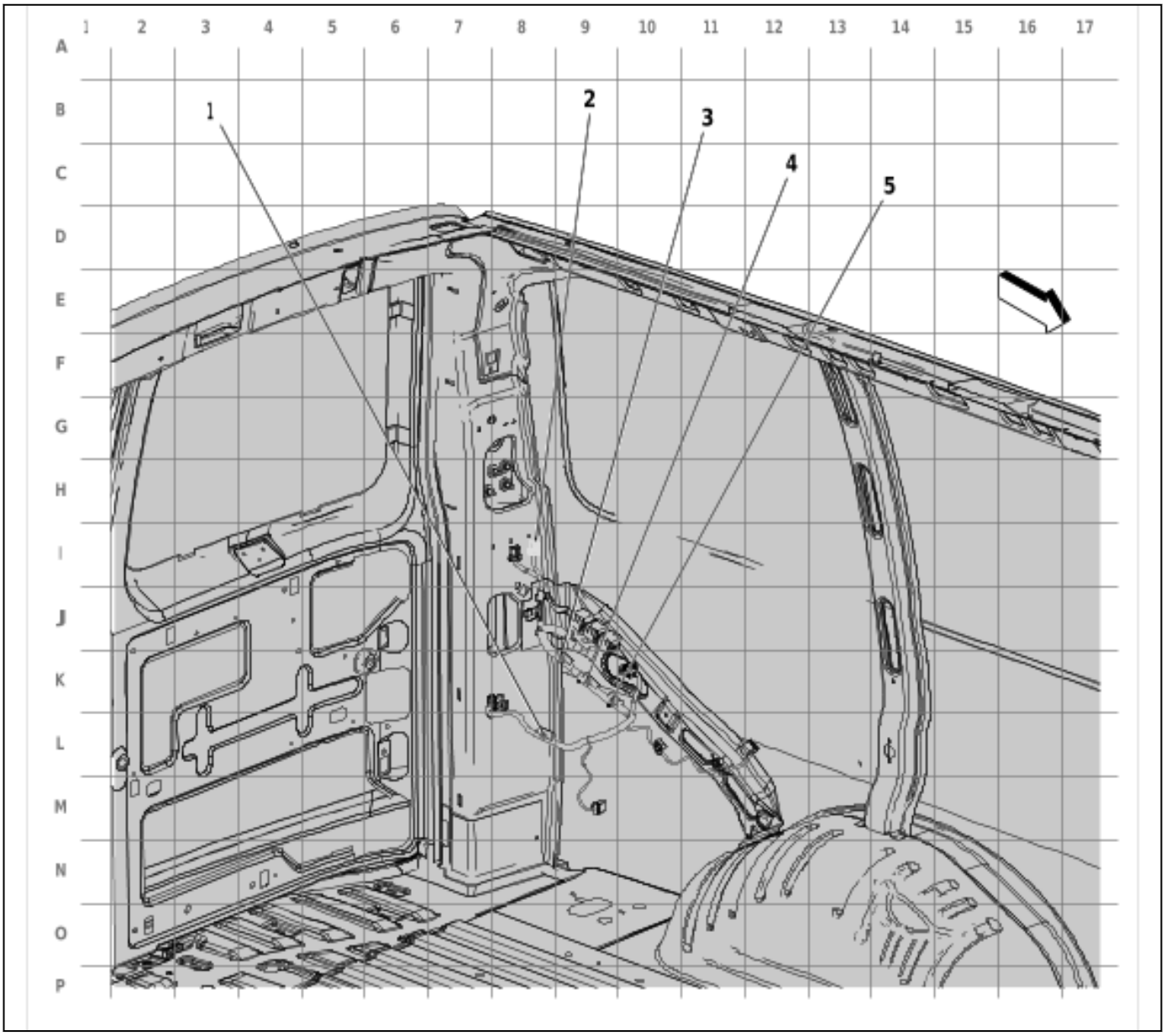

6594018

Items
(1) J413 Rear HVAC Wiring Harness (C36/C69)
(2) X407 Auxiliary Heater and Air Conditioning Wiring Harness to Body Wiring Harness
(3) J412 Rear HVAC Wiring Harness (C36/C69)
(4) J405 Rear HVAC Wiring Harness (C36/C69)
(5) J411 Rear HVAC Wiring Harness (C69)

Roof Harness Routing - Front

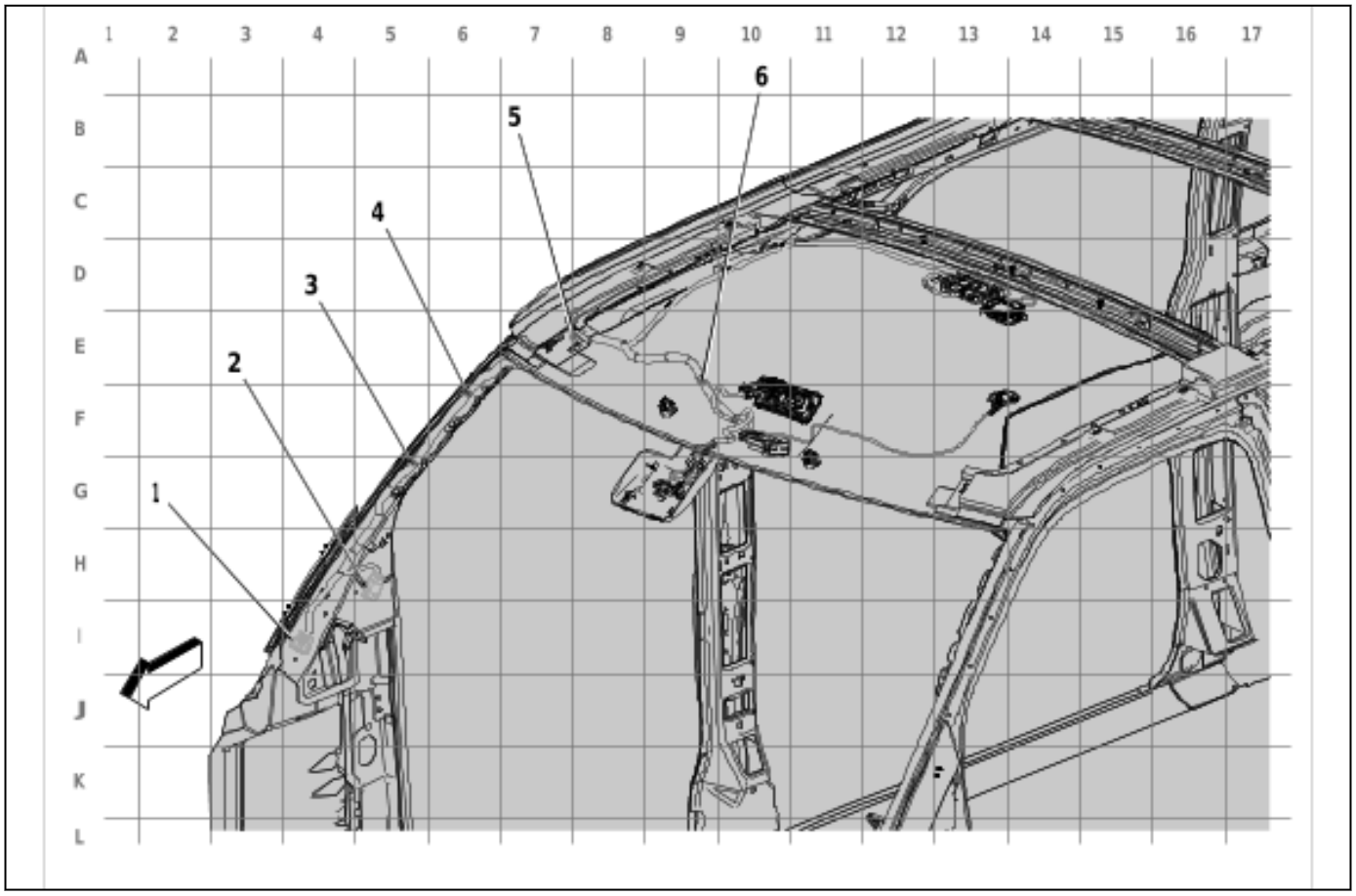

6003051

Items
(1) X205 Roof Console Wiring Harness to Body Wiring Harness
(2) X204 Body Wiring Harness to Roof Console Wiring Harness
(3) J314 Front Headliner Wiring Harness
(4) J333 Front Headliner Wiring Harness (DH6)
(5) J335 Front Headliner Wiring Harness (U80)
(6) J307 Front Headliner Wiring Harness (C69)

Roof Harness Routing - Rear

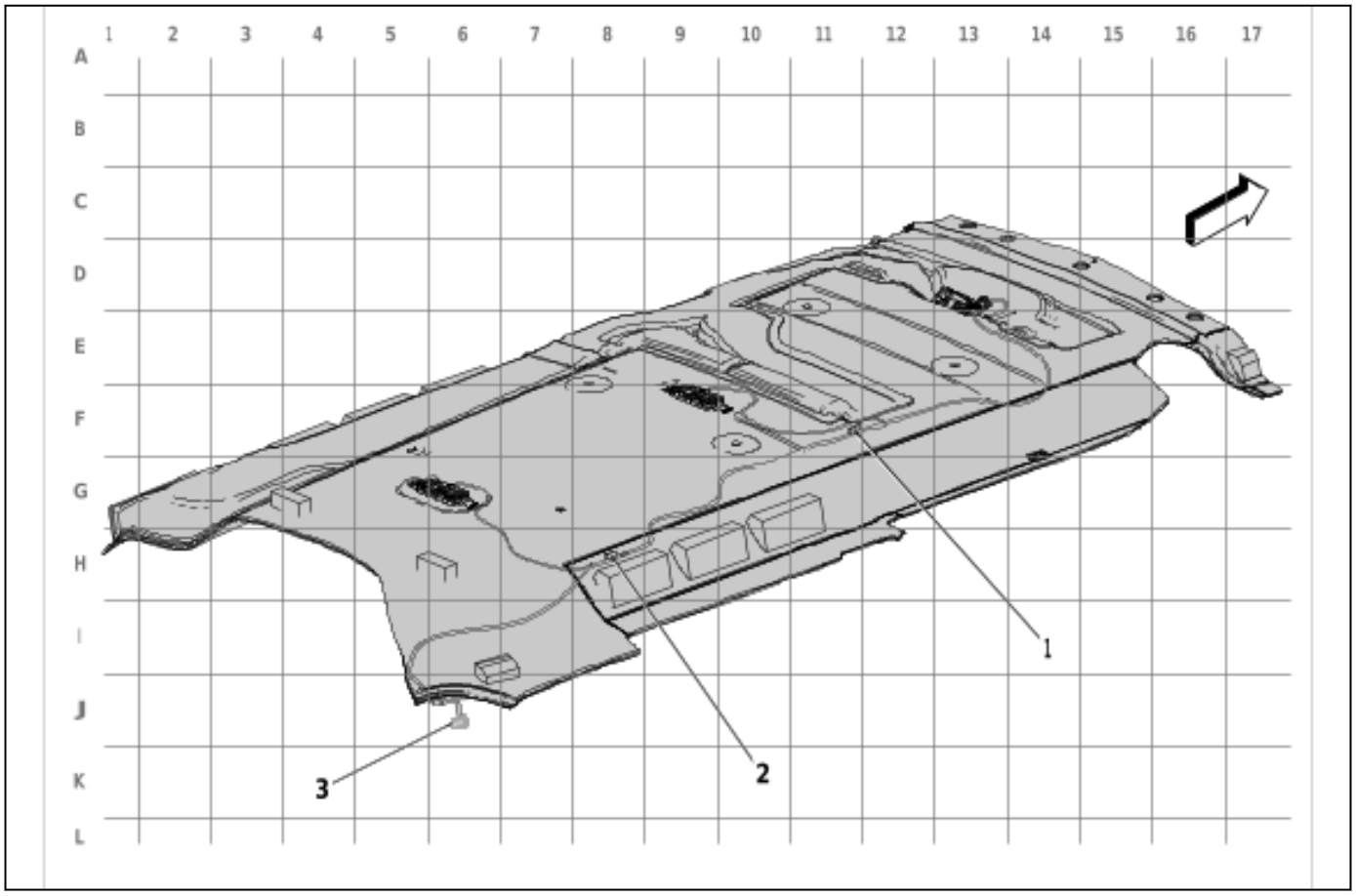

6003052

Items
(1) J330 Rear Headliner Wiring Harness (Passenger)
(2) J407 Rear Headliner Wiring Harness (Passenger)
(3) X421 Roof Console Wiring Harness to Body Wiring Harness

Door Harness Routing - Driver Door

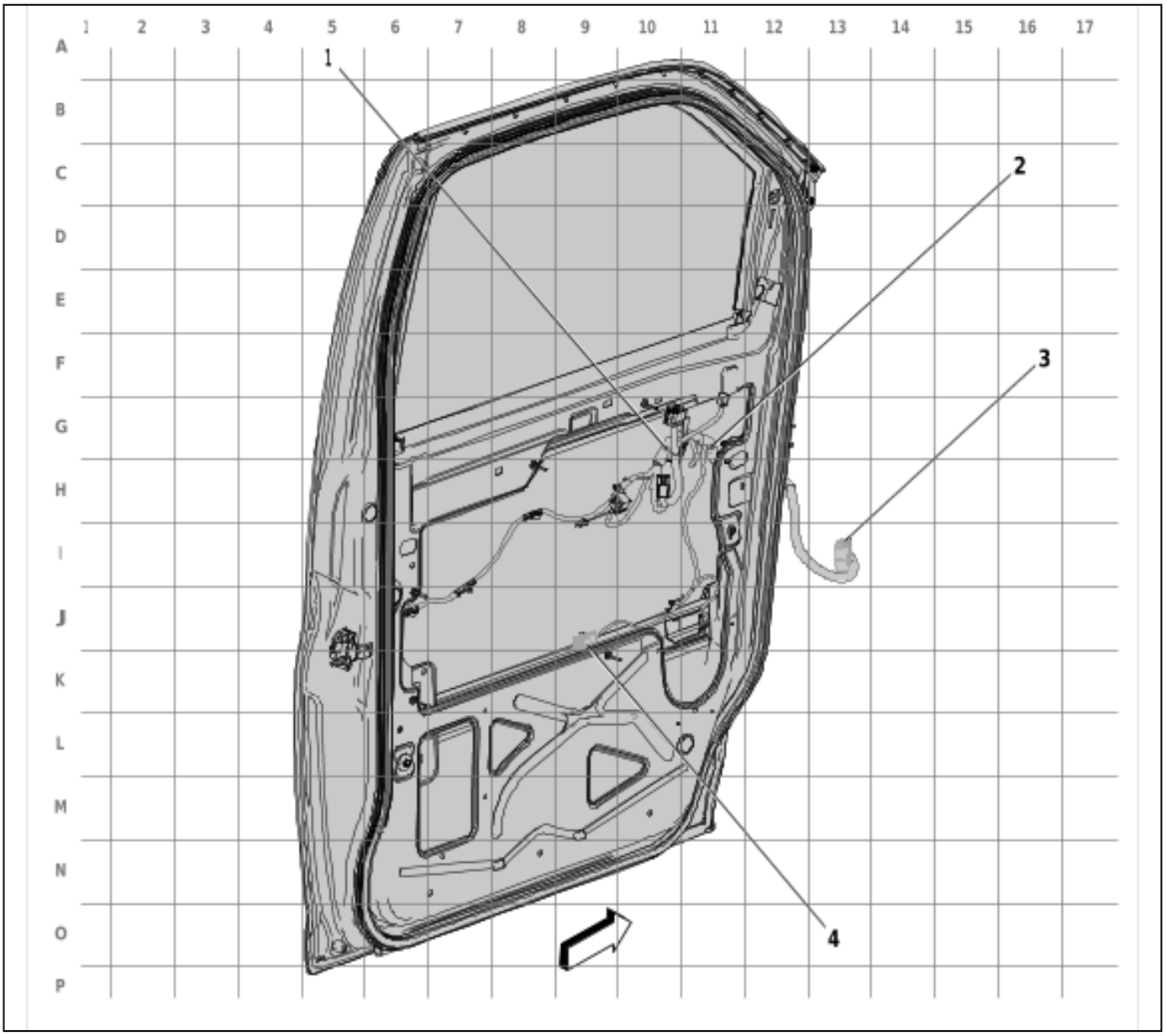

6003053

Items
(1) J500 Driver Door Wiring Harness (AU3/DE5/A31)
(2) J502 Driver Door Wiring Harness (DE5)
(3) X500 Front Side Door Door Wiring Harness - Driver to Body Wiring Harness
(4) X501 Airbag Wiring Harness to Front Side Door Door Wiring Harness - Driver (ASF)

Door Harness Routing - Passenger Door

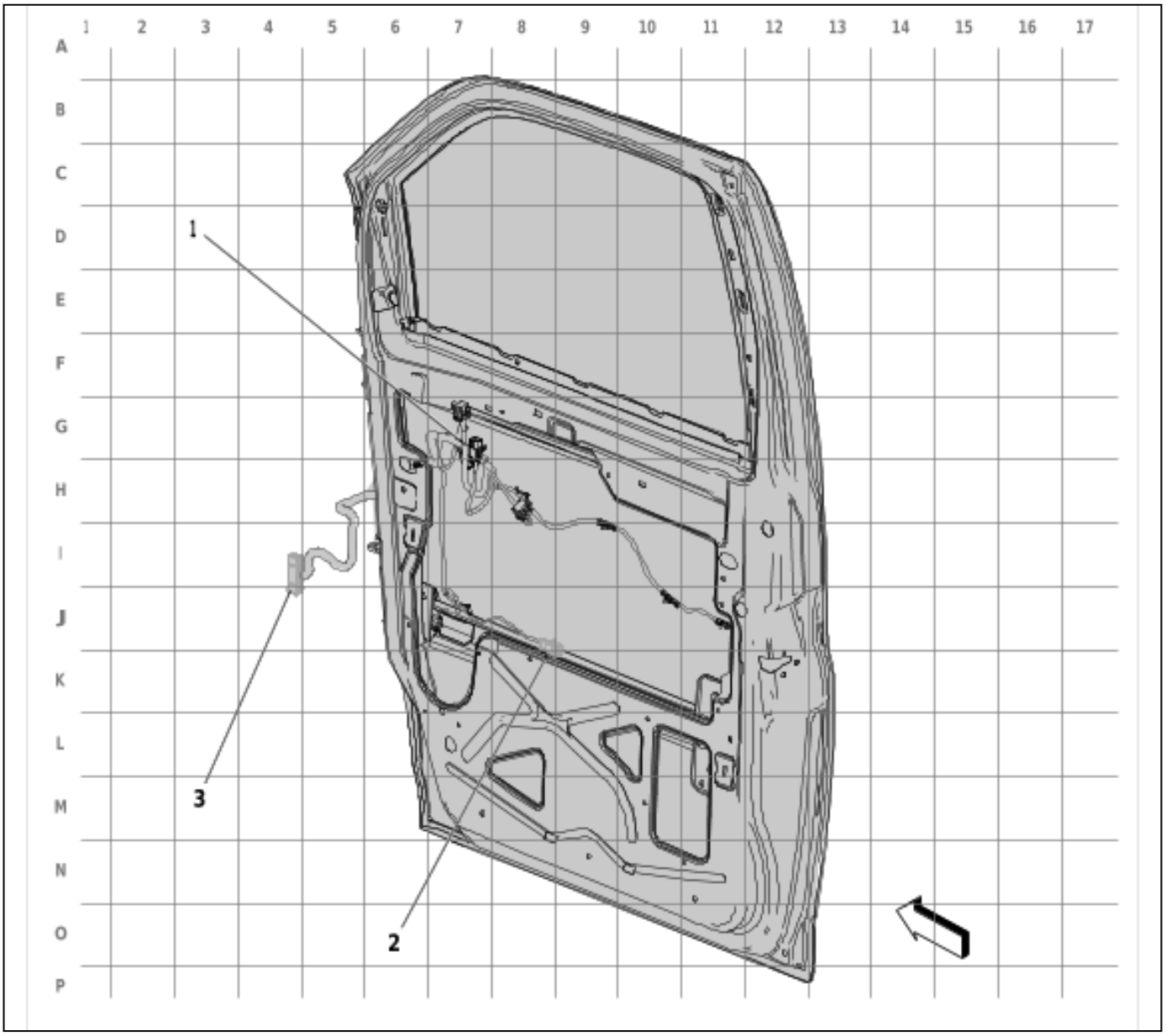

6003055

Items
(1) J600 Passenger Door Wiring Harness (AU3/DE5/A31)
(2) X601 Side Impact Sensor - Right Front Jumper Wiring Harness to Front Side Door Door Wiring Harness - Passenger (ASF)
(3) X600 Front Side Door Door Wiring Harness - Passenger to Body Wiring Harness

Door Harness Routing - Driver Rear - Passenger/Cargo

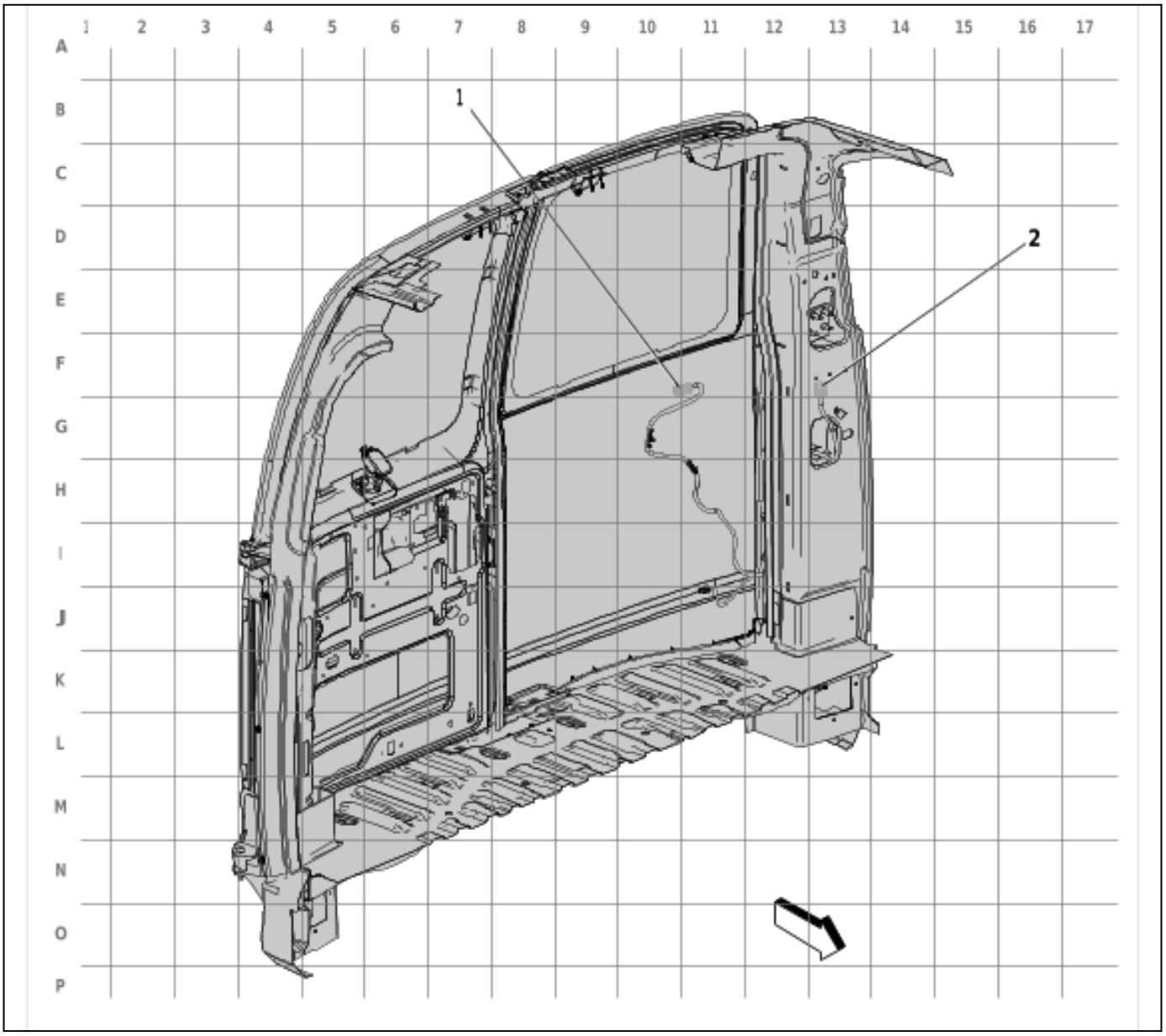

6003056

Items
(1) X901 Rear Window Defogger Wiring Harness to Rear Door Door Wiring Harness - Left (C49)
(2) X411 Rear Door Door Wiring Harness - Left to Body Wiring Harness (Passenger/Cargo)

Door Harness Routing - Passenger Rear - Passenger/Cargo

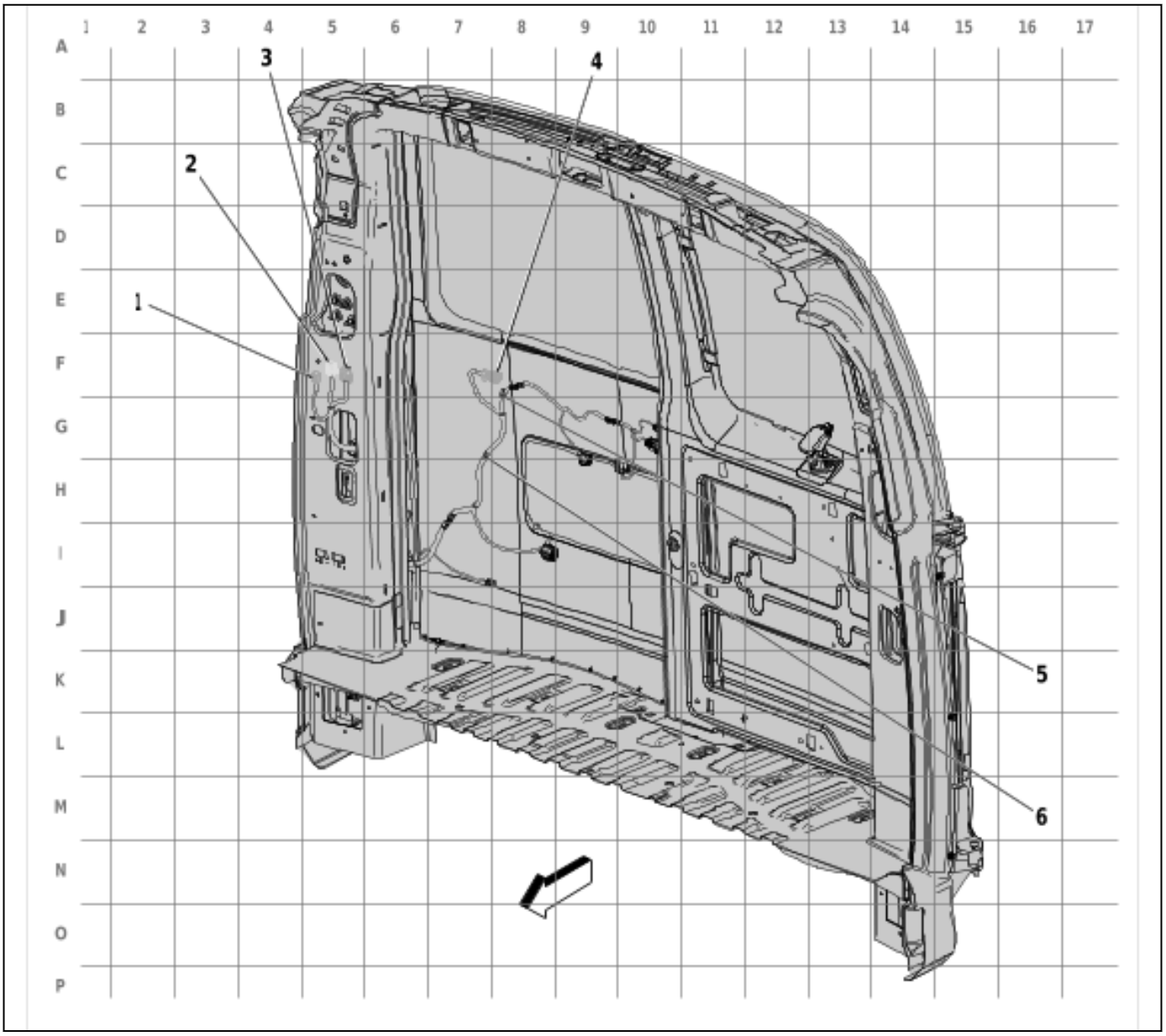

6003057

Items
(1) X403 Rear Door Door Wiring Harness to Body Wiring Harness
(2) X400 Rear Door Door Wiring Harness to Body Wiring Harness (Passenger/Cargo)
(3) X412 Rear Door Door Wiring Harness to Body Wiring Harness (Passenger/Cargo)
(4) X902 Rear Window Defogger Wiring Harness to Rear Door Door Wiring Harness (C49)
(5) J901 Right Rear Cargo Door Wiring Harness (Cargo/Passenger + AU3)
(6) J902 Right Rear Cargo Door Wiring Harness (Cargo/Passenger + C49)

Chassis Harness Routing - Underbody - Passenger/Cargo with SWB

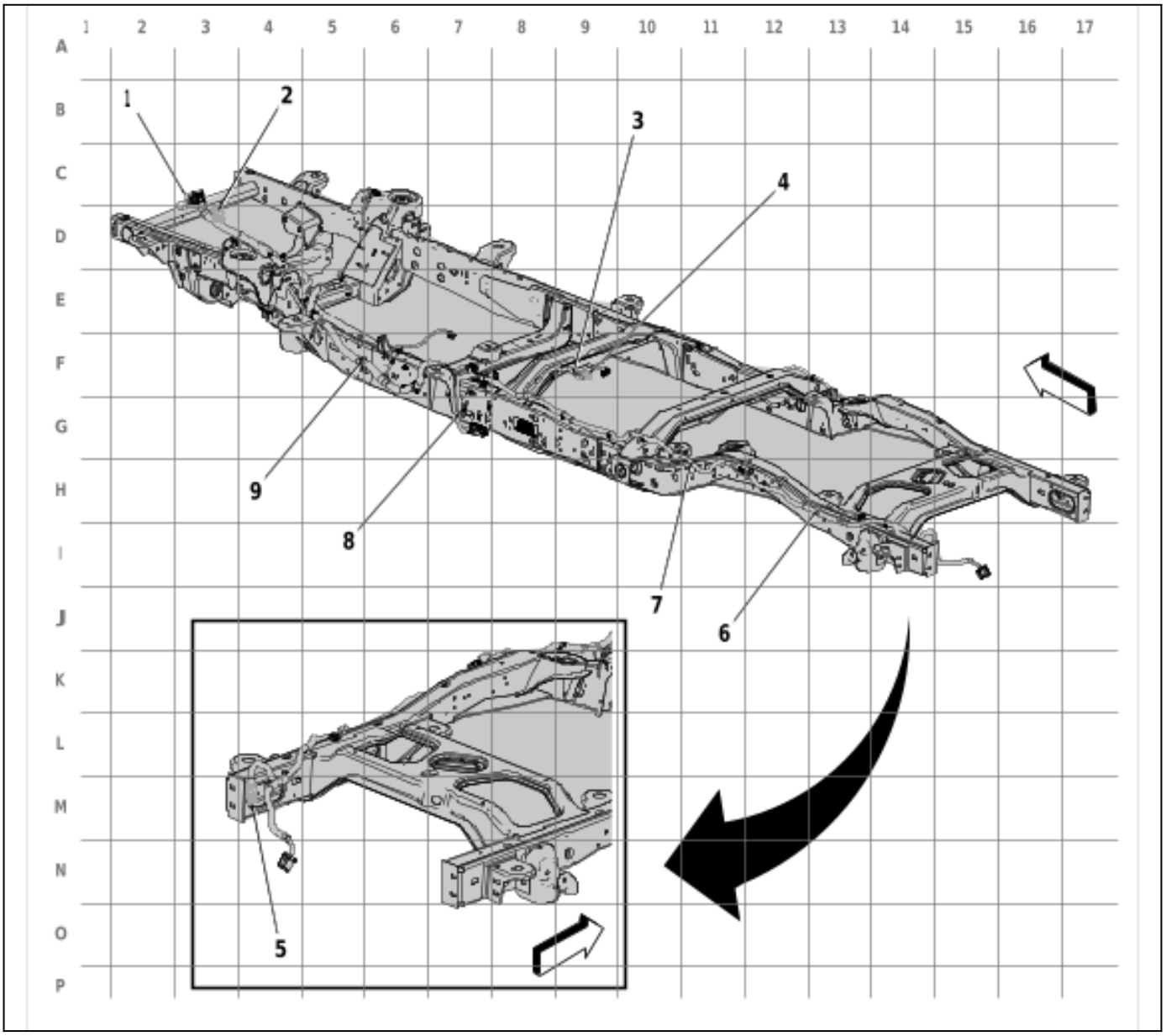

5985298

Items
(1) X185 Instrument Panel Wiring Harness to Chassis Wiring Harness
(2) X101 Engine Wiring Harness to Chassis Wiring Harness
(3) J432 Chassis Wiring Harness
(4) X102 Chassis Wiring Harness to Fuel Tank Wiring Harness
(5) X408 Rear Object Alarm Sensor Wiring Harness to Chassis Wiring Harness
(6) J404 Chassis Wiring Harness
(7) J402 Chassis Wiring Harness
(8) J431 Chassis Wiring Harness
(9) J315 Chassis Wiring Harness

Chassis Harness Routing - Underbody - Passenger/Cargo with LWB

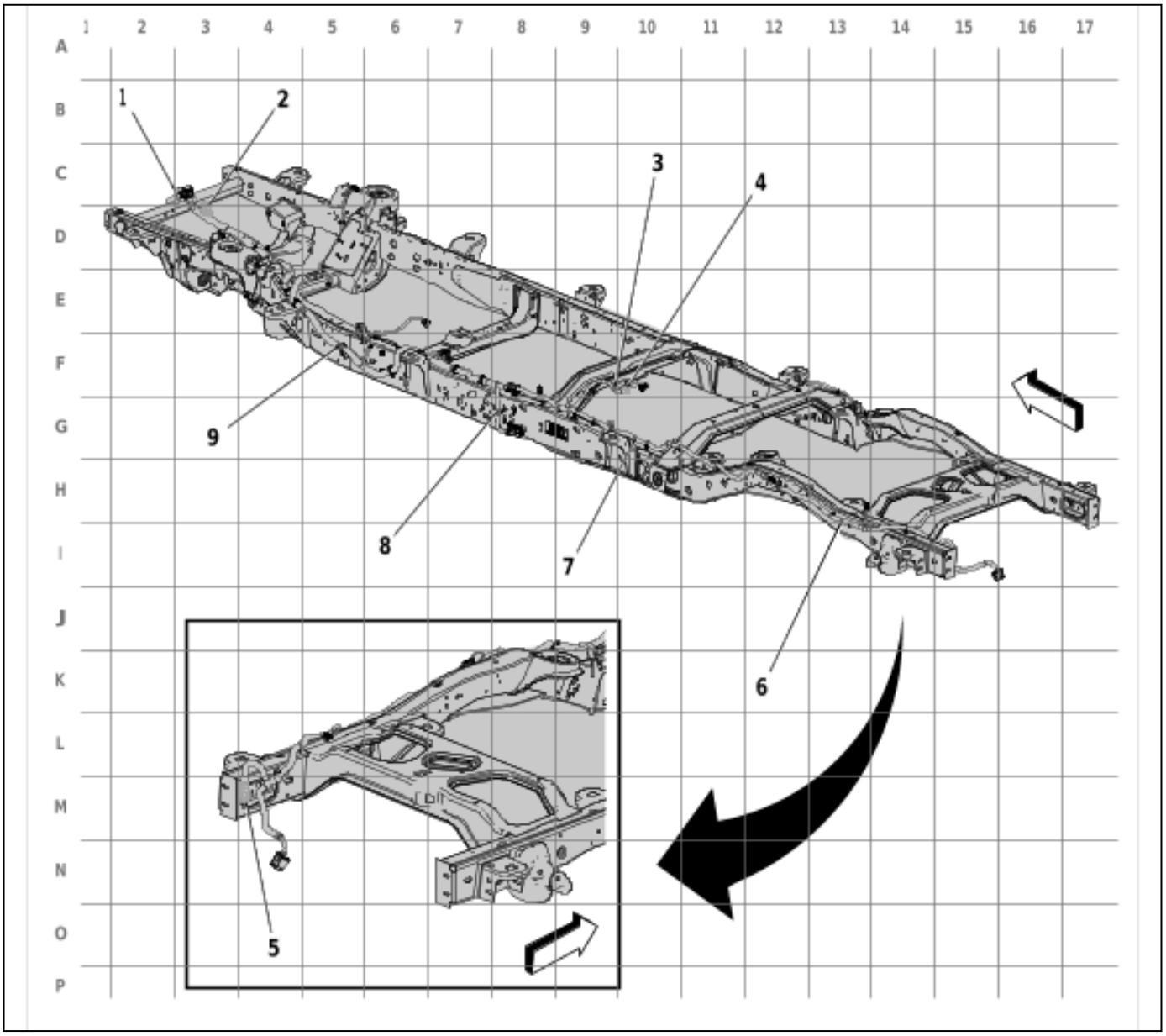

5985299

Items
(1) X185 Instrument Panel Wiring Harness to Chassis Wiring Harness
(2) X101 Engine Wiring Harness to Chassis Wiring Harness
(3) J432 Chassis Wiring Harness
(4) X102 Chassis Wiring Harness to Fuel Tank Wiring Harness
(5) X408 Rear Object Alarm Sensor Wiring Harness to Chassis Wiring Harness
(6) J404 Chassis Wiring Harness
(7) J402 Chassis Wiring Harness
(8) J431 Chassis Wiring Harness
(9) J315 Chassis Wiring Harness

Chassis Harness Routing - Underbody - Cutaway (NE7)

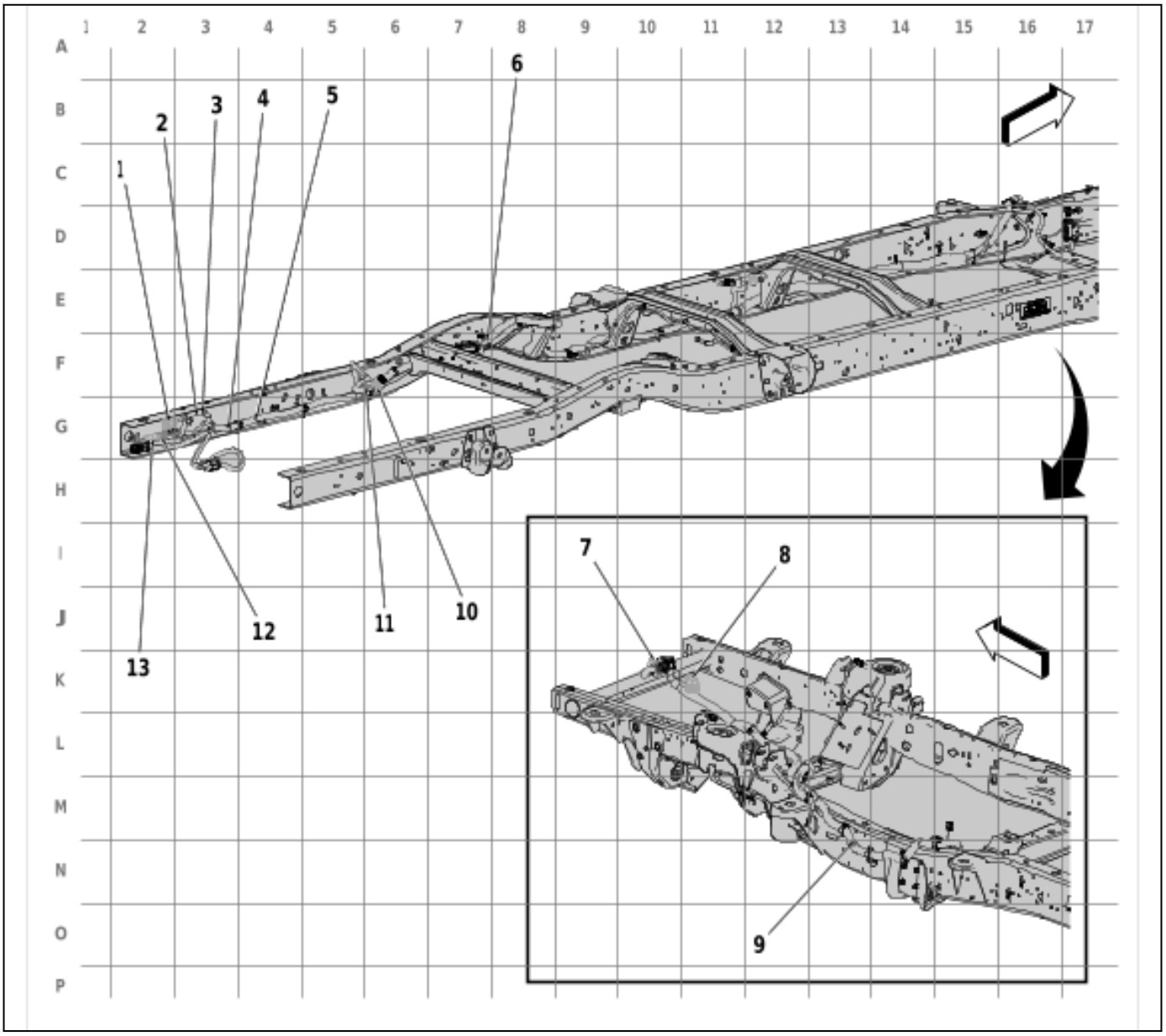

5985300

Items
(1) X405 Chassis Rear Wiring Harness Extension Harness to Chassis Rear Wiring Harness Extension Harness - Cutaway (Cutaway/UY7)
(2) J387 Chassis Wiring Harness (Cutaway)
(3) J388 Chassis Wiring Harness (Cutaway)
(4) J404 Chassis Wiring Harness
(5) J402 Chassis Wiring Harness
(6) J431 Chassis Wiring Harness
(7) X185 Instrument Panel Wiring Harness to Chassis Wiring Harness
(8) X101 Engine Wiring Harness to Chassis Wiring Harness
(9) J315 Chassis Wiring Harness
(10) X102 Chassis Wiring Harness to Fuel Tank Wiring Harness

Items
(11) J432 Chassis Wiring Harness
(12) W8 Blunt Cut - Trailer Provision
(13) X460 Chassis Wiring Harness to Chassis Wiring Harness

Chassis Harness Routing - Underbody - Cutaway (- NE7)

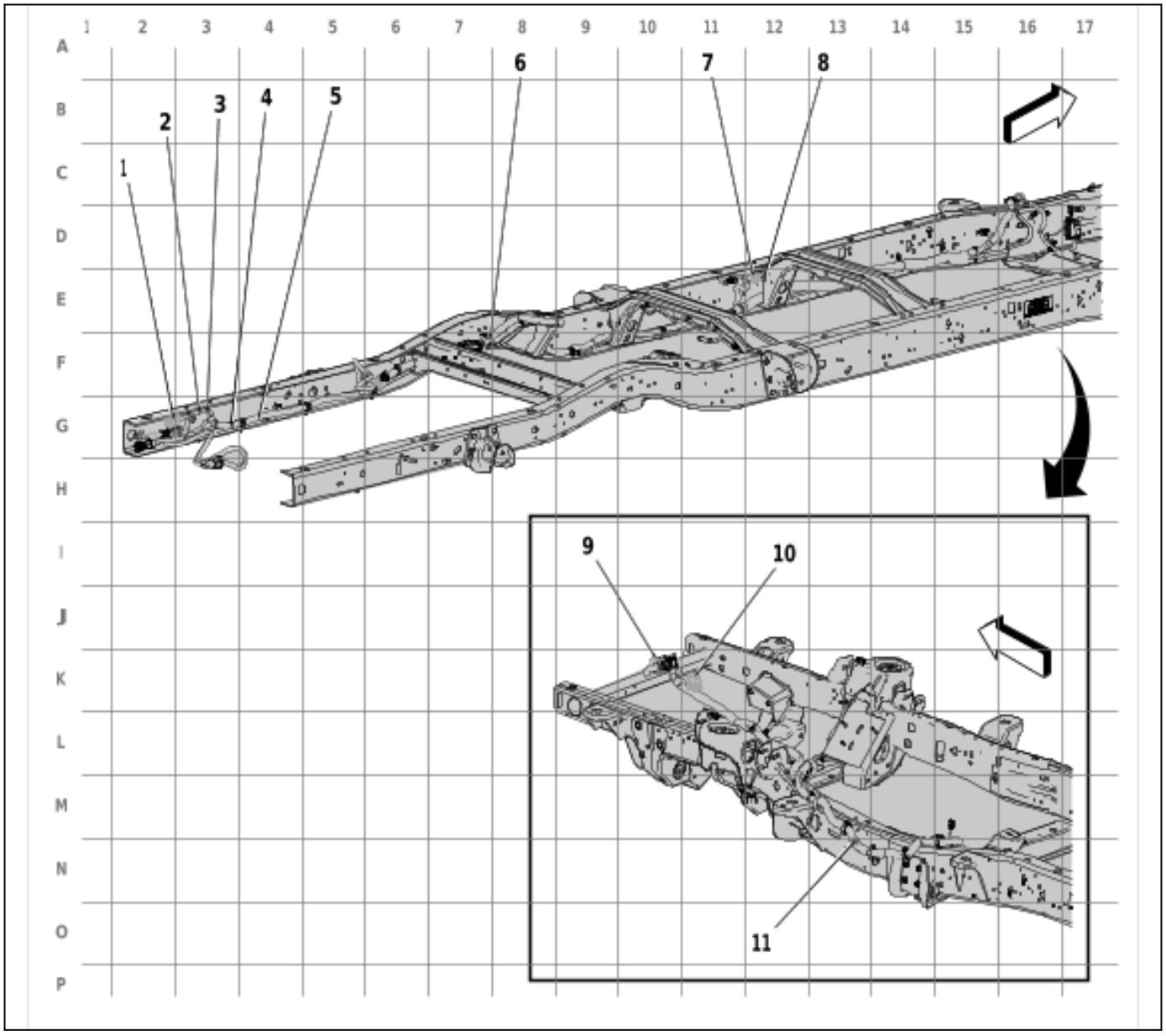

5985301

Items
(1) X405 Chassis Rear Wiring Harness Extension Harness to Chassis Rear Wiring Harness Extension Harness - Cutaway (Cutaway/UY7)
(2) J387 Chassis Wiring Harness (Cutaway)
(3) J388 Chassis Wiring Harness (Cutaway)
(4) J404 Chassis Wiring Harness
(5) J402 Chassis Wiring Harness

Items
(6) J431 Chassis Wiring Harness
(7) X102 Chassis Wiring Harness to Fuel Tank Wiring Harness
(8) J432 Chassis Wiring Harness
(9) X185 Instrument Panel Wiring Harness to Chassis Wiring Harness
(10) X101 Engine Wiring Harness to Chassis Wiring Harness
(11) J315 Chassis Wiring Harness

Rear Bumper Harness Routing

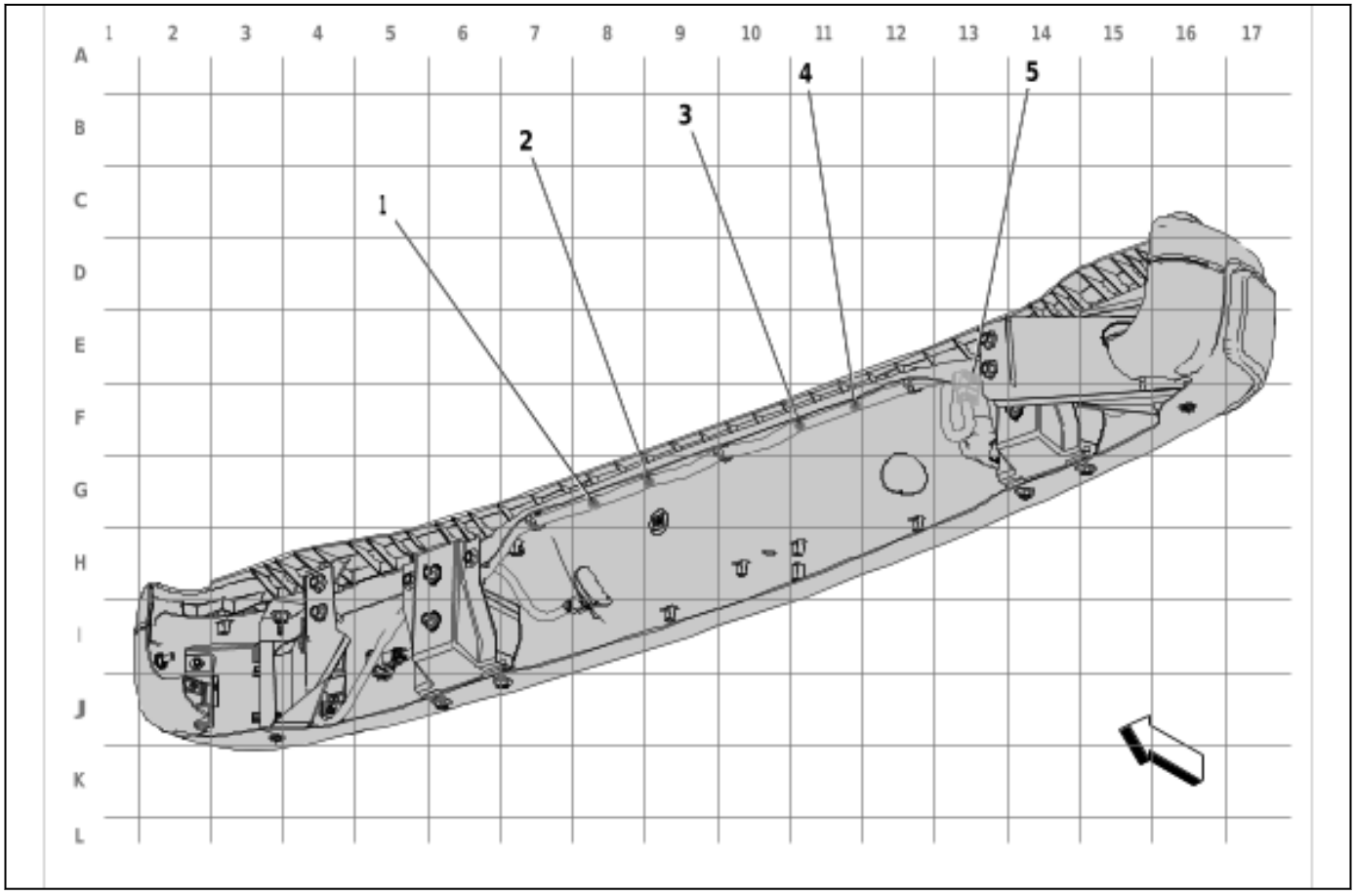

6003058

Items
(1) J425 Parking Aid Jumper Wiring Harness (UFT)
(2) J426 Parking Aid Jumper Wiring Harness (UFT)
(3) J420 Rear Bumper Wiring Harness (UD7)
(4) J421 Rear Bumper Wiring Harness (UD7)
(5) X408 Rear Object Alarm Sensor Wiring Harness to Chassis Wiring Harness

Upfitter Provision Harness Routing - Engine Compartment (9L7)

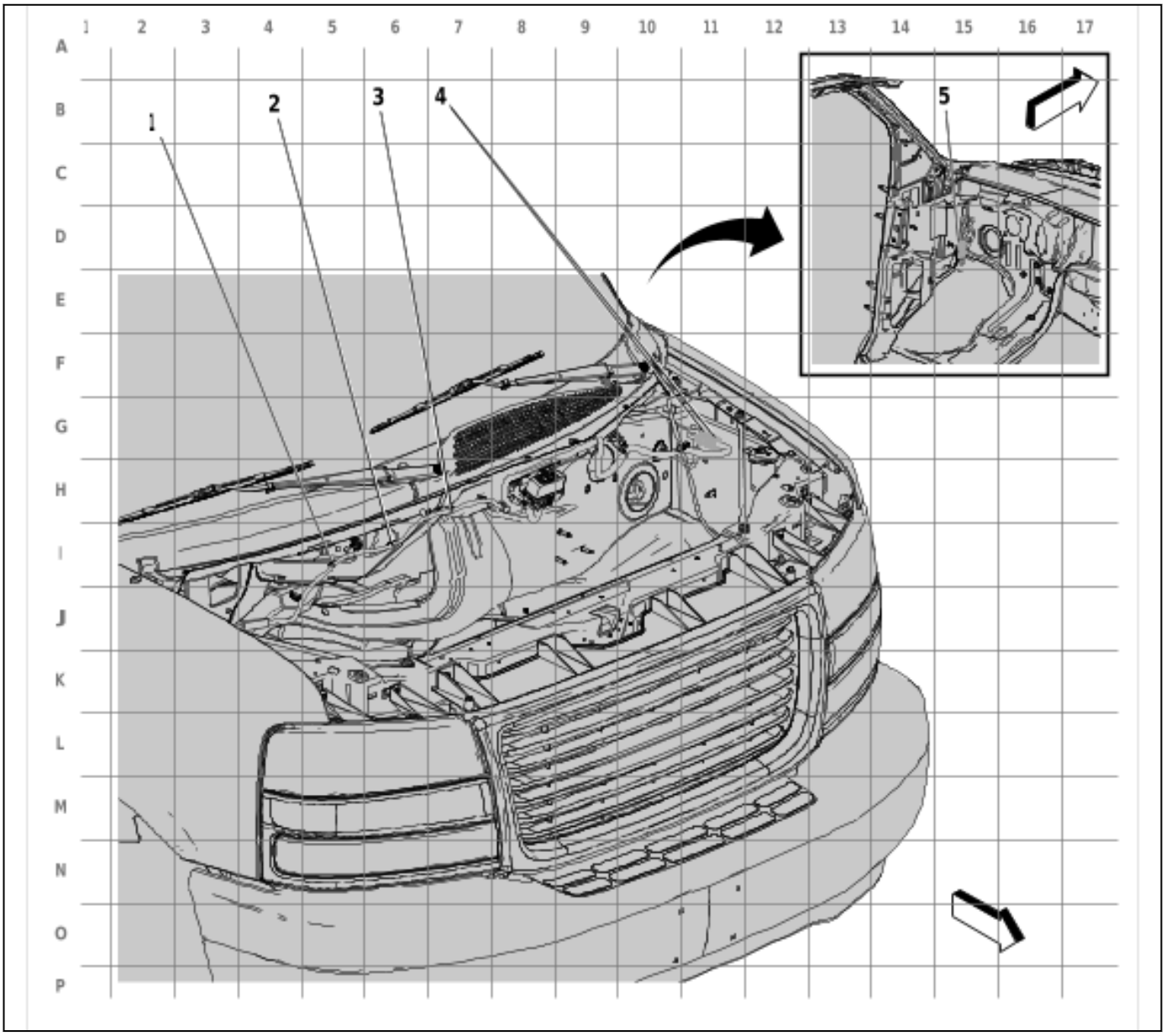

6003060

Items
(1) J104 Fuse Block Jumper Wiring Harness (9L7)
(2) J105 Fuse Block Jumper Wiring Harness (9L7)
(3) J106 Fuse Block Jumper Wiring Harness (9L7)
(4) X190 Accessory Wiring Harness to Accessory Power Fuse Block Rear Wiring Harness Extension Harness (9L7)
(5) X291 Accessory Power Fuse Block Rear Wiring Harness Extension Harness to Accessory Power Fuse Block Rear Wiring Harness Extension Harness (9L7)

Component Locator

Brake Booster Fluid Alarm Switches (UJ1)

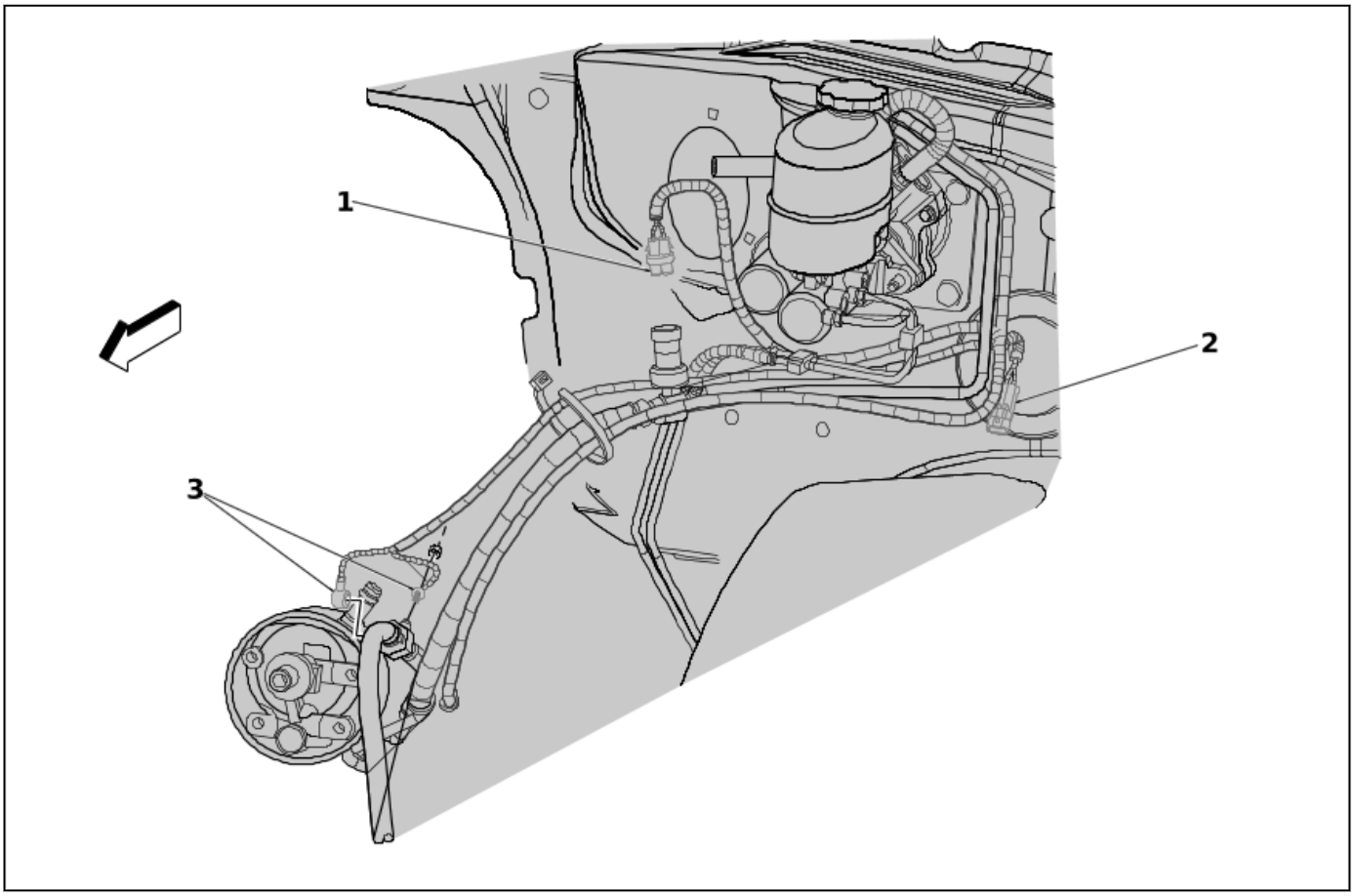

2831205

Items
(1) B19A Brake Booster Fluid Pressure Alarm Switch
(2) X141 Instrument Panel Wiring Harness to Brake Fluid Level Indicator Wiring Harness (UJ1)
(3) B133 Brake Booster Fluid Flow Alarm Switch

Front of Vehicle Components

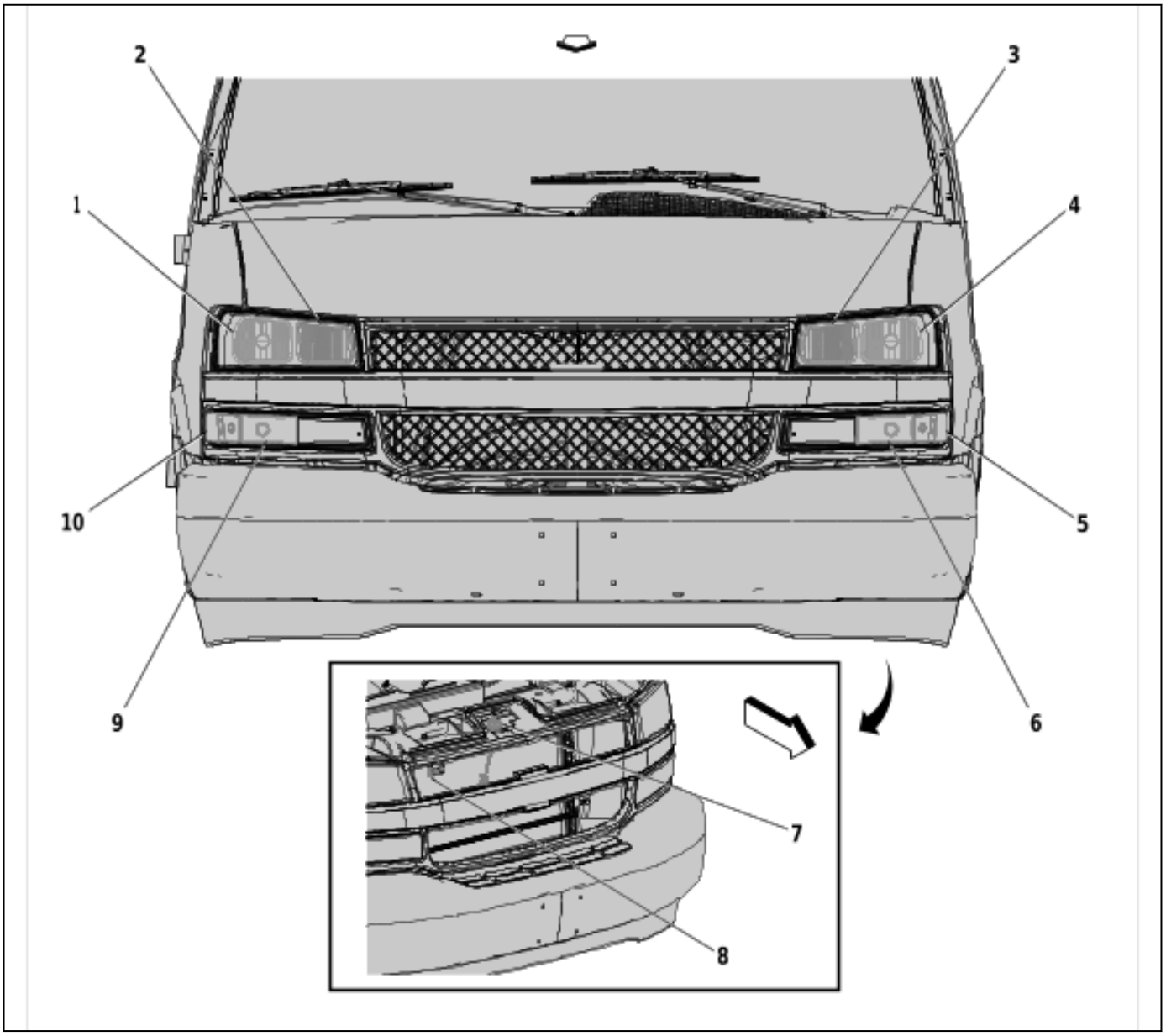

6040670

Items
(1) E4H Headlamp - Right Low Beam
(2) E4F Headlamp - Right High Beam
(3) E4E Headlamp - Left High Beam
(4) E4G Headlamp - Left Low Beam
(5) E2LF Side Marker Lamp - Left Front
(6) E4N Park/Turn Signal Lamp - Left
(7) B55 Engine Hood Switch (BTV)
(8) B9 Ambient Air Temperature Sensor (UFA)
(9) E4P Park/Turn Signal Lamp - Right
(10) E2RF Side Marker Lamp - Right Front

Right Rear of the Engine Compartment Components

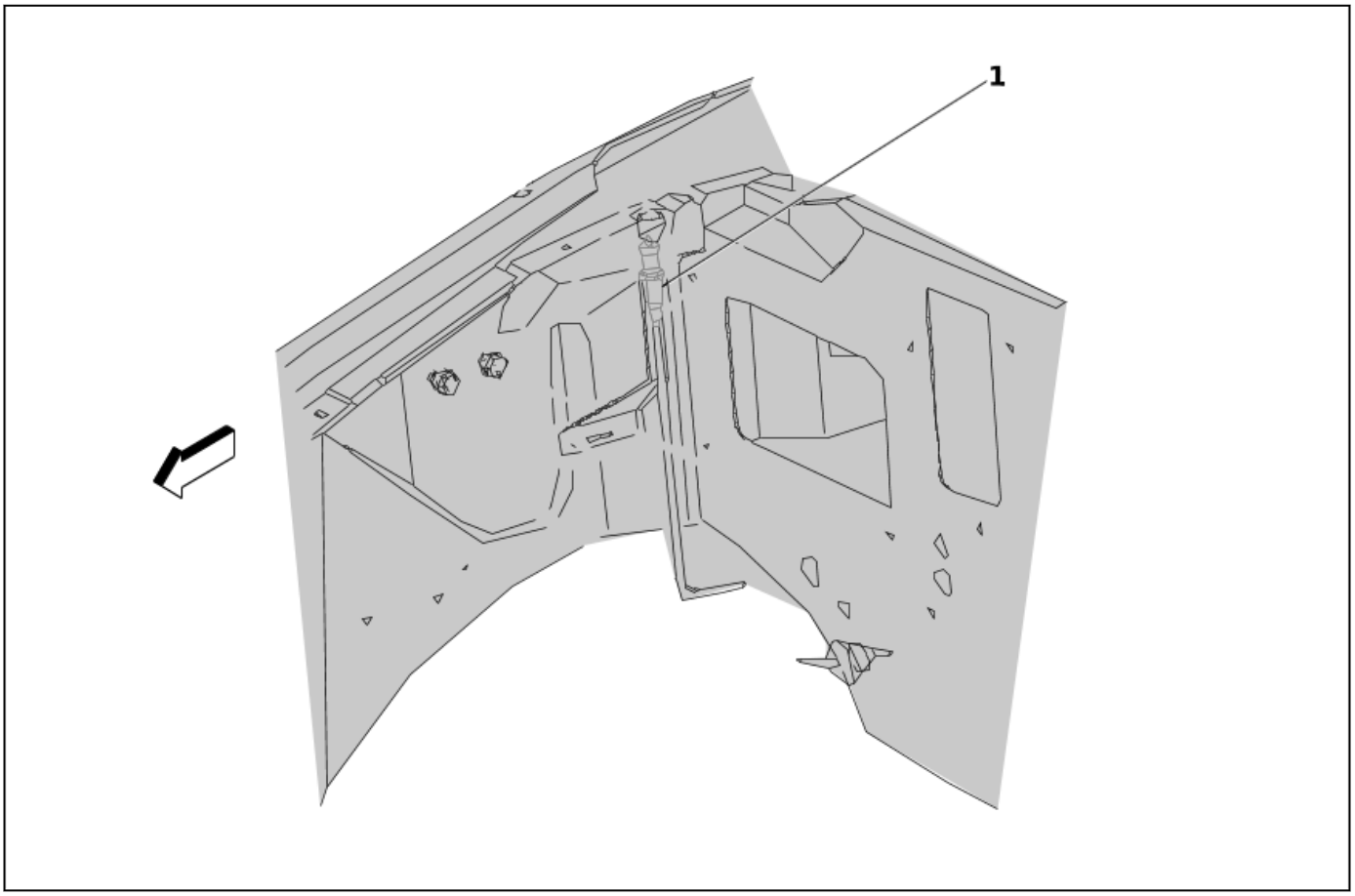

4003764

Items
(1) T4M Radio Antenna

Engine Compartment Components - 1 of 3

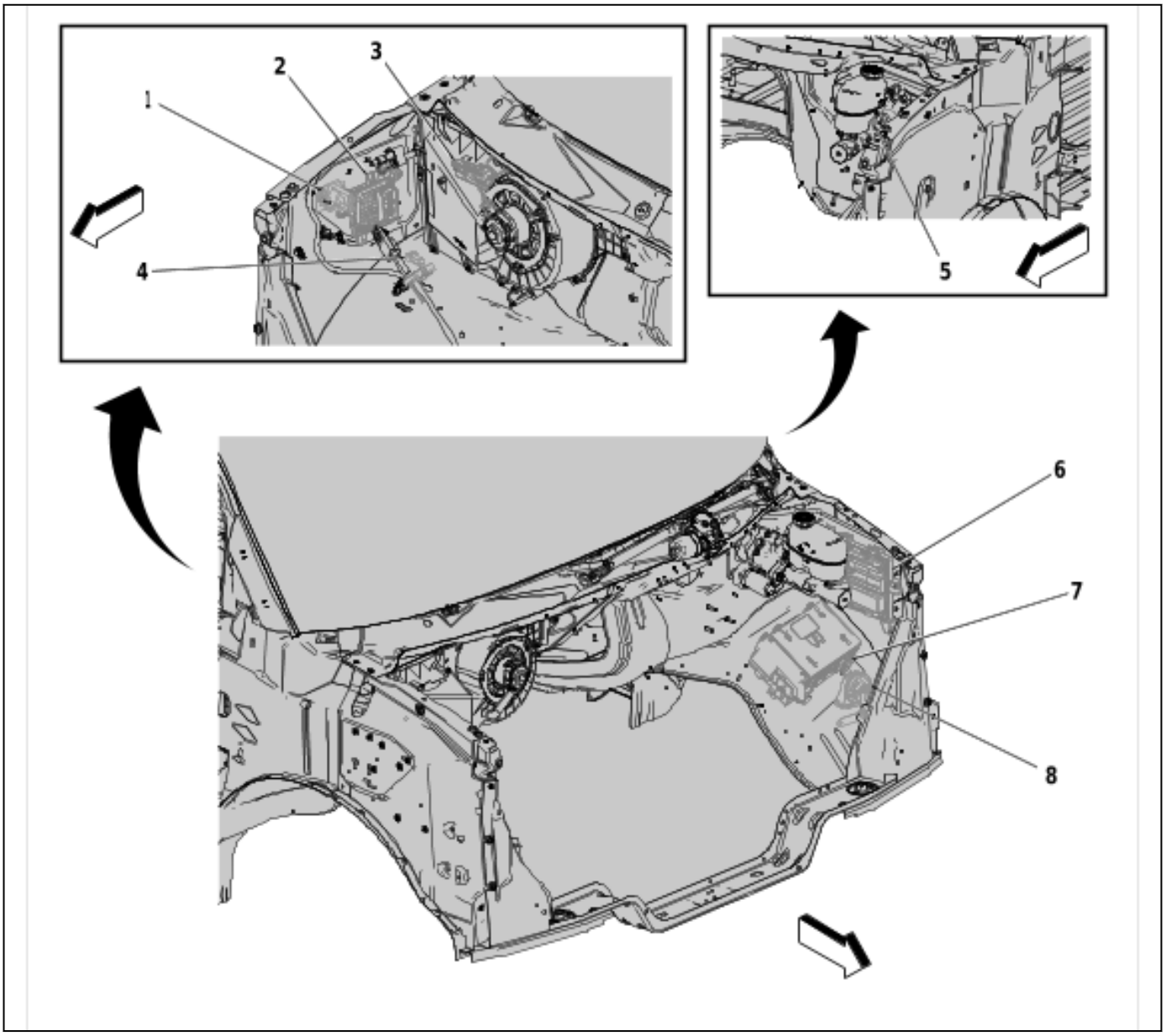

6326433

Items
(1) KR81 Auxiliary Battery Relay 1
(2) K71 Transmission Control Module
(3) R3 Blower Motor Resistor
(4) R6A Terminating Resistor - High Speed Bus
(5) B20 Brake Fluid Level Switch
(6) K20 Engine Control Module (LV1/L8T)
(7) X50A Fuse Block - Underhood
(8) P13 Horn Assembly

Engine Compartment Components - 2 of 3

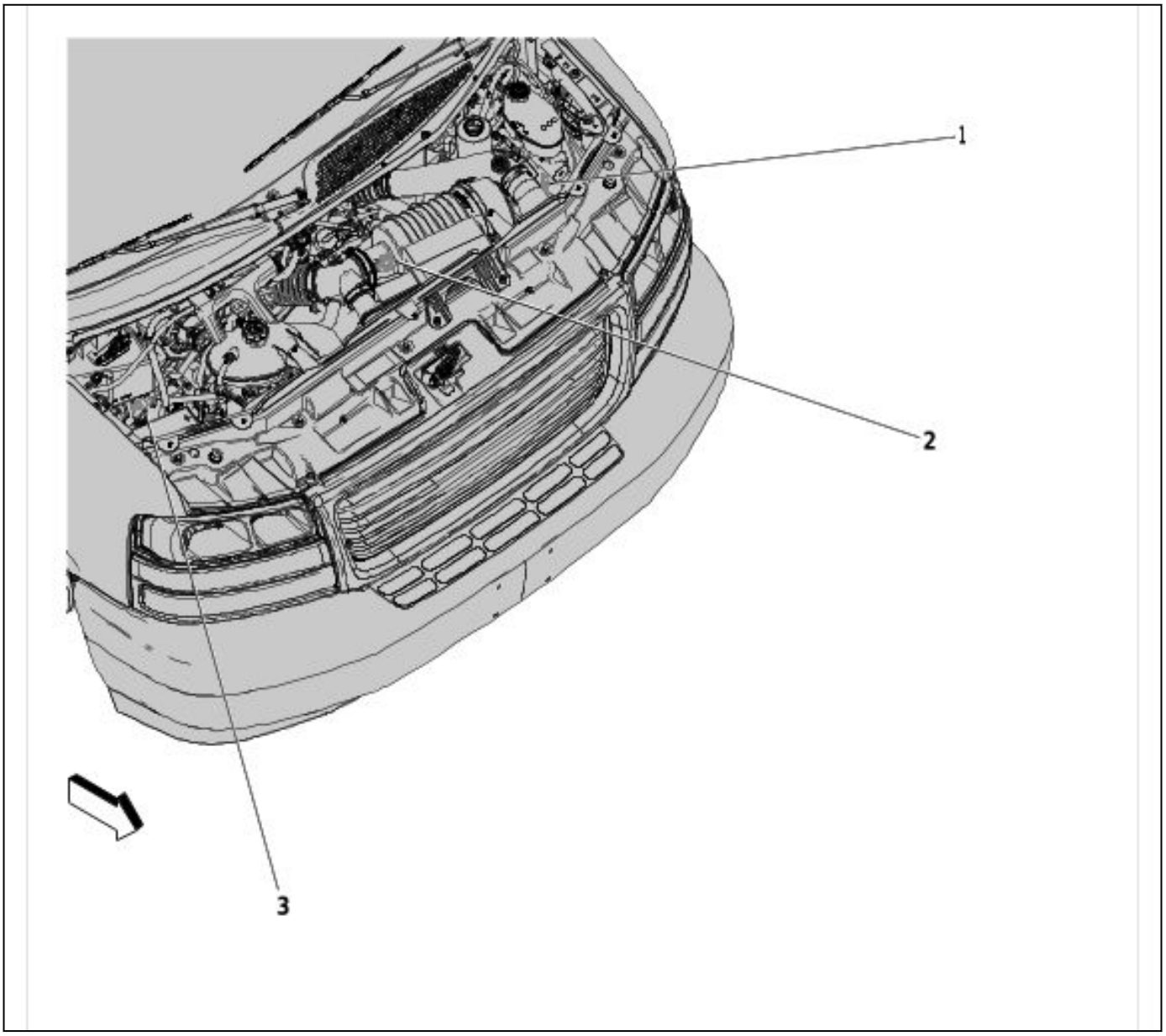

6087089

Items
(1) B1 A/C Refrigerant Pressure Sensor
(2) B75C Multifunction Intake Air Sensor
(3) B1B A/C Low Side Pressure Switch

Engine Compartment Components - 3 of 3

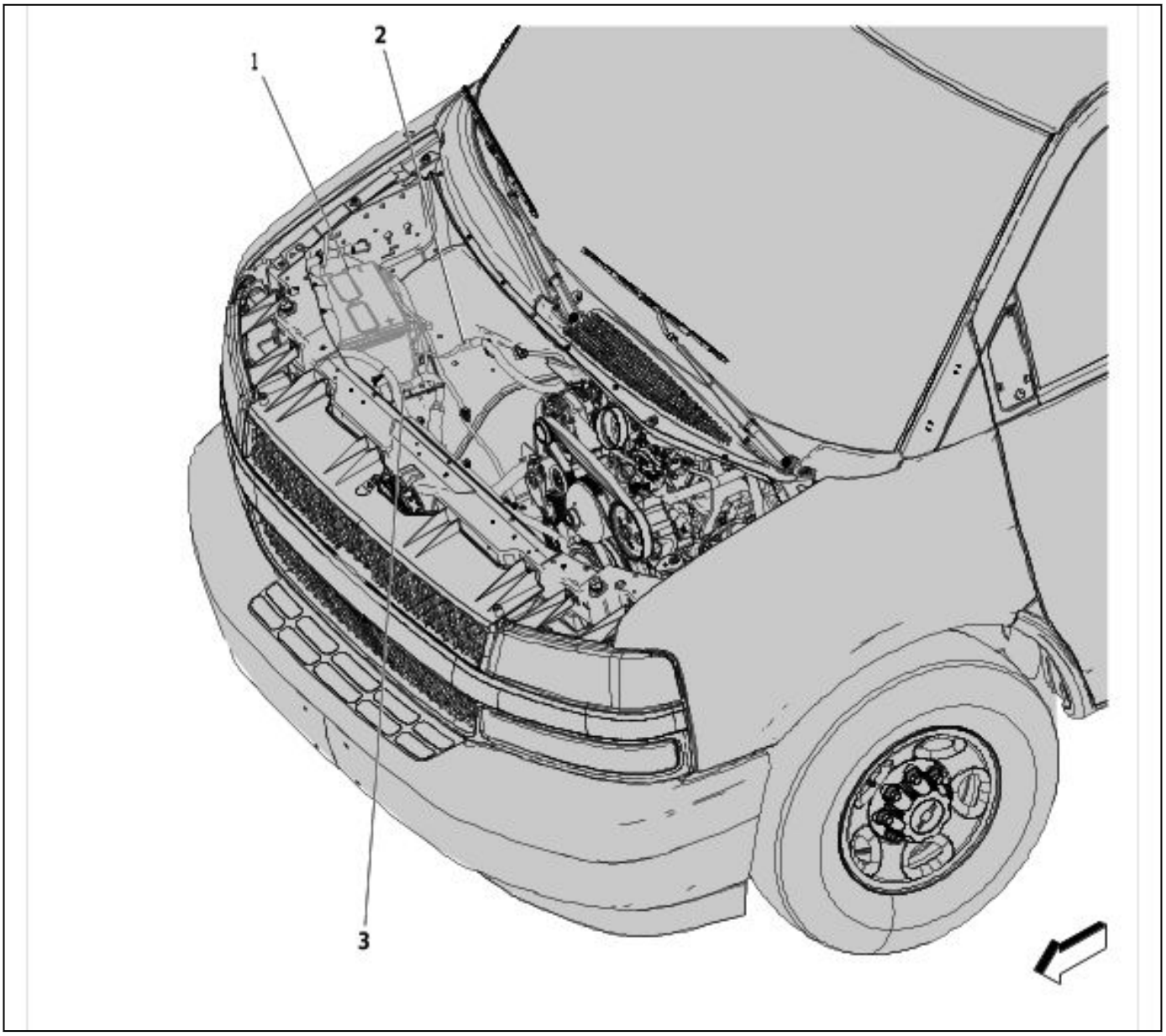

6133374

Items
(1) C1 Battery
(2) F104C Fusible Link 3
(3) F104B Fusible Link 2

Engine Compartment Components - 4 of 7 (LV1)

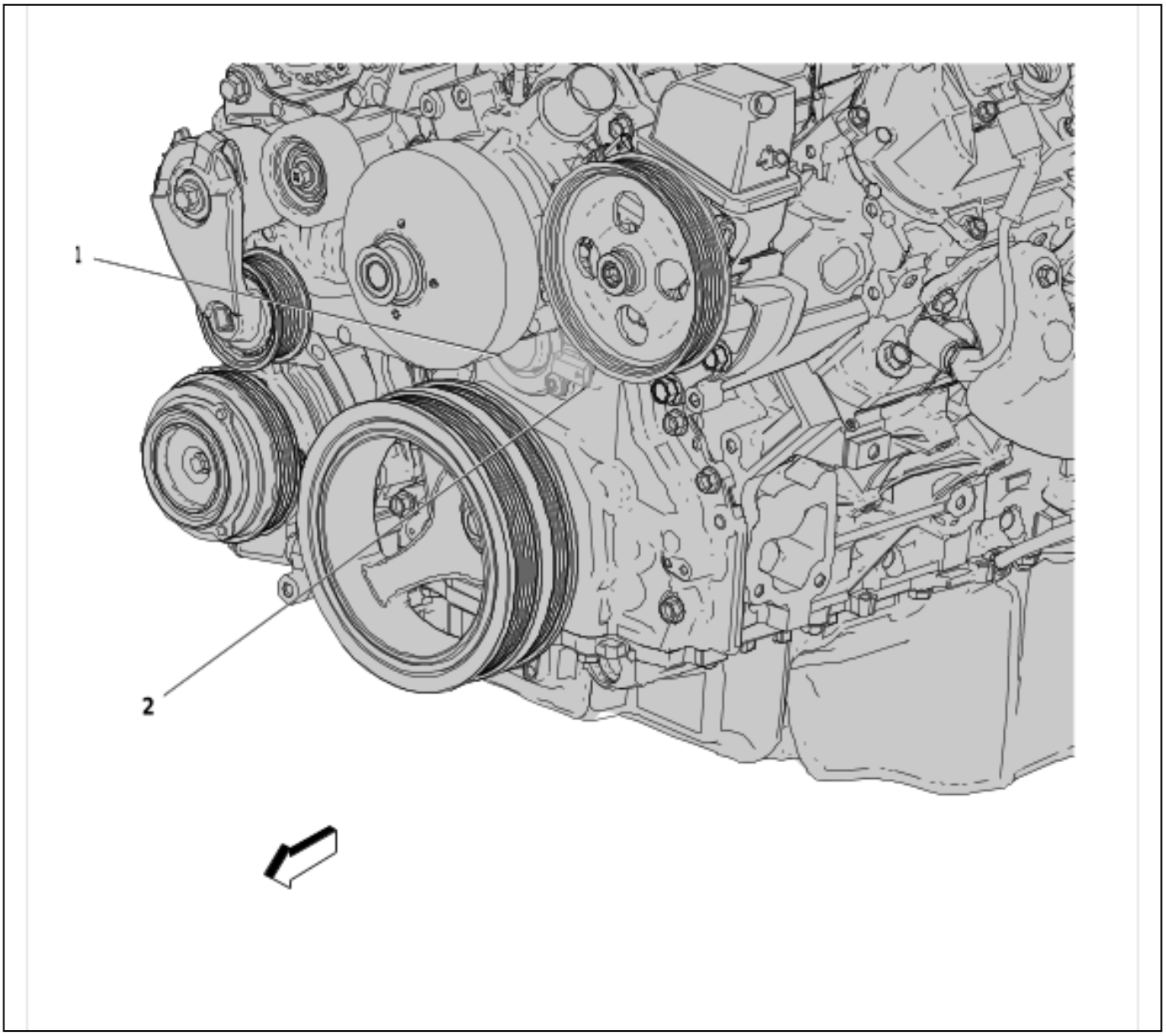

6991617

Items
(1) Q6 Camshaft Position Actuator Solenoid Valve
(2) B23 Camshaft Position Sensor

Engine Compartment Components - 5 of 7 (L8T)

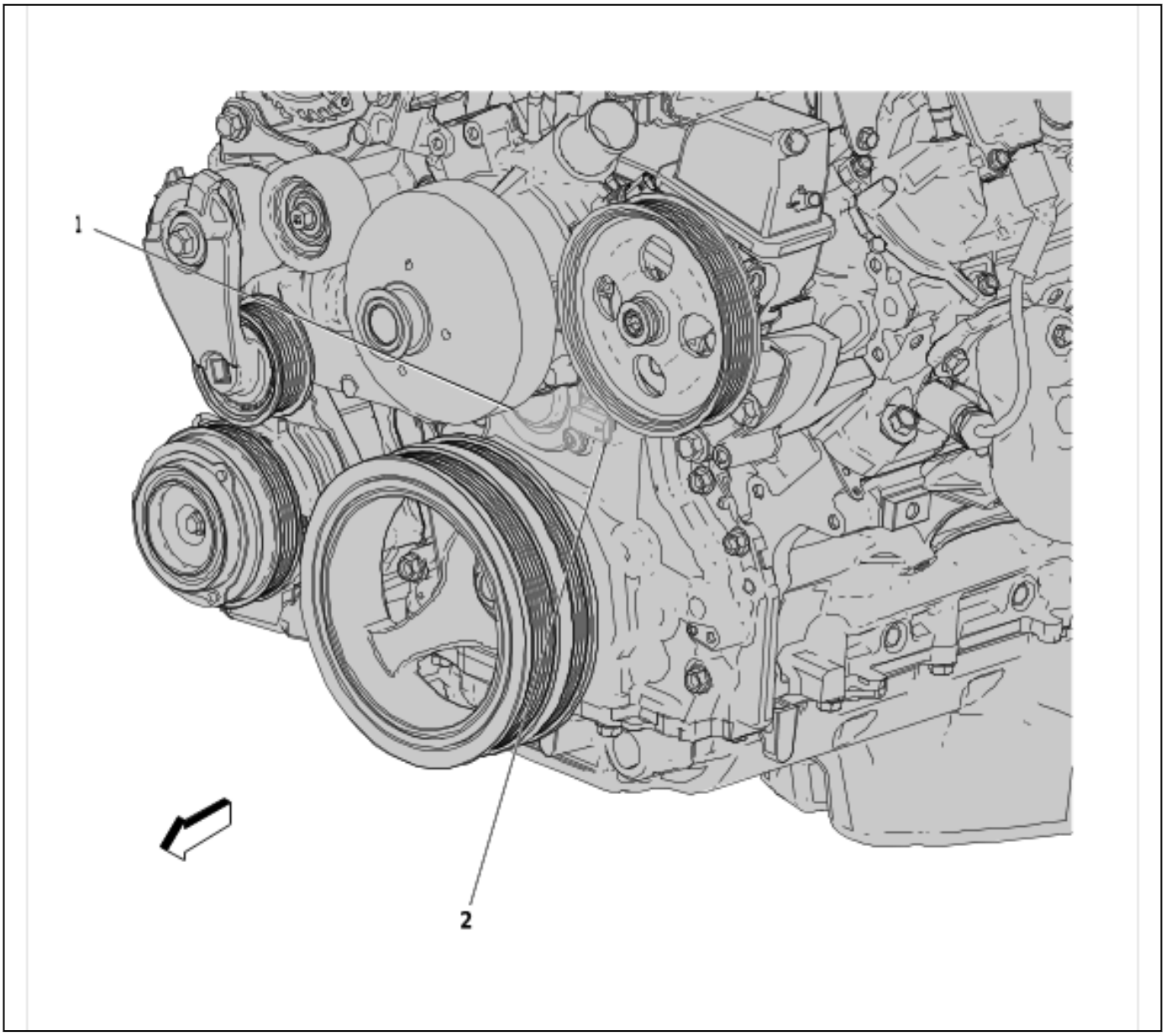

6991618

Items
(1) Q6 Camshaft Position Actuator Solenoid Valve
(2) B23 Camshaft Position Sensor

Engine Compartment Components - 6 of 7

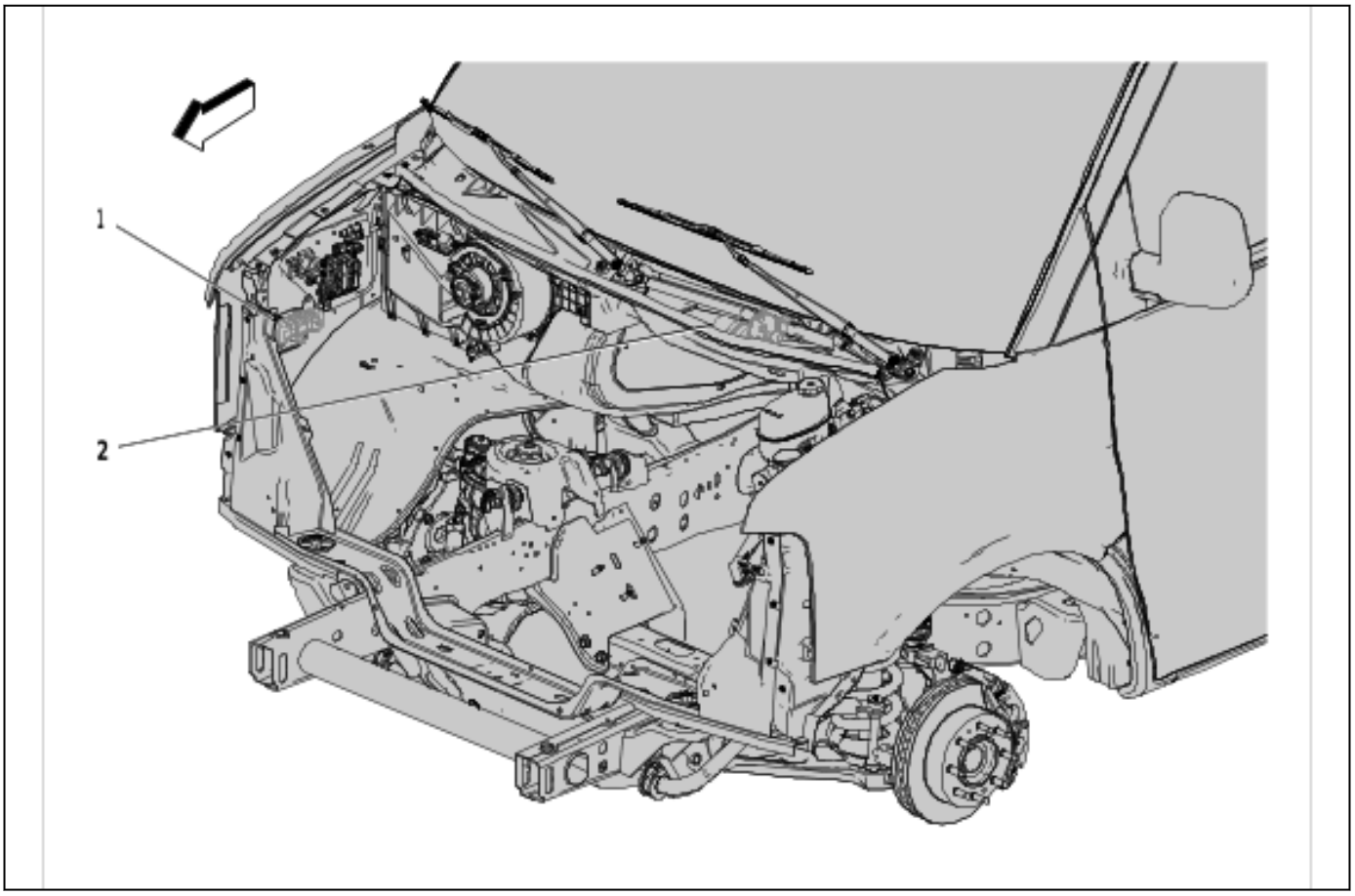

6991619

Items
(1) X55U Fuse Holder - Starter
(2) M75 Windshield Wiper Motor

Engine Compartment Components - 7 of 7

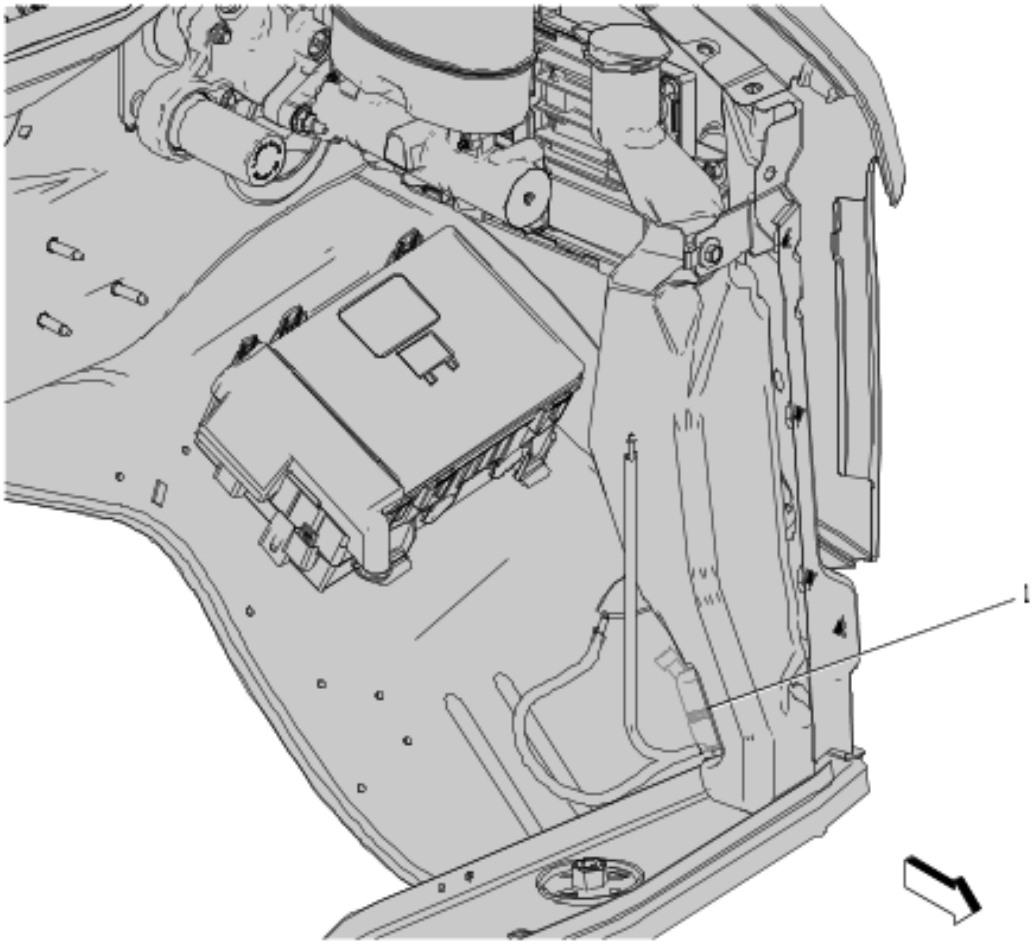

6991620

Items
(1) G24 Windshield Washer Pump

Engine Compartment Components (9L7)

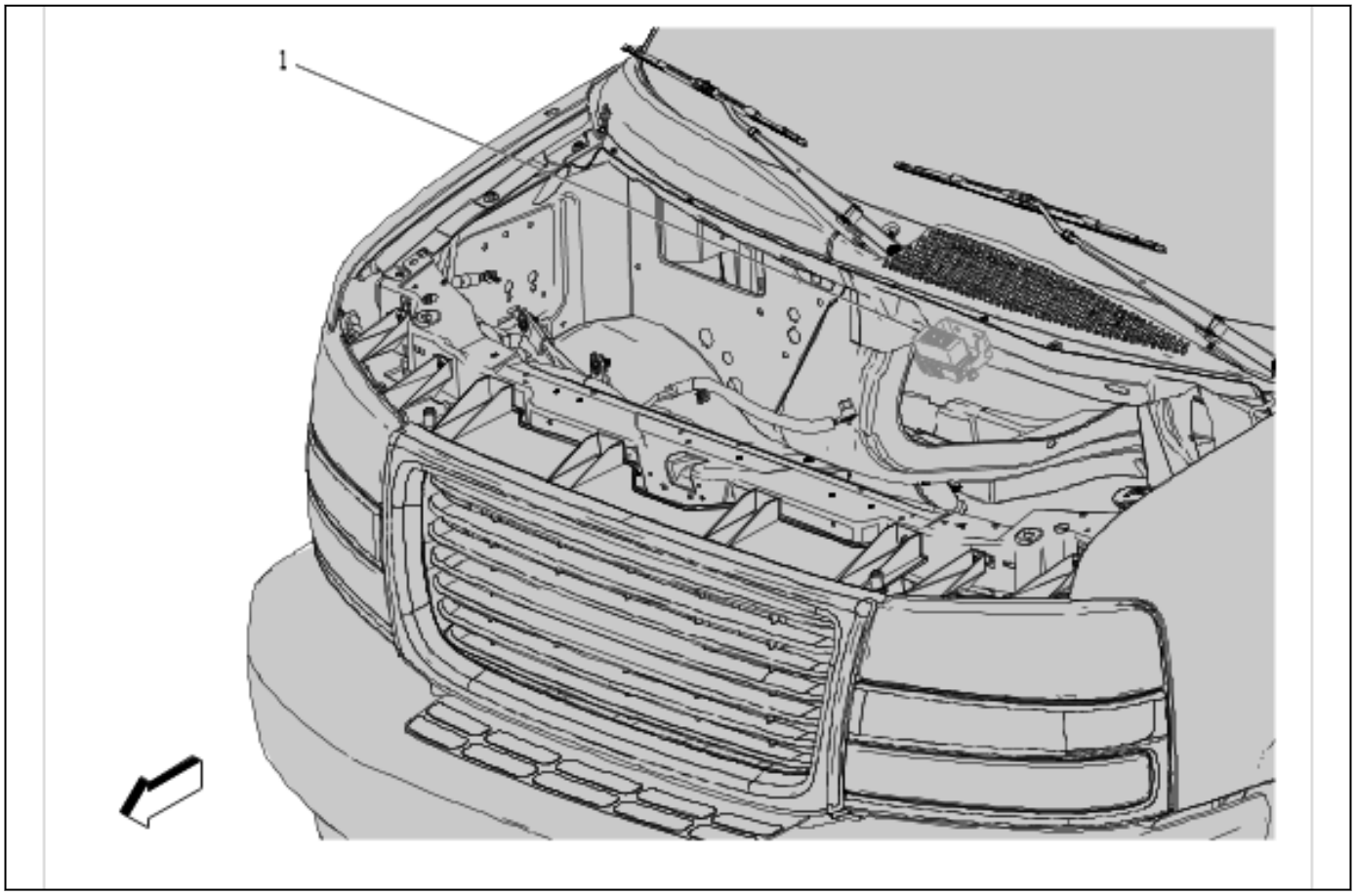

6003005

Items
(1) X50B Fuse Block - Underhood Auxiliary

Top of the Engine Components (LV1)

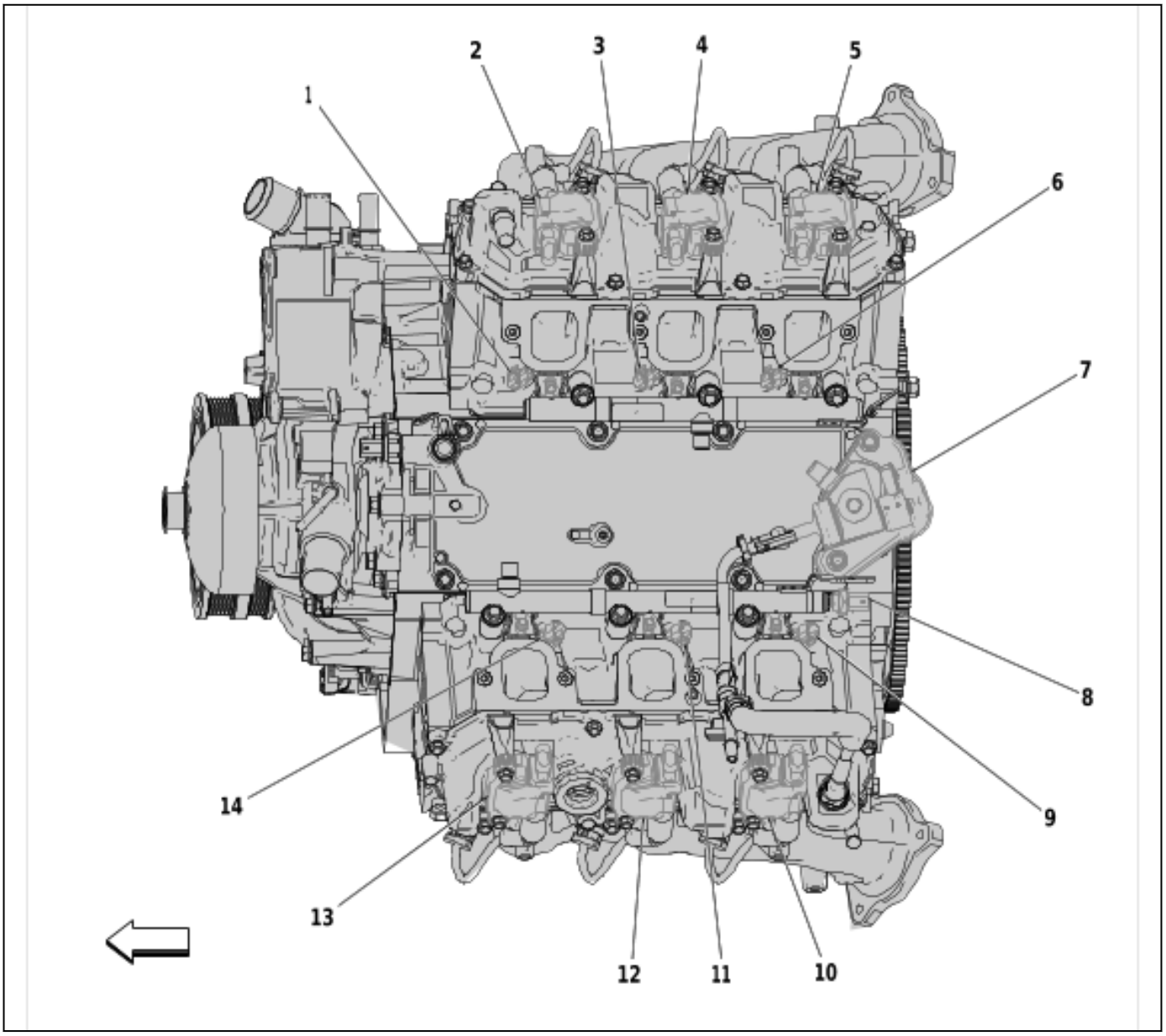

6003006

Items
(1) Q17B Fuel Injector 2
(2) T8B Ignition Coil 2
(3) Q17D Fuel Injector 4
(4) T8D Ignition Coil 4
(5) T8F Ignition Coil 6
(6) Q17F Fuel Injector 6
(7) G18 High Pressure Fuel Pump (LV1/L8T)
(8) B47B Fuel Rail Pressure Sensor
(9) Q17E Fuel Injector 5
(10) T8E Ignition Coil 5
(11) Q17C Fuel Injector 3
(12) T8C Ignition Coil 3

Items
(13) T8A Ignition Coil 1
(14) Q17A Fuel Injector 1

Front of the Engine Components (LV1)

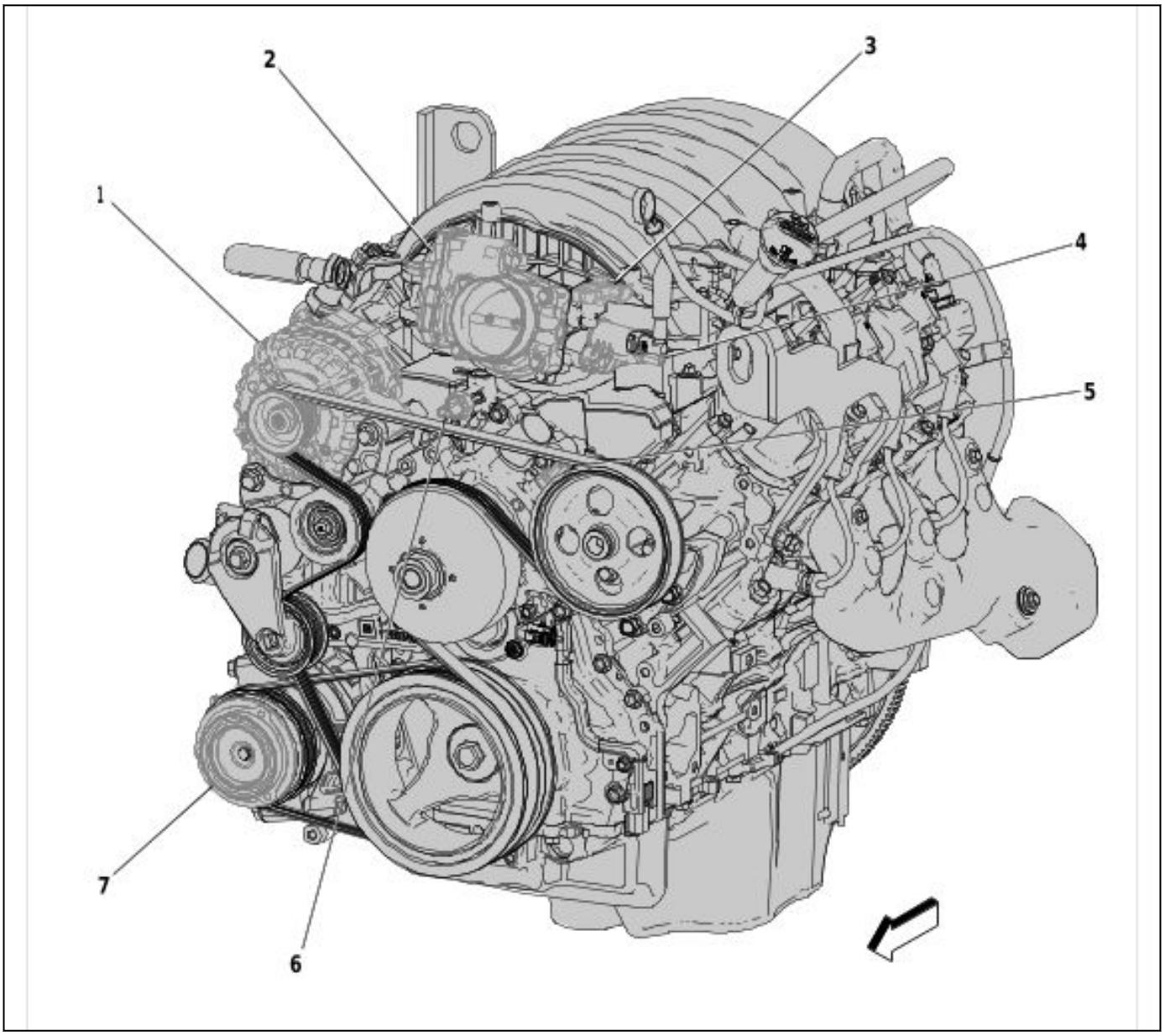

6003007

Items
(1) G13 Generator (K68/KG4/KW5)
(2) Q38 Throttle Body
(3) B74 Manifold Absolute Pressure Sensor
(4) Q12 Evaporative Emission Purge Solenoid Valve
(5) B34 Engine Coolant Temperature Sensor (L8T/LV1)
(6) B37B Engine Oil Pressure Sensor (L8T/LV1)
(7) Q2 A/C Compressor Clutch

Lower Right Rear of the Engine Components (LV1)

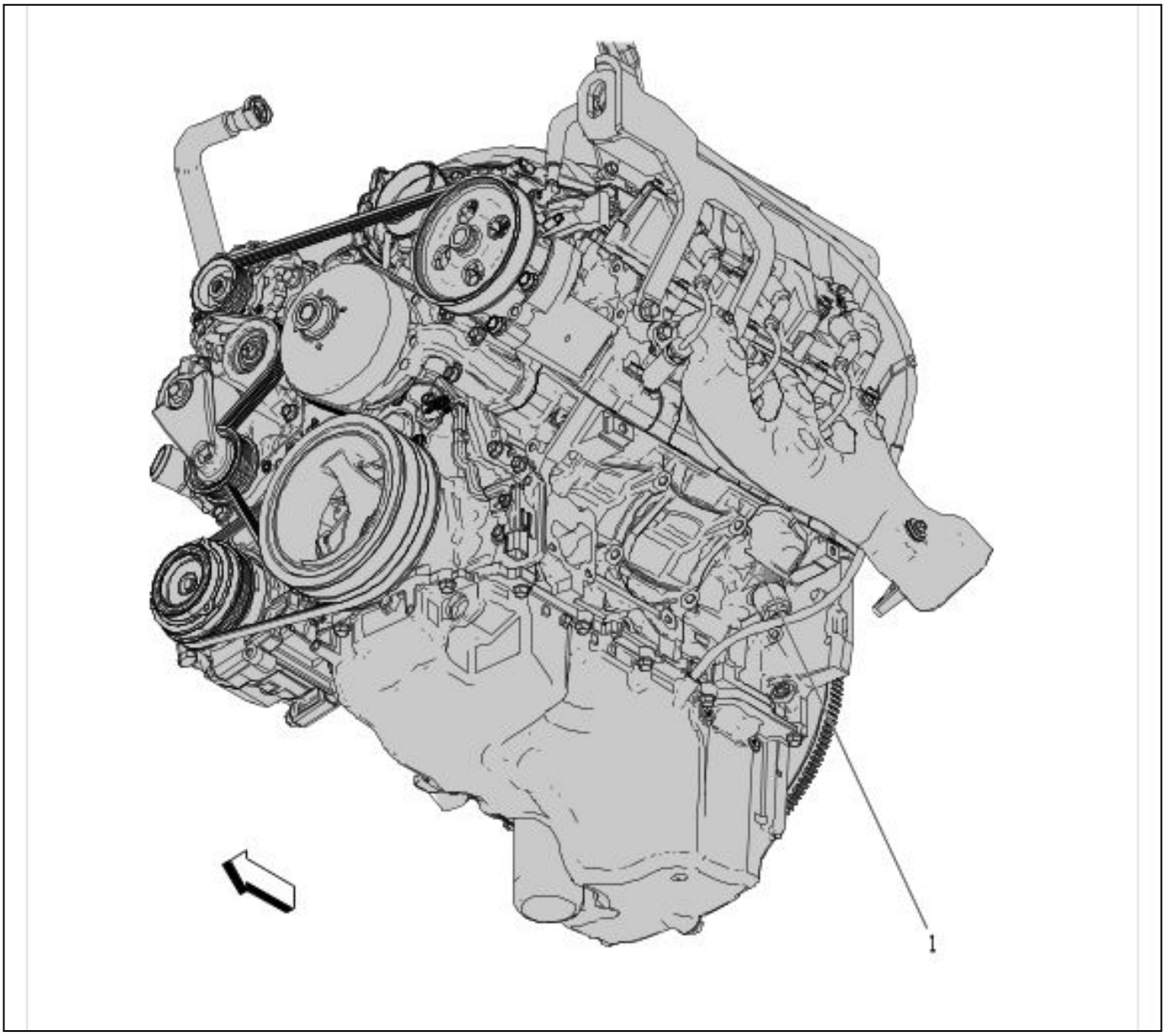

6003008

Items
(1) B68A Knock Sensor 1

Lower Left Rear of the Engine Components (LV1)

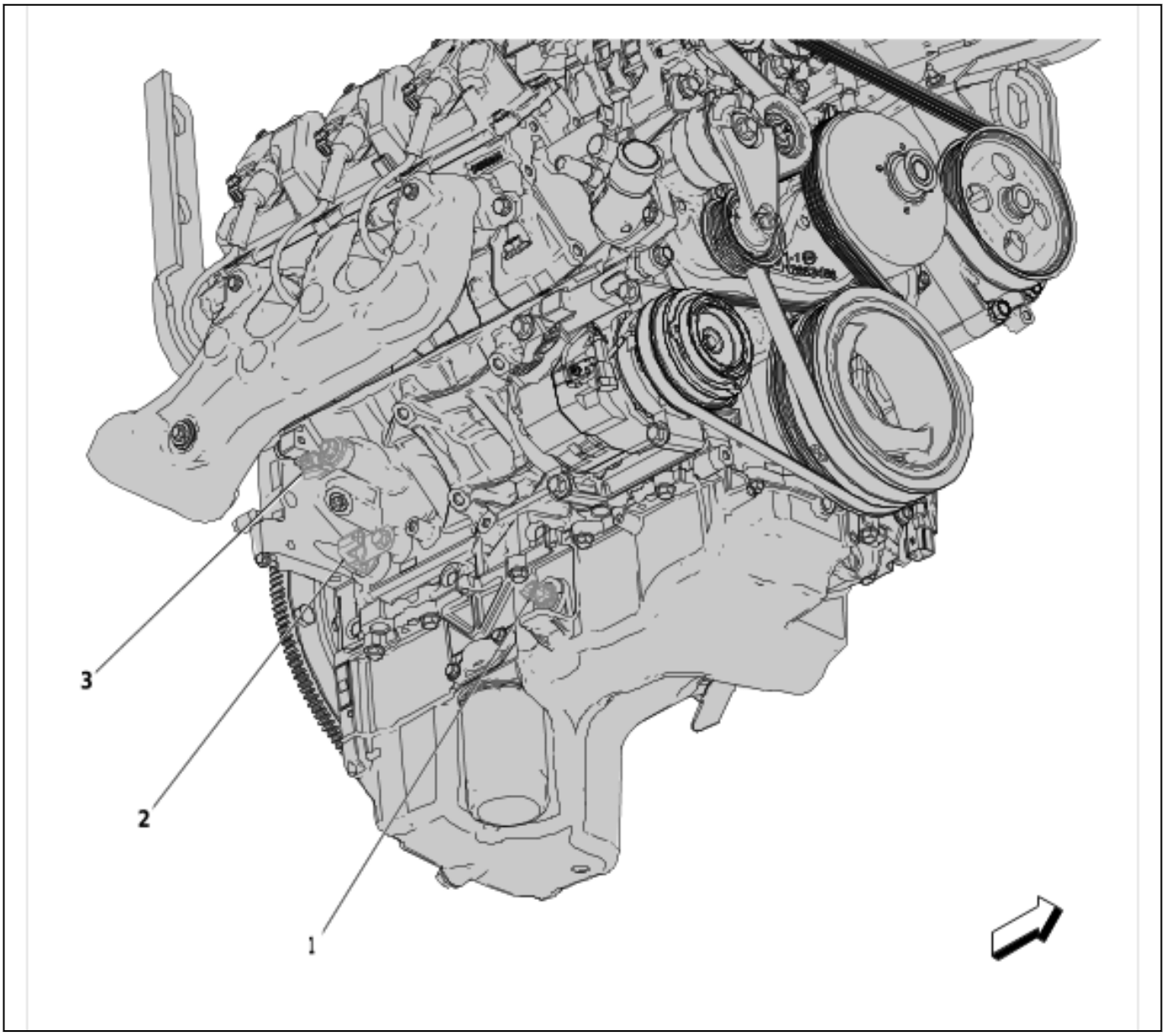

6003010

Items
(1) B35 Engine Oil Level Switch (L8T/LV1)
(2) B26 Crankshaft Position Sensor
(3) B68B Knock Sensor 2

Rear of the Engine Components (LV1)

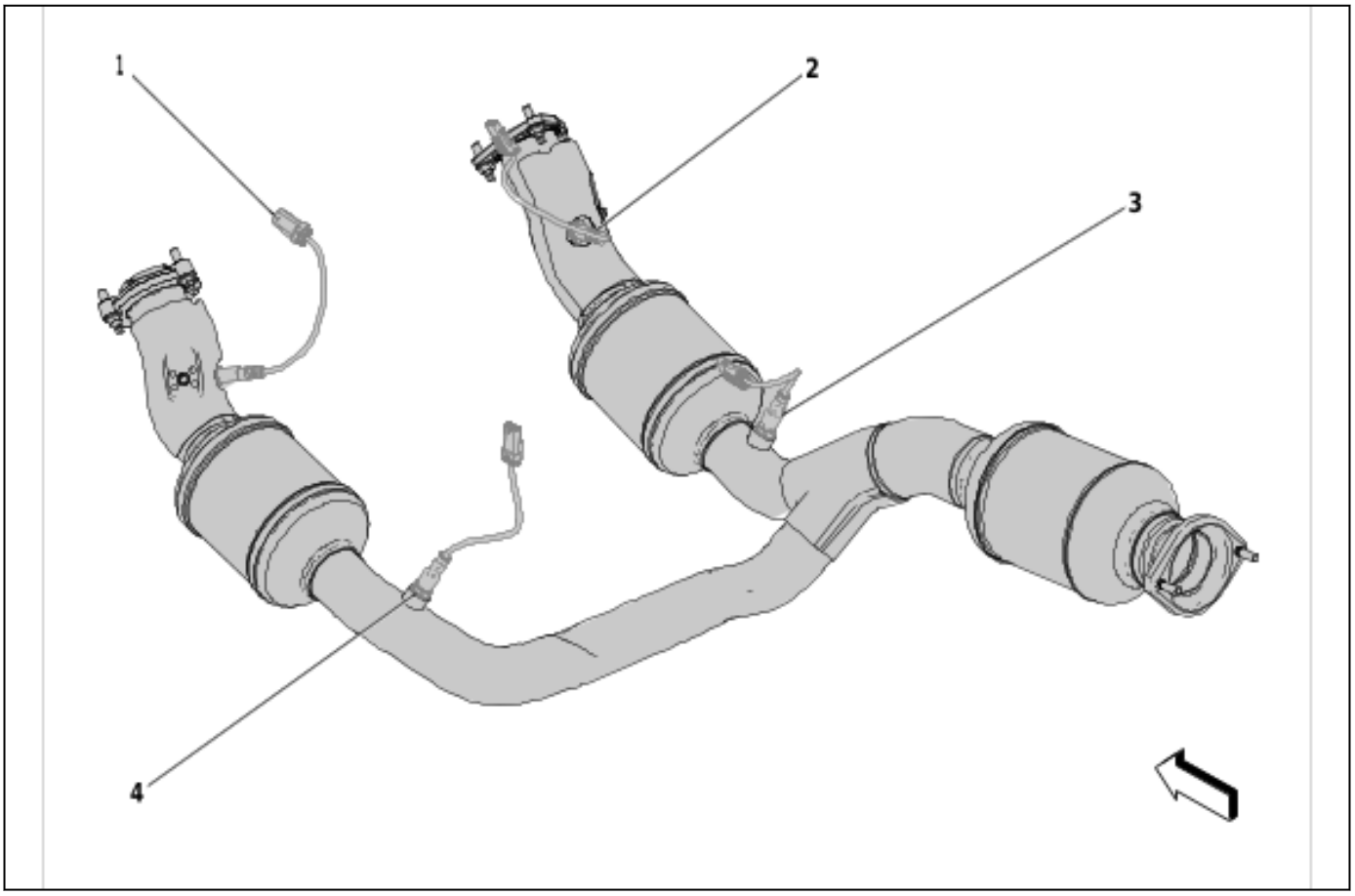

6003011

Items
(1) B52C Heated Oxygen Sensor - Bank 1 Sensor 1
(2) B52E Heated Oxygen Sensor - Bank 2 Sensor 1
(3) B52F Heated Oxygen Sensor - Bank 2 Sensor 2
(4) B52D Heated Oxygen Sensor - Bank 1 Sensor 2

Top of Engine Components (L8T)

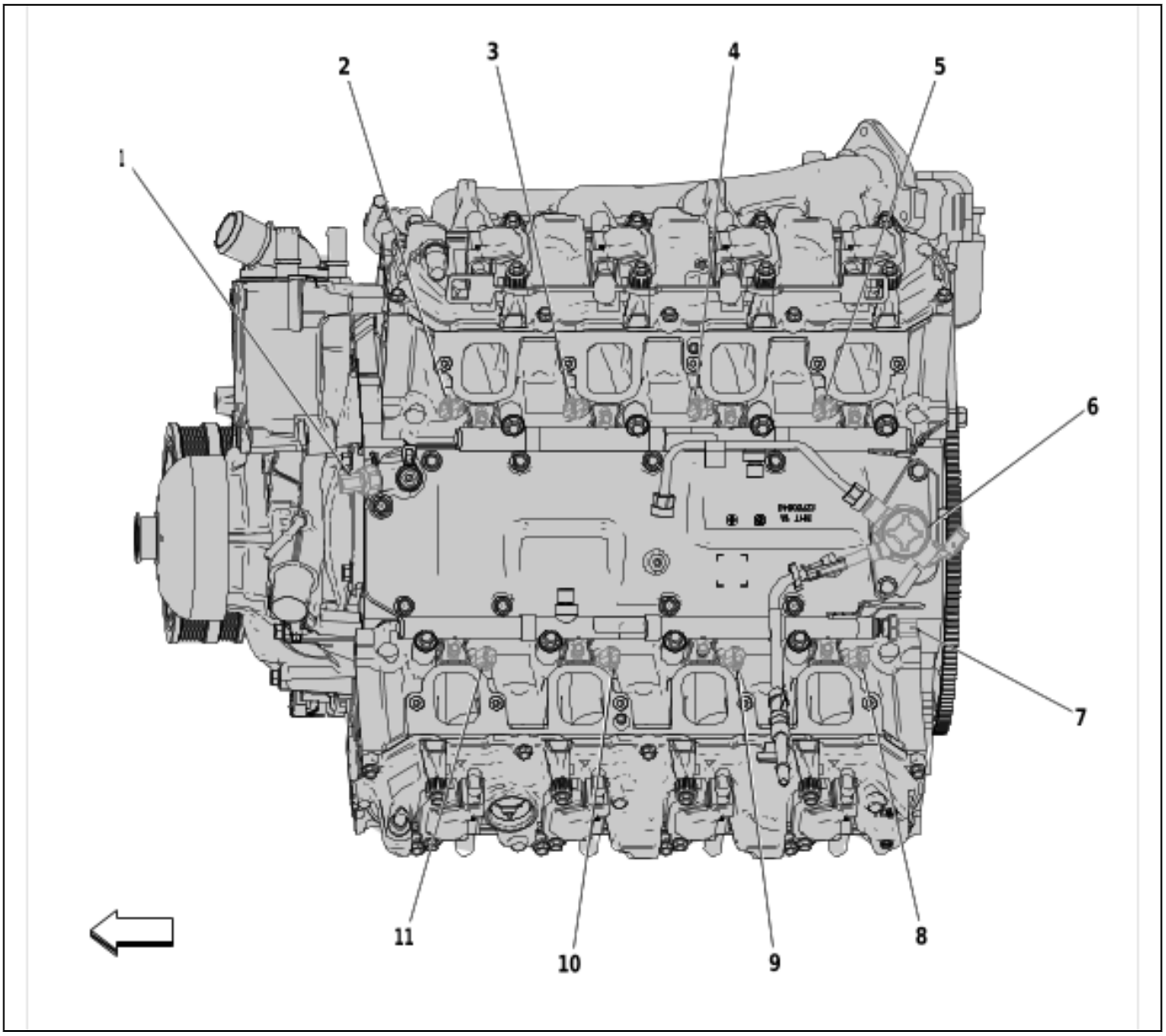

6040675

Items
(1) B37B Engine Oil Pressure Sensor (L8T/LV1)
(2) Q17B Fuel Injector 2
(3) Q17D Fuel Injector 4
(4) Q17F Fuel Injector 6
(5) Q17H Fuel Injector 8
(6) G18 High Pressure Fuel Pump (LV1/L8T)
(7) B47B Fuel Rail Pressure Sensor
(8) Q17G Fuel Injector 7
(9) Q17E Fuel Injector 5
(10) Q17C Fuel Injector 3
(11) Q17A Fuel Injector 1

Left Side of the Engine Components (L8T)

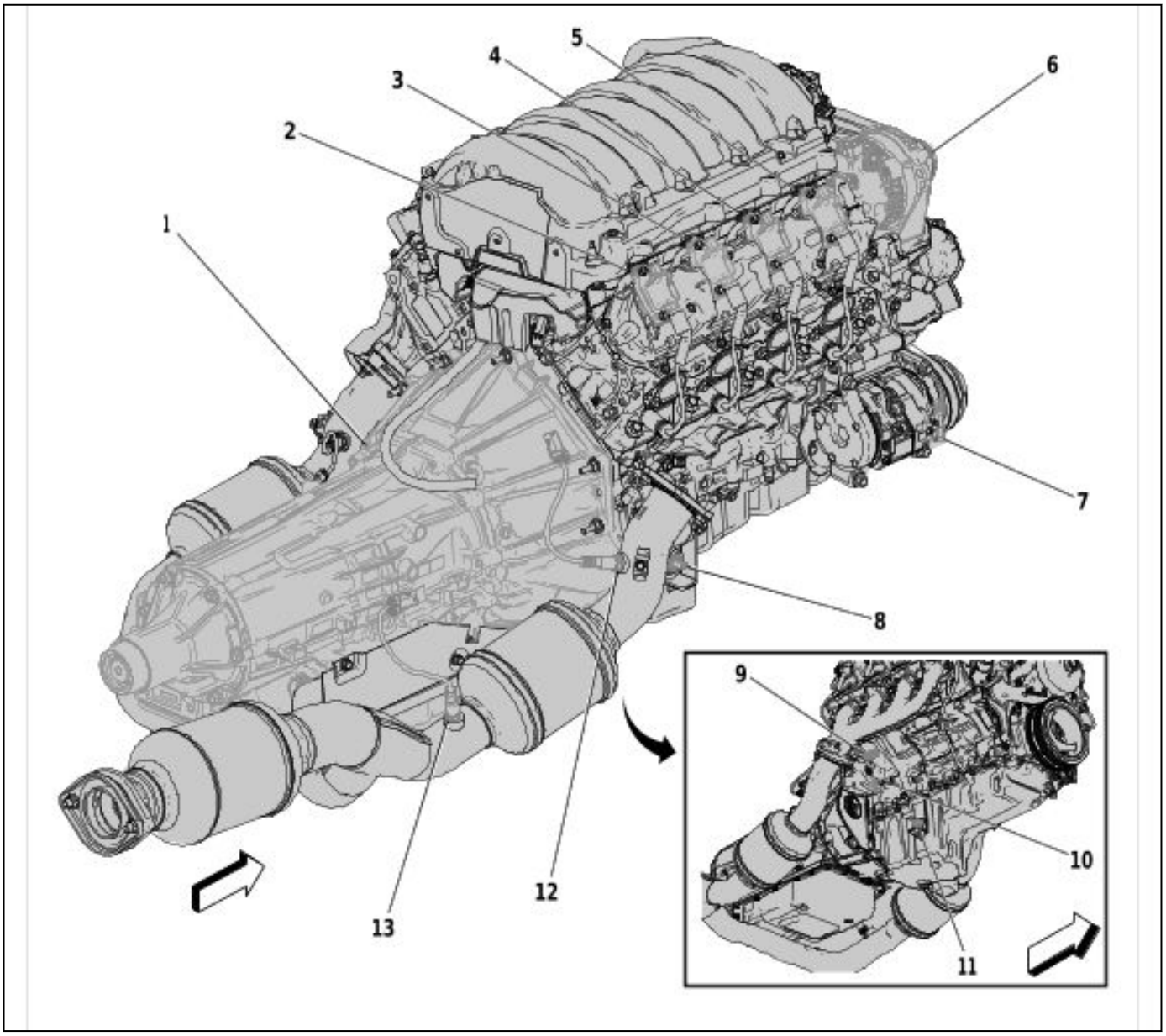

6040676

Items
(1) T12 Automatic Transmission Assembly
(2) T8H Ignition Coil 8
(3) T8F Ignition Coil 6
(4) T8D Ignition Coil 4
(5) T8B Ignition Coil 2
(6) G13 Generator (K68/KG4/KW5)
(7) Q2 A/C Compressor Clutch
(8) B35 Engine Oil Level Switch (L8T/LV1)
(9) B68B Knock Sensor 2
(10) B26 Crankshaft Position Sensor
(11) B35 Engine Oil Level Switch (L8T/LV1)

Items
(12) B52E Heated Oxygen Sensor - Bank 2 Sensor 1
(13) B52F Heated Oxygen Sensor - Bank 2 Sensor 2

Right Side of the Engine Components (L8T)

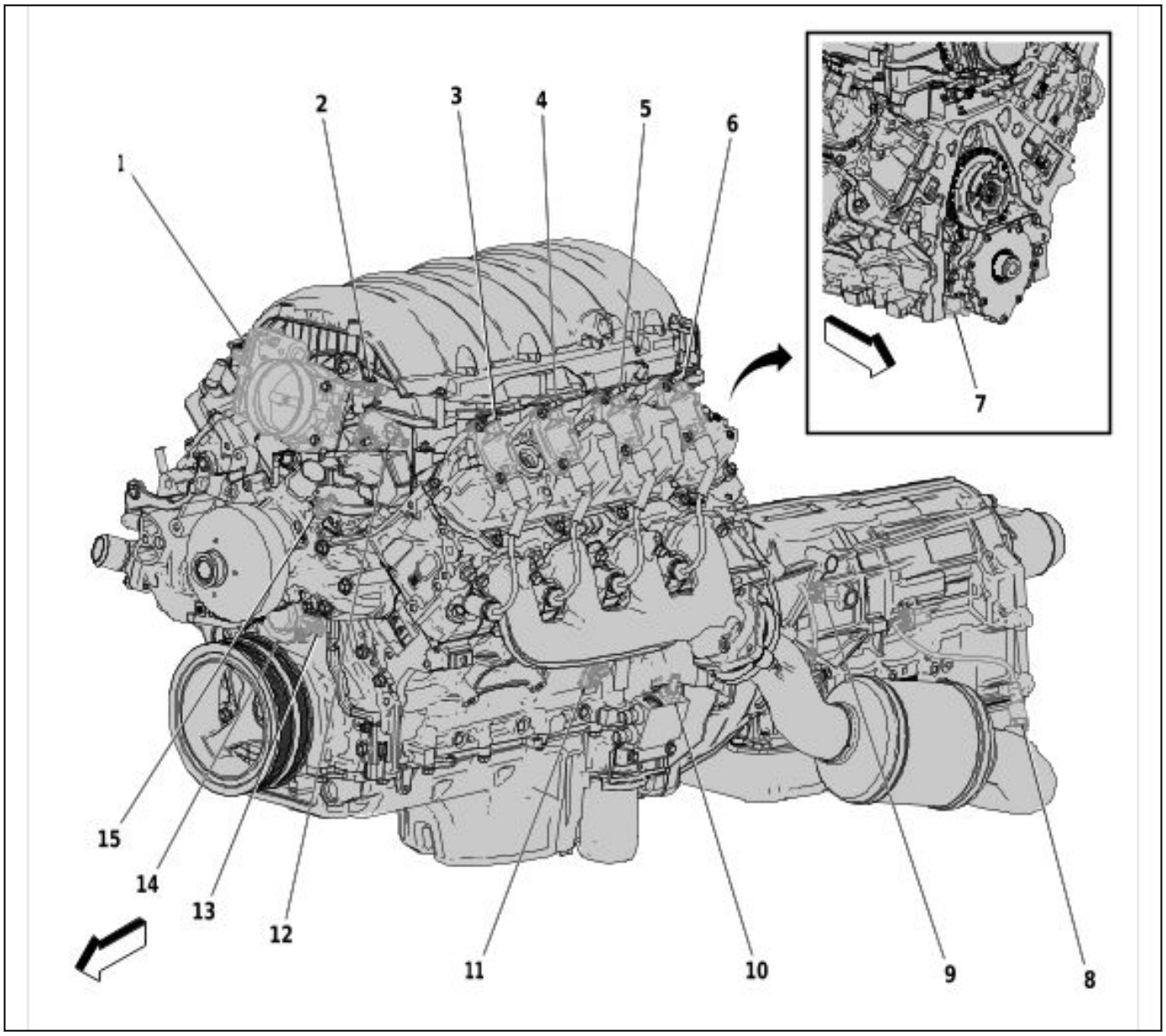

6991474

Items
(1) Q38 Throttle Body
(2) B74 Manifold Absolute Pressure Sensor
(3) T8A Ignition Coil 1
(4) T8C Ignition Coil 3
(5) T8E Ignition Coil 5
(6) T8G Ignition Coil 7
(7) Q44 Engine Oil Pressure Control Solenoid Valve
(8) B52D Heated Oxygen Sensor - Bank 1 Sensor 2

Items
(9) B52C Heated Oxygen Sensor - Bank 1 Sensor 1
(10) B36 Engine Oil Temperature Sensor
(11) B68A Knock Sensor 1
(12) Q12 Evaporative Emission Purge Solenoid Valve
(13) B23 Camshaft Position Sensor
(14) Q6 Camshaft Position Actuator Solenoid Valve
(15) B34 Engine Coolant Temperature Sensor (L8T/LV1)

Automatic Transmission Internal Electrical Components

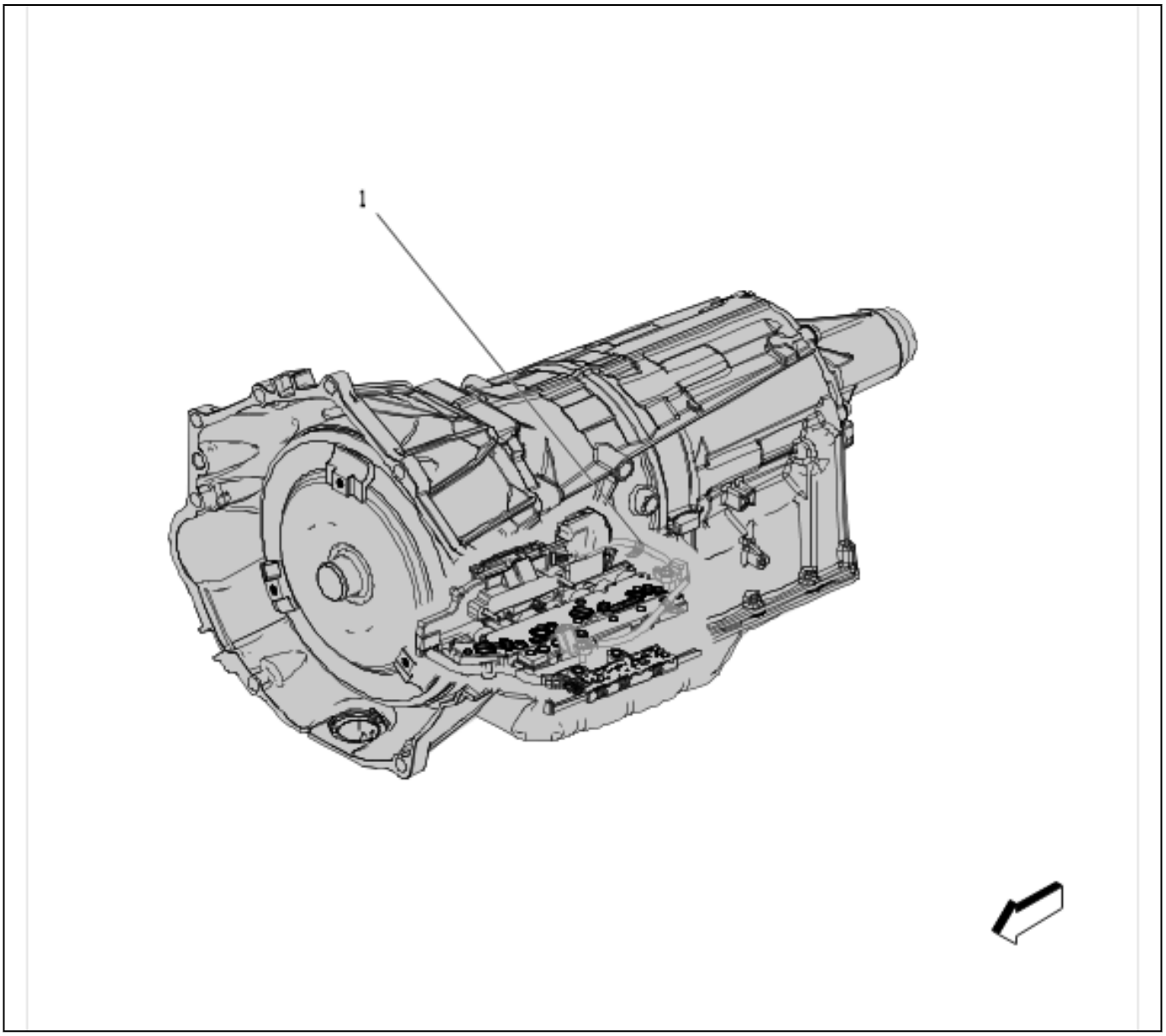

6326441

Items
(1) B14A Transmission Output Shaft Speed Sensor

Instrument Panel Components - 1 of 2

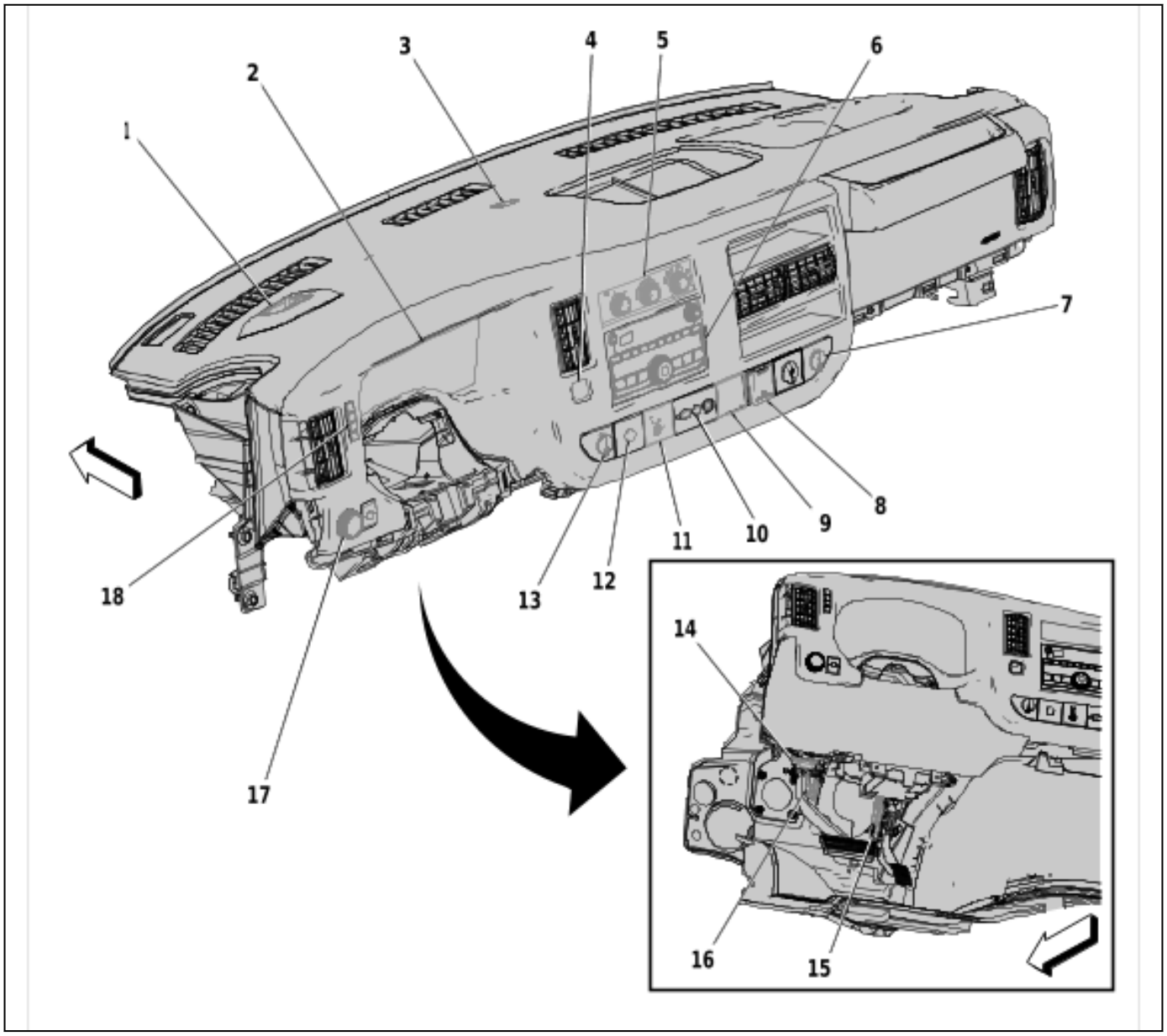

6991475

Items
(1) P43 Collision Alert Indicators
(2) P16 Instrument Cluster
(3) B10 Ambient Light Sensor
(4) S74 Tow/Haul Mode Switch
(5) S34 HVAC Controls Switch Assembly
(6) A11 Radio
(7) X80B Accessory Power Receptacle - Center Console 2
(8) X81 Accessory Power Receptacle - 110V AC (KI4)
(9) S155 Lane Departure Warning Switch
(10) S51 Telematics Button Assembly
(11) S40 Passenger Air Bag Disable Switch
(12) S75 Traction Control Switch

Items
(13) X80A Accessory Power Receptacle - Center Console 1
(14) X84 Data Link Connector
(15) B107 Accelerator Pedal Position Sensor
(16) B22 Brake Pedal Position Sensor
(17) S30 Headlamp Switch
(18) S16 Driver Information Center Switch

Instrument Panel Components - 2 of 2

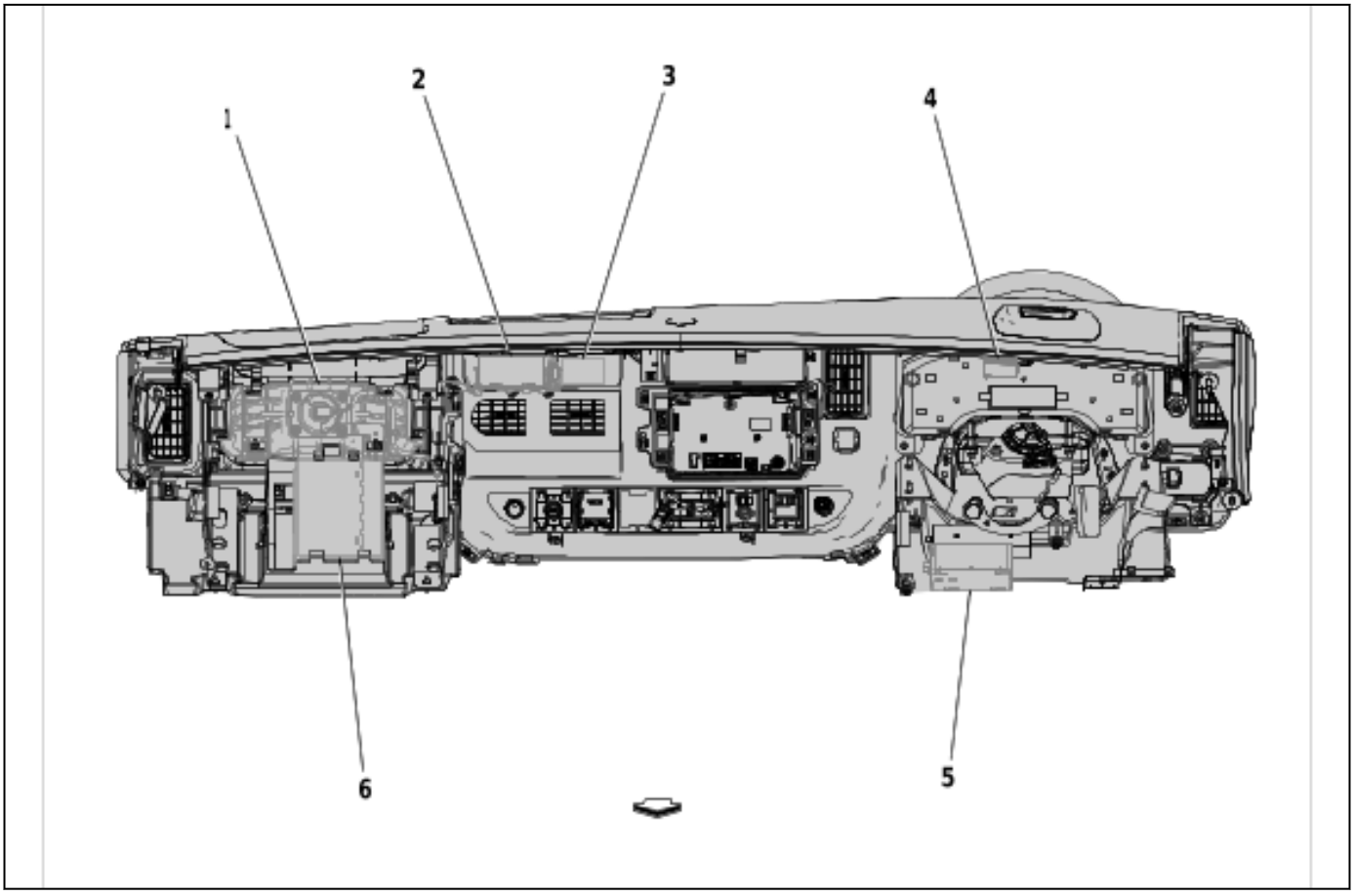

6505749

Items
(1) F101 Passenger Instrument Panel Air Bag
(2) T1 Accessory DC/AC Power Inverter Module
(3) K182 Parking Assist Control Module
(4) K77 Remote Control Door Lock Receiver
(5) K73 Telematics Communication Interface Control Module
(6) K9 Body Control Module

Steering Column Components - 1 of 3

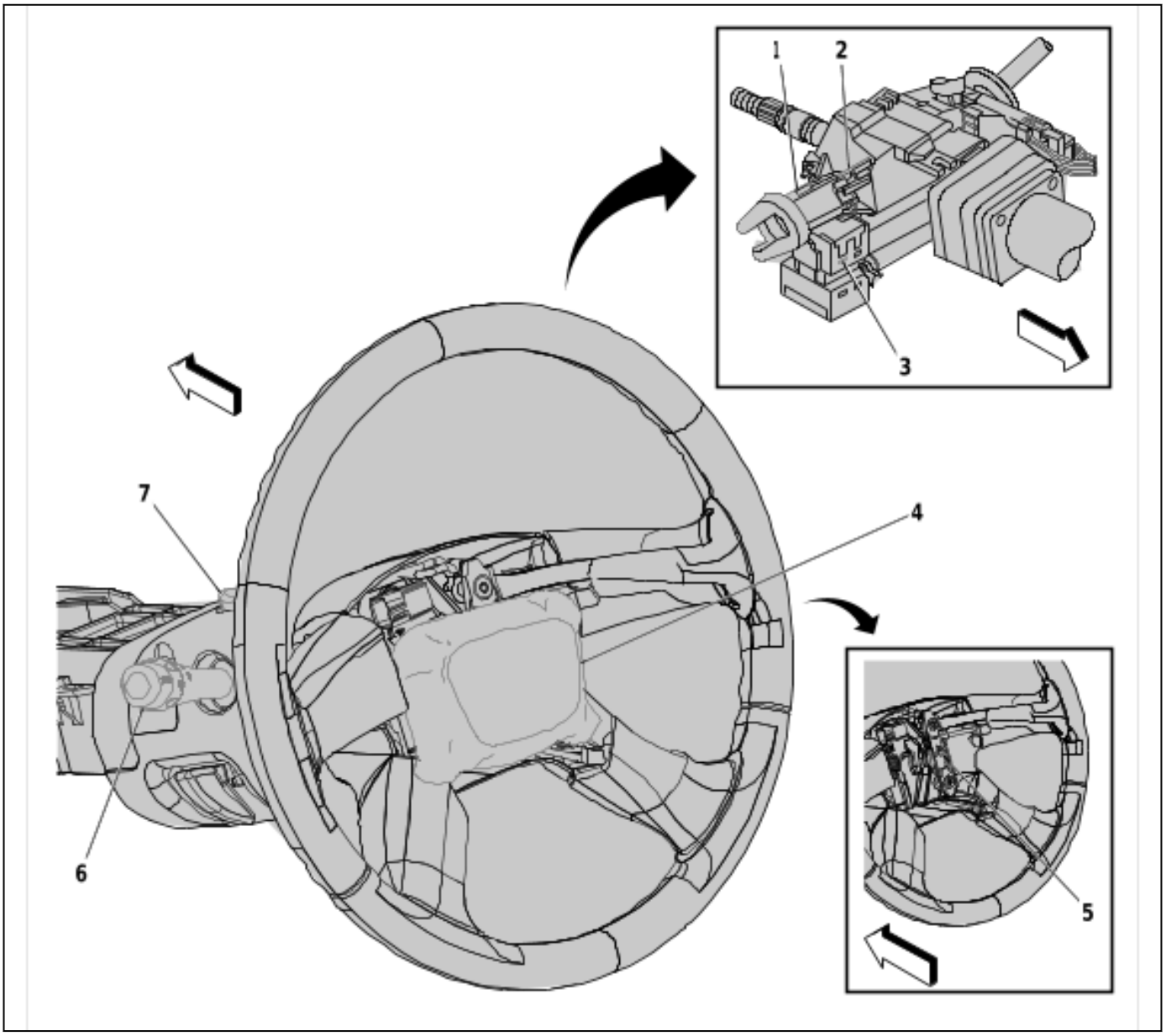

6385159

Items
(1) K64 Content Theft Deterrent Control Module
(2) M7 Transmission Shift Lock Control Solenoid Actuator
(3) S39 Ignition Switch
(4) F107 Steering Wheel Air Bag
(5) S33 Horn Switch
(6) S78 Turn Signal/Multifunction Switch
(7) S26 Hazard Warning Switch

Steering Column Components - 2 of 3

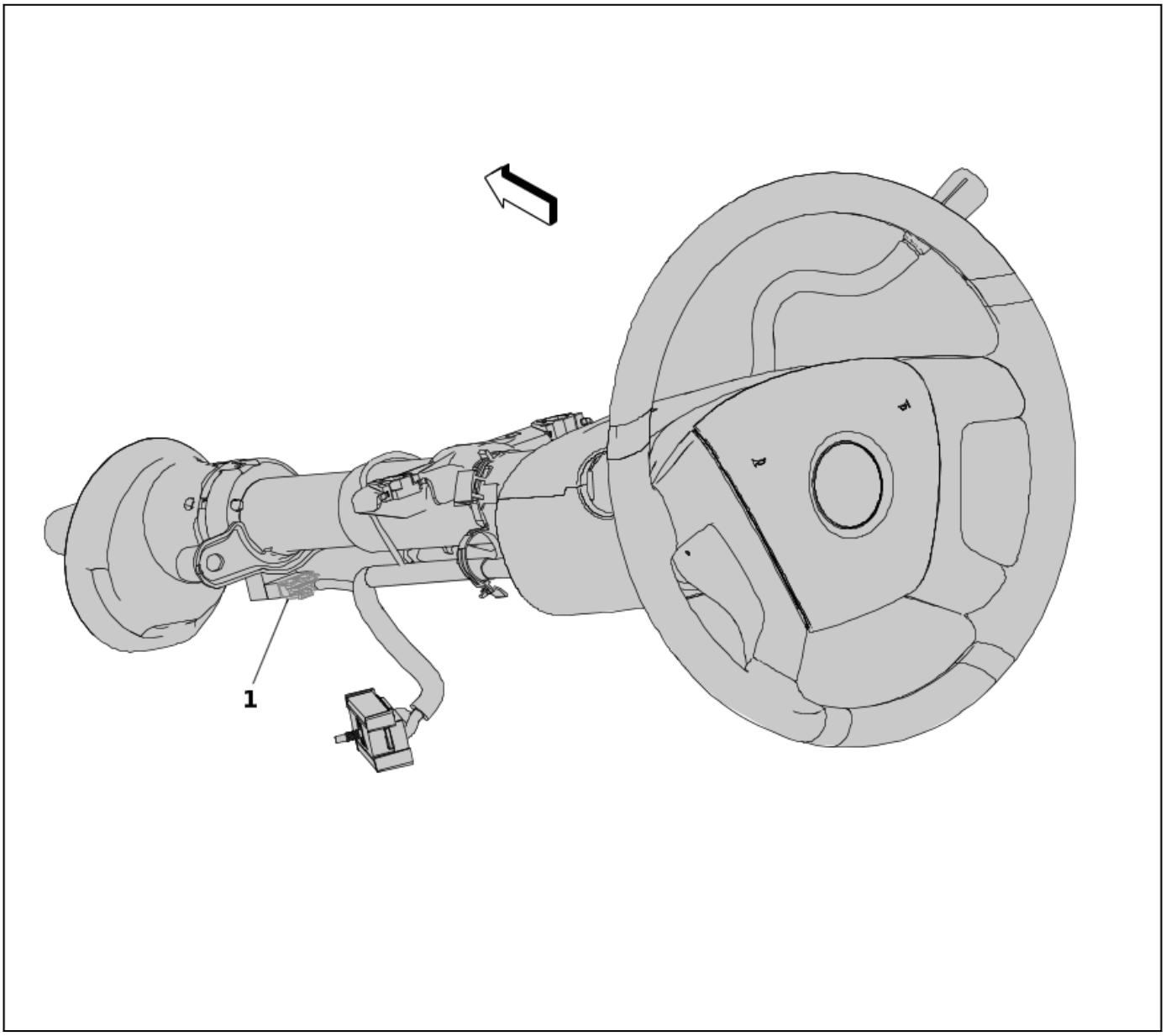

4004007

Items
(1) B99 Steering Wheel Angle Sensor

Steering Column Components - 3 of 3

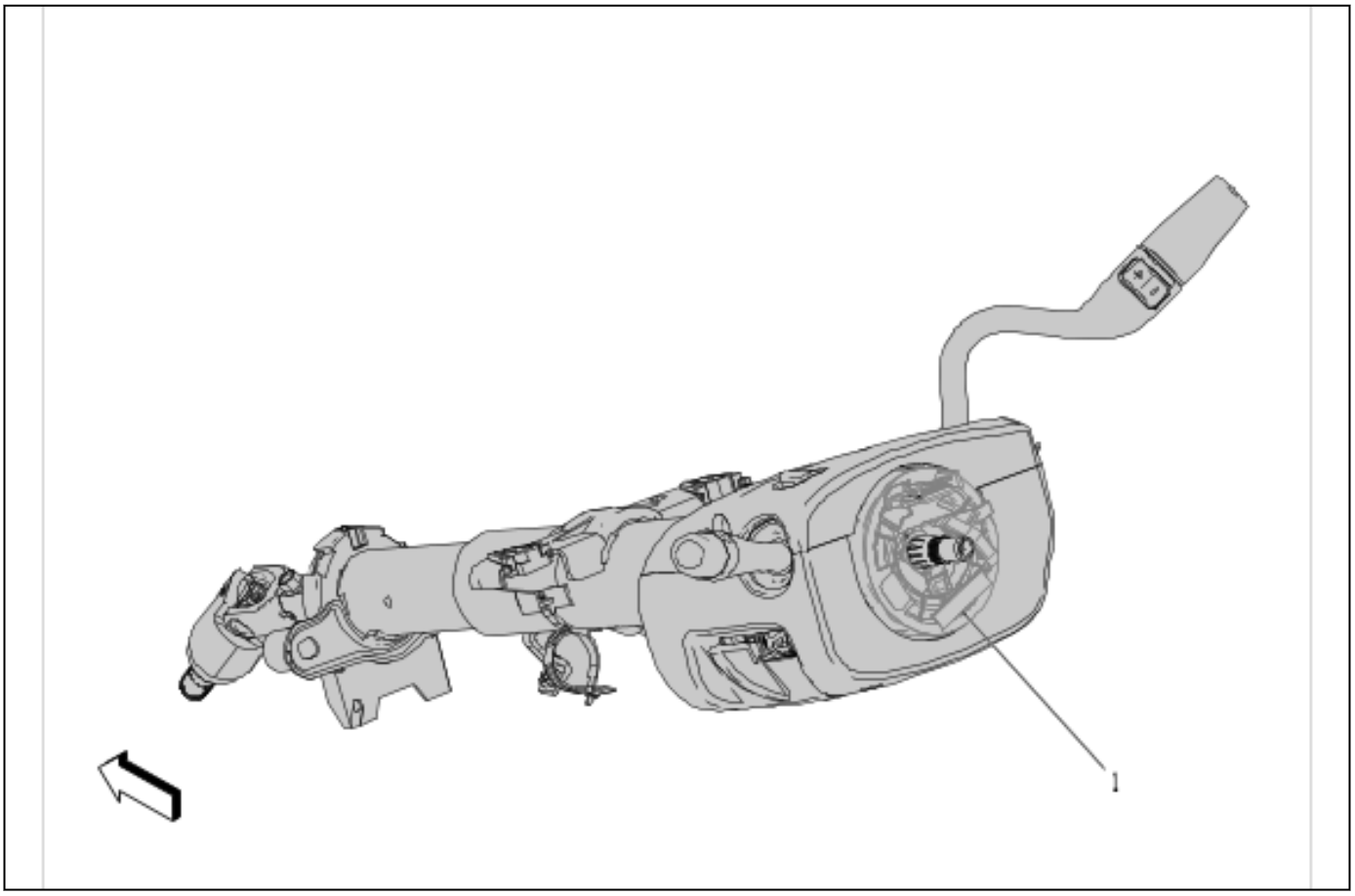

6991622

Items
(1) X85 Steering Wheel Air Bag Coil

HVAC Case Components

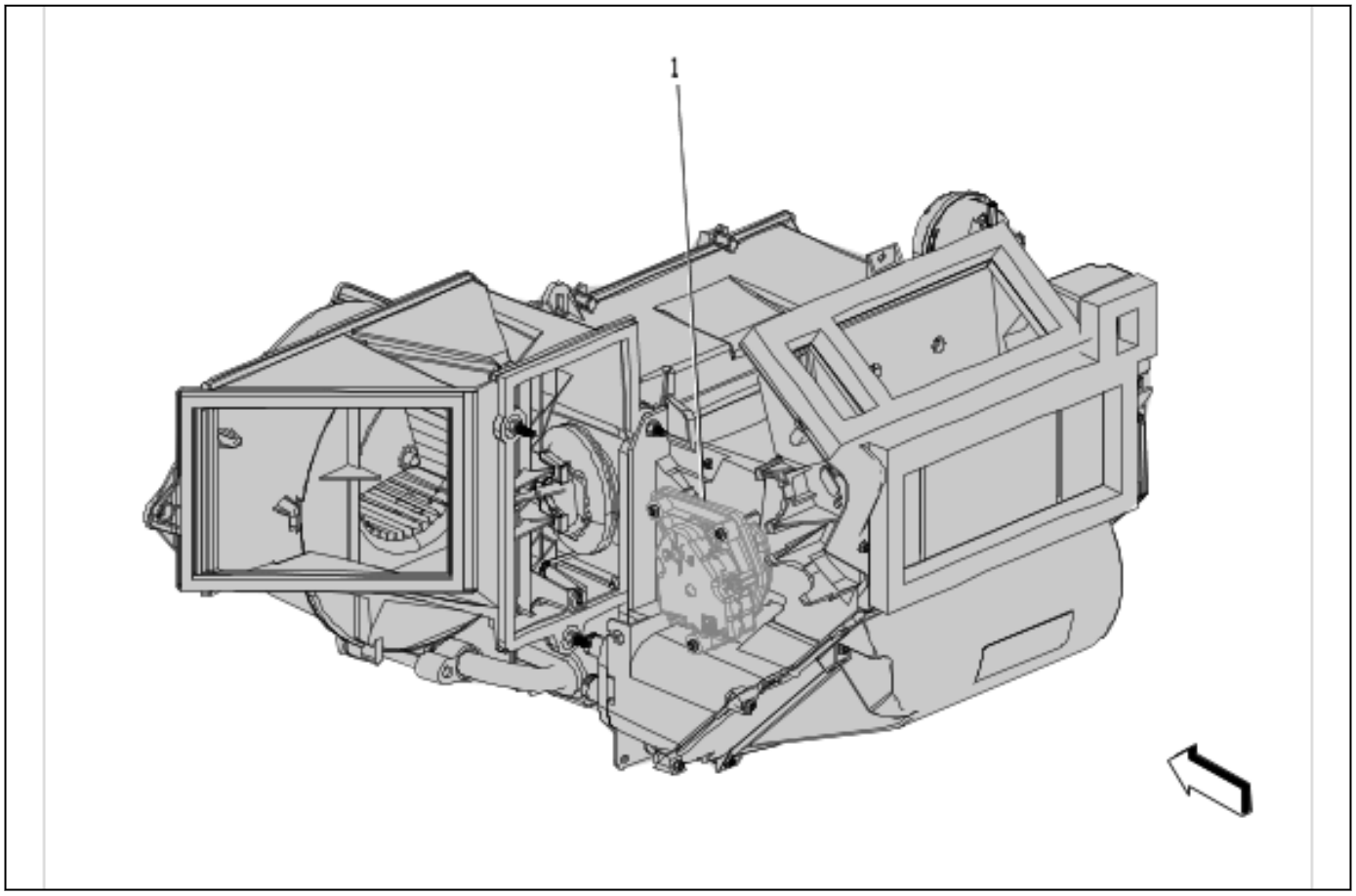

6043575

Items
(1) M6 Air Temperature Door Actuator

Passenger Compartment Components

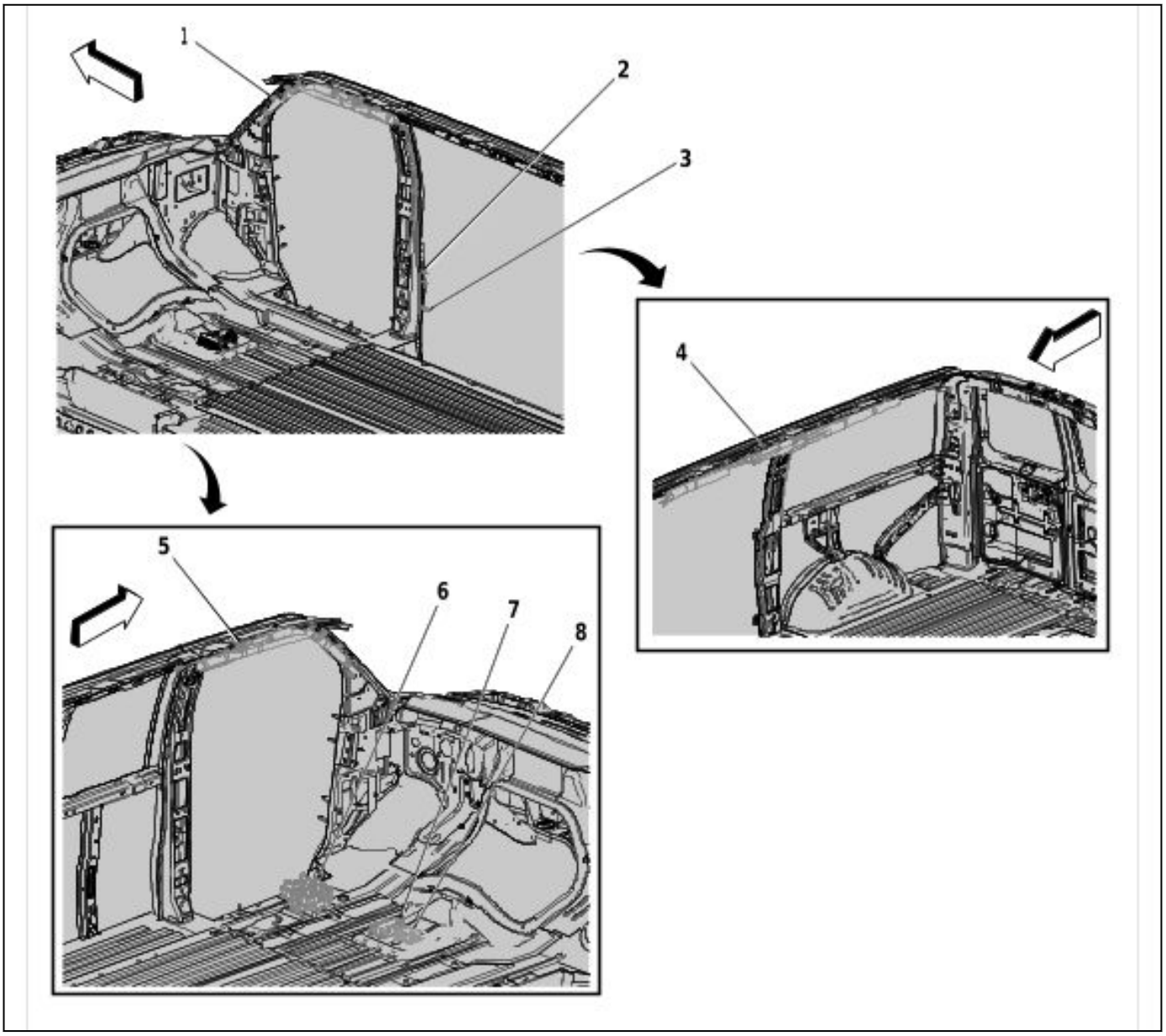

6003018

Items
(1) F105RF Roof Rail Air Bag - Right Front
(2) X87RB Sliding Door Jamb Contact Plate - Right Body
(3) B28RR Door Ajar Switch - Right Rear
(4) F105RR Roof Rail Air Bag - Right Rear
(5) F105LF Roof Rail Air Bag - Left Front
(6) X52A Fuse Block - Passenger Compartment
(7) K36 Inflatable Restraint Sensing and Diagnostic Module
(8) B176 Multi-axis Acceleration Sensor Module

Headliner Components - Front

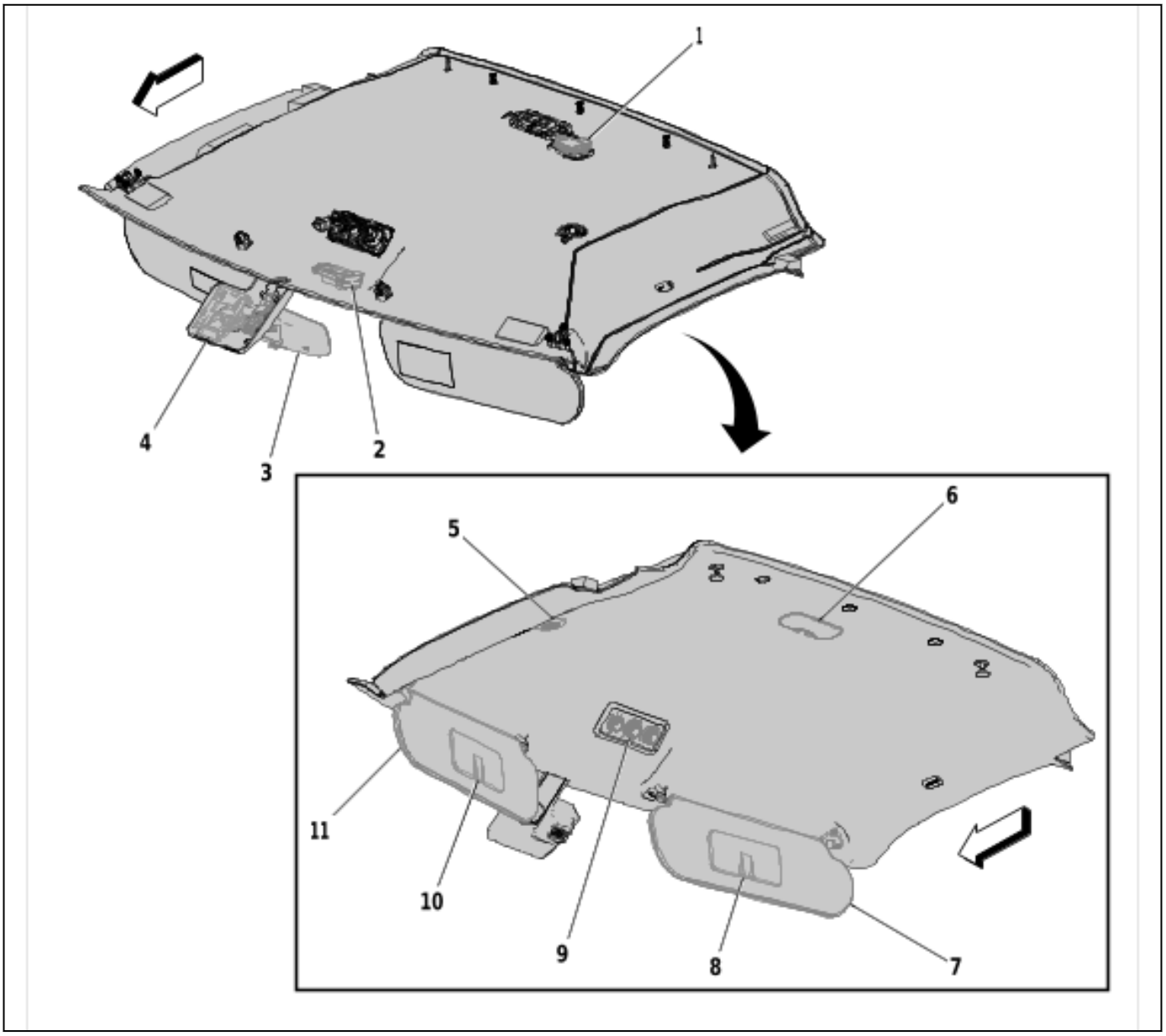

6003016

Items
(1) K18 Compass Module
(2) K33A HVAC Control Module - Auxiliary
(3) A10 Inside Rearview Mirror ((UEU/UFL)/-(UEU/UFL))
(4) B174W Frontview Camera - Windshield
(5) B24 Mobile Telephone Microphone
(6) E37F Dome/Reading Lamps - Front
(7) A3R Sunshade - Right (DH6)
(8) E31R Sunshade Mirror Lamp - Right
(9) S34F HVAC Controls Switch Assembly - Auxiliary Front
(10) E31L Sunshade Mirror Lamp - Left
(11) A3L Sunshade - Left (DH6)

Headliner Components - Rear

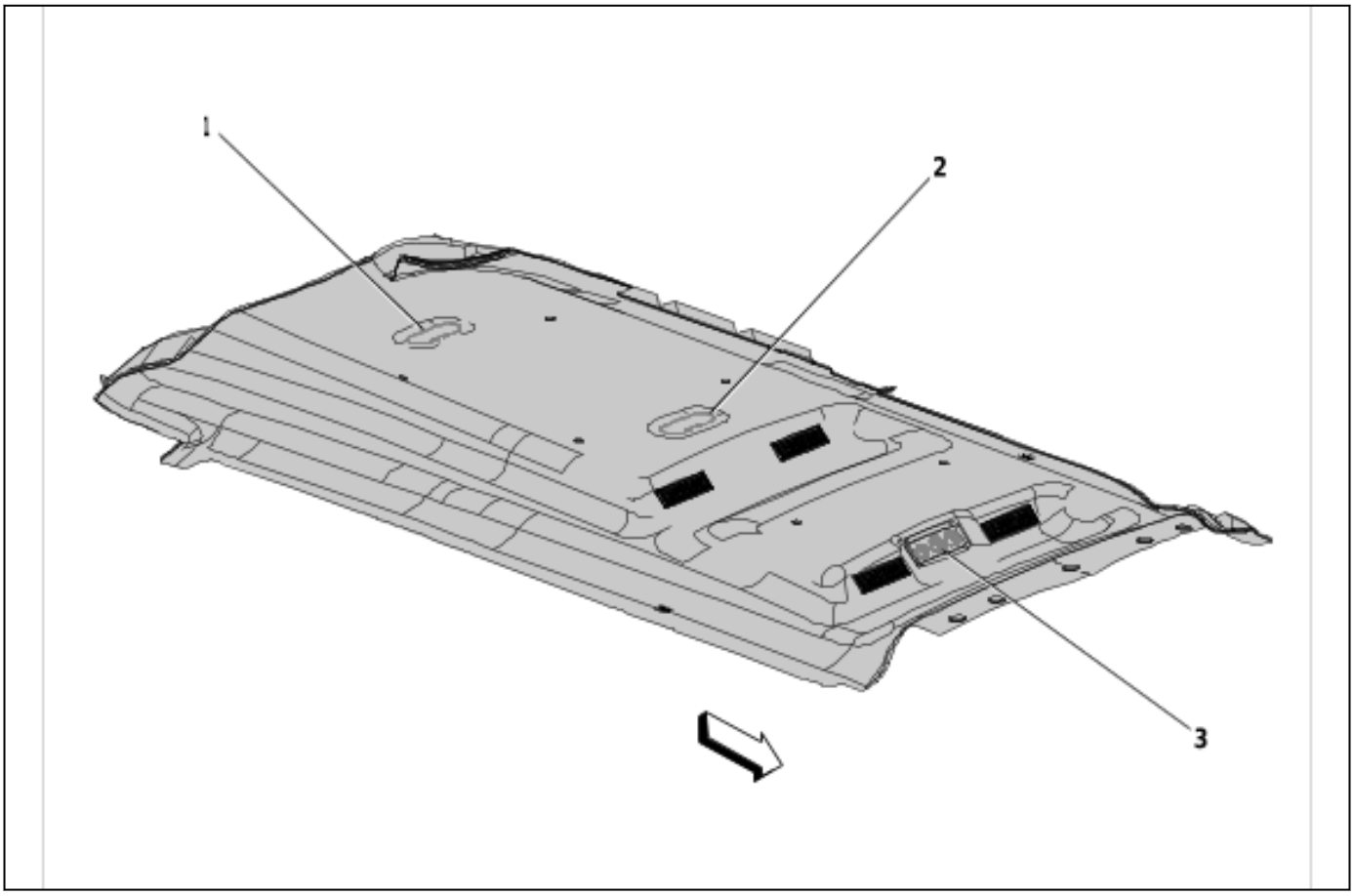

6003017

Items
(1) E37R Dome/Reading Lamps - Rear
(2) E37M Dome/Reading Lamps - Middle
(3) S34R HVAC Controls Switch Assembly - Auxiliary Rear

Driver Seat Components

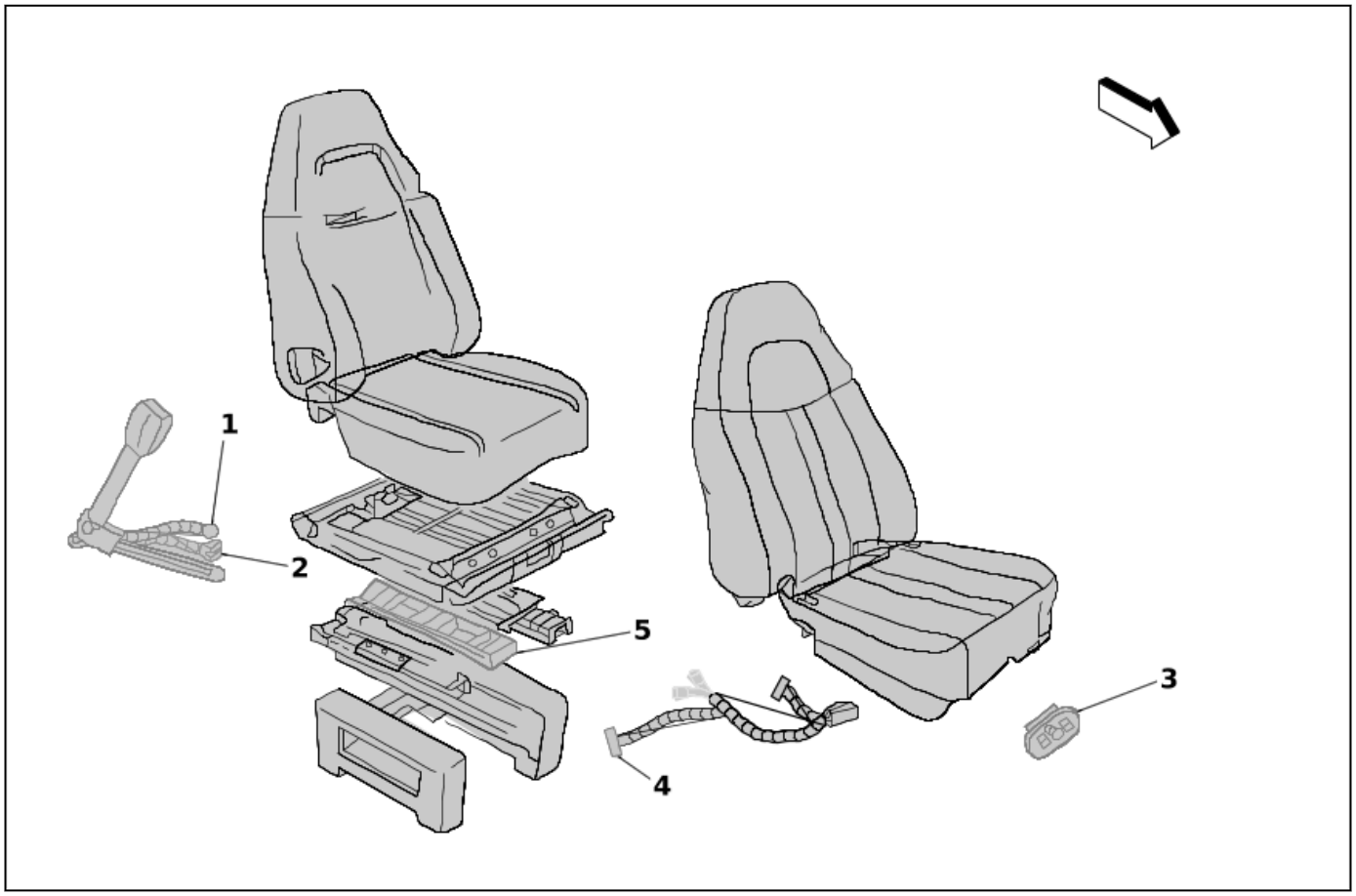

4004063

Items
(1) B153D Seat Belt Buckle - Driver
(2) F109D Seat Belt Buckle Pretensioner - Driver
(3) S64D Seat Adjuster Switch - Driver (AG1)
(4) X307 Body Wiring Harness to Seat Wiring Harness - Driver
(5) M49D Seat Motor Assembly - Driver

Passenger Seat Components

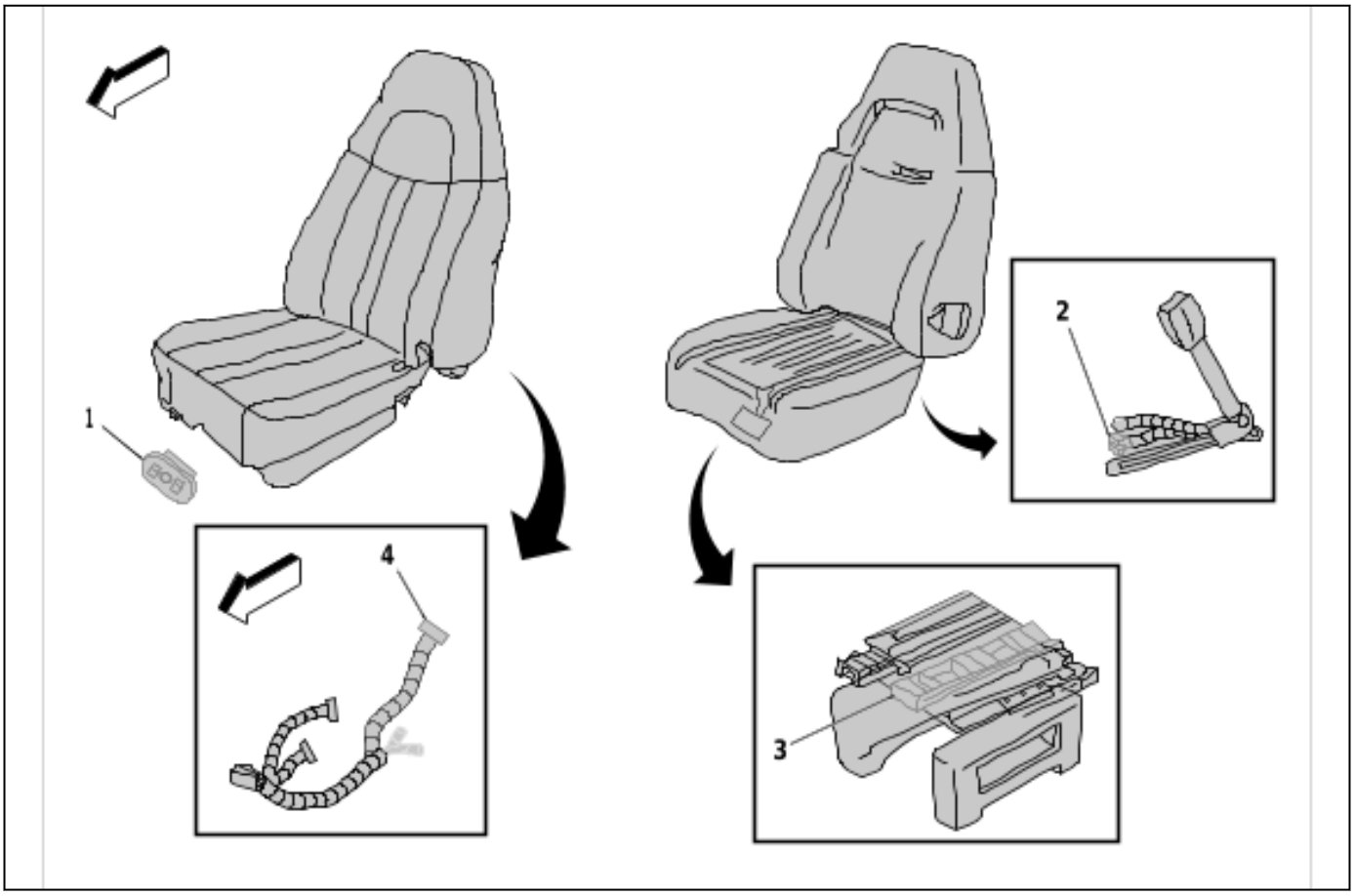

6326443

Items
(1) S64P Seat Adjuster Switch - Passenger (AG2)
(2) F109P Seat Belt Buckle Pretensioner - Passenger
(3) M49P Seat Motor Assembly - Passenger
(4) X306 Body Wiring Harness to Seat Wiring Harness - Passenger

Airbag Impact Sensor Components (E24)

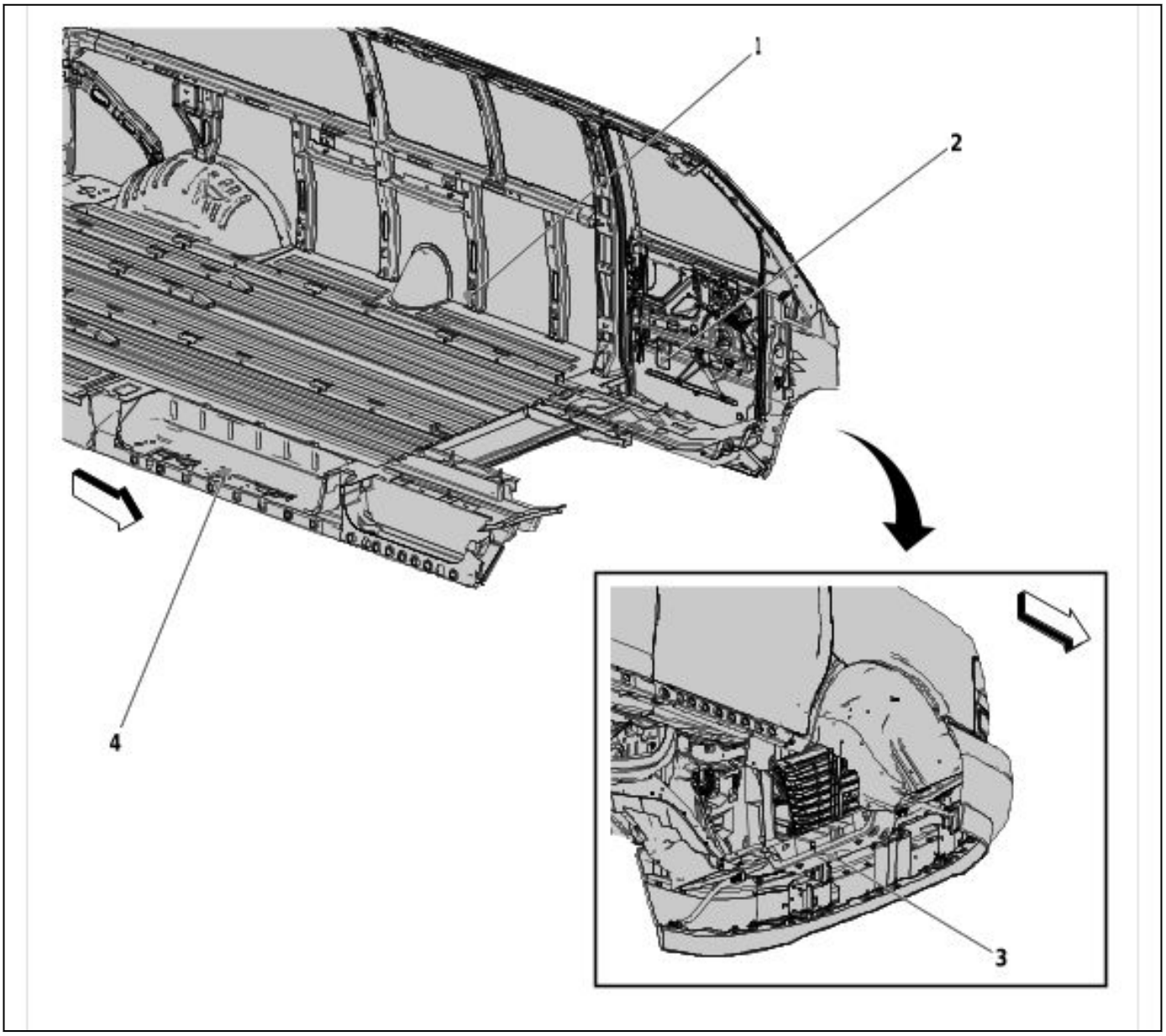

6003434

Items
(1) B63LR Side Impact Sensor - Left Rear
(2) B63LF Side Impact Sensor - Left Front
(3) B59 Front Impact Sensor
(4) B63RR Side Impact Sensor - Right Rear

Airbag Impact Sensor Components (YA2)

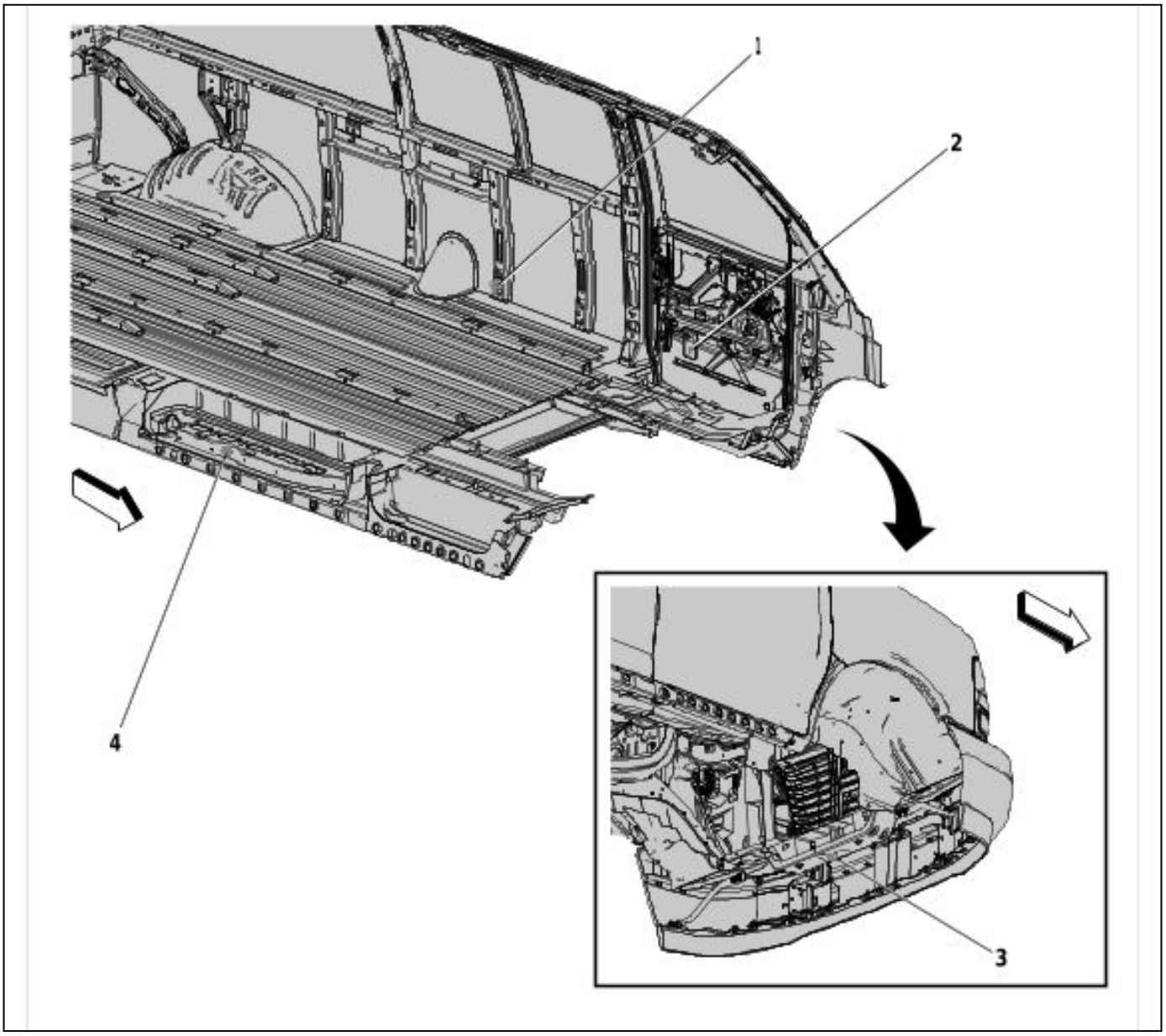

6003435

Items
(1) B63LR Side Impact Sensor - Left Rear
(2) B63LF Side Impact Sensor - Left Front
(3) B59 Front Impact Sensor
(4) B63RR Side Impact Sensor - Right Rear

Auxiliary HVAC Components (C36 / C69)

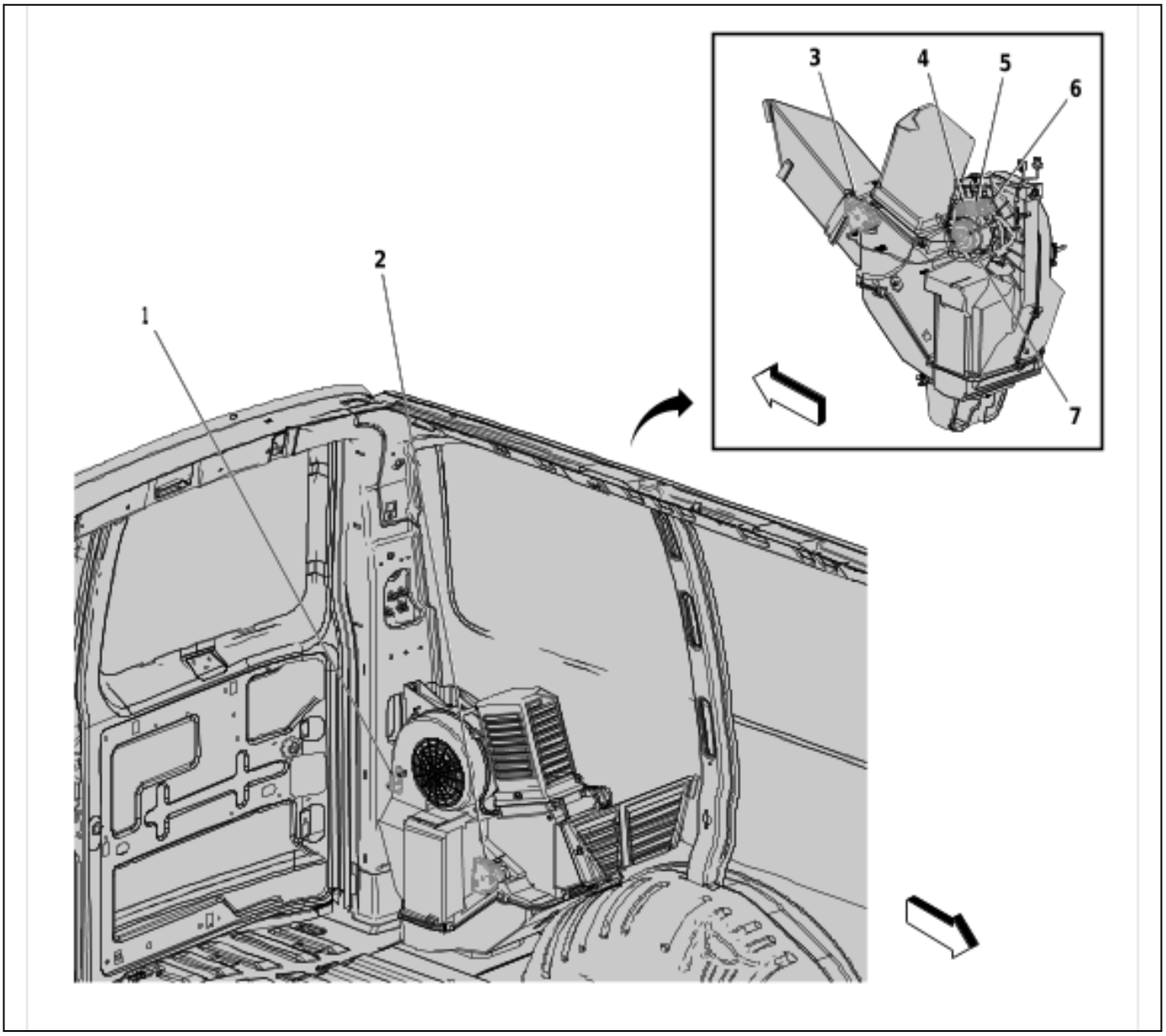

6040683

Items
(1) R3B Blower Motor Resistor - Auxiliary (C36/C69)
(2) M6B Air Temperature Door Actuator - Auxiliary
(3) M37B Mode Door Actuator - Auxiliary
(4) KR32B Blower Motor High Speed Relay - Auxiliary
(5) KR32D Blower Motor Medium Speed Relay - Auxiliary
(6) KR32C Blower Motor Low Speed Relay - Auxiliary
(7) M6B Air Temperature Door Actuator - Auxiliary

Driver Door Components

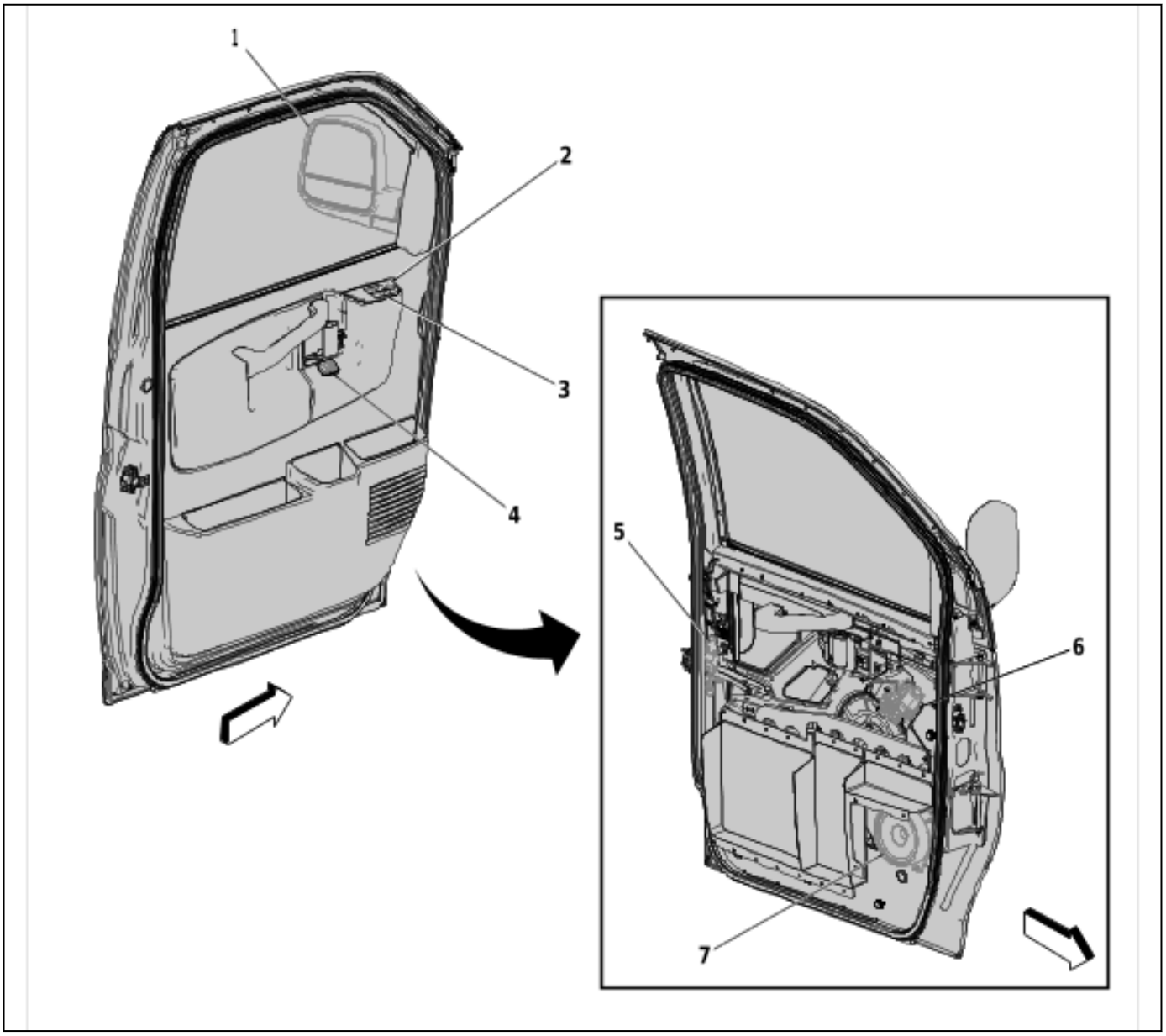

6003019

Items
(1) A9A Outside Rearview Mirror - Driver
(2) S52 Outside Rearview Mirror Switch (DE5)
(3) S79D Window Switch - Driver (A31)
(4) S13D Door Lock Switch - Driver (AU3)
(5) A23D Door Latch Assembly - Driver
(6) M74D Window Motor - Driver
(7) P19AG Speaker - Left Front Door

Front Passenger Door Components

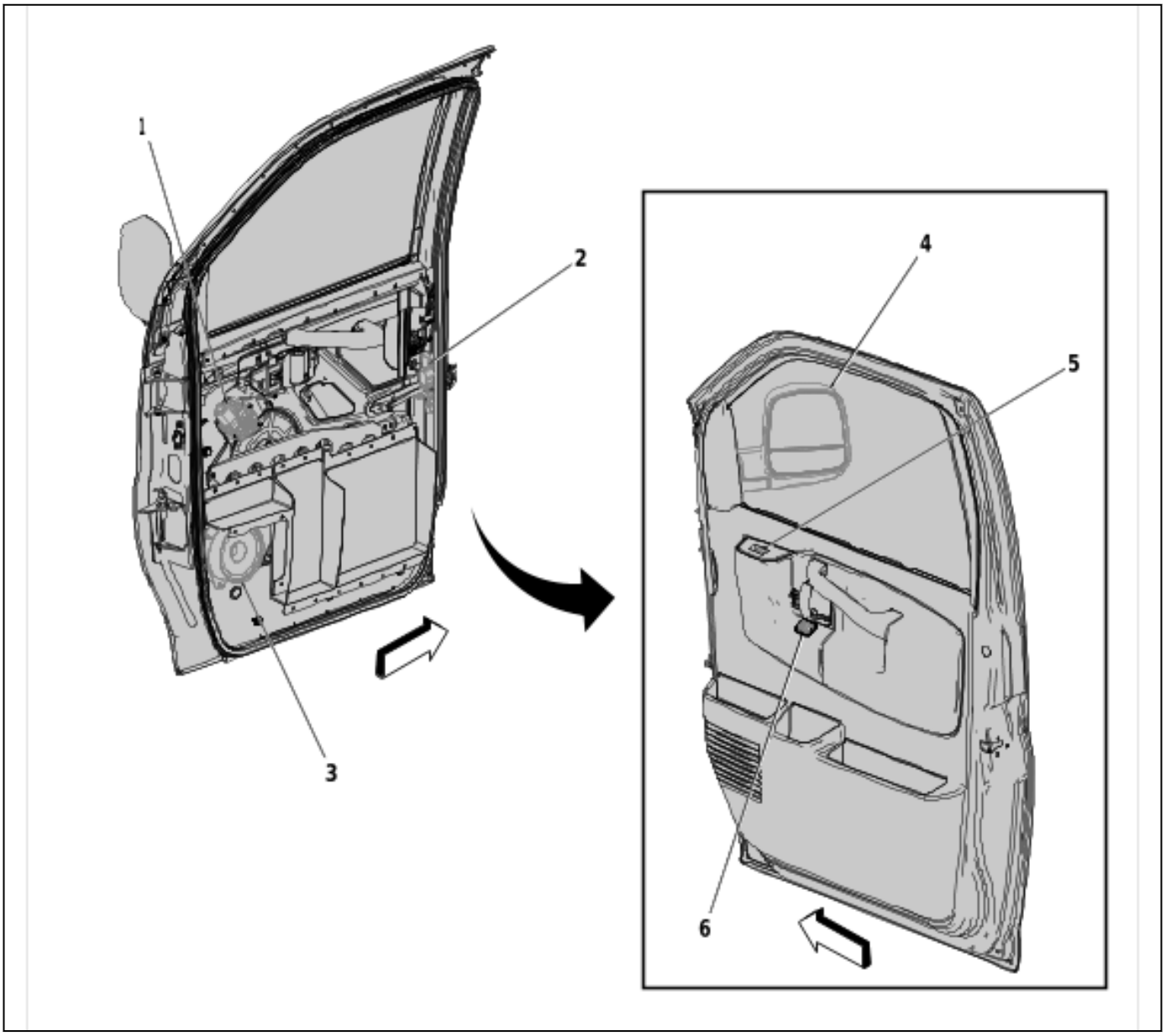

6003020

Items
(1) M74P Window Motor - Passenger
(2) A23P Door Latch Assembly - Passenger
(3) P19AH Speaker - Right Front Door
(4) A9B Outside Rearview Mirror - Passenger
(5) S79P Window Switch - Passenger (A31)
(6) S13P Door Lock Switch - Passenger (AU3)

Right Side Hinged Door Components (E24)

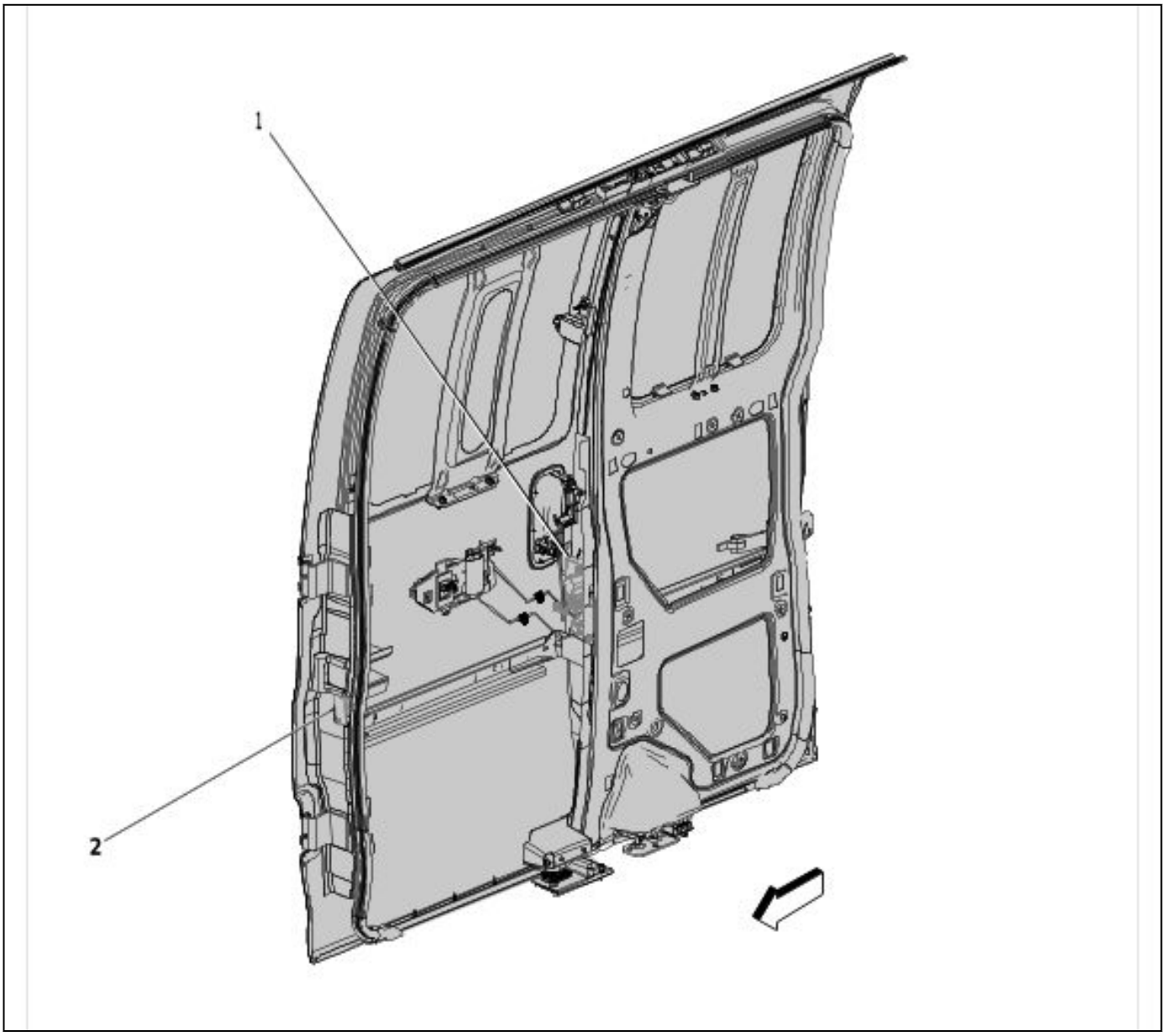

6003021

Items
(1) M14RR Door Lock Actuator - Right Rear (E24/YA2)
(2) X87RB Sliding Door Jamb Contact Plate - Right Body

Right Side Sliding Door Components (YA2)

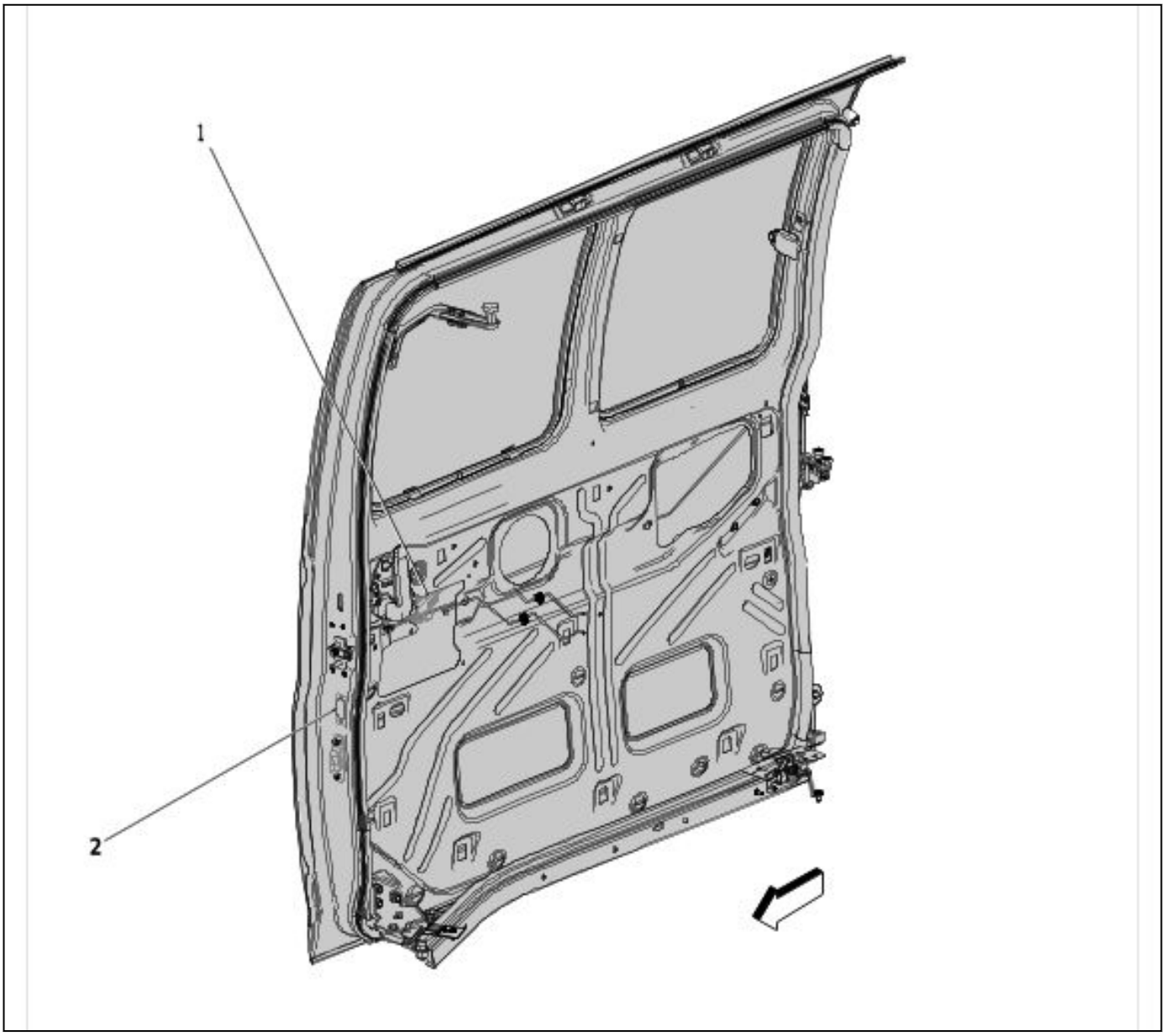

6003022

Items
(1) M14RR Door Lock Actuator - Right Rear (E24/YA2)
(2) X87RB Sliding Door Jamb Contact Plate - Right Body

Rear Door Components - Passenger/Cargo

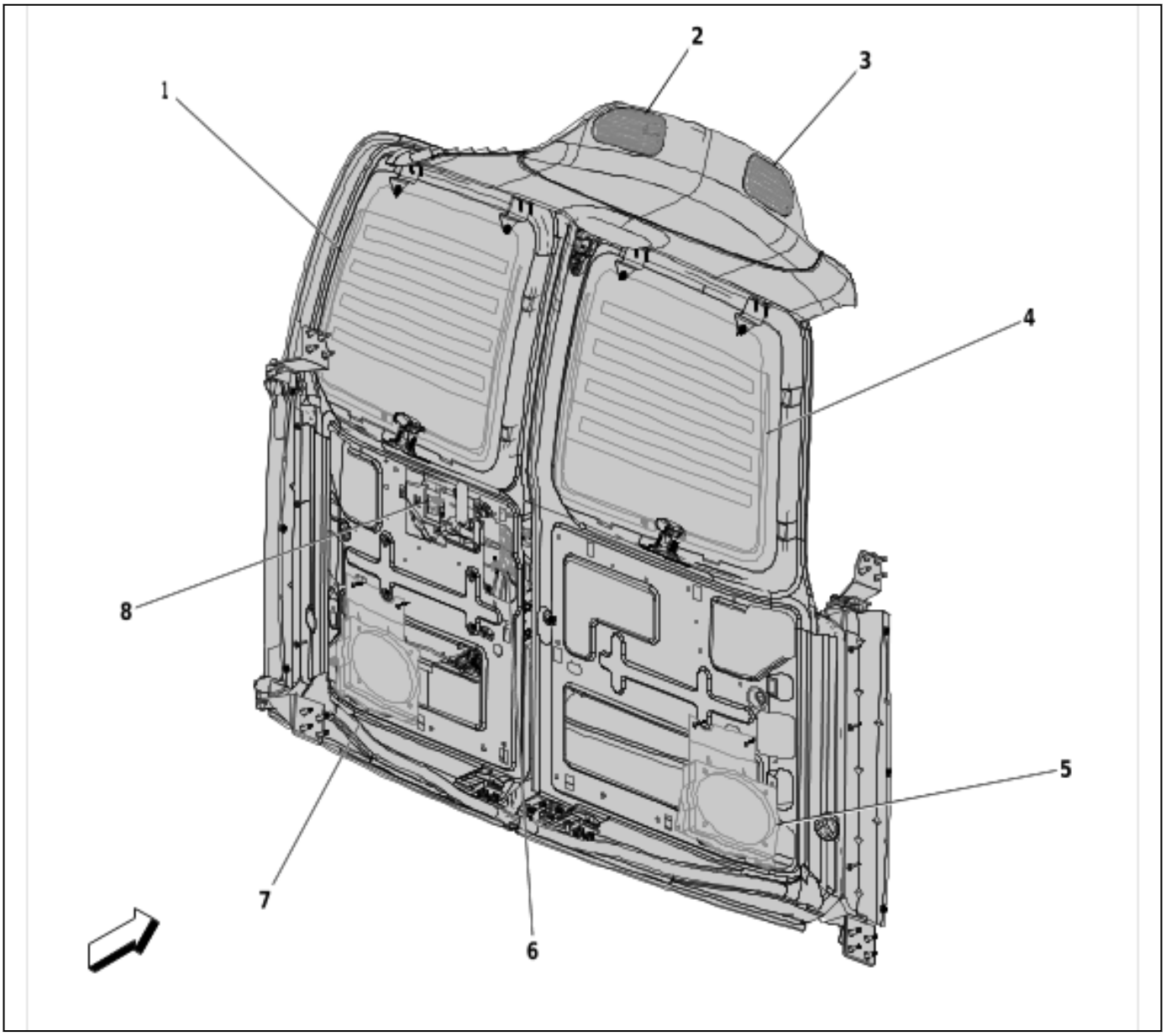

6003023

Items
(1) E18R Rear Defogger Grid - Right
(2) P19RR Speaker - Right Rear Roof
(3) P19LR Speaker - Left Rear Roof
(4) E18L Rear Defogger Grid - Left
(5) P19F Speaker - Left Rear Cargo Door
(6) M13 Door Latch Assembly - Rear Cargo
(7) P19T Speaker - Right Rear Cargo Door
(8) S13A Door Lock Switch - Rear Cargo

Rear of Vehicle Components - Passenger/Cargo

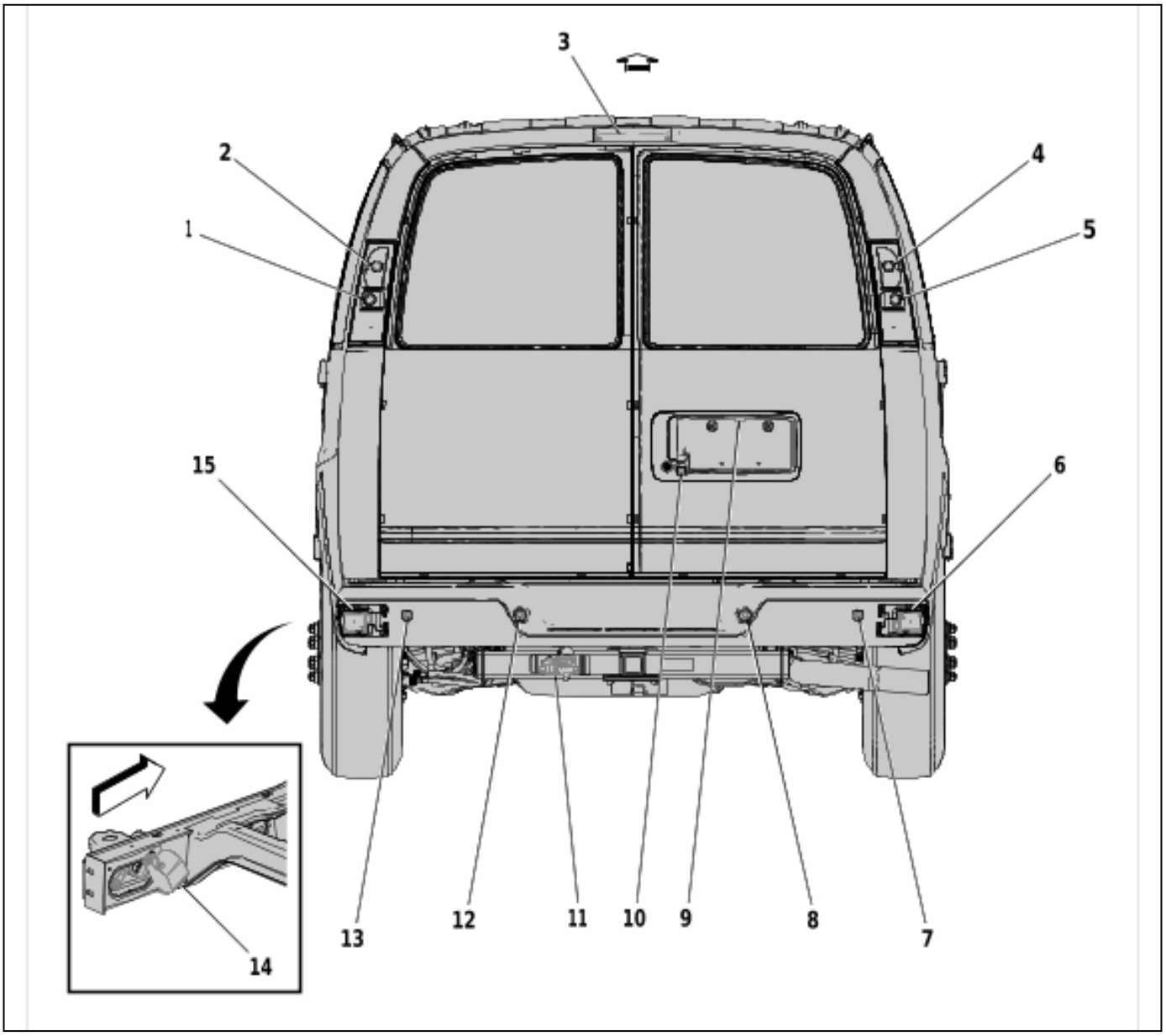

4650730

Items
(1) E5A Backup Lamp - Left
(2) E5S Tail/Stop and Turn Signal Lamp - Left
(3) E6 Center High Mounted Stop Lamp
(4) E5T Tail/Stop and Turn Signal Lamp - Right
(5) E5B Backup Lamp - Right
(6) B218R Side Object Sensor Module - Right (UFT)
(7) B306H Parking Assist Sensor - Rear Right Outer (UD7)
(8) B306G Parking Assist Sensor - Rear Right Middle (UD7)
(9) E7 License Plate Lamp
(10) B87 Rearview Camera (Cutaway/(-Cutaway))
(11) X88 Trailer Connector (UY7)
(12) B306F Parking Assist Sensor - Rear Left Middle (UD7)

Items
(13) B306E Parking Assist Sensor - Rear Left Outer (UD7)
(14) P3 Backup Alarm (UYZ/(-UYZ))
(15) B218L Side Object Sensor Module - Left (UFT)

Frame and Underbody Components (- NE7)

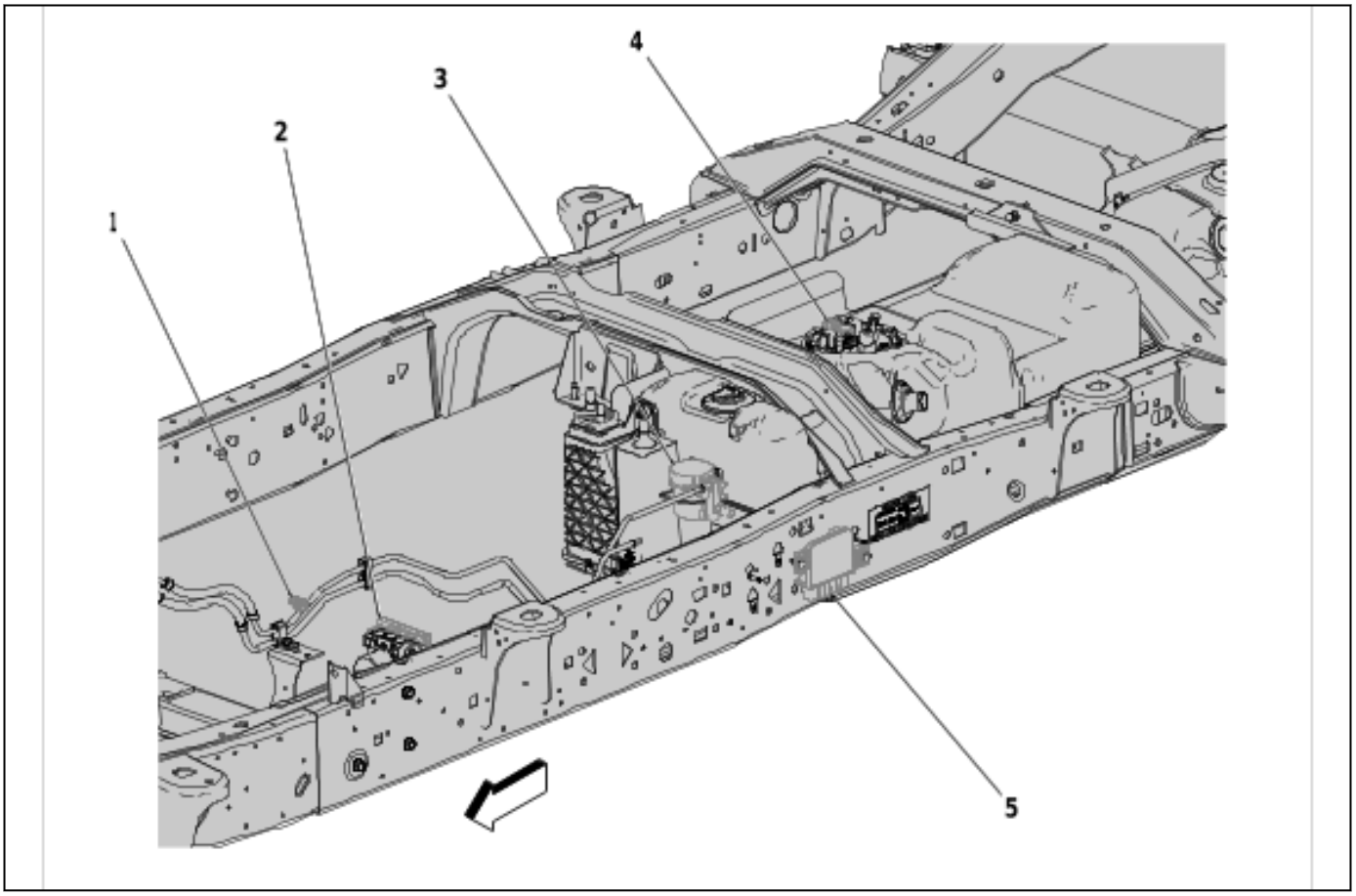

6003026

Items
(1) B47 Fuel Pressure Sensor (Cutaway/(-Cutaway))
(2) K17 Electronic Brake Control Module
(3) Q13 Evaporative Emission Vent Solenoid Valve
(4) B150 Fuel Tank Pressure Sensor
(5) K111 Fuel Pump Driver Control Module

Frame and Underbody Components (NE7)

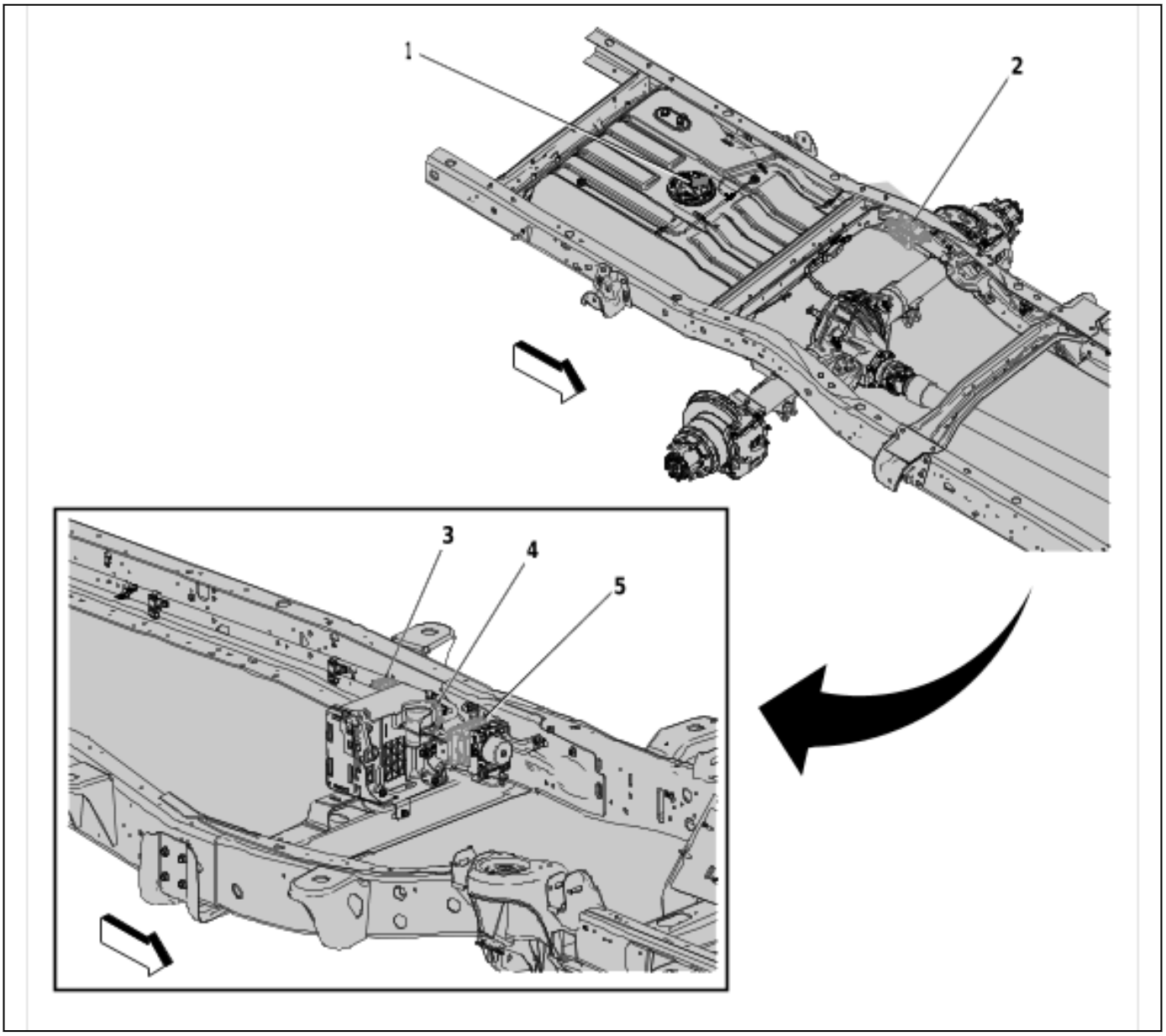

6003028

Items
(1) B150 Fuel Tank Pressure Sensor
(2) K111 Fuel Pump Driver Control Module
(3) B47 Fuel Pressure Sensor (Cutaway/(-Cutaway))
(4) Q13 Evaporative Emission Vent Solenoid Valve
(5) K17 Electronic Brake Control Module

Auxiliary Battery (TP3)

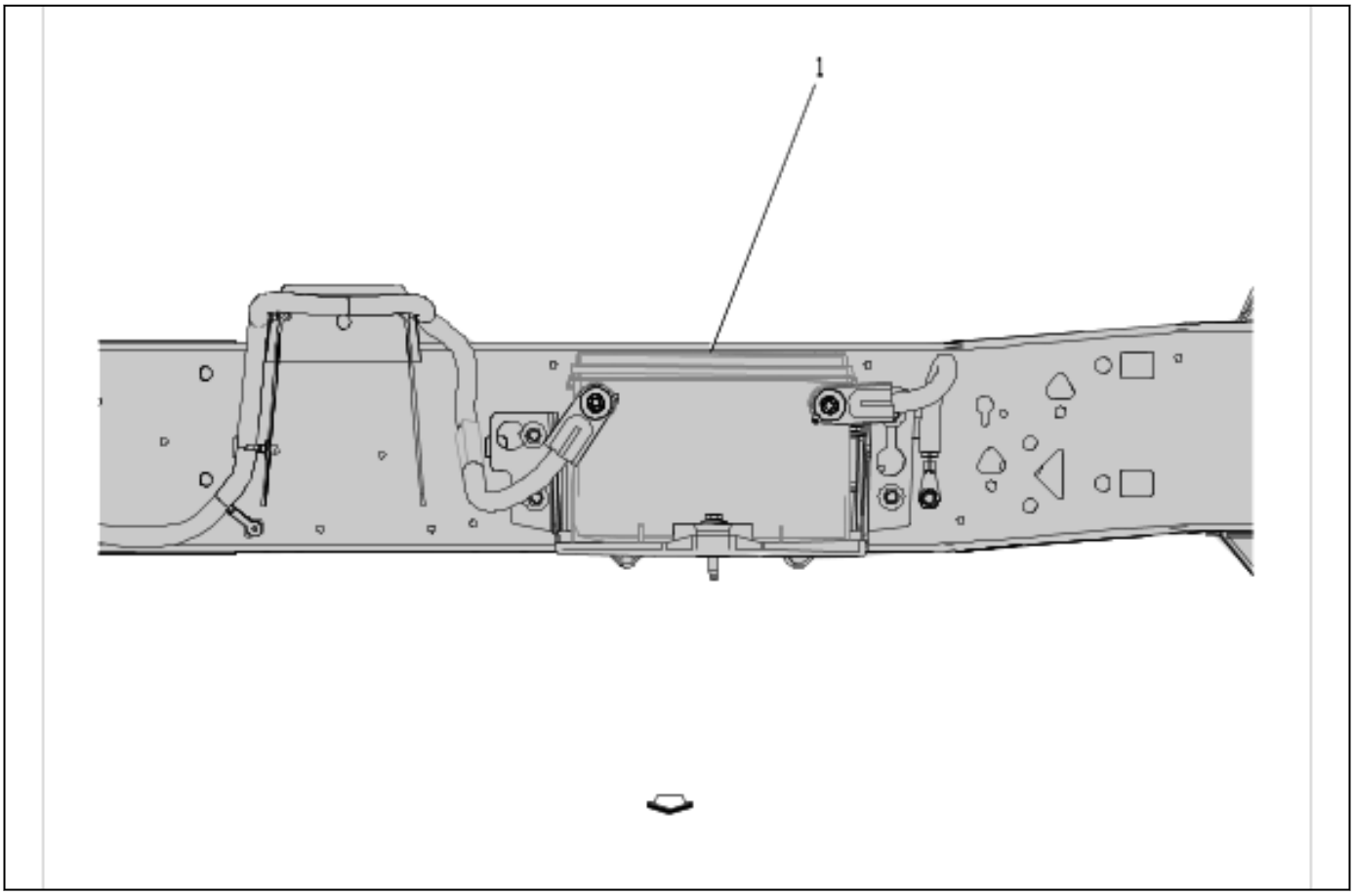

6133375

Items
(1) C1B Battery - Auxiliary

Wheel Speed Sensors - Cargo/Passenger

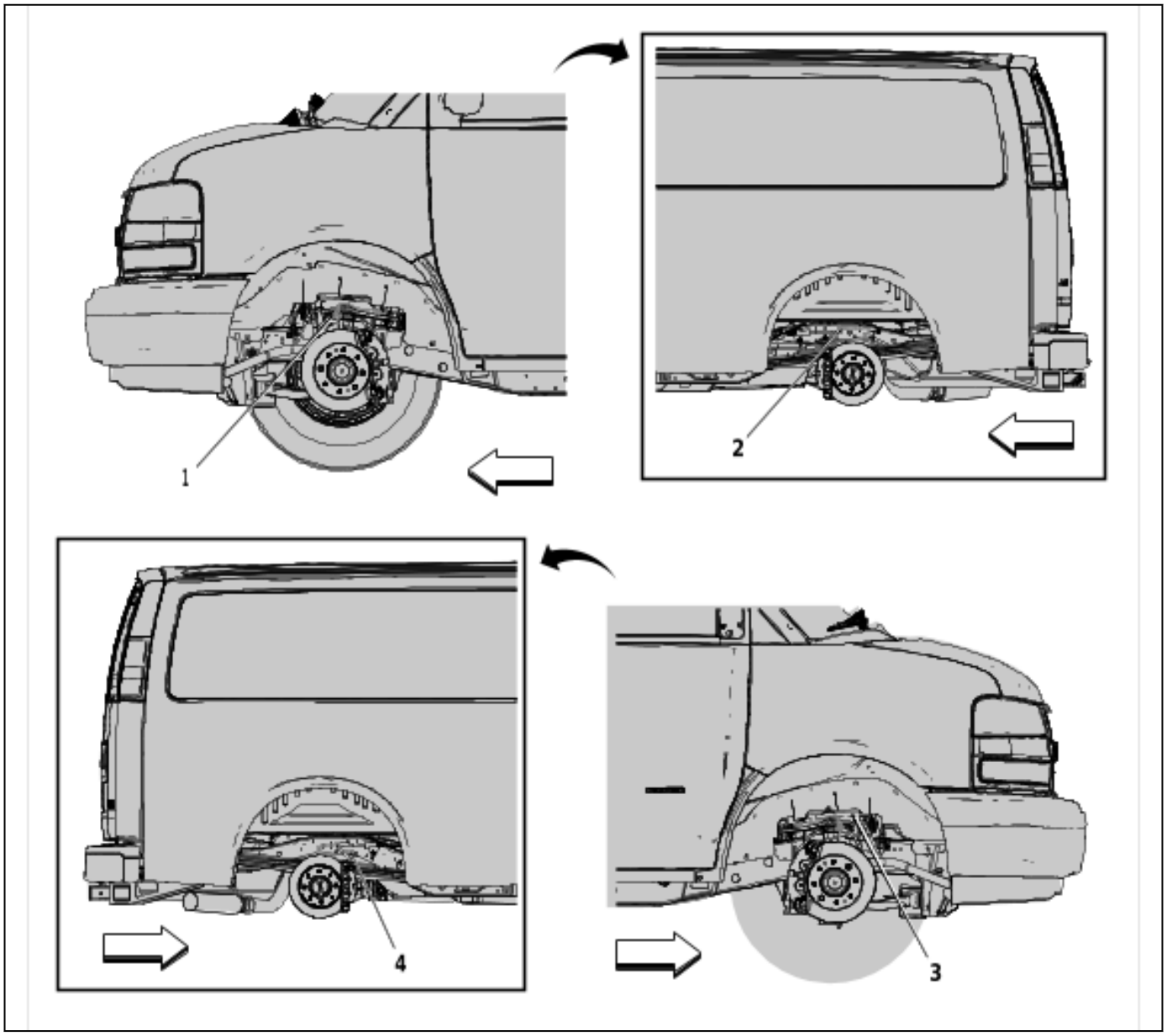

6003029

Items
(1) B5LF Wheel Speed Sensor - Left Front
(2) B5LR Wheel Speed Sensor - Left Rear ((R04)/(R05))
(3) B5RF Wheel Speed Sensor - Right Front
(4) B5RR Wheel Speed Sensor - Right Rear ((R04)/(R05))

Wheel Speed Sensors - Cutaway with SRW

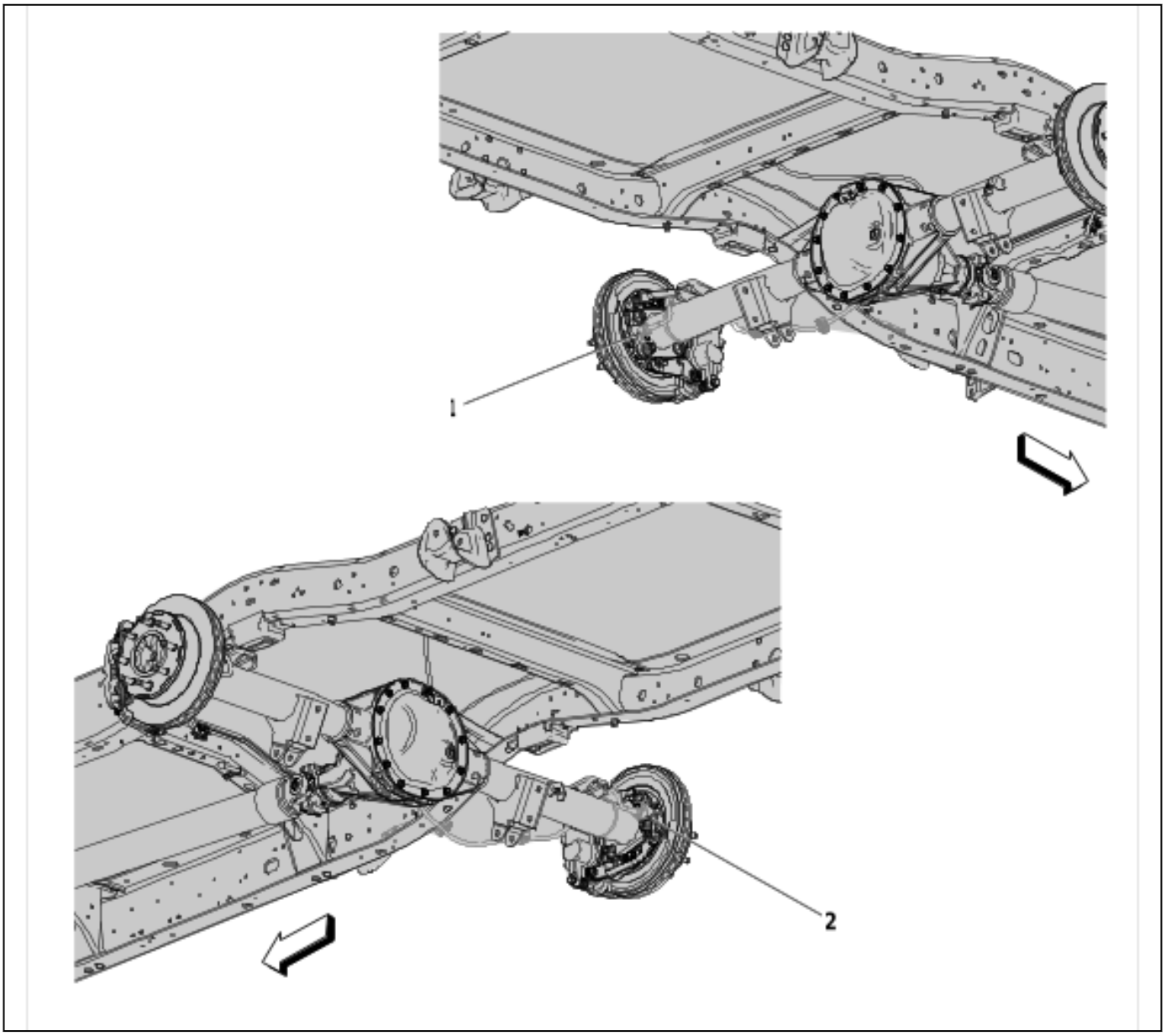

6003030

Items
(1) B5LR Wheel Speed Sensor - Left Rear ((R04)/(R05))
(2) B5RR Wheel Speed Sensor - Right Rear ((R04)/(R05))

Wheel Speed Sensors - Cutaway with DRW

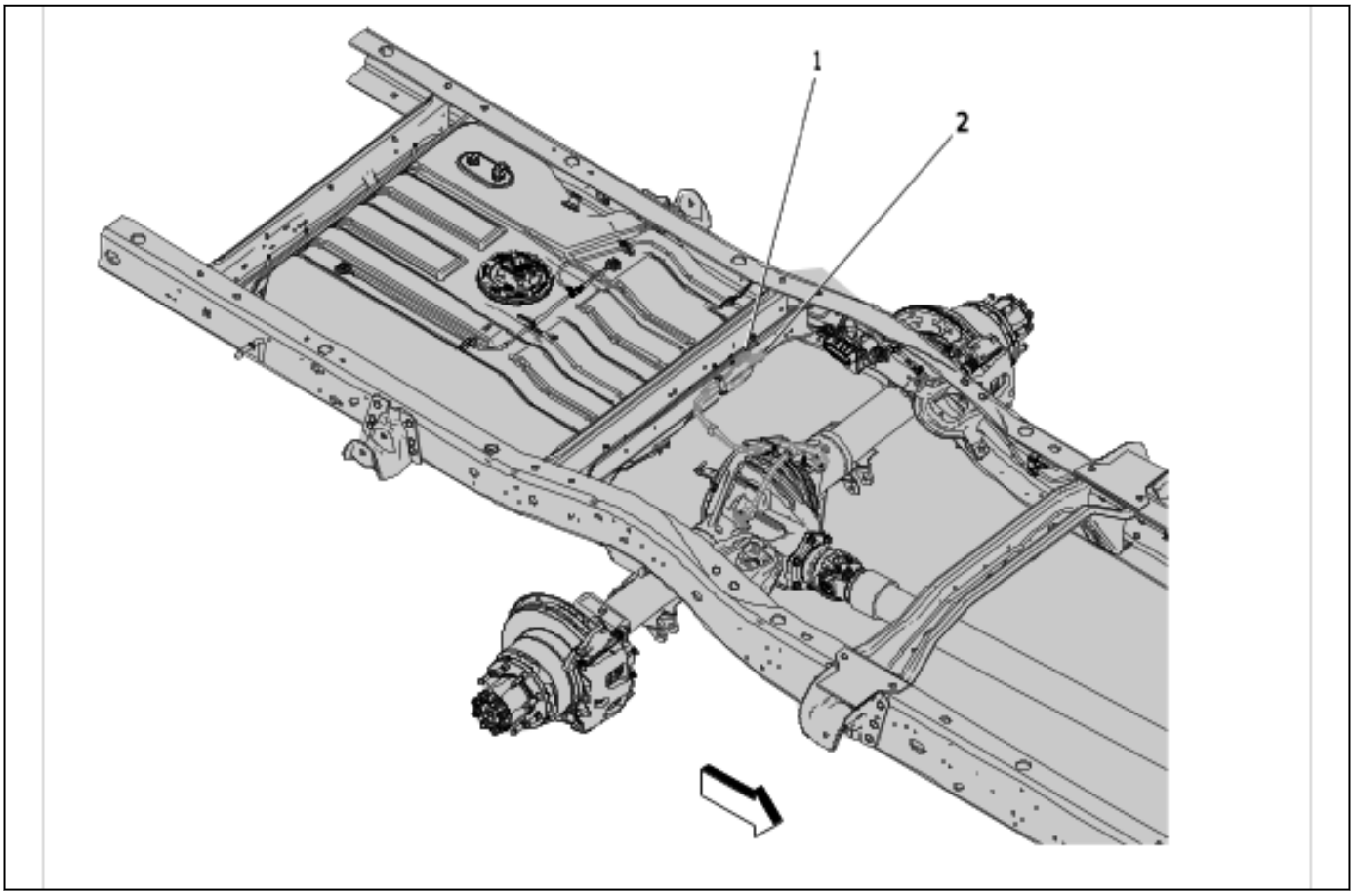

6003031

Items
(1) B5RR Wheel Speed Sensor - Right Rear ((R04)/(R05))
(2) B5LR Wheel Speed Sensor - Left Rear ((R04)/(R05))

Fuel Tank Components (- NE7)

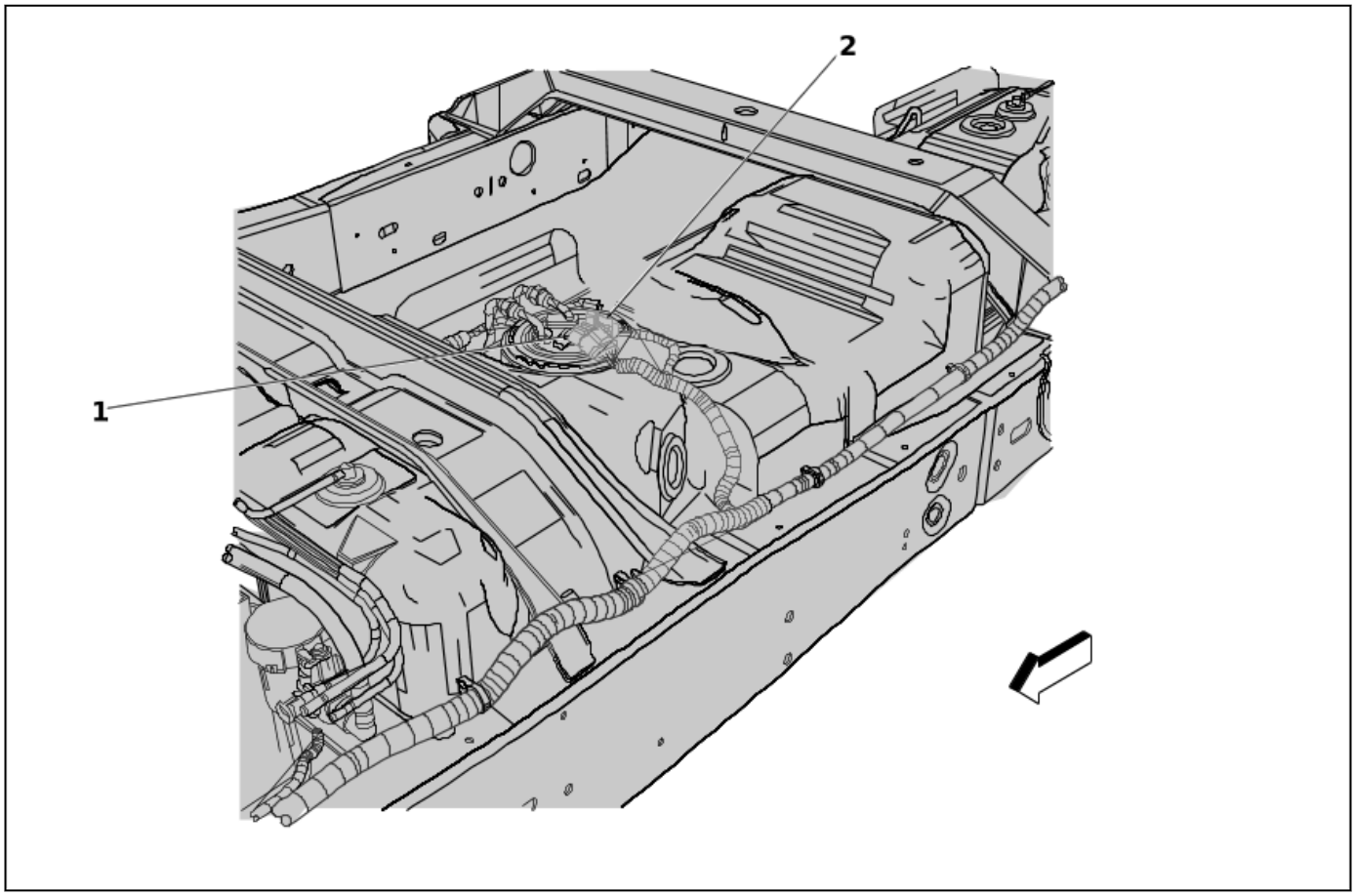

2831324

Items
(1) A7 Fuel Pump and Level Sensor Assembly
(2) B150 Fuel Tank Pressure Sensor

Fuel Tank Components (NE7)

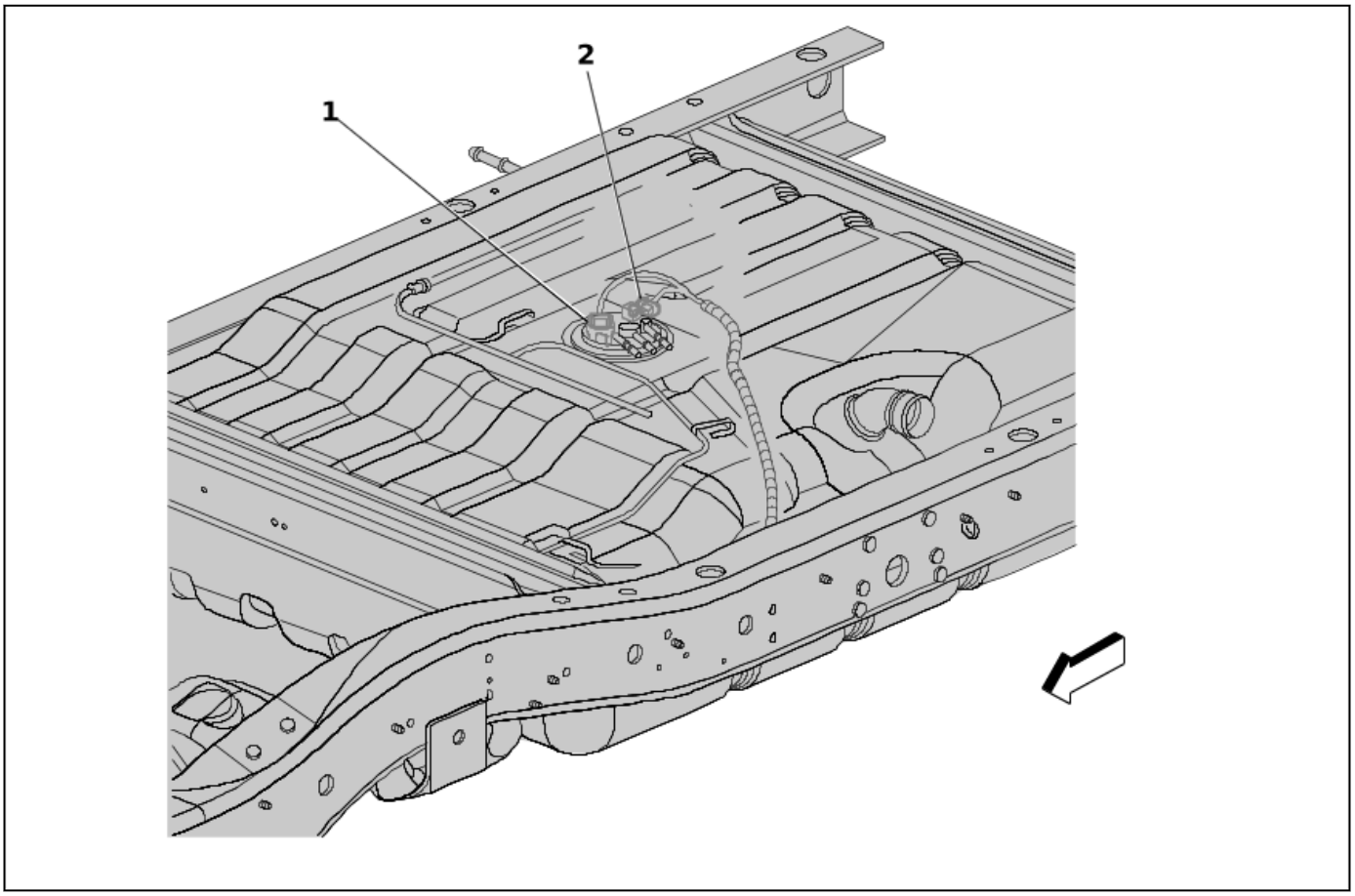

2831321

Items
(1) B150 Fuel Tank Pressure Sensor
(2) A7 Fuel Pump and Level Sensor Assembly

Inside of Fuel Tank Components

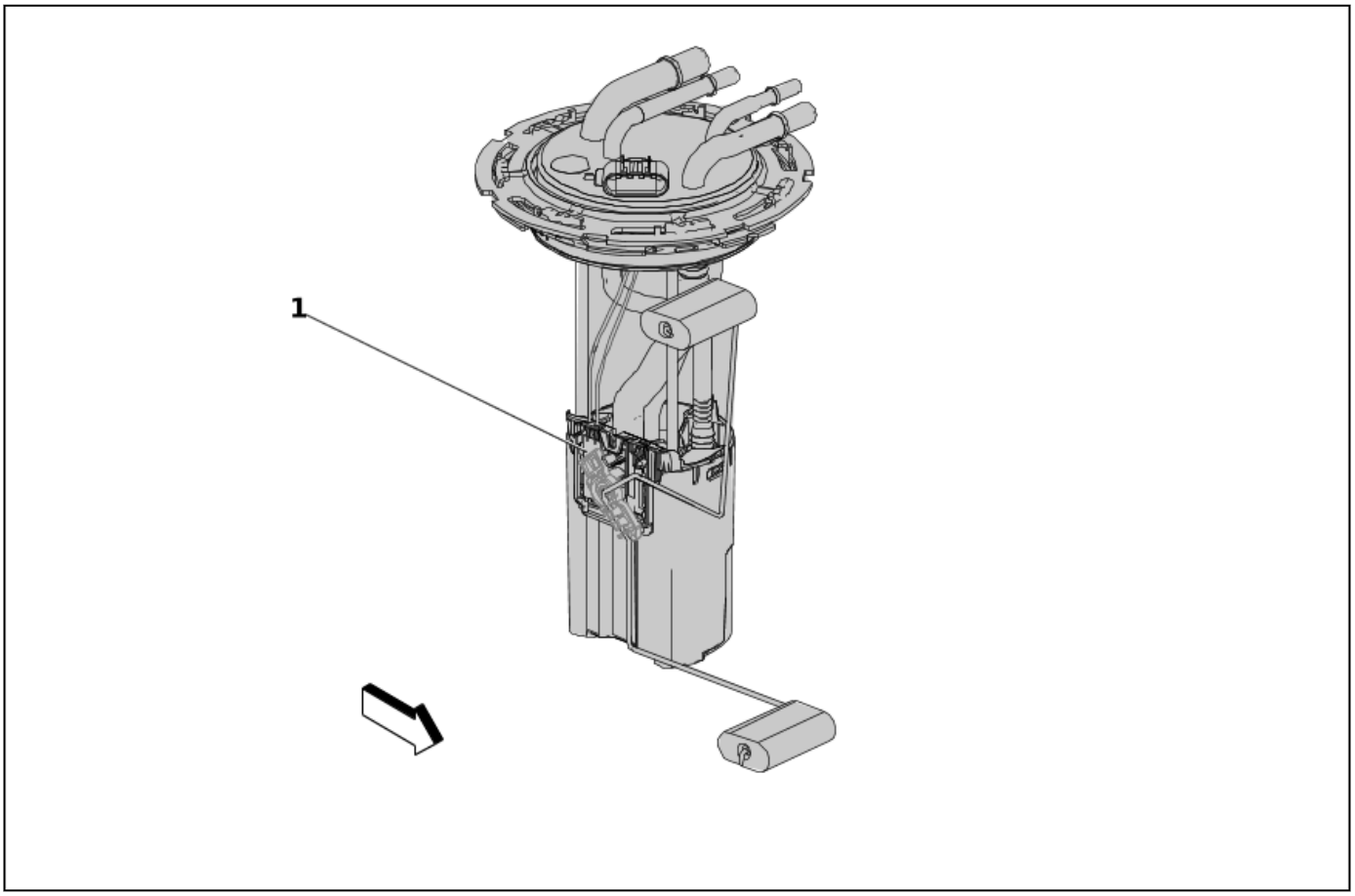

2831317

Items
(1) B46 Fuel Level Sensor

G100 and G101

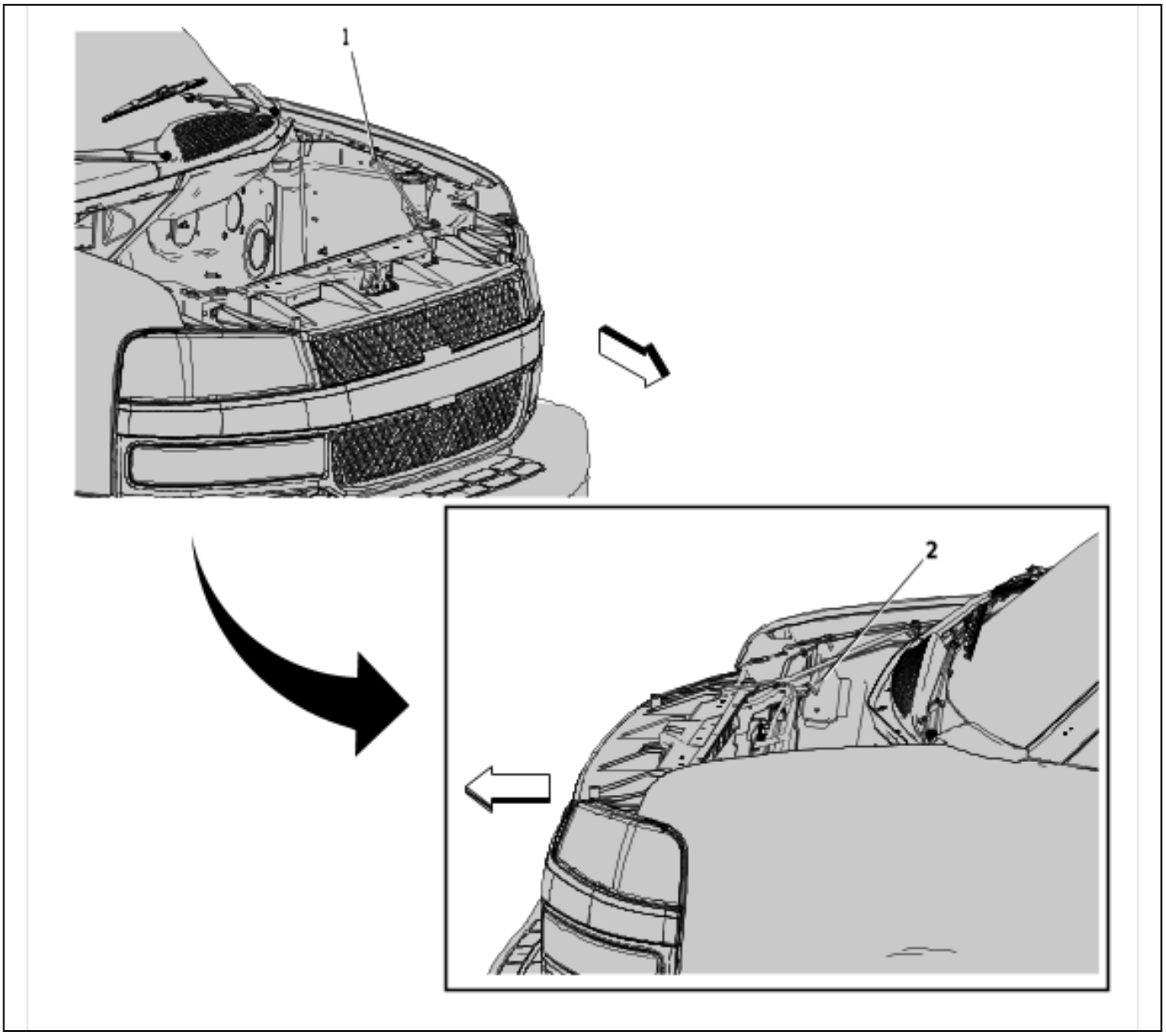

6040687

Items
(1) G100 Forward Lamp Wiring Harness
(2) G101 Forward Lamp Wiring Harness

G102 and G103 (LV1)

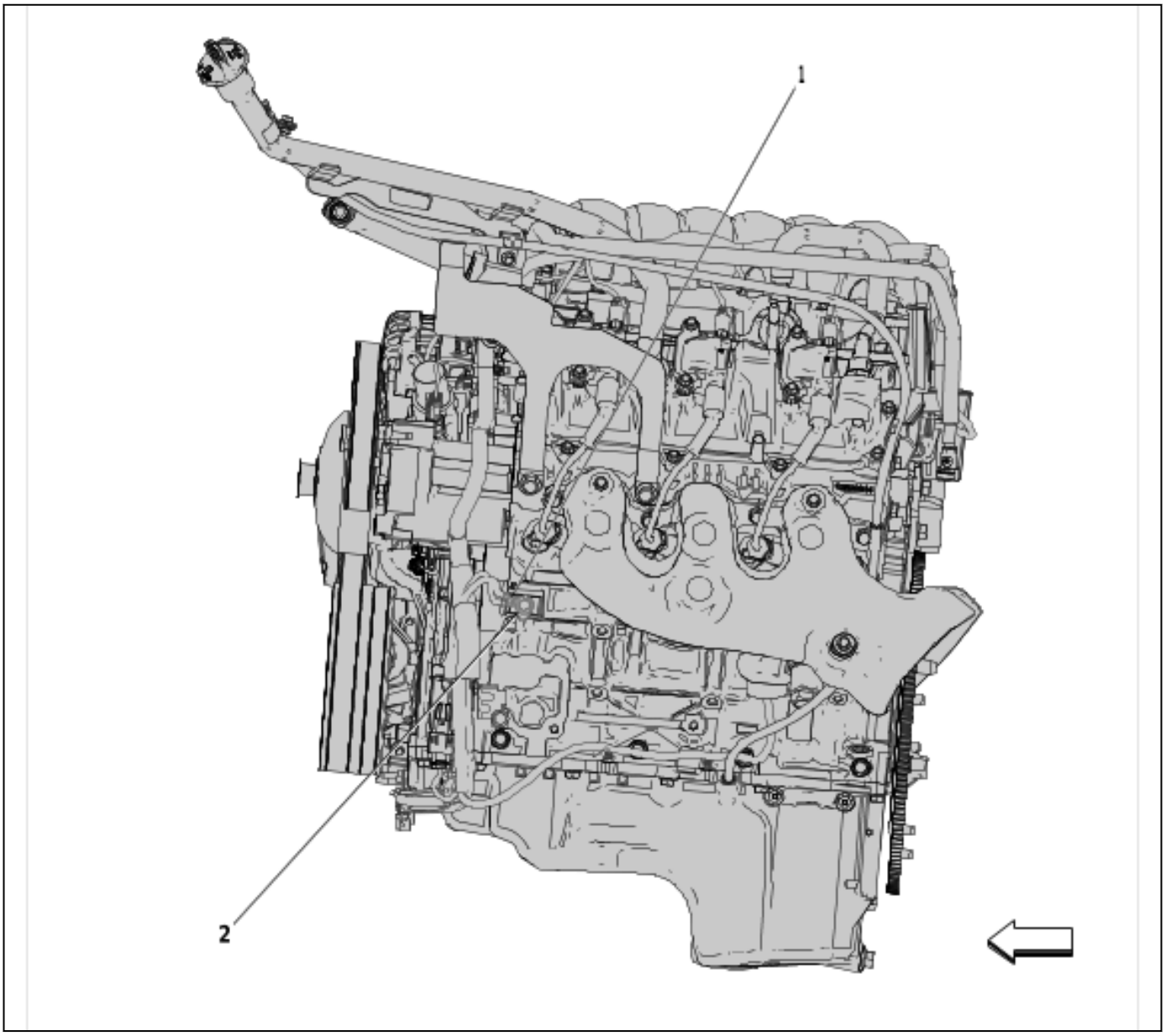

6003033

Items
(1) G102 Engine Wiring Harness
(2) G103 Engine Wiring Harness

G102 and G103 (L8T)

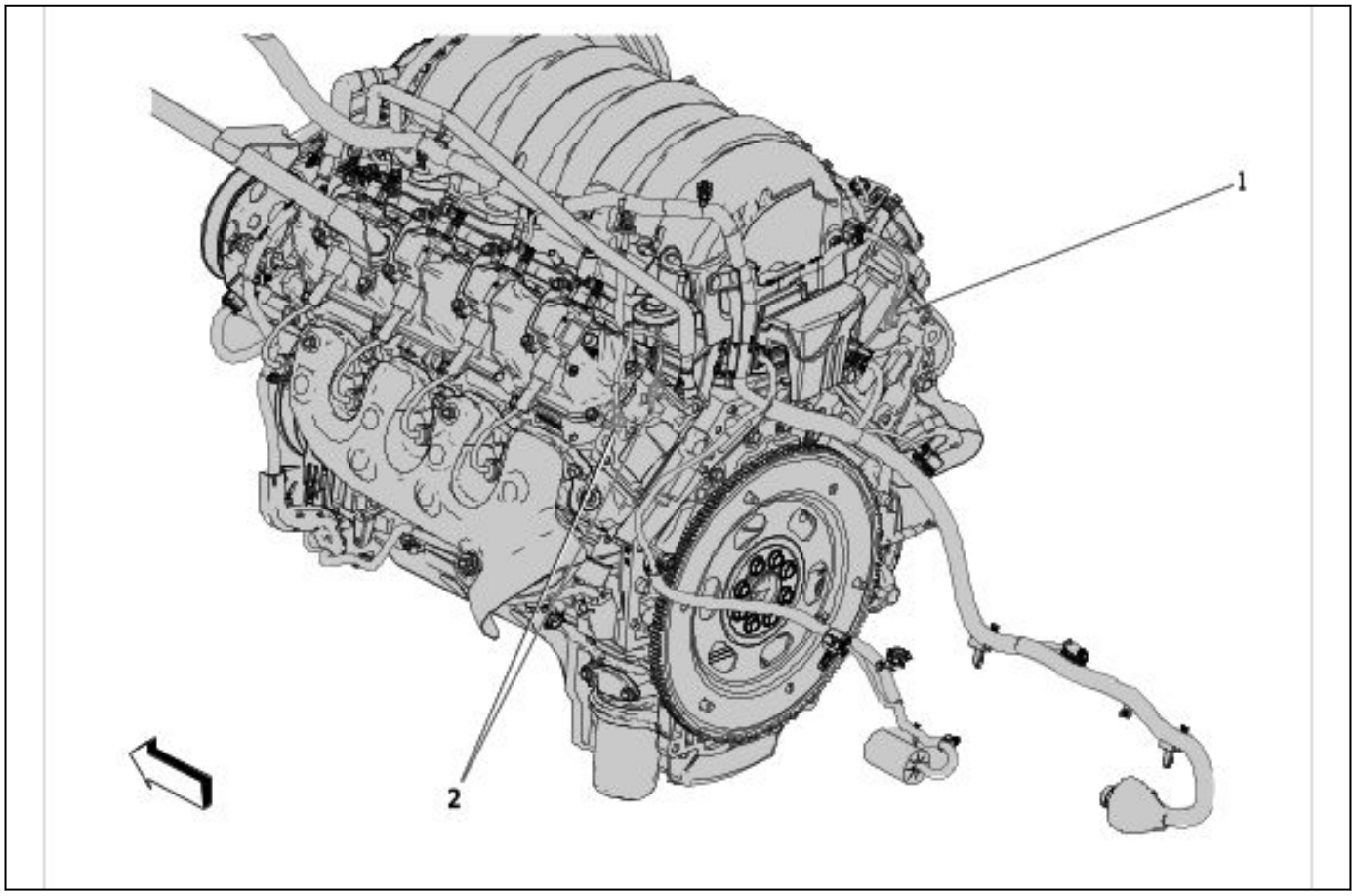

6040688

Items
(1) G102 Engine Wiring Harness
(2) G103 Engine Wiring Harness

G104 (LV1)

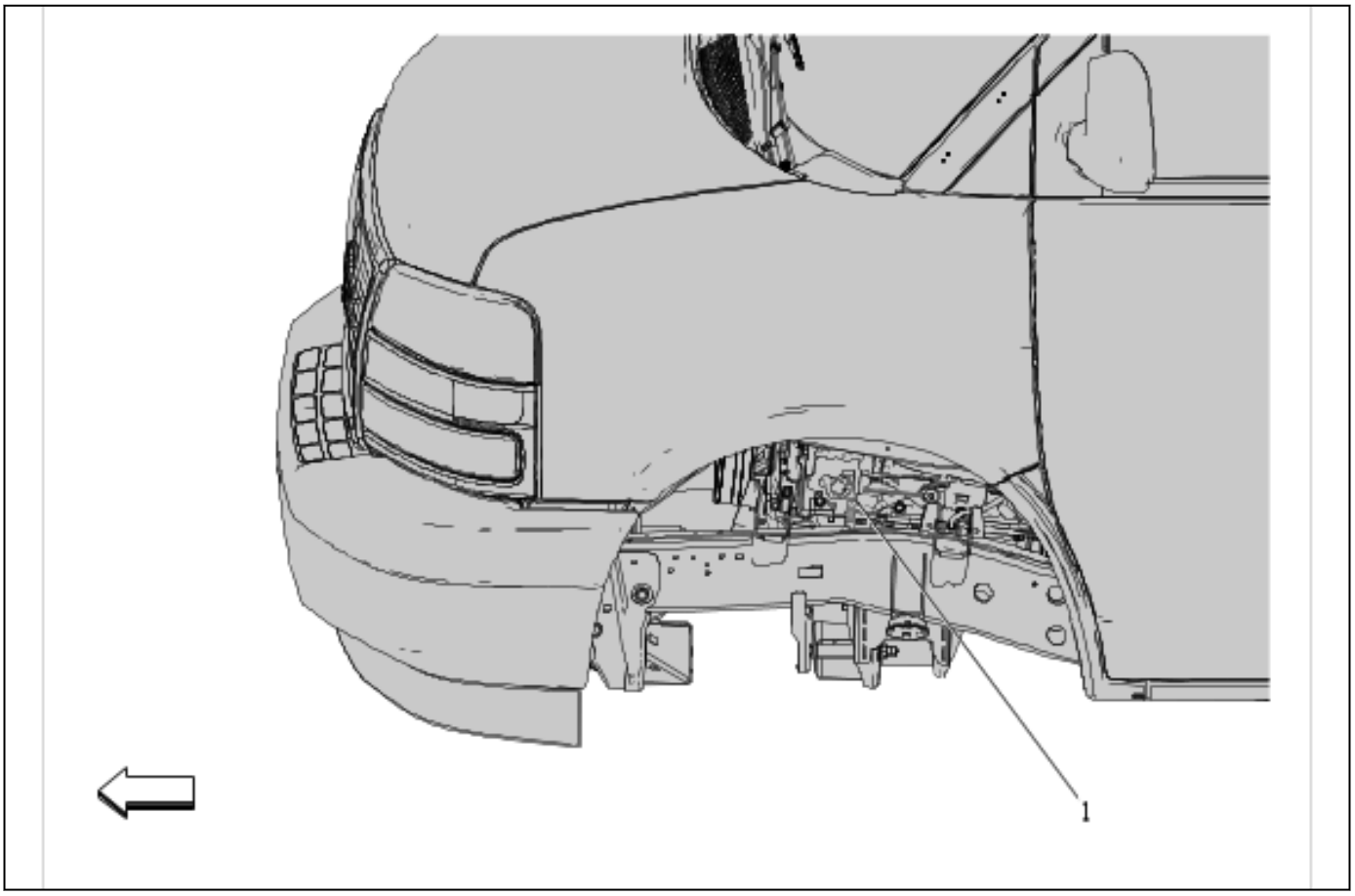

6040689

Items
(1) G104 Negative Battery Cable

G104 (L8T)

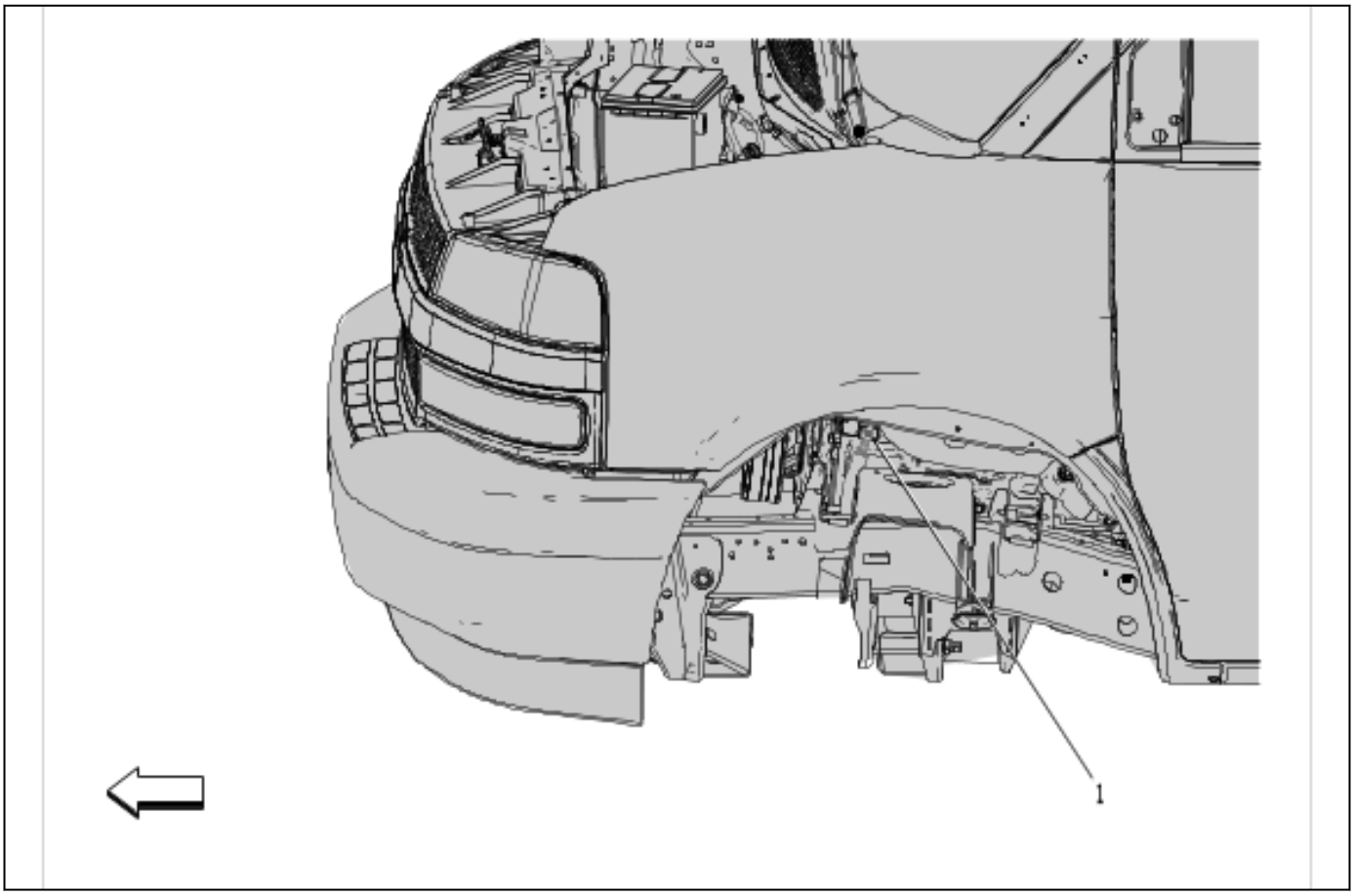

6040690

Items
(1) G104 Negative Battery Cable

G105 and G106

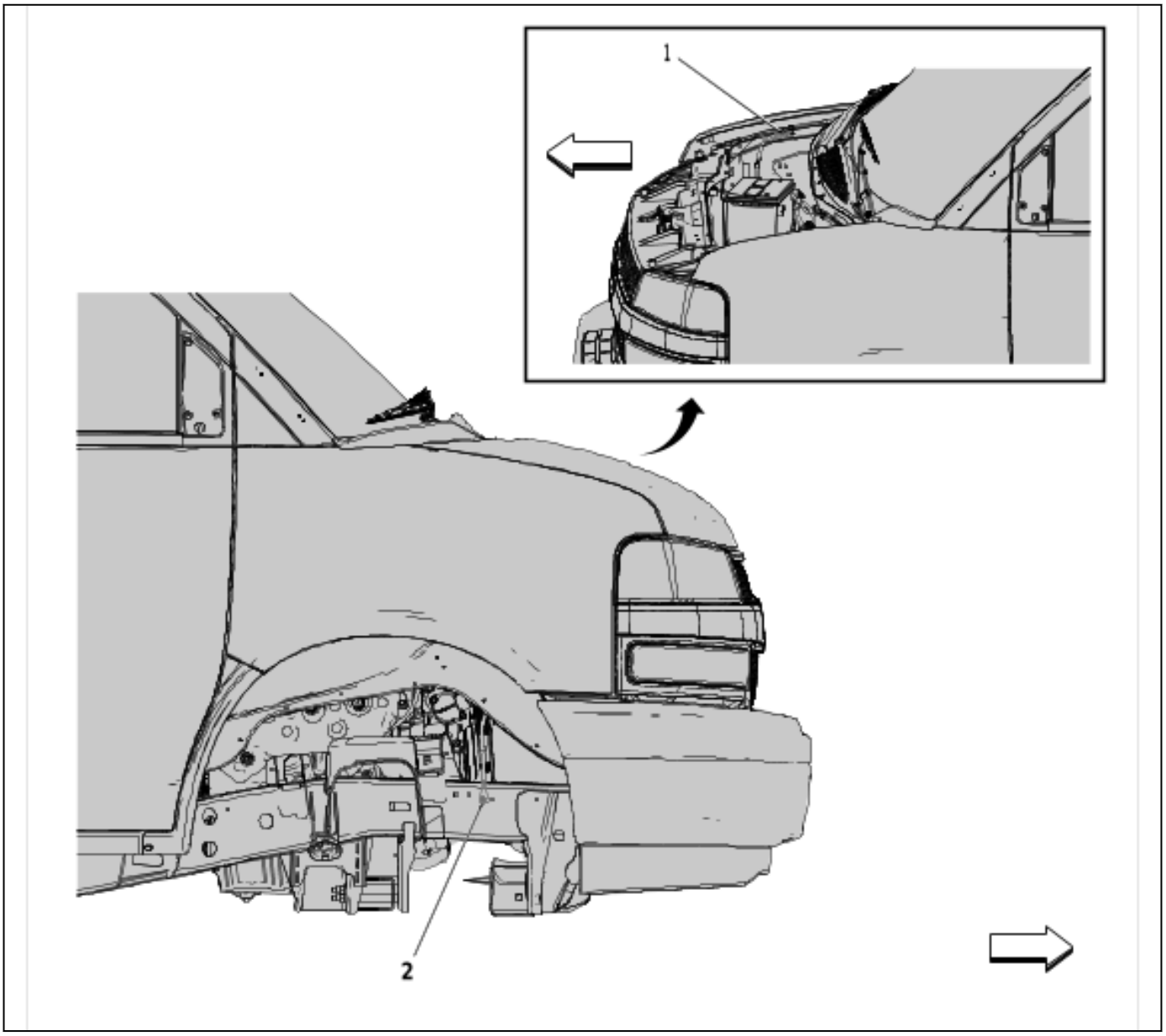

6040692

Items
(1) G106 Negative Battery Cable
(2) G105 Negative Battery Cable

G107 and G108

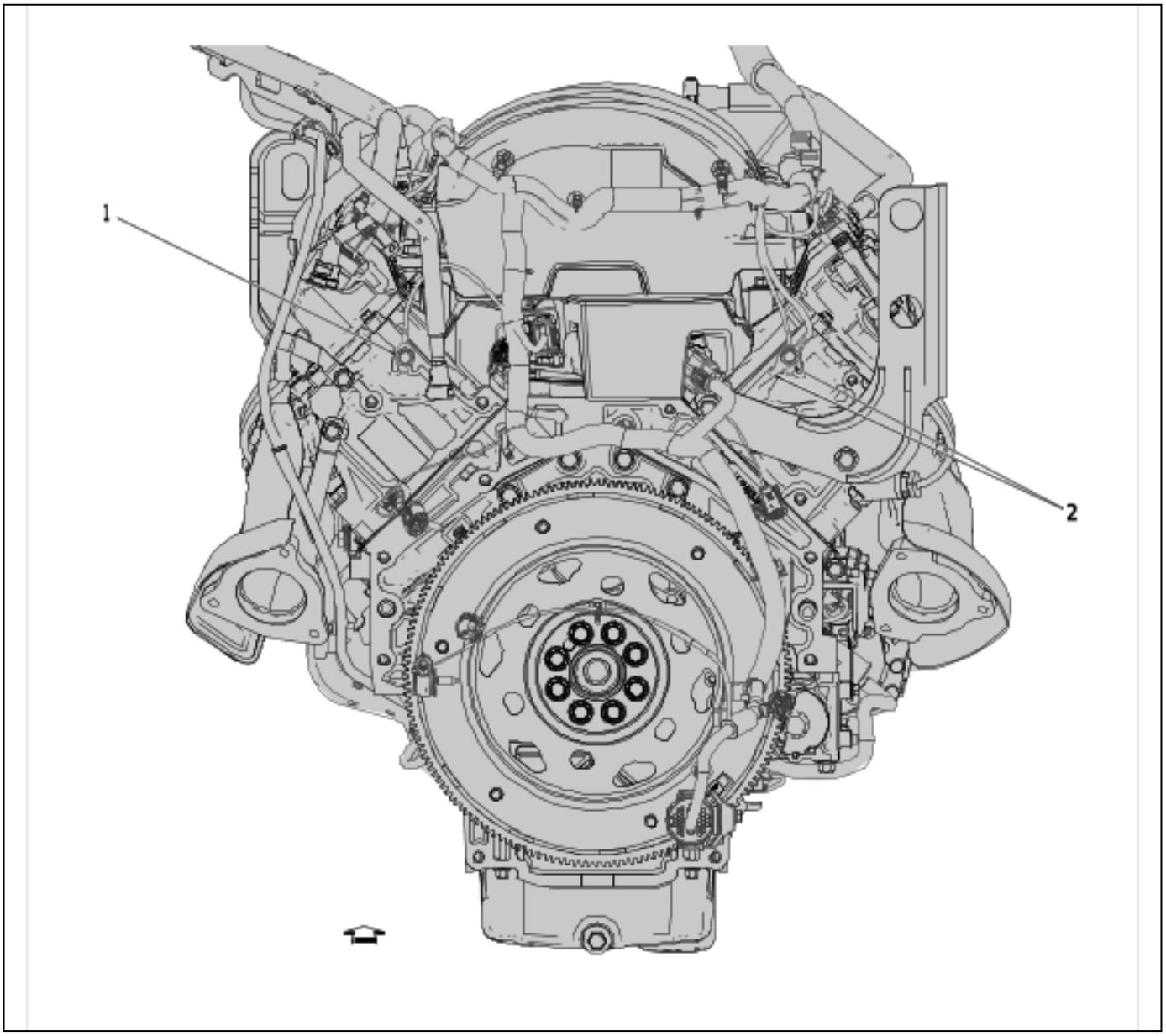

6274620

Items
(1) G108 Engine Wiring Harness
(2) G107 Engine Wiring Harness (LV1)

G109 (9L7)

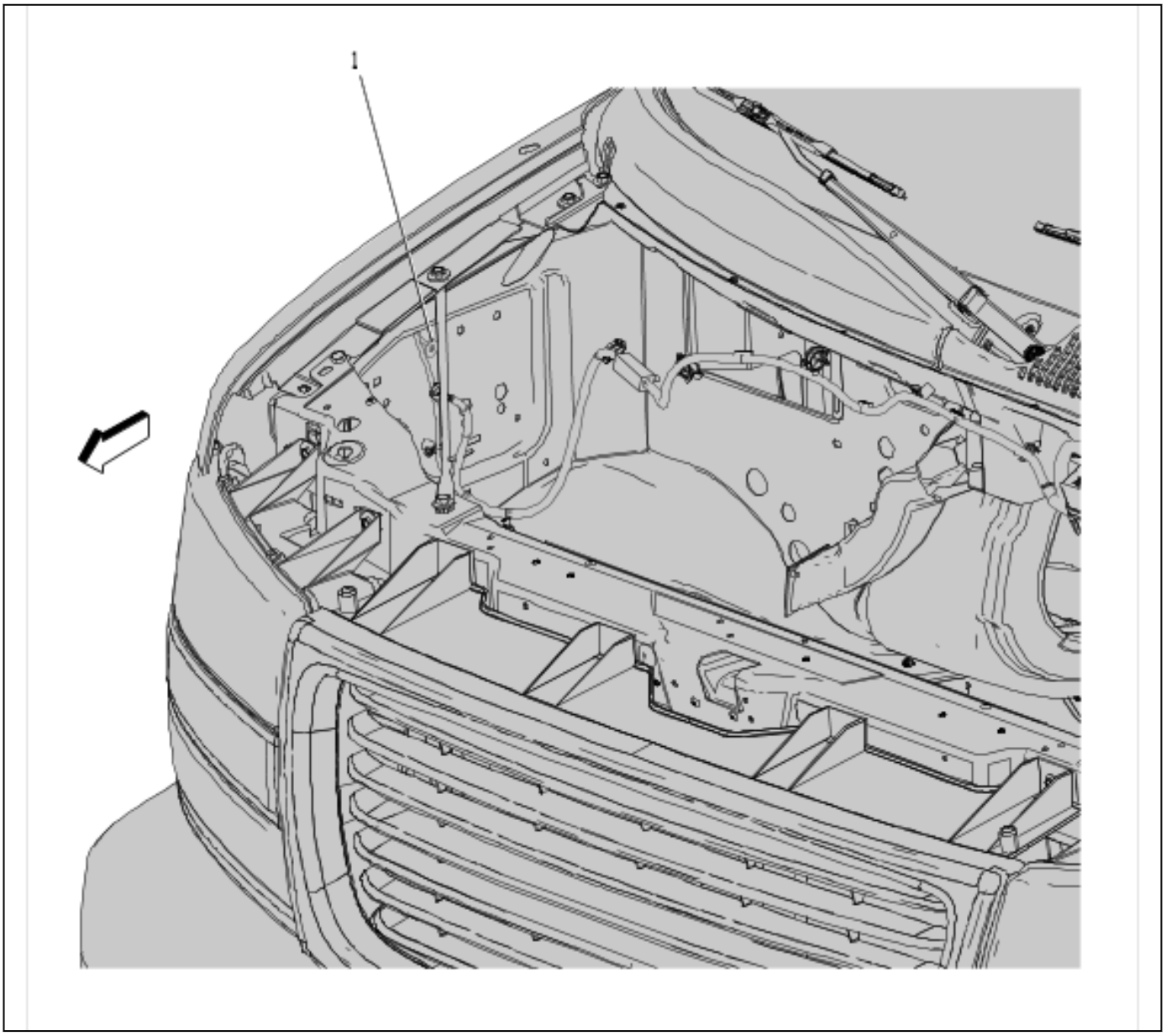

6003036

Items
(1) G109 Accessory Wiring Harness (9L7)

G300 and G404 - Passenger/Cargo

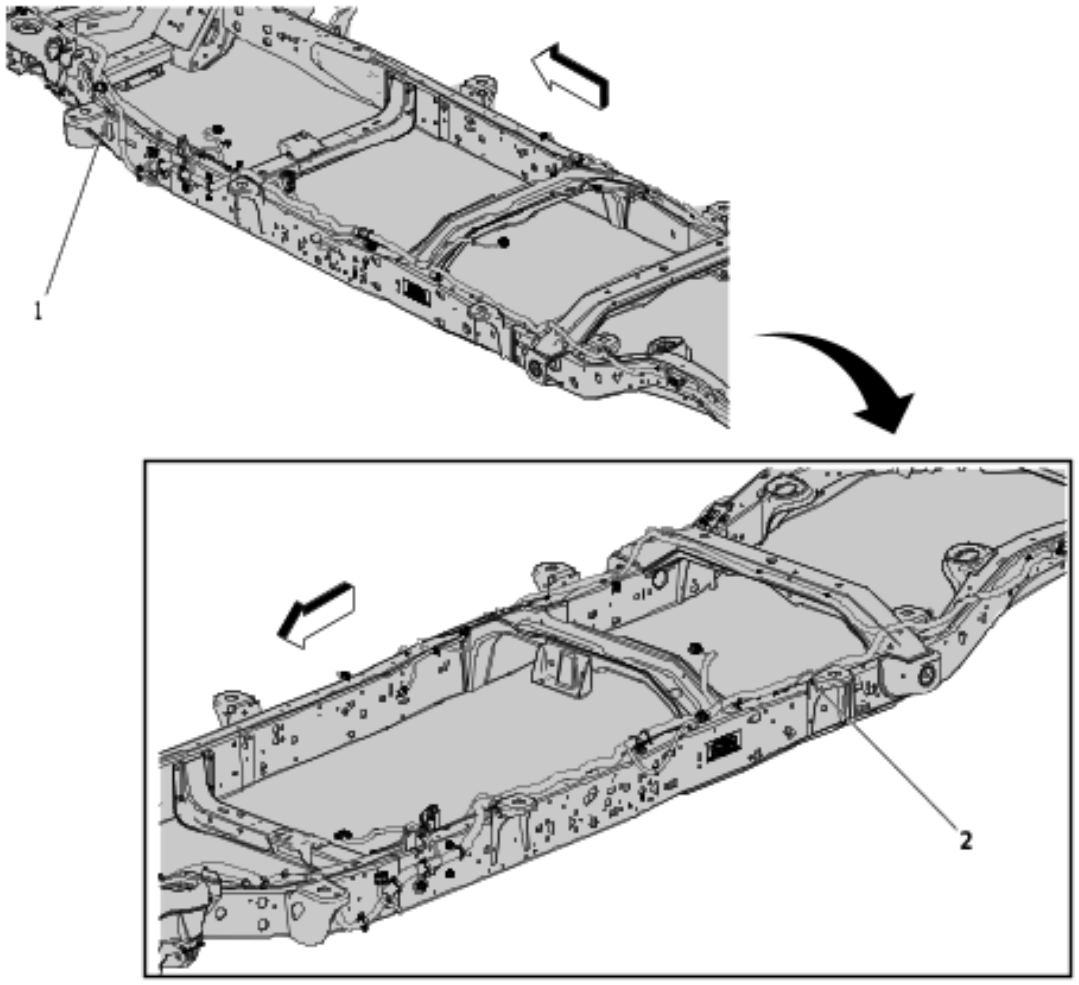

6087091

Items
(1) G300 Chassis Wiring Harness
(2) G404 Chassis Wiring Harness

G301 and G302

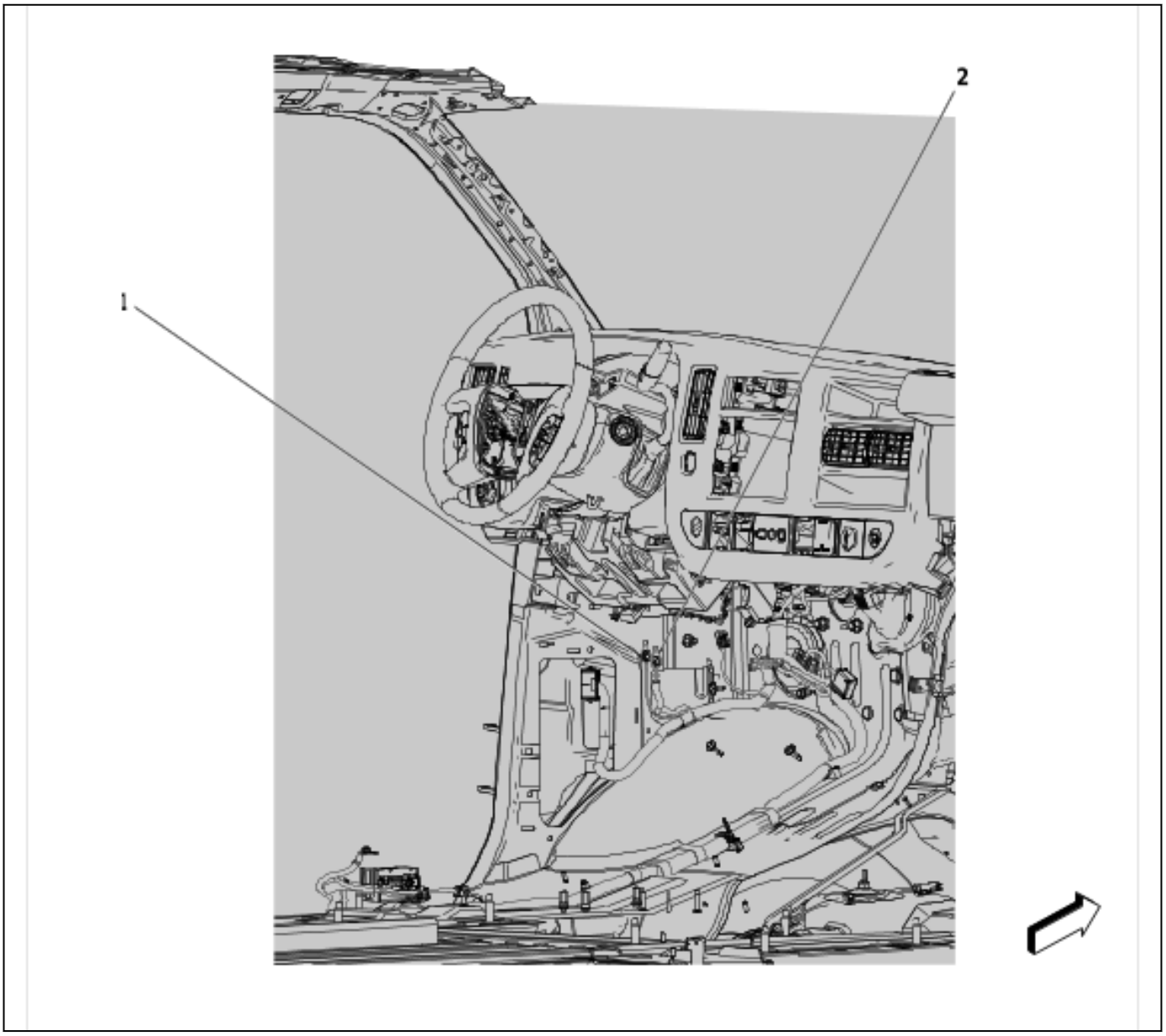

6043576

Items
(1) G301 Instrument Panel Wiring Harness
(2) G302 Instrument Panel Wiring Harness

G304

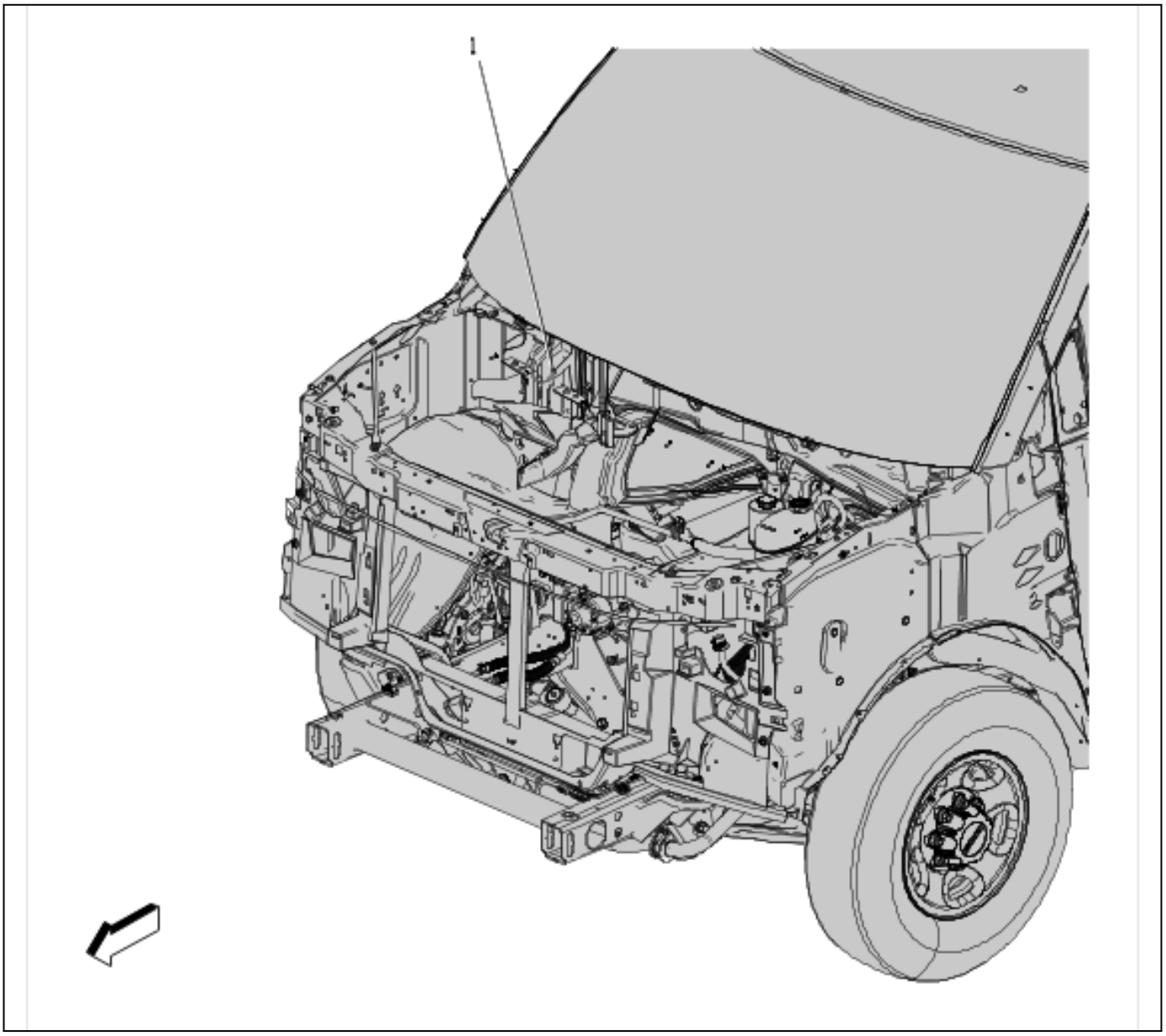

6043578

Items
(1) G304 Instrument Panel Wiring Harness

G305

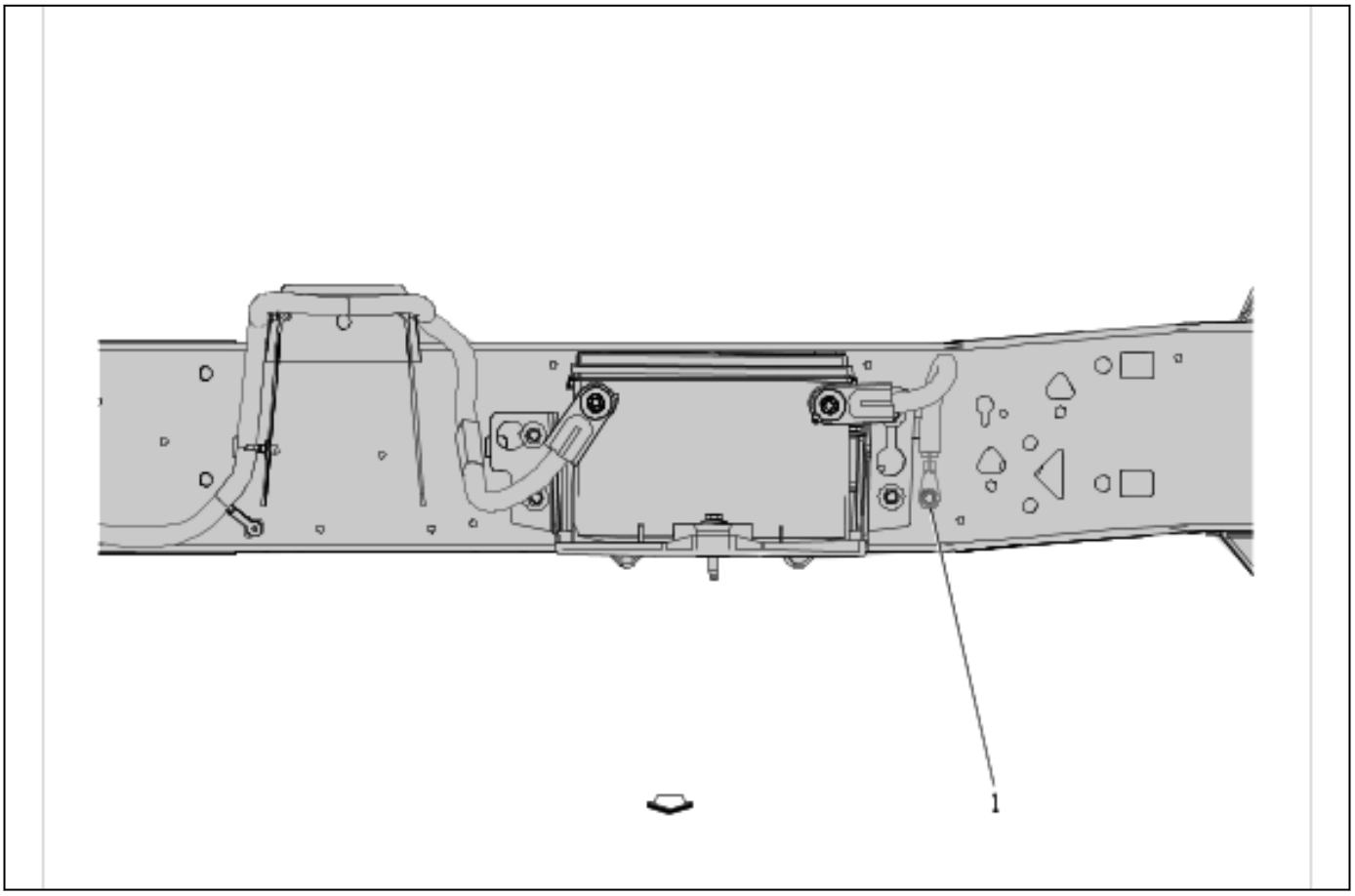

6040693

Items
(1) G305 Auxiliary Battery Negative Cable (TP3)

G401 and G402 - Passenger/Cargo

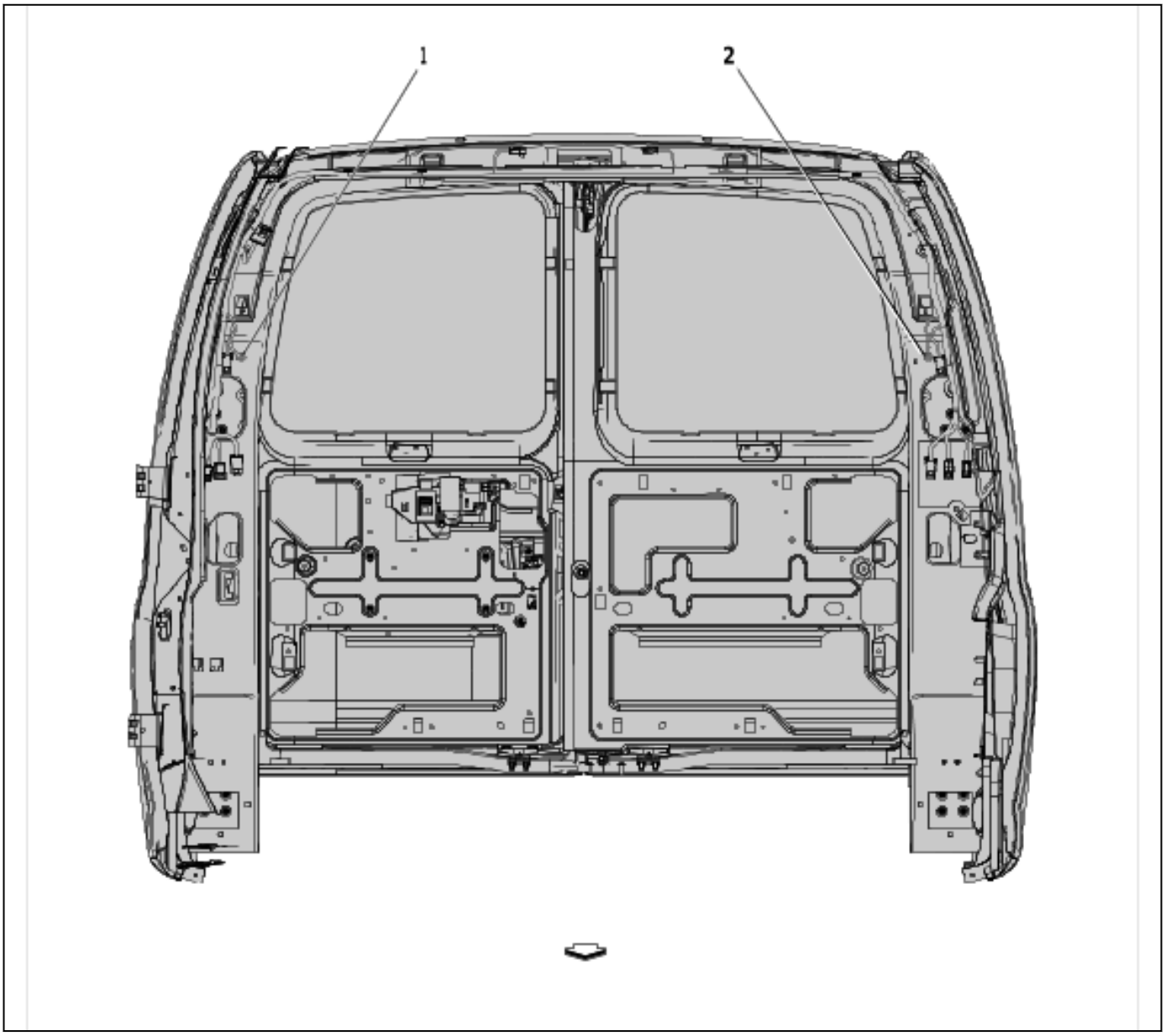

6003038

Items
(1) G401 Body Wiring Harness (Passenger/Cargo)
(2) G402 Body Wiring Harness (Passenger/Cargo)

G404 - Cutaway

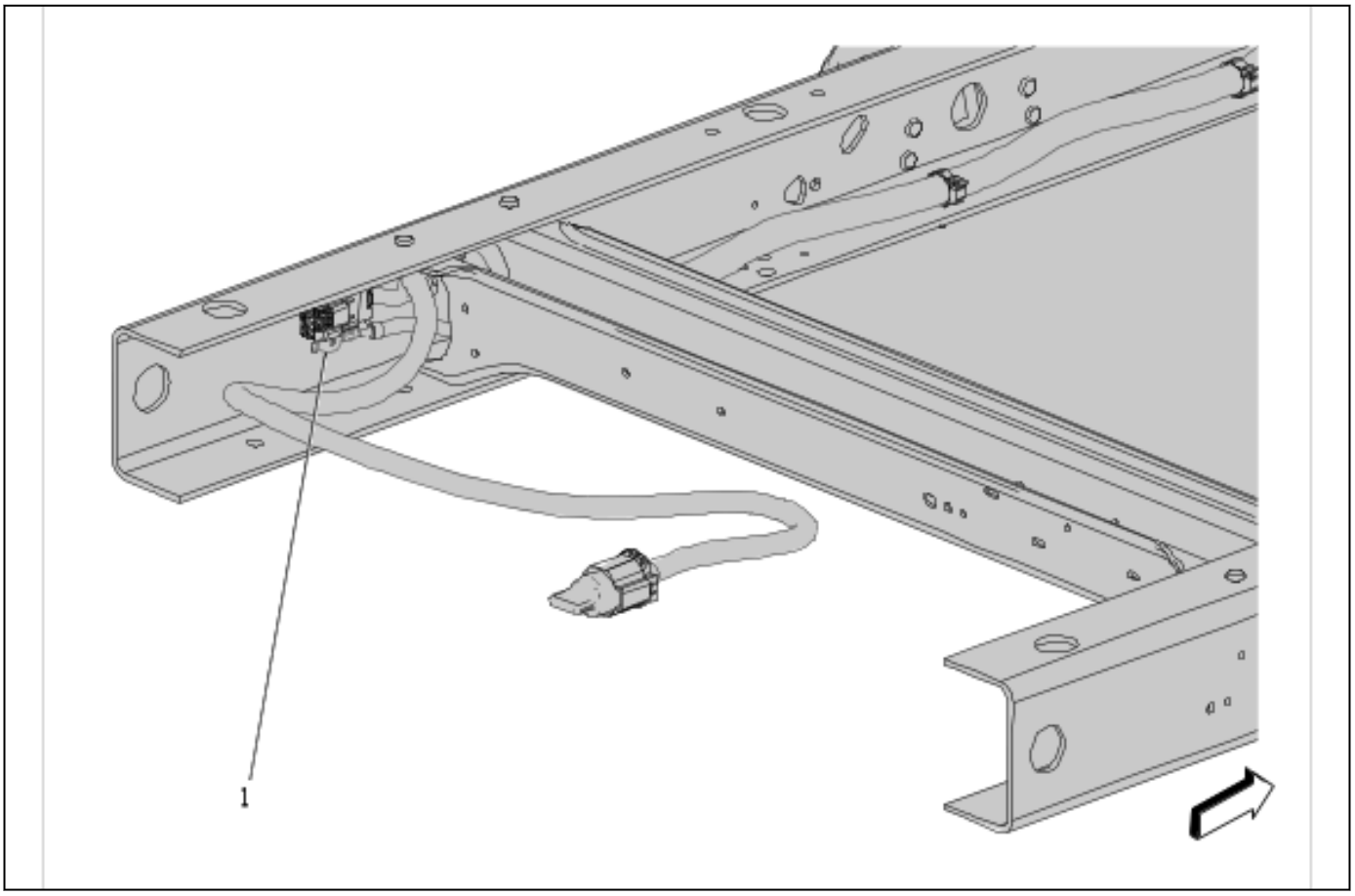

6003085

Items
(1) G404 Chassis Wiring Harness

Wiring Systems and Power Management

Specifications

Fastener Specifications

Reusable Threaded Fastener Tightening Specifications

Note: All fasteners listed in this table can be reused after removal.	
Application	**Specification**
	Metric (English)
Front Compartment Fuse Block Cable Nut	20 N•m (15 lb ft)
Junction Block Base Nut	5 N•m (44 lb in)
Junction Block to the Junction Block Base Bolt	5 N•m (44 lb in)
Lock Cylinder Housing TORX® Screw	7 N•m (62 lb in)
M6 Nut	8 N•m (71 lb in)
M7 Nut	9 N•m (80 lb in)
M8 Nut	22 N•m (16 lb ft)
M10 Nut	45 N•m (33 lb ft)
Positive Battery Cable Nut	10 N•m (89 lb in)

Schematic and Routing Diagrams

How to Use Electrical Schematics

Information Overview

The following explains some of the key parts of the GM wiring diagrams. Included are:

- Color Abbreviations
- Electronic Delivery Navigation Features

Color Abbreviations

The following sequence is used when depicting wire colors:

1. Color modifier of the wire, such as light or dark (if applicable)
2. Primary color of the wire
3. Secondary color of the wire (tracer/stripe)

Wire insulation and connector body colors in schematic information are abbreviated with a two character code as listed below.

Abbreviation	Color	Abbreviation	Color
AM	Amber	OG	Orange
BARE	Bare	PK	Pink
BG	Beige	PU	Purple
BK	Black	RD	Red
BN	Brown	RU	Rust
BU	Blue	SR	Silver
CL	Clear	TL	Teal
CR	Cream	TN	Tan
CU	Curry	TQ	Turquoise

Abbreviation	Color	Abbreviation	Color
GD	Gold	VT	Violet
GN	Green	WH	White
GY	Gray	YE	Yellow
NA	Natural	—	—
Color Modifiers			
L	Light	D	Dark

Additionally, industry standard cable types are not identified by color, but are listed by cable type as follows:

Abbreviation	Cable Type
COAX	Coax Cable
ENET	Ethernet
FW	Flat Wire
HDMI	High Definition Multimedia Interface
LVDS	Low-voltage Differential Signaling
TWINAX	Twinax Cable
USB	Universal Serial Bus

Electronic Delivery Navigation Features

The schematics information has been enhanced for electronic delivery and the following explains the features that are now available.

The enhanced features are categorized into three types:

- Mouse-overs, which are active when the mouse pointer is placed over the activated area
- Hotspots (links to other information), which are active by placing the mouse pointer over the activated area and clicking the left mouse button
- Hotspot Target Highlighting, which is when linking from one graphic to another graphic, the point of interest will be highlighted in red. This feature is available only when linking from a schematic graphic to a component locator/harness routing view, or when linking from a schematic to an electrical center identification view

Depending on the amount of information that is linked to from a hotspot, the mouse pointer changes shape.

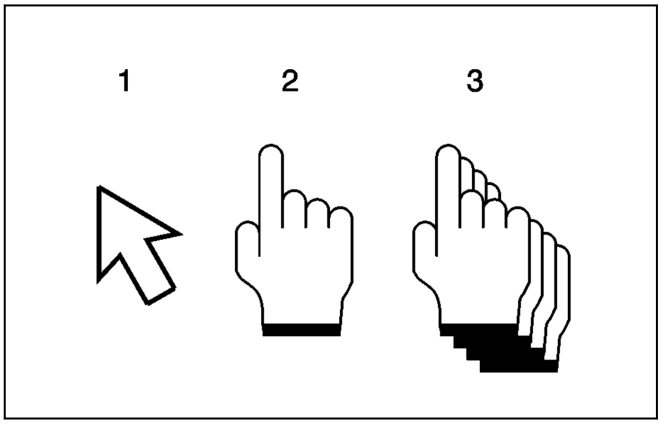

3819127

1. Basic mouse pointer – this means there are no hotspots available, but there may be a mouse-over available.
2. Single hand pointer – this means there is a mouse-over and hotspot link to a single document. Clicking on these areas will automatically take you to the target link.
3. Multiple hand pointer – this means there is a mouse-over and hotspot link to a multiple document. Clicking on these areas will bring up a pop-up menu that will display all available links. You may then select one of the available links clicking on one of the displayed links.

To see which areas of the schematic information have an available hotspot and/or a mouse-over, select and hold down the highlight hotspots button of the cgm viewer. This will highlight all areas of the graphic that have an available hotspot and/or a mouse-over in red. Once the button is released, the areas of the graphic will no longer be highlighted.

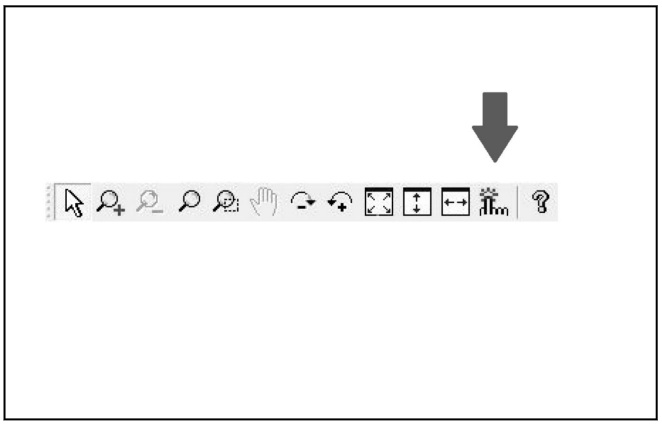

3819130

Each type of schematic related information has some level of these features. The schematic related information consists of the following information types:

- Schematics
- Connector End Views
- Component Locator Views
- Harness Routing Views
- Electrical Center Identification Views
- Master Electrical Component List
- Master Electrical Schematic Icons
- Schematics RPO Code List
- Circuit Number/Wire Colors
- Wire Lines
- Connector Cavities

Schematics

An electrical schematic hotspot is an activated icon or area in the schematic that can be cursor selected to link to additional information. Additionally, each of the hotspots in schematics has a mouse-over.

Hotspots in schematics are categorized into three types:

- Schematic Navigational Icon Hotspots
- Schematic Informational Icon Hotspots
- Schematic Navigational Hotspots

Schematic Navigational Icon Hotspots

The following lists icons that may appear on the upper right corner of a schematic that have an available mouse-over and hotspot.

Icon	Mouse-Over	Hotspot Link to Information
1990537	Master Electrical Component List	Links to the vehicle Master Electrical Component List that shows all electrical components and harness items on the vehicle and has links to any available views
1990538	Title of the subsystem description and operation	Links to the System Description and Operation

Icon	Mouse-Over	Hotspot Link to Information
1988674	Control Module References	Links to the Control Module References table
1990541	Title of the next schematic page	Links to the next schematic of the subsystem schematics
1990542	Title of the previous schematic page	Links to the previous schematic of the subsystem schematics

Schematic Informational Icon Hotspots

The following lists the icons that may appear anywhere on a schematic that have an available mouse-over and hotspot.

Icon	Mouse-Over	Hotspot Link to Information
Danger 1988672	Master Electrical Schematic Icons	Links to the vehicle Master Electrical Schematic Icons list that describes the message for the icon.
High Voltage 1988673	Master Electrical Schematic Icons	Links to the vehicle Master Electrical Schematic Icons list that describes the message for the icon.
Caution 1990543	Master Electrical Schematic Icons	Links to the vehicle Master Electrical Schematic Icons list that describes the message for the icon.
Supplemental Restraint 1988667	Master Electrical Schematic Icons	Links to the vehicle Master Electrical Schematic Icons list that describes the message for the icon.

Icon	Mouse-Over	Hotspot Link to Information
Pedestrian Impact 3814889	Master Electrical Schematic Icons	Links to the vehicle Master Electrical Schematic Icons list that describes the message for the icon.
Additional Information 1988670	Master Electrical Schematic Icons	Links to the vehicle Master Electrical Schematic Icons list that describes the message for the icon.

Schematic Navigational Hotspots

In addition to the navigational icons, schematics have other active hotspots that link to supporting information such as related schematics, component locator views, harness routing views, and connector end views.

These hotspots can be either text based or symbol based. The following are the items that will have a mouse-over and hotspot.

Schematic Title Circuit References

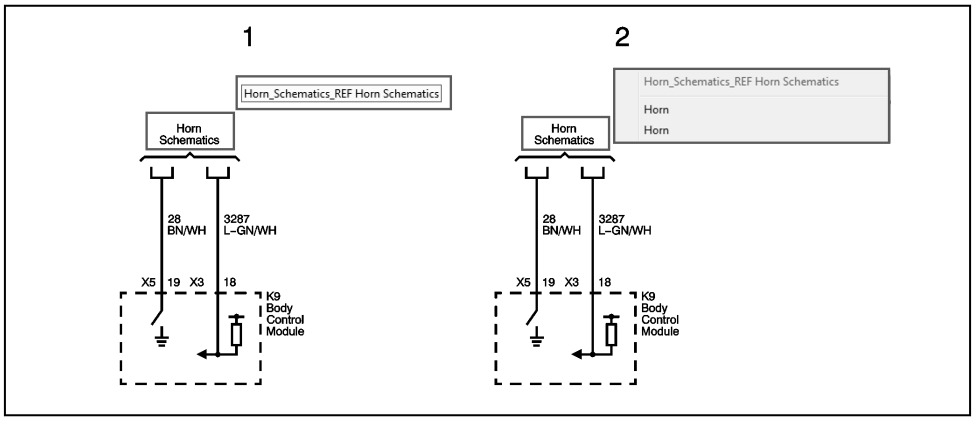

3814891

1. **Mouse-over:** Displays the title of the schematic page linked to.
2. **Hotspot Link to Information:** Links to the individual subsystem schematic page(s) that shows the circuit in detail. If multiple circuits are included, or if the circuit is shown in multiple schematics, a menu will appear when the link is selected. This menu includes links to all schematics that contain the same circuit number as the circuit being referenced. Additionally, when the target schematic is opened, the referenced circuit will be highlighted to draw visual attention. Note that when there are multiple target links, the links may appear to be duplicate in the menu, however, they are not. The exact same title is repeated for each circuit number that is pointing to the same target schematic. A future update will include the circuit number before the link description to further assist in link selection.

Serial Data Functional Circuit Icon

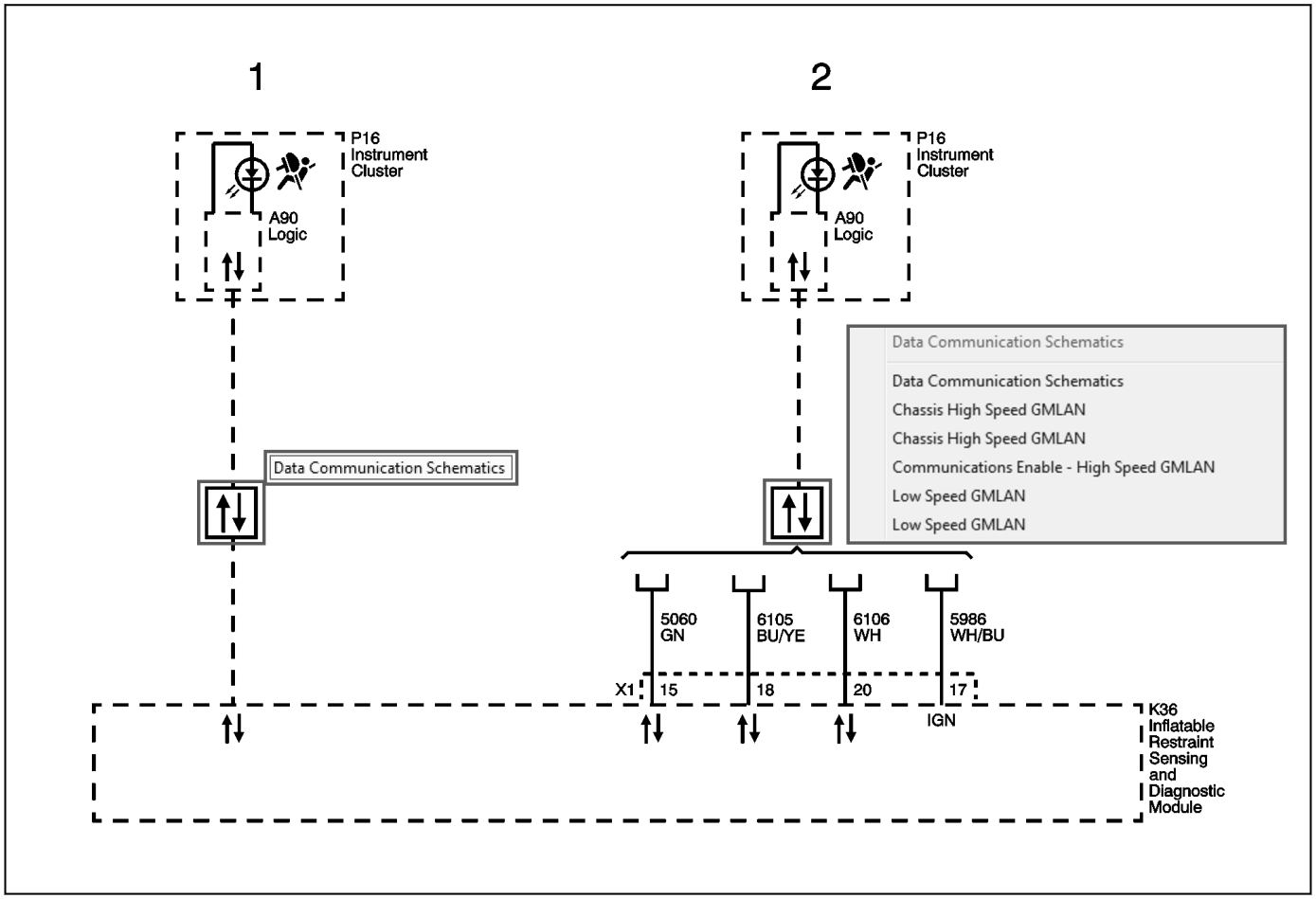

3818612

1. **Mouse-over:** Displays the schematic title Data Communication Schematics.
2. **Hotspot Link to Information:**
   - ⇒ When a dashed serial data wire and icon are shown without any circuit numbers, the serial data circuit icon will link to the complete list of Data Communication schematic pages, and not a specific schematic. This is due to no circuit numbers are shown.
   - ⇒ When a circuit wire(s) are shown with circuit numbers, a menu will appear when the link is selected. This menu includes links to the list of Data Communication schematic pages as well as links to the individual schematics that contain the same circuit number as the circuit being referenced. Additionally, when the target schematic is opened, the referenced circuit will be highlighted to draw visual attention. Note that when there are multiple target links, the links may appear to be duplicate in the menu, however, they are not. The exact same title is repeated for each circuit number that is pointing to the same target schematic. A future update will include the circuit number before the link description to further assist in link selection.

Fuse/Circuit Breaker Symbol and Name within Subsystem Schematics

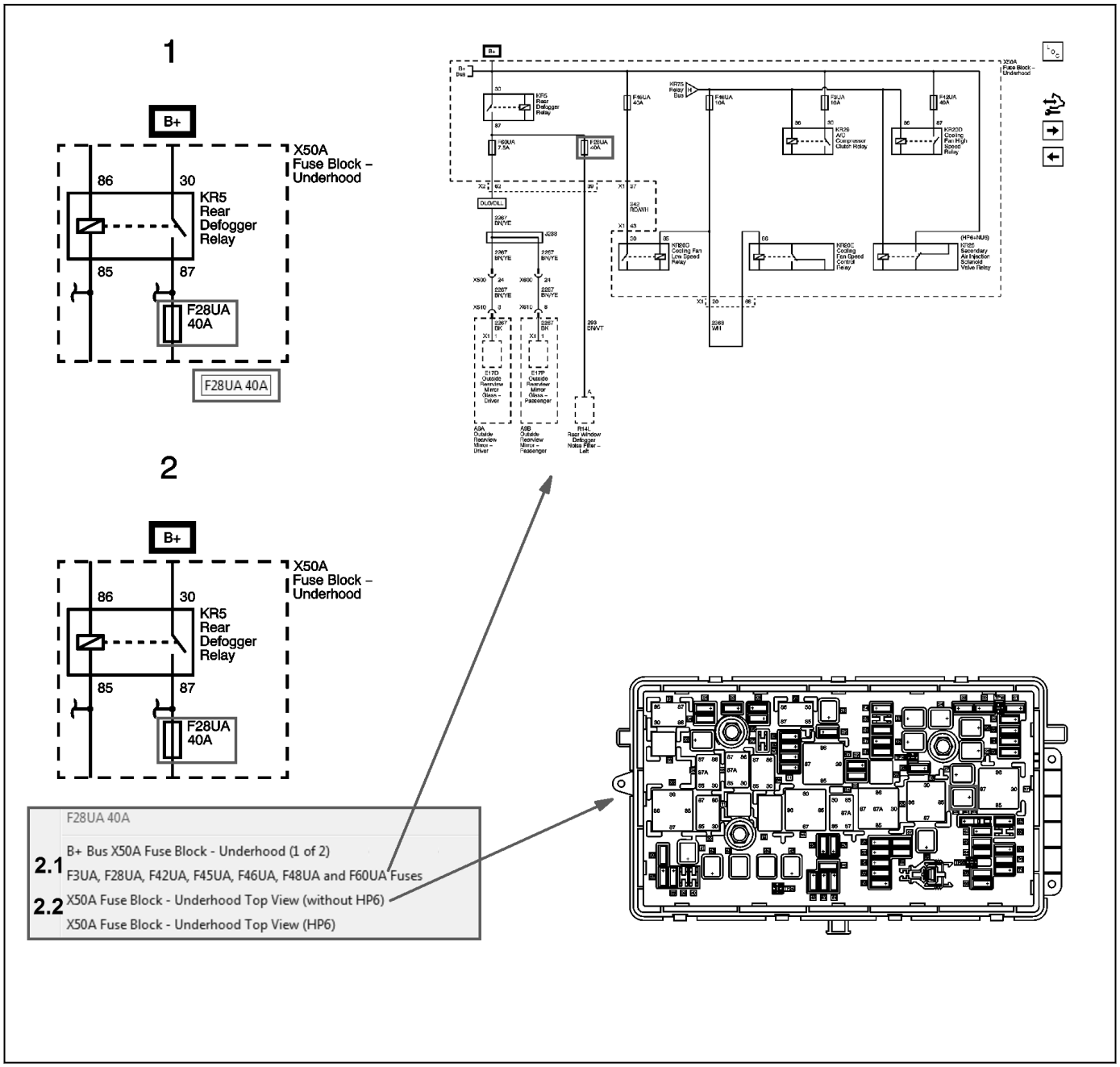

3818725

1. **Mouse-over:** Displays the code and the amperage of the protection device.
2. **Hotspot Link to Information:**
   - ⇒ When multiple links are available, a menu will appear when the link is selected. This menu includes all available links in a structured sequence.
   - 2.1. Links to the individual schematic page(s) within the Power Distribution Schematics where the circuits are shown in detail. Additionally, when the target schematic is opened, the circuit protection device will be highlighted to draw visual attention.
   - 2.2. Links to individual fuse block top or bottom view(s) within the Electrical Center Identification Views and will show where the device is located in the fuse block. Additionally, when the target view is opened, the device outline will be highlighted for visual attention.

Ground Symbol/Name in Subsystem Schematics

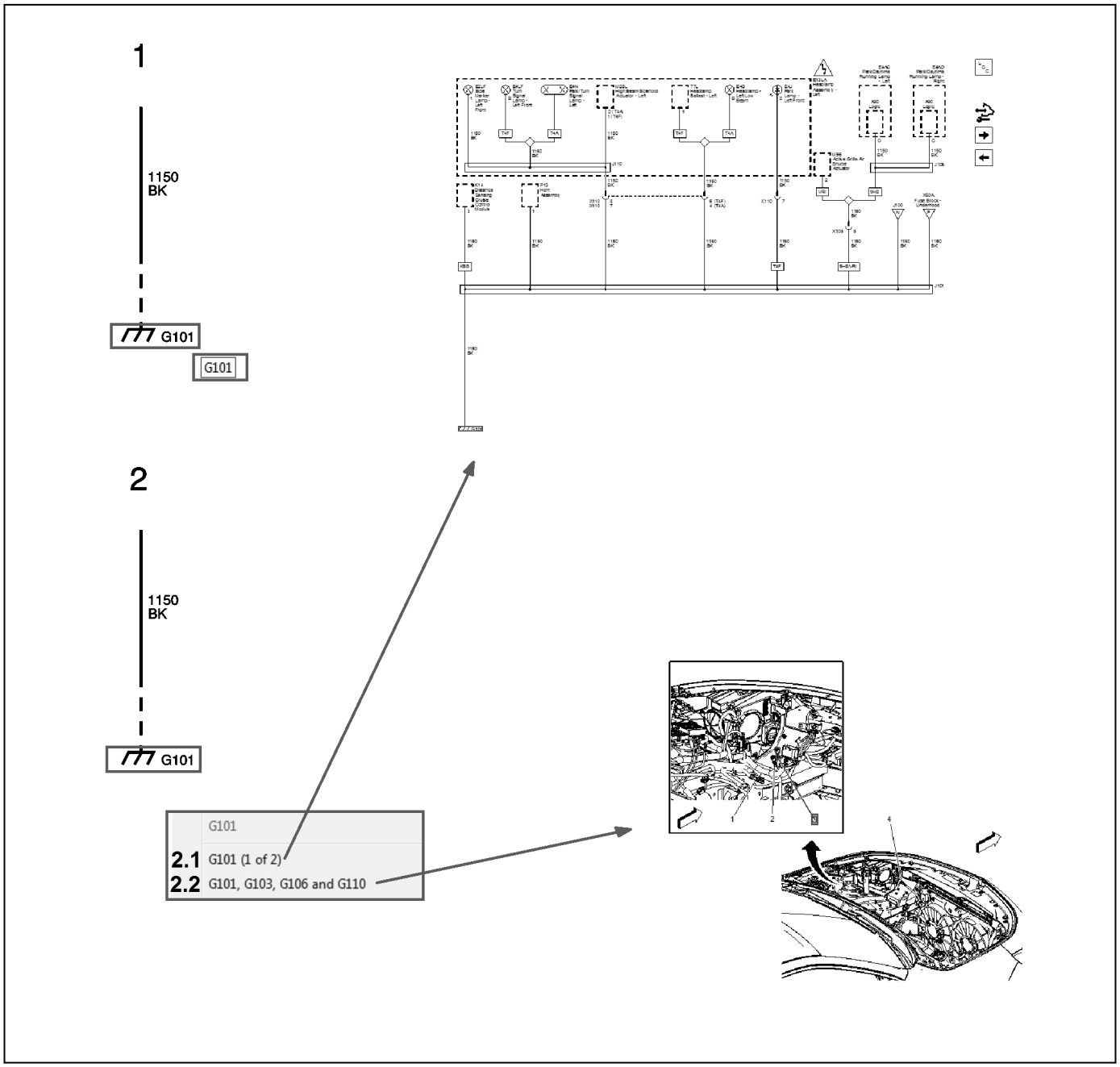

3818918

1. **Mouse-over:** Displays the ground number.
2. **Hotspot Link to Information:**
   - ⇒ When multiple links are available, a menu will appear when the link is selected. This menu includes all available links in a structured sequence.
   - 2.1. Links to the individual schematic page(s) within the Ground Distribution Schematics where the circuits are shown in detail. Additionally, when the target schematic is opened, the ground will be highlighted to draw visual attention.
   - 2.2. Links to the individual locator view(s) within the Ground Views and will show where the ground is located on the vehicle. Additionally, when the target view is opened, the ground and callout leader line/number will be highlighted to draw visual attention.

Body Control Module High-Side Driver Output Symbol/Driver Source Fuse Name in Subsystem Schematics

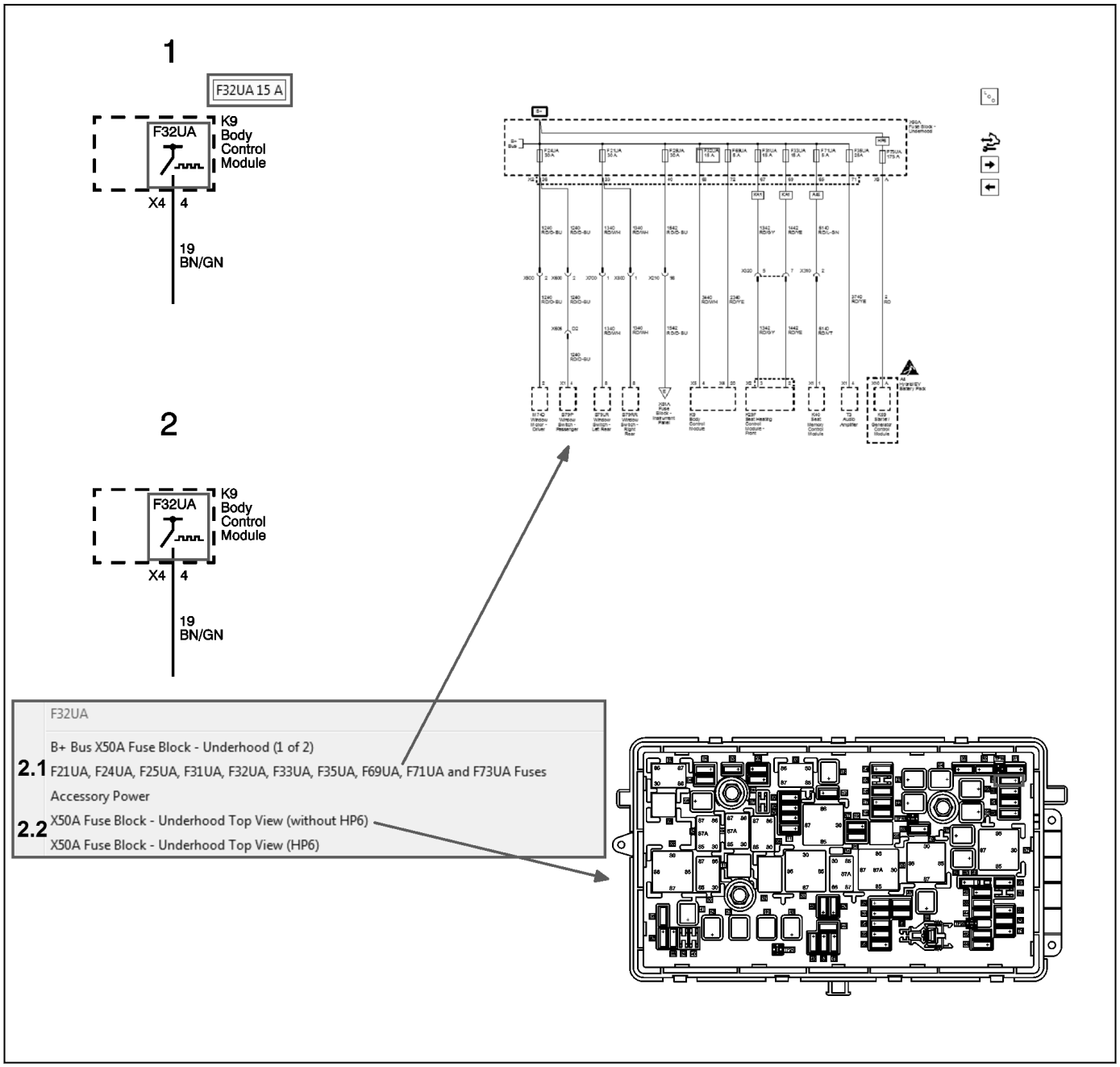

3819026

1. **Mouse-over:** Displays the code of the protection device that supplies the high-side driver output circuit.
2. **Hotspot Link to Information:**
   - ⇒ When multiple links are available, a menu will appear when the link is selected. This menu includes all available links in a structured sequence.
   - 2.1. Links to the individual schematic page(s) within the Power Distribution Schematics where the circuits are shown in detail. Additionally, when the target schematic is opened, the circuit protection device will be highlighted to draw visual attention.
   - 2.2. Links to individual fuse block top or bottom view(s) within the Electrical Center Identification Views and will show where the device is located in the fuse block. Additionally, when the target view is opened, the device outline will be highlighted for visual attention.

Component Name in Power and Ground Distribution Schematics

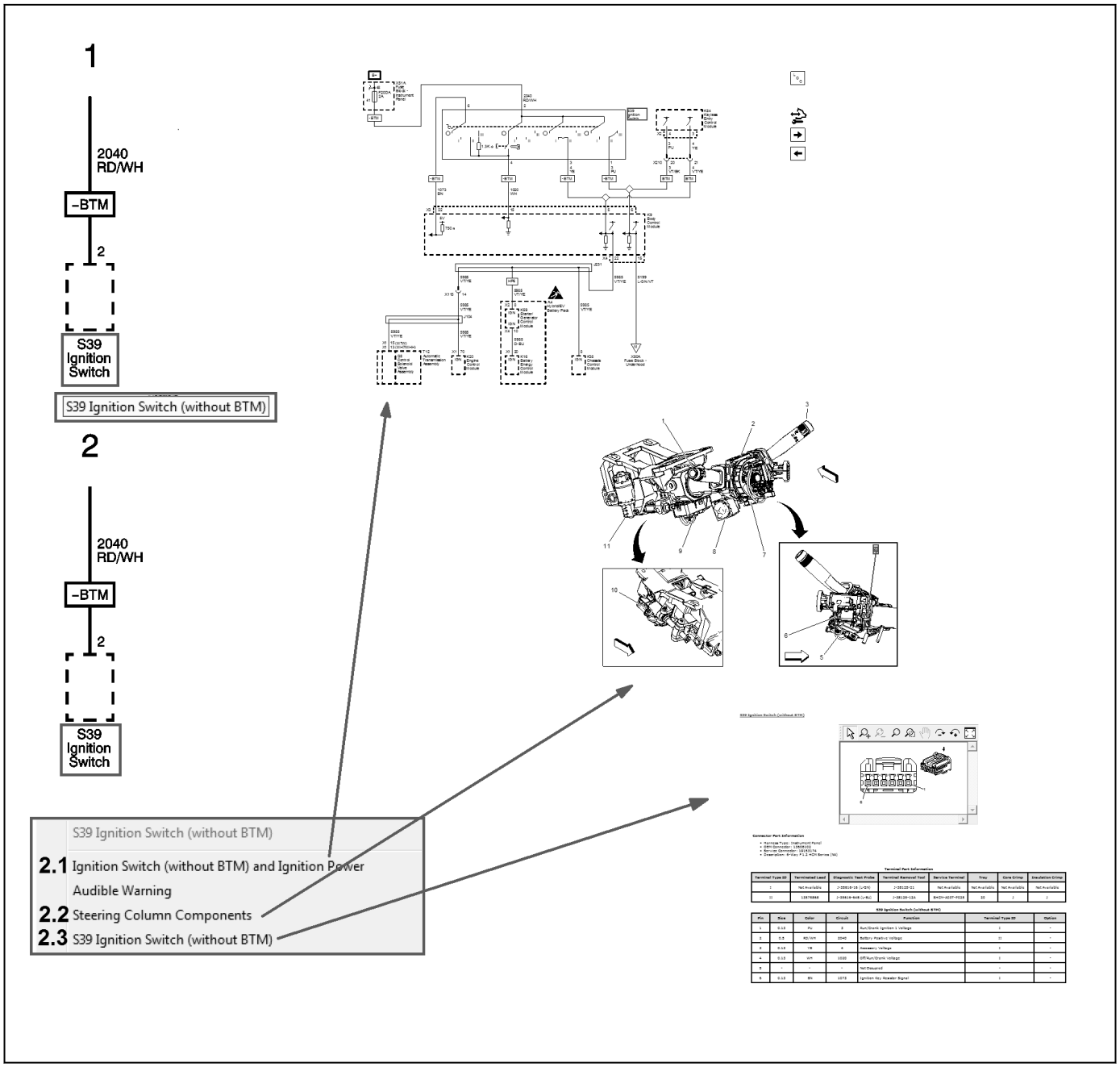

3819063

1. **Mouse-over:** Displays the code and name of the component.
2. **Hotspot Link to Information:**
   ⇒ When multiple links are available, a menu will appear when the link is selected. This menu includes all available links in a structured sequence.
   2.1. Links to the individual schematic page(s) within the Subsystem Schematic(s) where the circuits are shown in detail. Additionally, when the target schematic is opened, the component code and name will be highlighted to draw visual attention.
   2.2. Links to the individual locator view(s) within the applicable component view category and will show where the component is located on the vehicle. Additionally, when the target view is opened, the component and callout leader line/number will be highlighted to draw visual attention.
   2.3. Links to individual connector end view(s) within the Component Connector End Views.

Twisted Pair Symbols

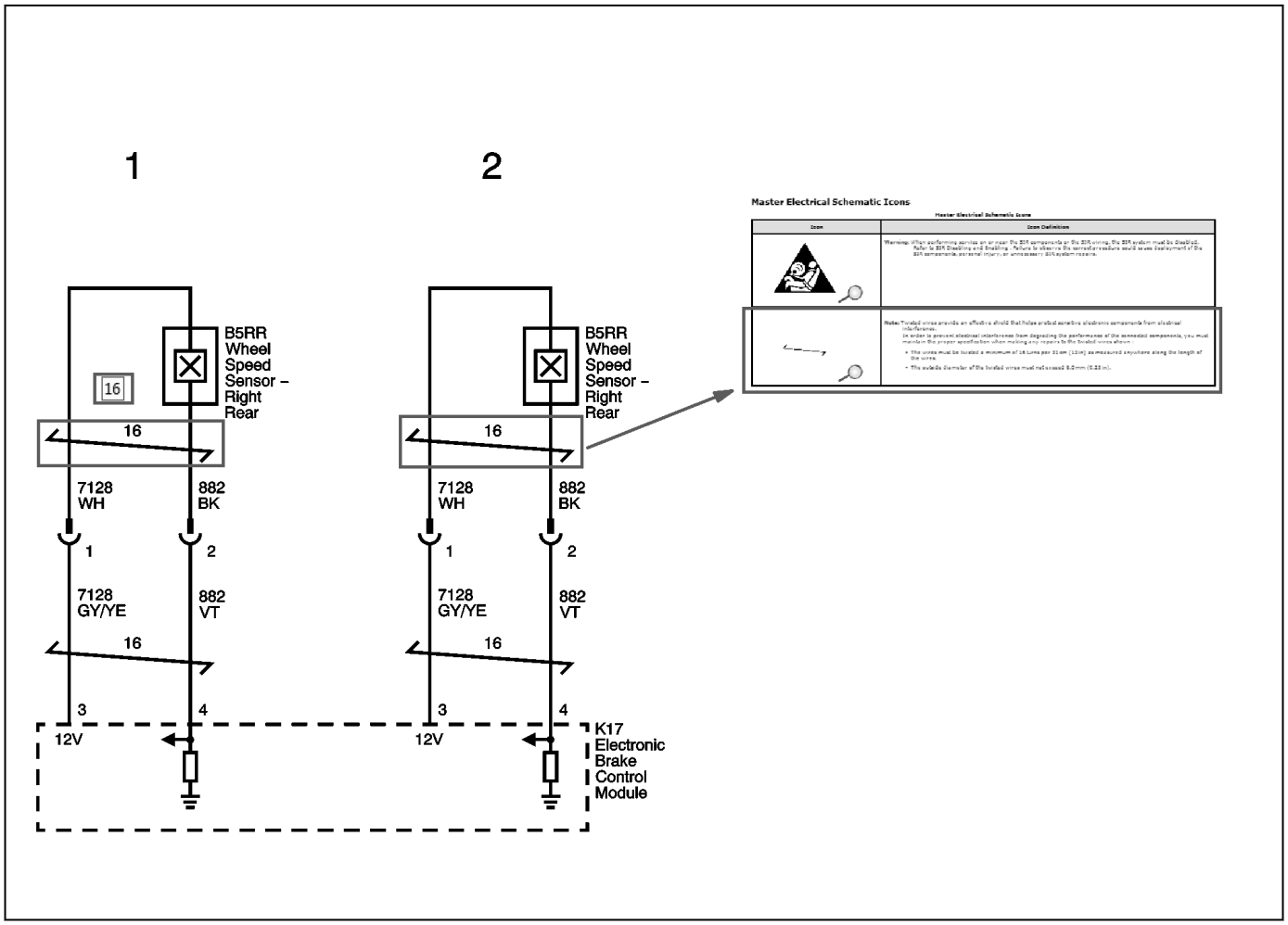

3819064

1. **Mouse-over:** Displays the repair specification for the number of twists of the wire within the specified distance.
2. **Hotspot Link to Information:** Links to the Master Electrical Schematic Icons list that shows the icon along with the repair specification details for the wire.

Relay Name (located within a block)

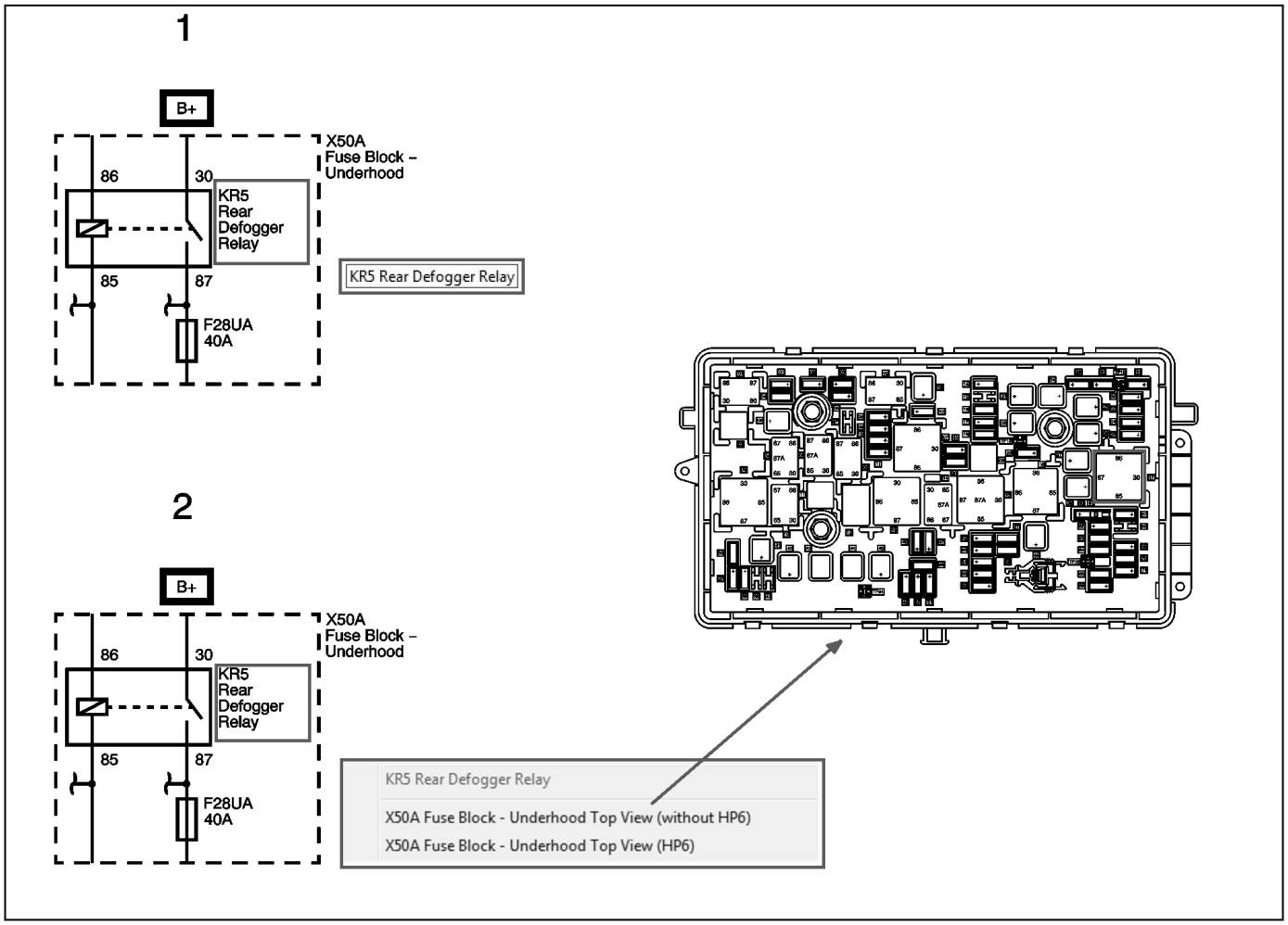

3819124

1. **Mouse-over:** Displays the relay code and name.
2. **Hotspot Link to Information:** Links to individual fuse block top or bottom view(s) within the Electrical Center Identification Views and will show where the device is located in the fuse block. Additionally, when the target view is opened, the device outline will be highlighted for visual attention.

Component Name in Subsystem Schematics

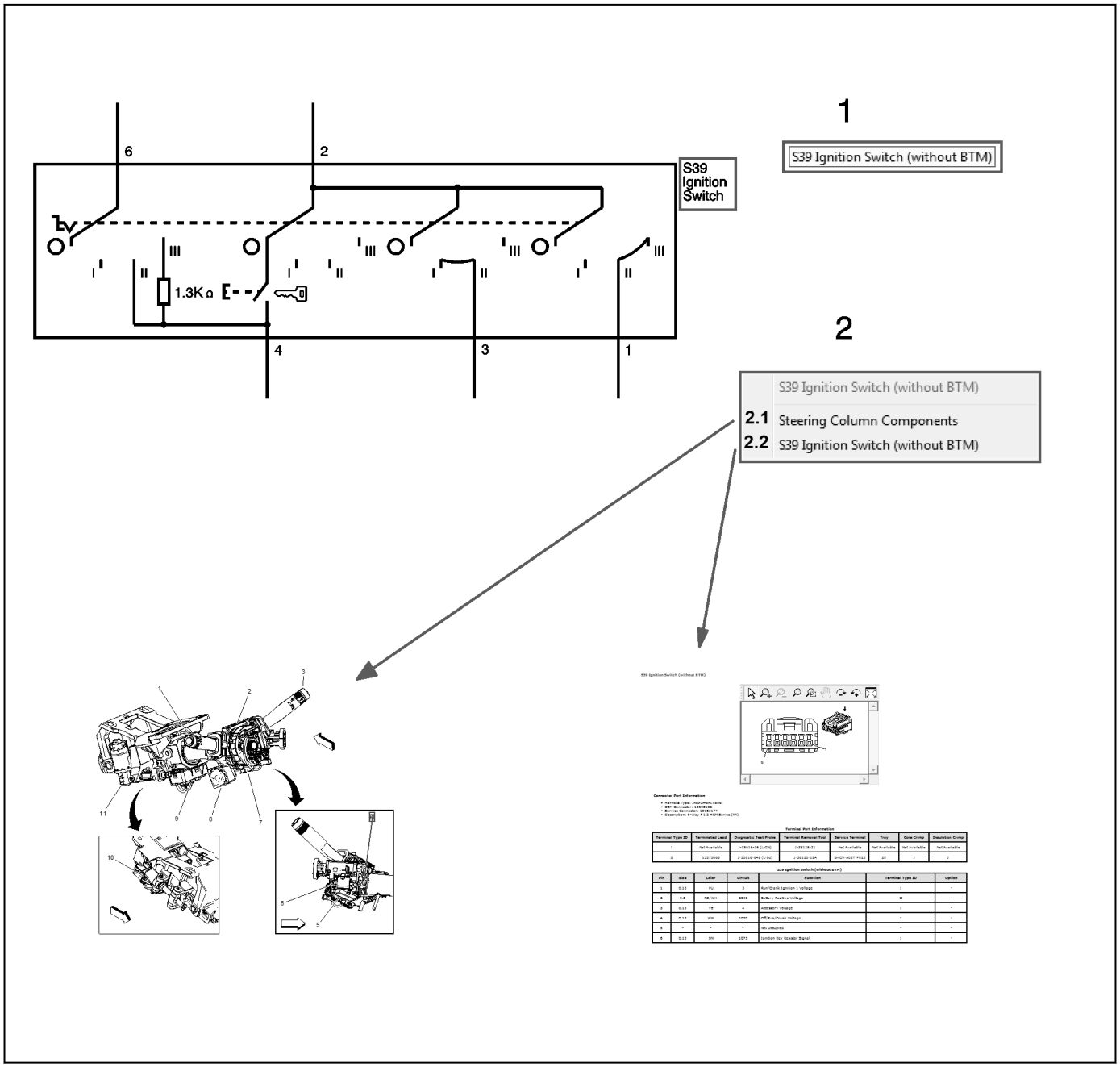

3819141

1. **Mouse-over:** Displays the code and name of the component.
2. **Hotspot Link to Information:**
   ⇒ When multiple links are available, a menu will appear when the link is selected. This menu includes all available links in a structured sequence.
   2.1. Links to the individual locator view(s) within the applicable component view category and will show where the component is located on the vehicle. Additionally, when the target view is opened, the component and callout leader line/number will be highlighted to draw visual attention.
   2.2. Links to individual connector end view(s) within the Component Connector End Views.

Splice Names

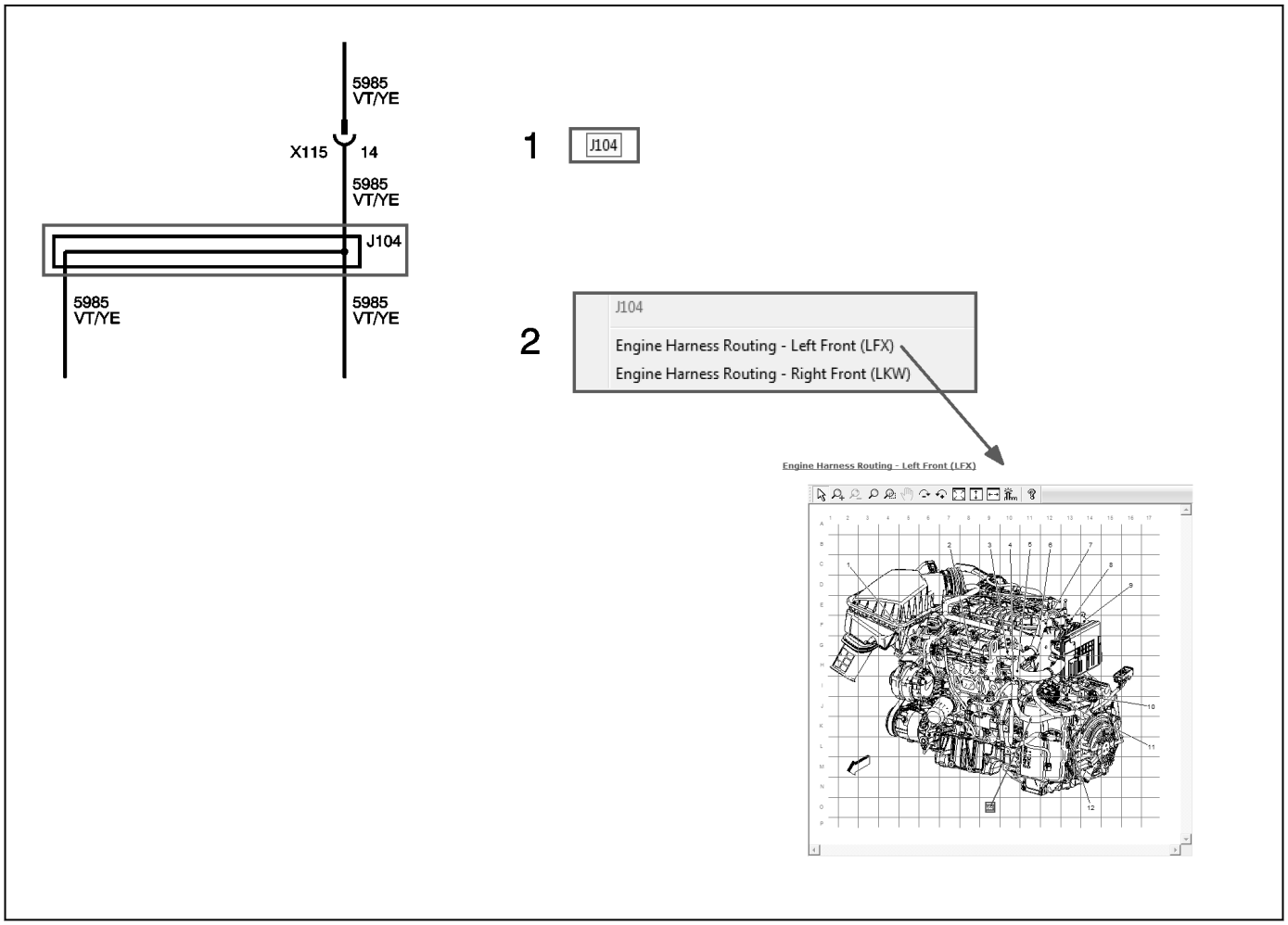

3819287

1. **Mouse-over:** Displays the code of the harness splice.
2. **Hotspot Link to Information:** Links to the individual harness routing view(s) within the Harness Routing Views and will show where the harness item is located on the vehicle harness. Additionally, when the target view is opened, the harness item and callout leader line/number will be highlighted to draw visual attention.

Splice Pack Names

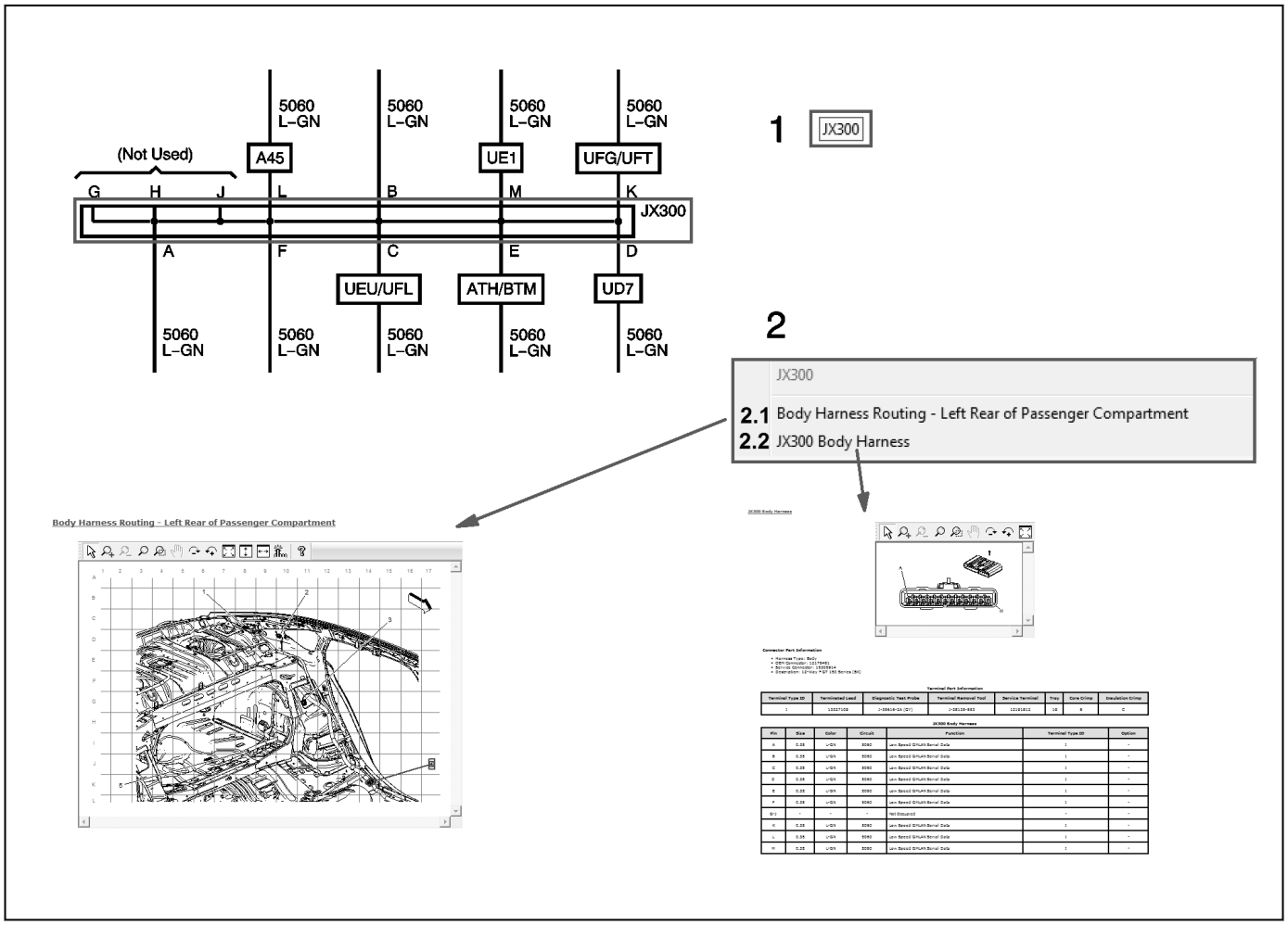

3819454

1. **Mouse-over:** Displays the code of the harness splice pack.
2. **Hotspot Link to Information:**
   ⇒ When multiple links are available, a menu will appear when the link is selected. This menu includes all available links in a structured sequence.
   2.1. Links to the individual harness routing view(s) within the Harness Routing Views and will show where the harness item is located on the vehicle harness. Additionally, when the target view is opened, the harness item and callout leader line/number will be highlighted to draw visual attention.
   2.2. Links to individual connector end view(s) within the Splice Pack Connector End Views.

Inline Harness Connector Names

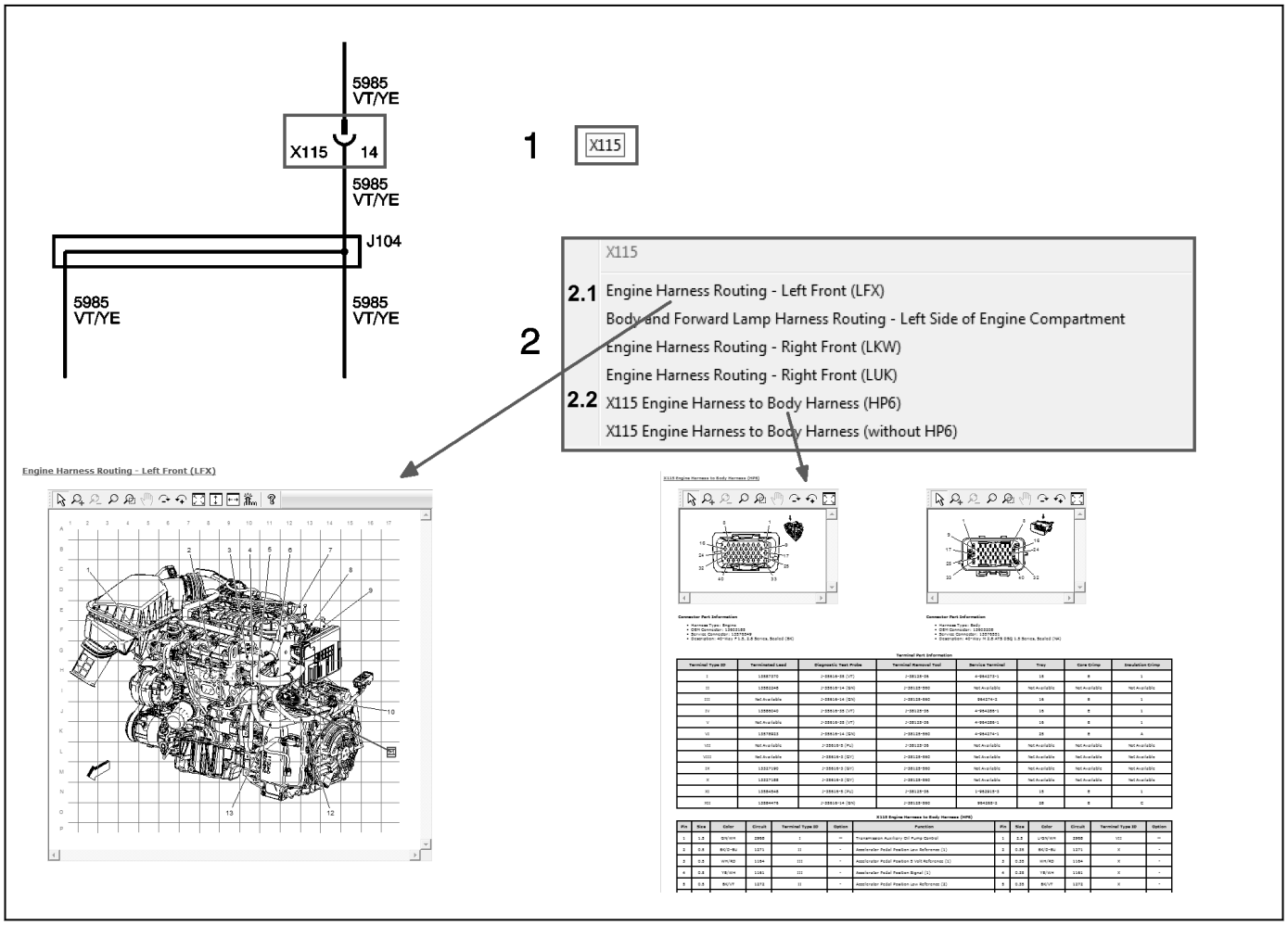

3819345

1. **Mouse-over:** Displays the code of the inline harness connector.
2. **Hotspot Link to Information:**
   ⇒ When multiple links are available, a menu will appear when the link is selected. This menu includes all available links in a structured sequence.
   2.1. Links to the individual harness routing view(s) within the Harness Routing Views and will show where the harness item is located on the vehicle harness. Additionally, when the target view is opened, the harness item and callout leader line/number will be highlighted to draw visual attention.
   2.2. Links to individual connector end view(s) within the Inline Harness Connector End Views.

Regular Production Option (RPO) Codes/Icons

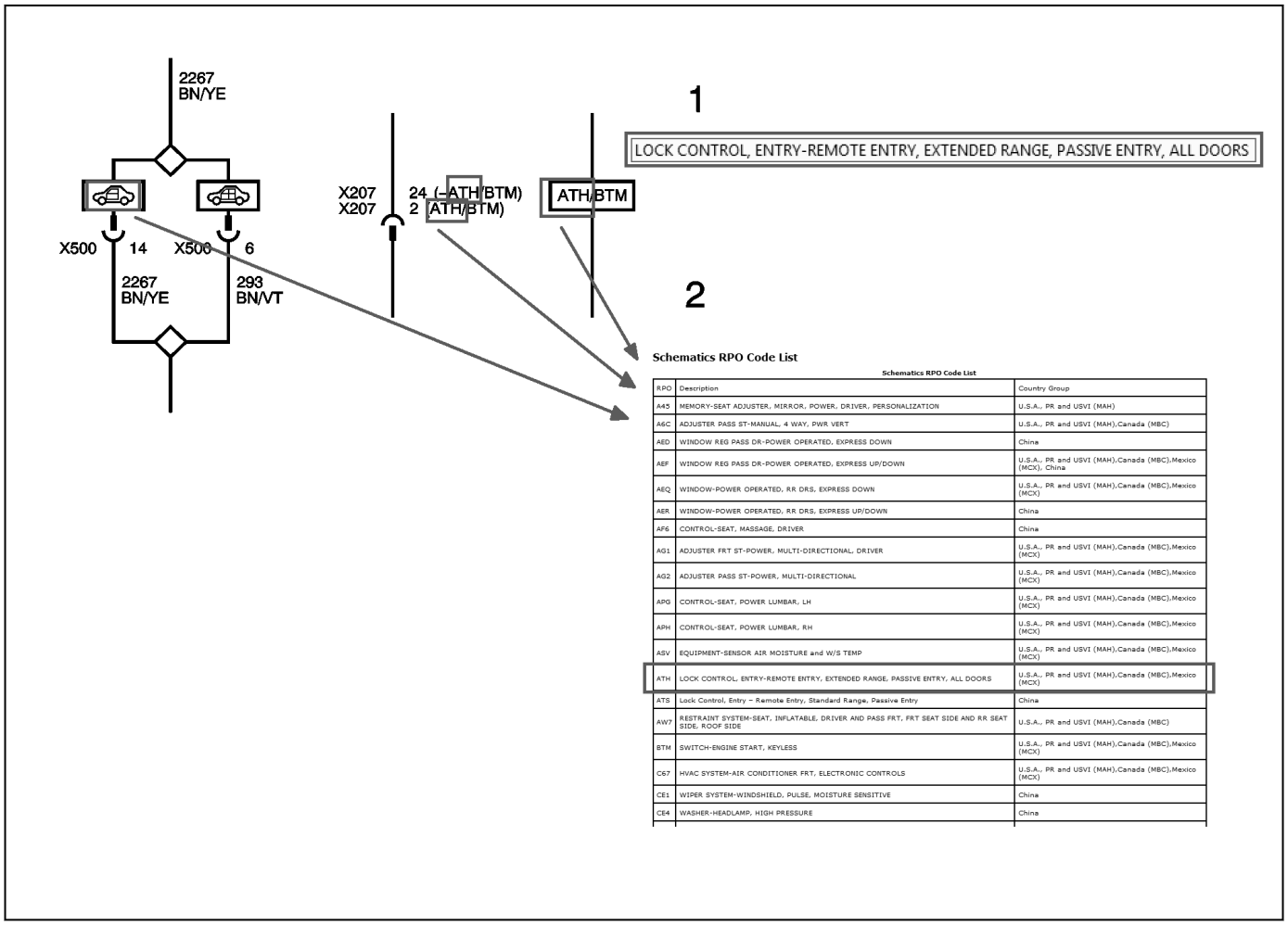

Schematics RPO Code List

RPO	Description	Country Group
A45	MEMORY-SEAT ADJUSTER, MIRROR, POWER, DRIVER, PERSONALIZATION	U.S.A., PR and USVI (MAH)
A6C	ADJUSTER PASS ST-MANUAL, 4 WAY, PWR VERT	U.S.A., PR and USVI (MAH),Canada (MBC)
AED	WINDOW REG PASS DR-POWER OPERATED, EXPRESS DOWN	China
AEF	WINDOW REG PASS DR-POWER OPERATED, EXPRESS UP/DOWN	U.S.A., PR and USVI (MAH),Canada (MBC),Mexico (MCX), China
AEQ	WINDOW-POWER OPERATED, RR DRS, EXPRESS DOWN	U.S.A., PR and USVI (MAH),Canada (MBC),Mexico (MCX)
AER	WINDOW-POWER OPERATED, RR DRS, EXPRESS UP/DOWN	China
AF6	CONTROL-SEAT, MASSAGE, DRIVER	China
AG1	ADJUSTER FRT ST-POWER, MULTI-DIRECTIONAL, DRIVER	U.S.A., PR and USVI (MAH),Canada (MBC),Mexico (MCX)
AG2	ADJUSTER PASS ST-POWER, MULTI-DIRECTIONAL	U.S.A., PR and USVI (MAH),Canada (MBC),Mexico (MCX)
APG	CONTROL-SEAT, POWER LUMBAR, LH	U.S.A., PR and USVI (MAH),Canada (MBC),Mexico (MCX)
APH	CONTROL-SEAT, POWER LUMBAR, RH	U.S.A., PR and USVI (MAH),Canada (MBC),Mexico (MCX)
ASV	EQUIPMENT-SENSOR AIR MOISTURE and W/S TEMP	U.S.A., PR and USVI (MAH),Canada (MBC),Mexico (MCX)
ATH	LOCK CONTROL, ENTRY-REMOTE ENTRY, EXTENDED RANGE, PASSIVE ENTRY, ALL DOORS	U.S.A., PR and USVI (MAH),Canada (MBC),Mexico (MCX)
ATS	Lock Control, Entry – Remote Entry, Standard Range, Passive Entry	China
AW7	RESTRAINT SYSTEM-SEAT, INFLATABLE, DRIVER AND PASS FRT, FRT SEAT SIDE AND RR SEAT SIDE, ROOF SIDE	U.S.A., PR and USVI (MAH),Canada (MBC)
BTM	SWITCH-ENGINE START, KEYLESS	U.S.A., PR and USVI (MAH),Canada (MBC),Mexico (MCX)
C67	HVAC SYSTEM-AIR CONDITIONER FRT, ELECTRONIC CONTROLS	U.S.A., PR and USVI (MAH),Canada (MBC),Mexico (MCX)
CE1	WIPER SYSTEM-WINDSHIELD, PULSE, MOISTURE SENSITIVE	China
CE4	WASHER-HEADLAMP, HIGH PRESSURE	China

3819777

1. **Mouse-over:** Displays the description of the RPO code as well as the country group names where the option is possible to order. Note that each RPO shown will have its own mouse-over and description. Also note that the mouse-over does not include any symbols indicating with (shown as a + sign if combined option) or without (shown as a – sign to mean without/except).
2. **Hotspot Link to Information:** Links to the Schematics RPO Code List that shows the RPO, the description of the option, and the country group names where the option is possible to order.

Circuit Number/Wire Colors

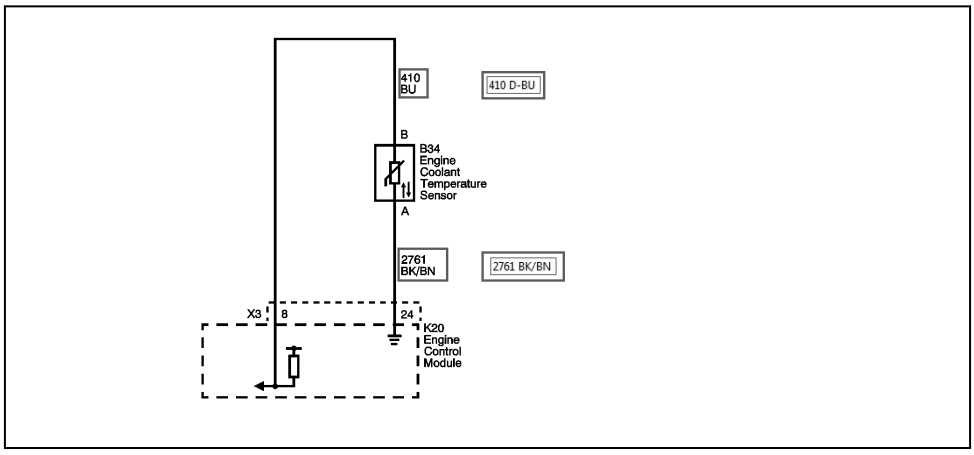

3819880

1. **Mouse-over:** Displays the circuit number (if shown) and the color abbreviation of the wire insulation. Refer to Color Abbreviations for an explanation of each wire color abbreviation. A future update may spell out the wire colors in all languages.
2. **Hotspot Link to Information:** None at this time.

Wire Lines

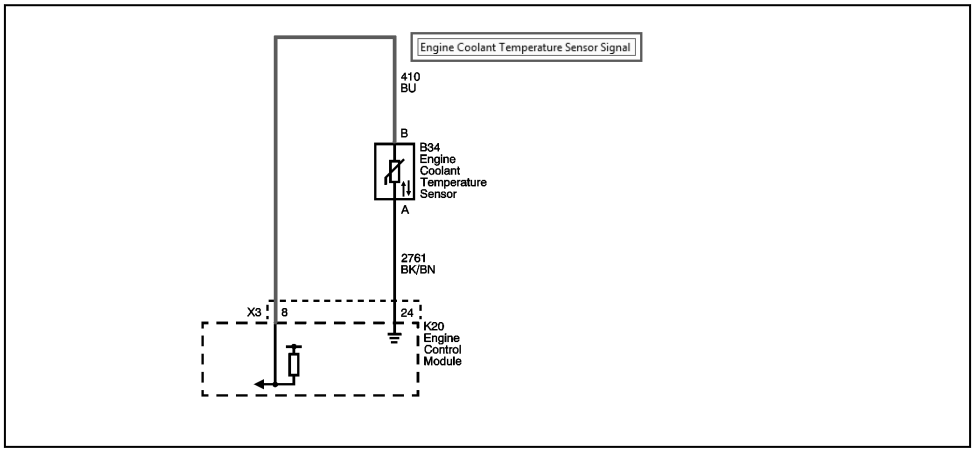

3819888

1. **Mouse-over:** Displays the circuit function of the wire as used on the vehicle. This same function is shown in the connector end view pinout table for the component the wire connects. Note if there is no circuit number shown, the circuit will not have an associated mouse-over.
2. **Hotspot Link to Information:** None at this time. A future update may include links to harness routing views to show the routing of the circuit within the vehicle harness.

Connector Identifiers and Cavities

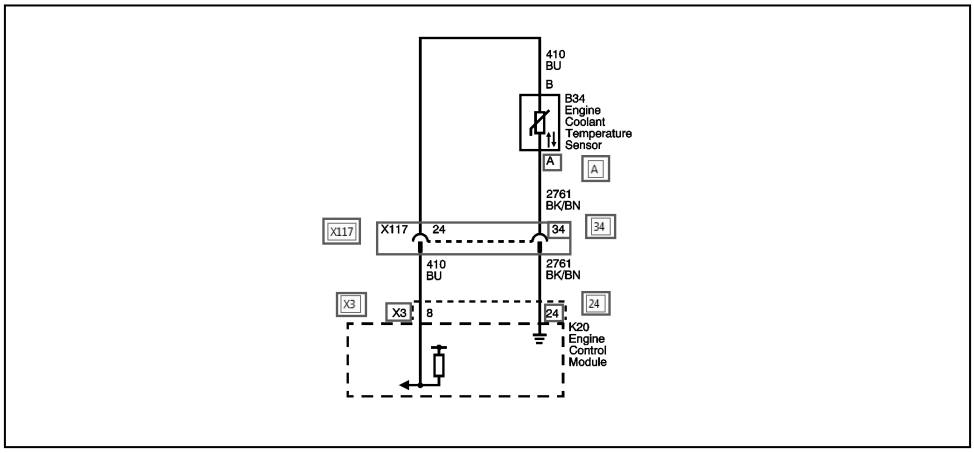

3819889

1. **Mouse-over:** Displays the cavity (pin) identifier (letter/number) for the connection at the component or inline harness connection.
2. **Hotspot Link to Information:** None at this time.

Connector End Views

Connector end view graphics now have mouse-overs to show the wire details of each of the populated cavities. Additionally, the terminal part information has been restructured into an easier to read table.

K9 Body Control Module X1

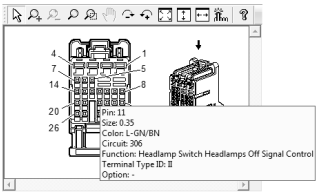

Connector Part Information

- Harness Type: Instrument Panel
- OEM Connector: 13631051
- Service Connector: 13576639
- Description: 26-Way F 64 Series (NA)

Terminal Part Information

Terminal Type ID	Terminated Lead	Diagnostic Test Probe	Terminal Removal Tool	Service Terminal	Tray	Core Crimp	Insulation Crimp
I	13327199	J-35616-35 (VT)	J-38125-12A	SNAC-A061T-M2.8	20	E	A
II	13327195	J-35616-64B (L-BU)	J-38125-12A	SNAC3-A021T-M0.64	20	J	J
III	13579954	J-35616-64B (L-BU)	J-38125-12A	Not Available	Not Available	Not Available	Not Available

K9 Body Control Module X1

Pin	Size	Color	Circuit	Function	Terminal Type ID	Option
1	0.75	BK	1650	Ground	I	-
2	0.5	RD/BK	2540	Battery Positive Voltage	I	-
3	0.5	RD/BK	2140	Battery Positive Voltage	I	-
4	0.5	RD/BN	2240	Battery Positive Voltage	I	-
5	0.35	WH	6816	Indicator Dimming Control	II	-
6	-	-	-	Not Occupied	-	-
7	0.35	BK/YE	5005	Instrument Panel Lamp Dimmer Switch Low Reference	II	-
8	0.13	BN	5720	Ignition Mode Switch Accessory LED Signal	III	-
9-10	-	-	-	Not Occupied	-	-
11	0.35	L-GN/BN	306	Headlamp Switch Headlamps Off Signal Control	II	-
12	-	-	-	Not Occupied	-	-
13	0.35	D-BU/RD	1688	5 Volt Reference	II	-
14	0.35	GY/L-GN	328	Interior Lamp Defeat Switch Signal	II	-
15	-	-	-	Not Occupied	-	-
16	0.35	WH/VT	103	Headlamp Switch On Signal	II	-
17	0.13	GY	7543	Hazard LED Dimming Signal	III	-
18	-	-	-	Not Occupied	-	-
19	0.5	BK/BN	5360	Brake Apply Sensor Low Reference	II	-
20	0.35	D-BU/BK	5719	Ignition Mode Switch Start LED Signal	II	-
21	0.35	GY	728	Security Indicator Control	II	-
22	0.35	L-GN/GY	13	Headlamp Switch Park Lamp Signal	II	-
23	-	-	-	Not Occupied	-	-
24	0.35	WH	2501	High Speed GMLAN Serial Data (-) (1)	II	-
25	0.35	D-BU	2500	High Speed GMLAN Serial Data (+) (1)	II	-
26	0.35	D-BU/WH	3275	Remote Function Actuator Receive Signal	II	-

3819951

1. **Mouse-over:** Displays all of the pinout table information for each column including Pin, Size, Color, Circuit, Function, Terminal Type ID, and Option. Note, that not used/not occupied cavities will not have a mouse-over at all. For not used/not occupied cavities, the connector graphic will appear to have a mouse-over, but no information will be displayed in a pop-up menu.
2. **Hotspot Link to Information:** None at this time. A future update may include links to individual subsystem schematic(s) for each circuit.

Component Locator Views

Component locator views now have links to component connector end views.

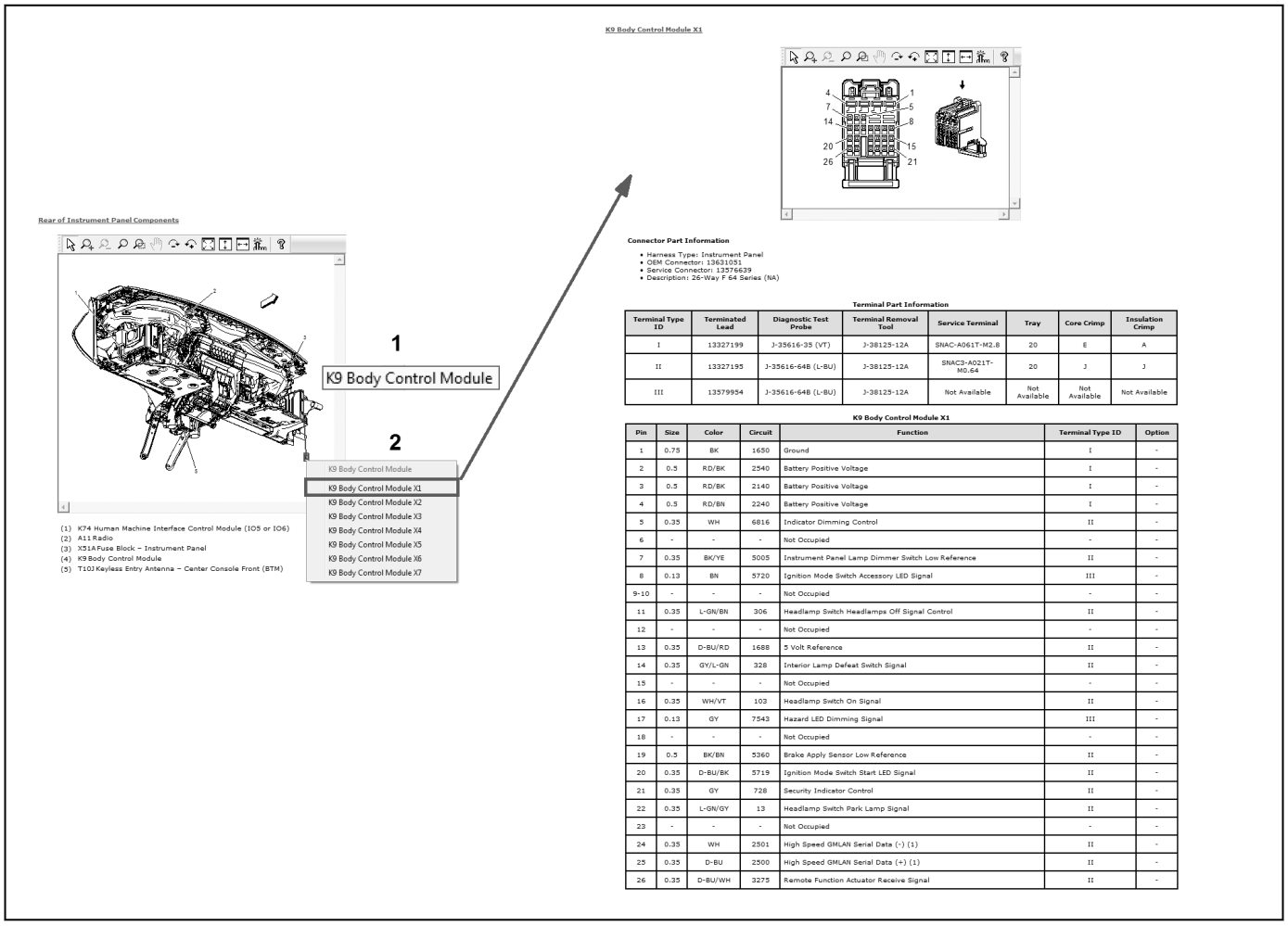

Terminal Type ID	Terminated Lead	Diagnostic Test Probe	Terminal Removal Tool	Service Terminal	Tray	Core Crimp	Insulation Crimp
I	13327199	J-35616-35 (VT)	J-38125-12A	SNAC-A061T-M2.8	20	E	A
II	13327195	J-35616-64B (L-BU)	J-38125-12A	SNAC3-A021T-M0.64	20	J	J
III	13579954	J-35616-64B (L-BU)	J-38125-12A	Not Available	Not Available	Not Available	Not Available

Pin	Size	Color	Circuit	Function	Terminal Type ID	Option
1	0.75	BK	1650	Ground	I	-
2	0.5	RD/BK	2540	Battery Positive Voltage	I	-
3	0.5	RD/BK	2140	Battery Positive Voltage	I	-
4	0.5	RD/BN	2240	Battery Positive Voltage	I	-
5	0.35	WH	6816	Indicator Dimming Control	II	-
6	-	-	-	Not Occupied	-	-
7	0.35	BK/YE	5005	Instrument Panel Lamp Dimmer Switch Low Reference	II	-
8	0.13	BN	5720	Ignition Mode Switch Accessory LED Signal	III	-
9-10	-	-	-	Not Occupied	-	-
11	0.35	L-GN/BN	306	Headlamp Switch Headlamps Off Signal Control	II	-
12	-	-	-	Not Occupied	-	-
13	0.35	D-BU/RD	1688	5 Volt Reference	II	-
14	0.35	GY/L-GN	328	Interior Lamp Defeat Switch Signal	II	-
15	-	-	-	Not Occupied	-	-
16	0.35	WH/VT	103	Headlamp Switch On Signal	II	-
17	0.13	GY	7543	Hazard LED Dimming Signal	III	-
18	-	-	-	Not Occupied	-	-
19	0.5	BK/BN	5360	Brake Apply Sensor Low Reference	II	-
20	0.35	D-BU/BK	5719	Ignition Mode Switch Start LED Signal	II	-
21	0.35	GY	728	Security Indicator Control	II	-
22	0.35	L-GN/GY	13	Headlamp Switch Park Lamp Signal	II	-
23	-	-	-	Not Occupied	-	-
24	0.35	WH	2501	High Speed GMLAN Serial Data (-) (1)	II	-
25	0.35	D-BU	2500	High Speed GMLAN Serial Data (+) (1)	II	-
26	0.35	D-BU/WH	3275	Remote Function Actuator Receive Signal	II	-

3819952

1. **Mouse-over:** Displays the code and name of the component.
2. **Hotspot Link to Information:** Links to individual connector end view(s) within Component Connector End Views.

Harness Routing Views

Harness routing views now have links to splice pack and inline harness connector end views.

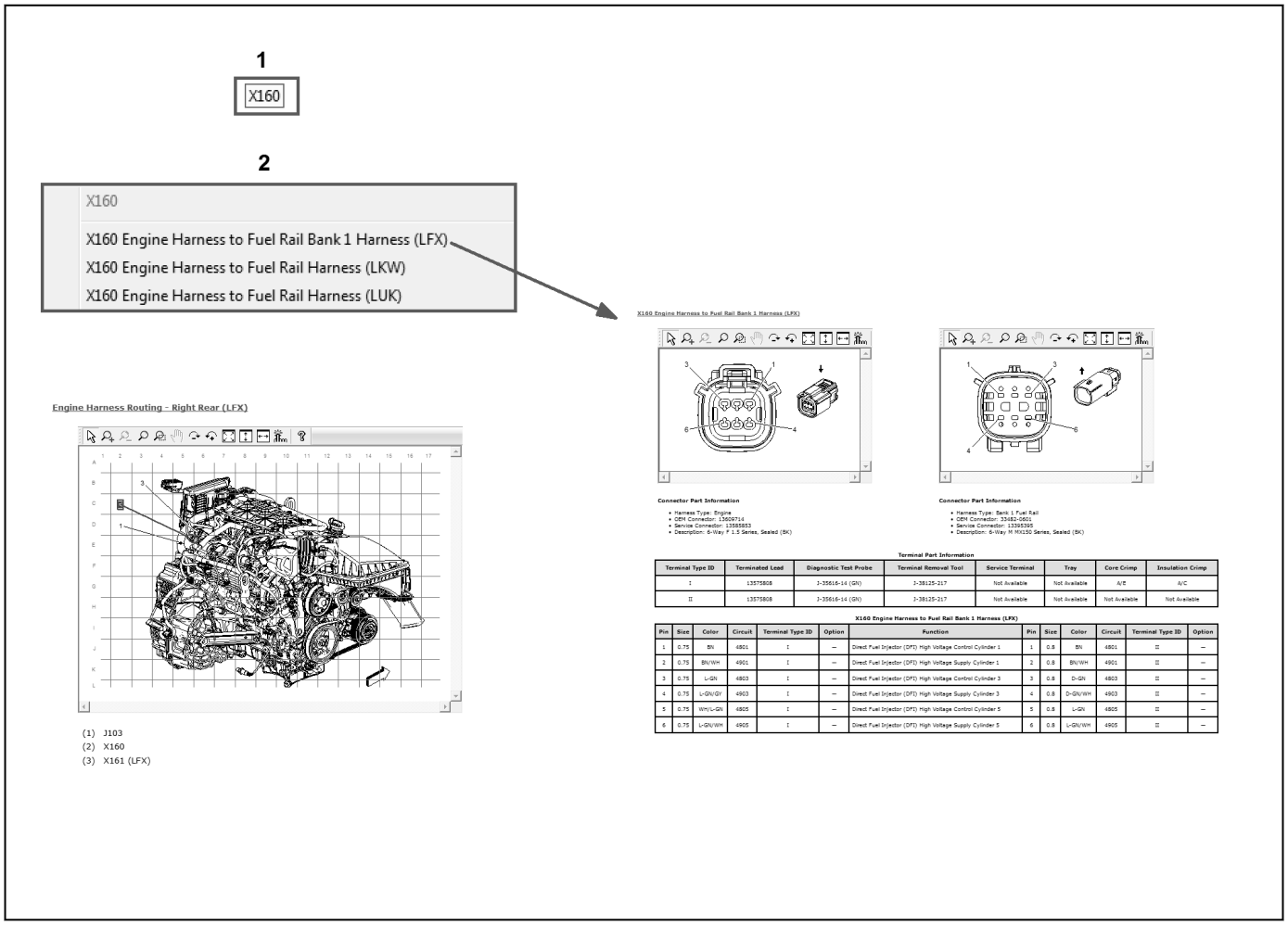

3819958

1. **Mouse-over:** Displays the code of the harness item.
2. **Hotspot Link to Information:** Links to individual splice pack connector end view(s) within Splice Pack Connector End Views for splice packs and to the individual inline harness connector end view(s) within Inline Harness Connector End Views for inline harness connectors.

Electrical Center Identification Views

Electrical center identification views (top and bottom/ front and back) graphics now have mouse-overs to show the function details of each of utilized devices. Note that the label view will not have any mouse-overs or links at all.

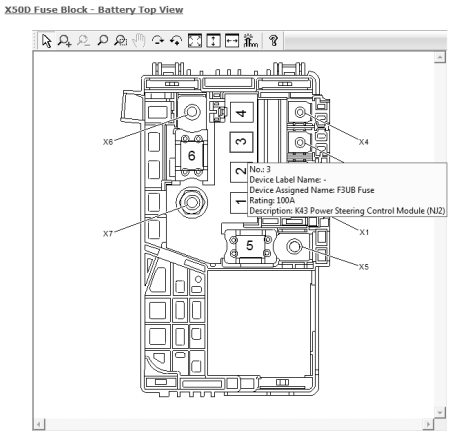

X50D Fuse Block - Battery Usage

No.	Device Label Name	Device Assigned Name	Rating	Description
1	-	F1UB Fuse	60A	X51A Fuse Block - Instrument Panel
2	-	F2UB Fuse	60A	X51A Fuse Block - Instrument Panel
3	-	F3UB Fuse	100A	K43 Power Steering Control Module (NJ2)
4	-	F4UB Fuse	80A	K43 Power Steering Control Module (NJ1)
5	-	F5UB Fuse	250A	X50A Fuse Block - Underhood
6	-	F6UB Fuse	300A	G13 Generator (without HP6), M64 Starter Motor

3820005

1. **Mouse-over:** Displays all of the usage table information for each column including No., Device Label Name, Device Assigned Name, Rating, and Description. Note, that not used/not occupied devices will not have a mouse-over at all. For not used/not occupied devices, the device graphic may appear to have a mouse-over, but no information will be displayed in a pop-up screen.
2. **Hotspot Link to Information:** None at this time.

Master Electrical Component List

While the master electrical component list format has not changed, it will continue to have links to component locator, harness routing, and connector end views for each of the available electrical devices within the vehicle.

Master Electrical Component List

Master Electrical Component List

Code	Name	Option	Location	Locator View	Connector End View
A3L	Sunshade – Left	—	In the passenger compartment, left front, mounted to the headliner at left front	—	—
A3R	Sunshade – Right	—	In the passenger compartment, right front, mounted to the headliner at right front	—	—
A4	Hybrid/EV battery pack	HP6	In the luggage compartment, right behind rear of the seats	Right Side of Luggage Compartment Components	—
A7	Fuel Pump and Level Sensor Assembly	—	In the vehicle underbody, below rear seats, mounted to fuel tank	Fuel Tank Components	A7 Fuel Pump and Level Sensor Assembly
A9A	Outside Rearview Mirror – Driver	—	On outside of driver door, front middle, forward of window opening	Driver Door Components	—
A9B	Outside Rearview Mirror – Passenger	—	On outside of passenger door, front middle, forward of window opening	Passenger Door Components	—
A10	Inside Rearview Mirror	DD8	In the passenger compartment, front center, mounted to top of windshield	Headliner Components	A10 Inside Rearview Mirror (DD8)
A11	Radio	—	In the passenger compartment, front right in instrument panel, near instrument panel courtesy lamp - right	Rear of Instrument Panel Components	• A11 Radio X1 • A11 Radio X2 • A11 Radio X4 • A11 Radio X6 (U2K or U2M) • A11 Radio X7 (IQ3) • A11 Radio X8 (IQ3)
A14D	Seat Lumbar Support Pump – Driver	—	In the passenger compartment, left forward of center, in driver seat back outboard side	Driver Seat Components	A14D Seat Lumbar Support Pump - Driver
A14P	Seat Lumbar Support Pump – Passenger	APH	In the passenger compartment, right forward of center, in the passenger seat back outboard side	Passenger Seat Components	A14P Seat Lumbar Support Pump - Passenger (APH)
A15	Starter/Generator	HP6	In the engine compartment, right front of engine	—	• A15 Starter/Generator X1 (HP6) • A15 Starter/Generator X2 (HP6)
A22	Radio Controls	—	In the passenger compartment, center front, part of the info display module, in instrument panel, above HVAC controls	Front of Instrument Panel Components	—
A23D	Door Latch Assembly – Driver	—	Inside the driver door, at rear below middle	Driver Door Components	A23D Door Latch Assembly - Driver
A23LR	Door Latch Assembly – Left Rear	—	Inside the left rear door, at rear below middle	Left Rear Door Components	A23LR Door Latch Assembly - Left Rear
A23P	Door Latch Assembly – Passenger	—	Inside the passenger door, at rear below middle	Passenger Door Components	A23P Door Latch Assembly - Passenger
A23RR	Door Latch Assembly – Right Rear	—	Inside the right rear door, at rear below middle	Right Rear Door Components	A23RR Door Latch Assembly - Right Rear
A24D	Door Handle Assembly – Driver Exterior	ATH	On the outside of driver door, rear middle	Driver Door Components	A24D Door Handle Assembly - Driver Exterior (ATH)
A24LR	Door Handle Assembly - Left Rear Exterior	ATH	On the outside of left rear door, rear middle	Left Rear Door Components	A24LR Door Handle Assembly - Left Rear Exterior (ATH)
A24P	Door Handle Assembly – Passenger Exterior	ATH	On the outside of passenger door, rear middle	Passenger Door Components	A24P Door Handle Assembly - Passenger Exterior (ATH)
A24RR	Door Handle Assembly - Right Rear Exterior	ATH	On the outside of right rear door, rear middle	Right Rear Door Components	A24RR Door Handle Assembly - Right Rear Exterior (ATH)
A26	HVAC Controls	—	In the passenger compartment, front center, on instrument panel, below radio controls	Front of Instrument Panel Components	A26 HVAC Controls
A33	Media Disc Player	—	In the passenger compartment, front center, on instrument panel, below and forward of radio controls	—	A33 Media Disc Player
B1	A/C Refrigerant Pressure Sensor	—	At the front of vehicle, right of center, front of A/C condenser, mounted to right side near bottom	Radiator Assembly Components	• B1 A/C Refrigerant Pressure Sensor (LFX or LUK) • B1 A/C Refrigerant Pressure Sensor (LKW)
B5LF	Wheel Speed Sensor – Left Front	—	At the left front suspension, mounted to knuckle, rearward of axle	Fuel Composition Sensor, Wheel Speed Sensors and Parking Brake	B5LF Wheel Speed Sensor - Left Front
B5LR	Wheel Speed Sensor – Left Rear	—	At the left rear suspension, mounted to knuckle, forward side	Fuel Composition Sensor, Wheel Speed Sensors and Parking Brake	B5LR Wheel Speed Sensor - Left Rear
B5RF	Wheel Speed Sensor – Right Front	—	At the right front suspension, mounted to knuckle, rearward of axle	Fuel Composition Sensor, Wheel Speed Sensors and Parking Brake	B5RF Wheel Speed Sensor - Right Front
B5RR	Wheel Speed Sensor – Right Rear	—	At the right rear suspension, mounted to knuckle, forward side	Fuel Composition Sensor, Wheel Speed Sensors and Parking Brake	B5RR Wheel Speed Sensor - Right Rear
B7D	Air Temperature Sensor – Duct Left Lower	CJ2	In the passenger compartment, within the instrument panel, center front, left side middle of HVAC assembly	HVAC Assembly Components (CJ2)	B7D Air Temperature Sensor - Duct Left Lower (CJ2)
B7E	Air Temperature Sensor – Duct Right Lower	CJ2	In the passenger compartment, within the instrument panel, center front, right side middle of HVAC assembly	HVAC Assembly Components (CJ2)	B7E Air Temperature Sensor - Duct Right Lower (CJ2)
B7H	Air Temperature Sensor – Duct Left Upper	CJ2	In the passenger compartment, within the instrument panel, center front, left side top of HVAC assembly	HVAC Assembly Components (CJ2)	B7H Air Temperature Sensor - Duct Left Upper (CJ2)
B7J	Air Temperature Sensor – Duct Right Upper	CJ2	In the passenger compartment, within the instrument panel, center front, right side top of HVAC assembly	HVAC Assembly Components (CJ2)	B7J Air Temperature Sensor - Duct Right Upper (CJ2)
B9	Ambient Air Temperature Sensor	—	At the front of vehicle, left of center, mounted to rear of lower grille	Front of Vehicle Components	B9 Ambient Air Temperature Sensor
B10B	Ambient Light/Sunload Sensor	—	In the passenger compartment, center front, in instrument panel, rear of windshield defroster outlet	Front of Instrument Panel Components	B10B Ambient Light/Sunload Sensor
B12A	Transmission Fluid Pressure Switch	—	In the engine compartment, part of the control solenoid valve assembly, mounted to the valve body inside the transmission	—	—
B13	Transmission Fluid Temperature Sensor	—	In the engine compartment, part of the control solenoid valve assembly, mounted to the valve body inside the transmission	—	—

3820020

1. **Mouse-over:** None at this time.
2. **Hotspot Link to Information:**
   - ⇒ A future update may include links to individual subsystem schematic(s) for each component/ harness item.
   - ⇒ **Components**
     - − Links to individual locator view within one of the eight component view categories and will show where the component is located in the vehicle.
     - − Links to individual connector end view(s) within Component Connector End Views.
   - ⇒ **Electrical Centers (Fuse Blocks)**
     - − Links to individual locator view within one of the eight component view categories and will show where the component is located in the vehicle.
     - − Links to individual connector end view(s) within Electrical Center Identification Views.
   - ⇒ **Inline Harness Connectors**
     - − Links to individual harness routing view(s) within Harness Routing Views and will show where the harness item is located on the vehicle harness.
     - − Links to individual connector end view(s) within Inline Harness Connector End Views.
   - ⇒ **Grounds**

- Links to individual locator view within Ground Views component view and will show where the ground is located in the vehicle.

⇒ **Splices**

- Links to individual harness routing view(s) within Harness Routing Views and will show where the harness item is located on the vehicle harness.

⇒ **Splice Packs**

- Links to individual harness routing view(s) within Harness Routing Views and will show where the harness item is located on the vehicle harness.
- Links to individual connector end view(s) within Splice Pack Connector End Views.

Master Electrical Schematic Icons

While the master electrical schematic icons list format has not changed, it will continue to include icons used in the vehicle schematics along with the message for the icon.

Master Electrical Schematic Icons

Master Electrical Schematic Icons

Icon	Icon Definition
	Warning: When performing service on or near the SIR components or the SIR wiring, the SIR system must be disabled. Refer to SIR Disabling and Enabling . Failure to observe the correct procedure could cause deployment of the SIR components, personal injury, or unnecessary SIR system repairs.
	Warning: When performing service on or near the pedestrian impact detection system (PIDS) components or the PIDS wiring, the PIDS must be disabled. Failure to observe the correct procedure could cause deployment of the PIDS components. Serious injury can occur. Failure to observe the correct procedure could also result in unnecessary PIDS repairs
	Warning: The high intensity discharge system produces high voltage and current. To reduce the risk of severe shocks and burns: • Never open the high intensity discharge system ballast or the arc tube assembly starter. • Never probe between the high intensity discharge system ballast output connector and the arc tube assembly. **Warning:** To help avoid personal injury, always treat the accessory power receptacle, accessory DC/AC power inverter module, AC circuit wires, and connectors as if AC high-voltage is present. **Danger:** Always perform the High Voltage Disabling procedure prior to servicing any High Voltage component or connection. Personal Protection Equipment (PPE) and proper procedures must be followed. The High Voltage Disabling procedure will perform the following tasks: • Identify how to disable high voltage. • Identify how to test for the presence of high voltage. • Identify condition under which high voltage is always present and personal protection equipment (PPE) and proper procedures must be followed. Failure to follow the procedures exactly as written may result in serious injury or death.
	Caution: The connector at the component cannot be disconnected or removed without damage to the component. If the connector is removed, the entire component with jumper harness must be replaced.
	Note: Twisted wires provide an effective shield that helps protect sensitive electronic components from electrical interference. In order to prevent electrical interference from degrading the performance of the connected components, you must maintain the proper specification when making any repairs to the twisted wires shown : • The wires must be twisted a minimum of 9 turns per 31 cm (12 in) as measured anywhere along the length of the wires. • The outside diameter of the twisted wires must not exceed 6.0 mm (0.25 in).

3820510

1. **Mouse-over:** None at this time.
2. **Hotspot Link to Information:** None at this time.

Schematic RPO Code List

The schematic RPO code list only includes RPOs shown in schematics and also includes the country groupings for the options. This list is in addition to the vehicle RPO Code List that is included in General Information.

Schematics RPO Code List

Schematics RPO Code List

RPO	Description	Country Group
A45	MEMORY-SEAT ADJUSTER, MIRROR, POWER, DRIVER, PERSONALIZATION	U.S.A., PR and USVI (MAH)
A6C	ADJUSTER PASS ST-MANUAL, 4 WAY, PWR VERT	U.S.A., PR and USVI (MAH),Canada (MBC)
AED	WINDOW REG PASS DR-POWER OPERATED, EXPRESS DOWN	China
AEF	WINDOW REG PASS DR-POWER OPERATED, EXPRESS UP/DOWN	U.S.A., PR and USVI (MAH),Canada (MBC),Mexico (MCX), China
AEQ	WINDOW-POWER OPERATED, RR DRS, EXPRESS DOWN	U.S.A., PR and USVI (MAH),Canada (MBC),Mexico (MCX)
AER	WINDOW-POWER OPERATED, RR DRS, EXPRESS UP/DOWN	China
AF6	CONTROL-SEAT, MASSAGE, DRIVER	China
AG1	ADJUSTER FRT ST-POWER, MULTI-DIRECTIONAL, DRIVER	U.S.A., PR and USVI (MAH),Canada (MBC),Mexico (MCX)
AG2	ADJUSTER PASS ST-POWER, MULTI-DIRECTIONAL	U.S.A., PR and USVI (MAH),Canada (MBC),Mexico (MCX)
APG	CONTROL-SEAT, POWER LUMBAR, LH	U.S.A., PR and USVI (MAH),Canada (MBC),Mexico (MCX)
APH	CONTROL-SEAT, POWER LUMBAR, RH	U.S.A., PR and USVI (MAH),Canada (MBC),Mexico (MCX)
ASV	EQUIPMENT-SENSOR AIR MOISTURE and W/S TEMP	U.S.A., PR and USVI (MAH),Canada (MBC),Mexico (MCX)
ATH	LOCK CONTROL, ENTRY-REMOTE ENTRY, EXTENDED RANGE, PASSIVE ENTRY, ALL DOORS	U.S.A., PR and USVI (MAH),Canada (MBC),Mexico (MCX)
ATS	Lock Control, Entry – Remote Entry, Standard Range, Passive Entry	China
AW7	RESTRAINT SYSTEM-SEAT, INFLATABLE, DRIVER AND PASS FRT, FRT SEAT SIDE AND RR SEAT SIDE, ROOF SIDE	U.S.A., PR and USVI (MAH),Canada (MBC)
BTM	SWITCH-ENGINE START, KEYLESS	U.S.A., PR and USVI (MAH),Canada (MBC),Mexico (MCX)
C67	HVAC SYSTEM-AIR CONDITIONER FRT, ELECTRONIC CONTROLS	U.S.A., PR and USVI (MAH),Canada (MBC),Mexico (MCX)
CE1	WIPER SYSTEM-WINDSHIELD, PULSE, MOISTURE SENSITIVE	China
CE4	WASHER-HEADLAMP, HIGH PRESSURE	China
CF5	ROOF-SUN, GLASS, SLIDING, ELEC	U.S.A., PR and USVI (MAH),Canada (MBC),Mexico (MCX)
CJ2	HVAC SYSTEM-AIR CONDITIONER FRT, AUTO TEMP CONT, AUX TEMP CONT	U.S.A., PR and USVI (MAH),Canada (MBC),Mexico (MCX)
CZ2	COUNTRY-CHINA	China
DD8	MIRROR I/S R/V-LT SENSITIVE	U.S.A., PR and USVI (MAH),Canada (MBC),Mexico (MCX)
EF7	COUNTRY-UNITED STATES OF AMERICA (USA)	U.S.A., PR and USVI (MAH)
F45	CHASSIS-CONTINUOUSLY VARIABLE REAL TIME DAMPING	U.S.A., PR and USVI (MAH),Canada (MBC)
FHS	VEHICLE FUEL-GASOLINE E85	U.S.A., PR and USVI (MAH),Canada (MBC),Mexico (MCX)
HP6	HYBRID PROPULSION-ELECTRIC, PARALLEL, 14KW CONTINUOUS POWER	U.S.A., PR and USVI (MAH),Canada (MBC)
J71	BRAKE PARKING-POWER OPERATED	U.S.A., PR and USVI (MAH),Canada (MBC),Mexico (MCX)
KA1	HEATER SEAT FRT-DRVR and PASS	U.S.A., PR and USVI (MAH),Canada (MBC),Mexico (MCX)
KD4	RECEPTACLE-ELECTRICAL, FRT CONSOLE	U.S.A., PR and USVI (MAH),Canada (MBC),Mexico (MCX)
KI6	RECEPTACLE-ELECTRICAL, FRT CONSOLE RR 110 VOLT	U.S.A., PR and USVI (MAH),Canada (MBC),Mexico (MCX)
KRJ	CONTROL-CONSOLE, INFOTAINMENT, REDUNDANT CONTROLS, JOYSTICK	U.S.A., PR and USVI (MAH),Canada (MBC),Mexico (MCX)
KTA	AUDIO INTERFACE-	China
KU1	VENTILATED SEAT DRVR-FRONT	U.S.A., PR and USVI (MAH)
KU3	VENTILATED SEAT PASS-FRONT	U.S.A., PR and USVI (MAH)
LAF	ENGINE-GAS, 4 CYL, 2.4L, SIDI,DOHC, VVT, ALUM, GM - DO NOT USE AFTER 2013, USE LEA	China
LDK	ENGINE-GAS, 4 CYL, 2.0L, DI, DOHC, TURBO-HO, VARIABLE CAMSHAFT PHASING - DO NOT USE AFTER 2013, USE LHU	China
LHU	ENGINE-GAS, 2.0L, SIDI, L4, DOHC TURBO, E85 MAX, ALUM	U.S.A., PR and USVI (MAH),Canada (MBC),Mexico (MCX)
LLU	ENGINE-GAS, 4 CYL, 1.6L, MFI, DOHC, TURBO, PT-JV, 132KW	China
LTD	ENGINE-GAS, 4 CYL, 2.0L, MFI, ALUM, DOHC, SGM	China
LUK	ENGINE-GAS, 4 CYL, 2.4L, DI, ALUM, DOHC, BAS, ECOTEC	U.S.A., PR and USVI (MAH),Canada (MBC)
MDK	TRANSMISSION-AUTO 6 SPD, AISIN-WARNER, A6-AF40, ELECTRONIC, GEN2	U.S.A., PR and USVI (MAH),Canada (MBC)
MH8	TRANSMISSION-AUTO 6 SPD, HMD, X23F	U.S.A., PR and USVI (MAH),Canada (MBC)
MHH	TRANSMISSION-AUTO 6 SPD, HMD, GM, BAS+, 6T40, HYBRID, FWD	U.S.A., PR and USVI (MAH),Canada (MBC)
MHK	TRANSMISSION-AUTO 6 SPD, 6T50	U.S.A., PR and USVI (MAH),Canada (MBC),Mexico (MCX)
MR6	TRANSMISSION-MAN 6 SPD, OPEL, 83MM, 3.92 1ST, 0.62 6TH (F40 WR), REDUCE HELIX	U.S.A., PR and USVI (MAH),Canada (MBC)
NJ1	STEERING-POWER, NON-VARIABLE RATIO, ELECTRIC	U.S.A., PR and USVI (MAH),Canada (MBC)
NU6	EMISSION SYSTEM-CALIFORNIA, PZEV	U.S.A., PR and USVI (MAH)
NV7	STEERING-POWER, VARIABLE EFFORT	U.S.A., PR and USVI (MAH),Canada (MBC),Mexico (MCX)
NXC	STEERING-POWER, VARIABLE EFFORT, REDUCED RACK TRAVEL	U.S.A., PR and USVI (MAH),Canada (MBC)
T4A	HEADLAMPS-HALOGEN	U.S.A., PR and USVI (MAH),Canada (MBC)

3820023

1. **Mouse-over:** None at this time.
2. **Hotspot Link to Information:** None at this time.

Electrical Schematic Symbols

Voltage Indicators

Symbol	Description
B+ 1988677	Battery Voltage
IGN 0 1988679	Ignition Switch– Off Position
IGN I 1988682	Ignition Switch– Accessory Position
IGN II 1988686	Ignition Switch– Run Position
IGN III 1988691	Ignition Switch– Start Position

General Icons

Symbol	Description
LOC 1990537	Master Component List Icon This icon is used on the schematic to link to the Master Electrical Component List.
DESC 1990538	Description and Operation Icon This icon is used on the schematic to link to the Description and Operation of that particular system.

Symbol	Description
1988674	Computer Programming Icon This icon is used on the schematic to link to Control Module References, which identifies which components need programming upon replacement.
1990541	Next Schematic Page Icon This icon is used on the schematic to navigate to the next schematic in the subsystem.
1990542	Previous Schematic Page Icon This icon is used on the schematic to navigate to the previous schematic in the subsystem.
1988667	Supplemental Inflatable Restraint (SIR) or Supplemental Restraint System (SRS) Icon This icon is used to alert the technician that the system contains SIR/SRS components that require certain precautions before servicing.

Symbol	Description
1988670	Information Icon This icon is used to alert the technician that there is additional information that will aid in servicing a system.
1988672	Danger Icon This icon is intended to alert the technician that a component within the system contains labeling with the same icon. This icon is used when a source component has potential for 60 volts DC or greater or has potential for 42 volts AC or greater.
1988673	High Voltage Icon This icon is intended to alert the technician that a component within the system contains labeling with the same icon. This icon is used when a component/circuit has potential for 60 volts DC or greater or has potential for 42 volts AC or greater.

Symbol	Description
1990543	Caution Icon This icon is used to advise the technician to use caution when servicing this component. This icon may be used when a component/circuit has a voltage range potential between 30-60 volts DC or 15-42 volts AC.
1988675	Functional Serial Data Communication This icon is used to show the technician that the serial data circuit detail is shown incomplete. It also provides an active link to the Data Communication Schematics were the circuit is shown complete.

Switch Position Icons

Symbol	Description
1989016	Generic Up Arrows
1990554	Generic Down Arrows

Symbol	Description
1990555	Generic Left Arrows
1990556	Generic Right Arrows
1990557	Generic Express Down Arrows
1990558	On/Off Icon

Symbol	Description
1990559	Generic Lock Icon
1990560	Generic Unlock Icon
1989018	Generic Window Switch Positions– 4 Door
1989020	Generic Window Switch Positions– 2 Door

Module Circuit Function Icons

Symbol	Description
1988774	I/O Pull-Down Resistors (−)
1990567	I/O Pull-Up Resistors (+)
1988775	I/O High-Side Drive Switch (+)
1990568	I/O Low-Side Drive Switch (−)

Symbol	Description
1990570	I/O Bidirectional Switch (+/−)
6535609	I/O Bidirectional Switch (+/−) Neutral State
1990571	Pulse-Width Modulation Symbol
B+ 1990573	Battery Voltage

Symbol	Description
IGN 1990574	Ignition Voltage
5V 1990576	Voltage Reference
5V AC 1990577	A/C Voltage
1988986	Low Reference

Symbol	Description
1990578	Ground
1990579	Serial Data
1988973	Antenna Signal– In
1988974	Antenna Signal– Out

Symbol	Description
2161152	Brake Apply
5371975	Bulb Out
6659366	Approach Lighting Animation
6659367	Sequential Turn Signal Animation

Harness Components

Symbol	Description
1988731	Fuse
1988733	Fuse Supplied by a Relay
1988740	Circuit Breaker
1988745	Fusible Link

Symbol	Description
1988987	Ground
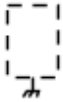 1988746	Case Ground
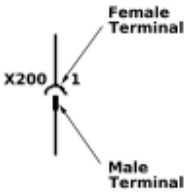 1988977	Inline Harness Connector
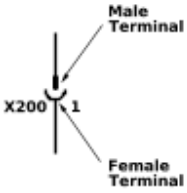 1990974	Inline Harness Connector

Symbol	Description
1990975	Pigtail Connection
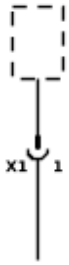 1990976	Pigtail Connection
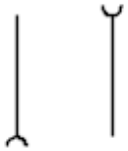 1990977	Provisional or Diagnostic Connector
1990978	Blunt Cut Wire

Symbol	Description
1988980	Incomplete Physical Splice
1988981	Complete Physical Splice– 2 Wires
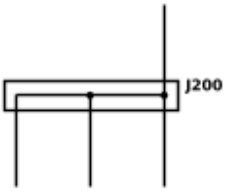 1988982	Complete Physical Splice– 3 or more wires
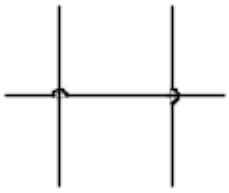 1990979	Wire Crosses

Symbol	Description
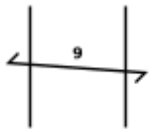 1988988	Twisted Wires
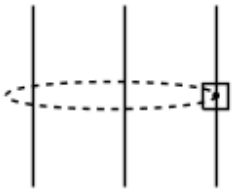 1988990	Shield
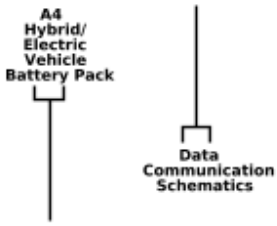 1990980	Circuit References
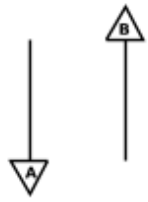 1990981	Circuit Continuation Arrowheads

Symbol	Description
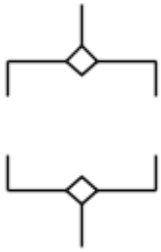 1988983	Option Breakpoint
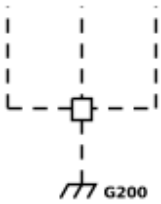 1988984	Ground Circuit Connection
1988985	Connector Shorting Clip

Component Parts

Symbol	Description
1988694	Partial Component When a component is represented in a dashed box, the component or its wiring is not shown in its entirety.
1988698	Entire Component When a component is represented in a solid box the component or its wiring is shown in its entirety.
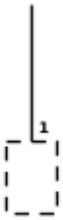 1988712	Connector Directly Attached to Component
1988715	Pigtail Connector

Switches and Relays

Symbol	Description
1991015	Accessory Power Outlet
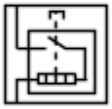 1991016	Cigar Lighter
1988991	Switch– 2 Position Normally Open
1988992	Switch– 2 Position Normally Closed

Symbol	Description
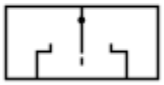 1988993	Switch– Rocker
1991017	Switch– Contact Plate (1 Wire)
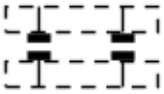 1988994	Switch– Contact Plate (2 Wire)
1991018	Switch– 3 Position
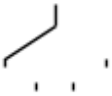 1988995	Switch– 4 Position
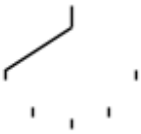 1991019	Switch– 5 Position
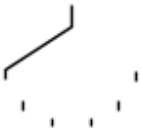 1991021	Switch– 6 Position
1988997	Switch Actuator– Push (Momentary)

Symbol	Description
1988998	Switch Actuator– Push (Latching)
1988999	Switch Actuator– Pull (Momentary)
1989000	Switch Actuator– Pull (Latching)
1989001	Switch Actuator– Rotate (Momentary)

Symbol	Description
1989002	Switch Actuator– Rotate (Latching)
1989003	Switch Actuator– Slide (Momentary)
1989004	Switch Actuator– Slide (Latching)
1989007	Switch Actuator– Pressure (Momentary)

Symbol	Description
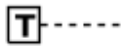 1989010	Switch Actuator– Temperature (Momentary)
1989013	Switch Actuator– Volume (Latching)
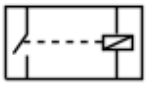 1988975	4-Pin Single Pole/Throw Relay– Normally Open
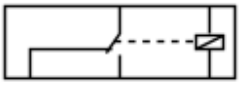 1990539	5-Pin Relay– Normally Closed

Devices and Sensors

Symbol	Description
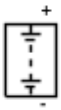 1988751	Battery
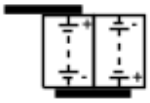 1988753	Battery Assembly– Hybrid
1988717	Single Filament Light Bulb
1988719	Double Filament Light Bulb

Symbol	Description
1988722	Light Emitting Diode (LED)
1988725	Photo Sensor
1990988	Gauge
1988776	Diode

Symbol	Description
1988748	Capacitor
1988755	Resistor
1988759	Variable Resistor
1990991	Variable Resistor– NTC

Symbol	Description
1990992	Breakable Wire
1988778	Heating Element
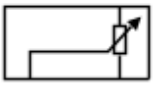 1988771	Position Sensor
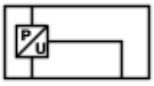 1988773	Pressure Sensor

Symbol	Description
1990993	Knock Sensor
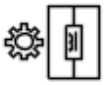 1990994	Inductive Type Sensor– 2-Wire
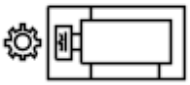 1990996	Inductive Type Sensor– 3-Wire
1990998	Hall Effect Sensor– 2-Wire

Symbol	Description
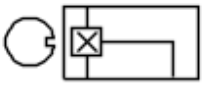 1990999	Hall Effect Sensor– 3-Wire
1991000	Oxygen Sensor– 2-Wire
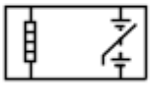 1991001	Heated Oxygen Sensor– 4-Wire
1988970	Solenoid– Actuator

Symbol	Description
1988971	Solenoid– Valve
1988972	Clutch
1988779	Motor
1991003	Motor with PTC

Symbol	Description
1988729	Antenna
1991005	Speaker
1991006	Horn
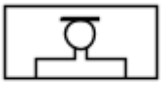 1991007	Microphone

Symbol	Description
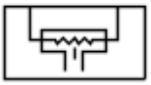 1991008	Airbag
1991009	SIR Coil
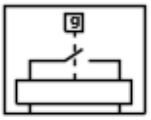 1991010	SIR Impact Sensor

Vehicle Zoning Strategy

All grounds, in-line connectors, and splices have identifying numbers that correspond to where they are located in the vehicle. The following table explains the numbering system.

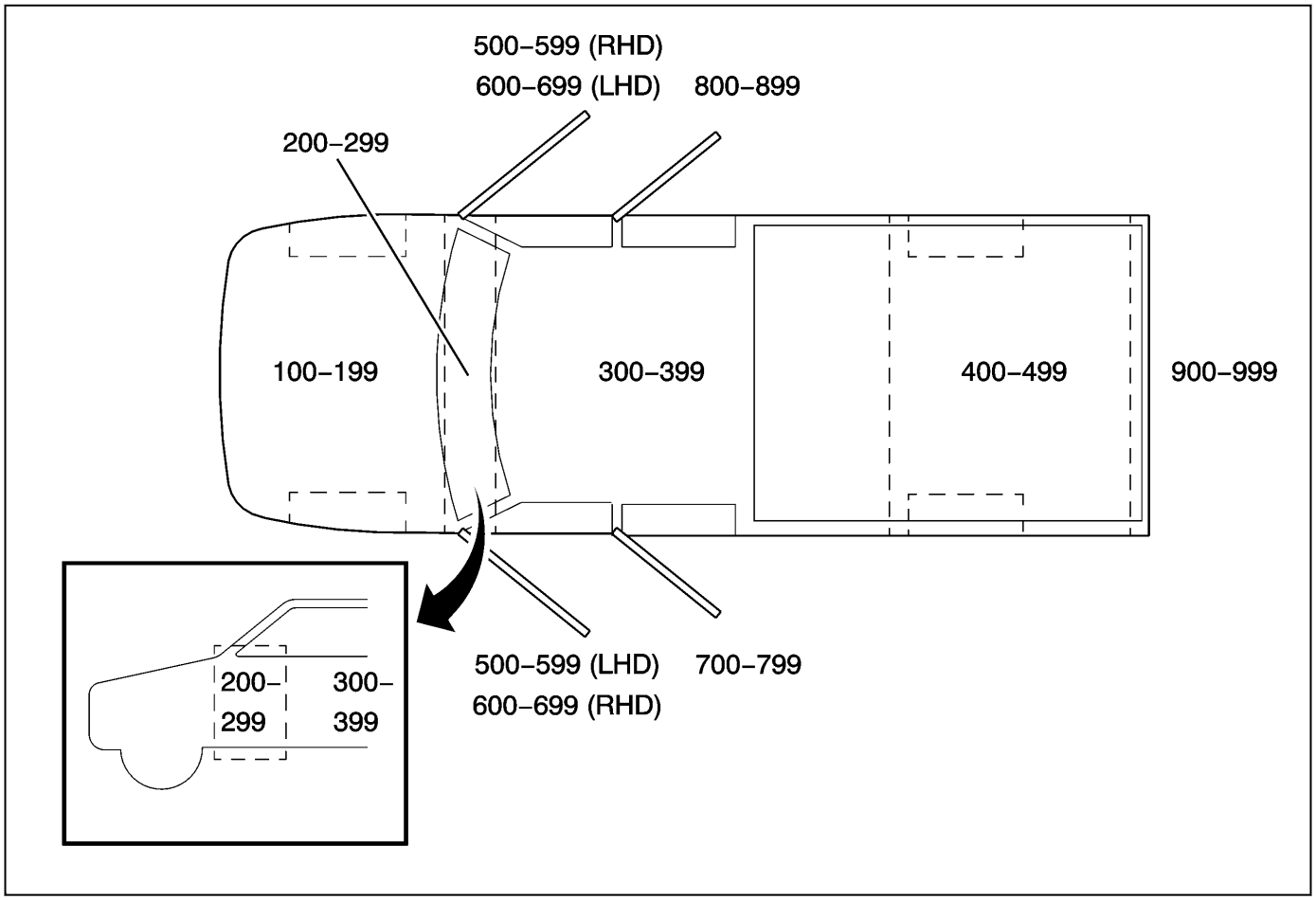

160995

Vehicle Zoning Strategy

Callout Numbers	Zone Description
100-199	Engine compartment (all forward of the instrument panel)
200-299	Within the instrument panel area (between the bulkhead and the front plane of the instrument panel)
300-399	Passenger compartment (from the instrument panel to the rear of the cab)
400-499	Truck bed/chassis (from the rear of the cab to the rear of the vehicle)

Callout Numbers	Zone Description
500-599	Inline harness connectors to or within the driver door
600-699	Inline harness connectors to or within the front passenger door
700-799	Inline harness connectors to or within the left rear door
800-899	Inline harness connectors to or within the right rear door
900-999	Inline harness connectors to or within the endgate

Schematics RPO Code List

Schematics RPO Code List

RPO	Option Name
8S3	ALARM B/U-ELECTRICAL, 97 DECIBELS (SEO)
9L7	EQUIPMENT-ACSRY WRG JUNC BLK
A31	WINDOW-POWER OPERATED, ALL DOORS (DO NOT USE ON NEW/MAJOR PROGRAMS)

RPO	Option Name
AG1	ADJUSTER FRT ST-POWER, MULTI-DIRECTIONAL, DRIVER (DO NOT USE ON NEW PROGRAMS AFTER MY18)
AG2	ADJUSTER PASS ST-POWER, MULTI-DIRECTIONAL (DO NOT USE ON NEW PROGRAMS AFTER MY18)
AK5	RESTRAINT SYSTEM-SEAT, INFLATABLE, DRIVER and PASS FRT
ASF	RESTRAINT-ROOF SIDE (LH and RH), SEAT SIDE (FRONT 1ST ROW), INFLATABLE (DO NOT USE. USE RES FAMILY.)
ATG	LOCK CONTROL, ENTRY-REMOTE ENTRY, STANDARD RANGE
AU3	LOCK CONTROL-SIDE DR, ELEC
BTV	REMOTE START-VEHICLE
C36	HEATER-AUXILIARY
C49	DEFOGGER-RR WINDOW, ELECTRIC
C69	HVAC SYSTEM RR-AIR CONDITIONER
C99	SWITCH-INFL RST I/P MDL MAN SUPPRESSION (DNU NEXT NEW MAJOR USE AZM OR AZT)
CARGO	CARGO CHASSIS
CUTAWAY	CUTAWAY CHASSIS
DE5	MIRROR O/S-LH and RH, REMOTE CONTROL, ELECTRIC, HEATED, FOLDING, COLOR.
DH6	MIRROR I/S FRT VAN-LH and RH, SUNSHADE, ILLUM (DO NOT USE NEXT NEW MAJOR)
E24	DOOR SIDE-REAR, HINGED
ENC	HVAC PROVISIONS-AUXILLIARY HEATER PLUMBING and WIRING
G7K	EQUIPMENT-ANTENNA, CABLE AND GROUNDPLATE
K34	CRUISE CONTROL-AUTOMATIC, ELECTRONIC
KI4	RECEPTACLE I/P-ELECTRICAL, 120 VOLT, TYPE B
L8T	ENGINE-GAS, 8 CYL, 6.6L, SIDI, VVT, CAST IRON
LV1	ENGINE-GAS, 6 CYL, 4.3L, GEN 5, SIDI, V6, VVT, OHV, ALUM
NE7	FUEL TANK-216L, 57 GAL
PASSENGER	PASSENGER CHASSIS
REARHVAC-CONTROLS	REAR HVAC CONTROLS
TP3	BATTERY-770 CCA and 770 CCA (DUAL)770 CCA and 770 CCA (DUAL)
TR9	LAMP GROUP-
U80	DISPLAY-COMPASS
UD7	PARK ASSIST-REAR
UE1	COMMUNICATION SYSTEM-VEHICLE, ONSTAR
UEU	SENSOR INDICATOR-FORWARD COLLISION ALERT
UFA	DISPLAY-OUTSIDE TEMPERATURE
UFL	LANE ACTIVE SAFETY-DEPARTURE WARNING
UFT	SIDE ACTIVE SAFETY-OBSTACLE DETECTION (DNU NEXT NEW MAJOR)
UJ1	INDICATOR-SYSTEM, BRAKE WARNING
UJM	TIRE PRESS INDICATOR-MANUAL LEARN
UVC	VISION-REAR VIEW, MONO, ANALOG
UY7	WIRING HARNESS-TRUCK TRAILER, HD
V4D	CALIBRATION-SEPARATED STOP/TURN SIGNAL CIRCUITS
YA2	DOOR SIDE-REAR, SLIDING DOOR, MANUAL

RPO	Option Name
YF1	SALES PACKAGE-CUTAWAY UPFITTER
YF2	SALES PACKAGE-AMBULANCE UPFITTER

Master Electrical Schematic Icons

Master Electrical Schematic Icons

Icon	Icon Definition
19386	***Warning: When performing service on or near the SIR components or the SIR wiring, the SIR system must be disabled. Refer to SIR Disabling and Enabling . Failure to observe the correct procedure could cause deployment of the SIR components, personal injury, or unnecessary SIR system repairs.***
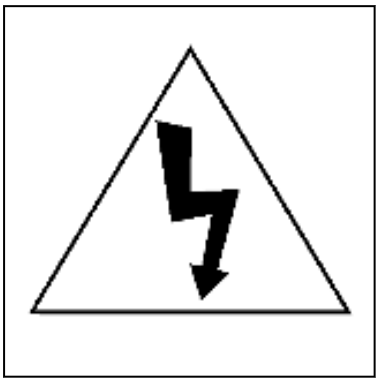 296943	***Warning: To help avoid personal injury, always treat the accessory power receptacle, accessory DC/AC power inverter module, AC circuit wires, and connectors as if AC high-voltage is present.***

Icon	Icon Definition
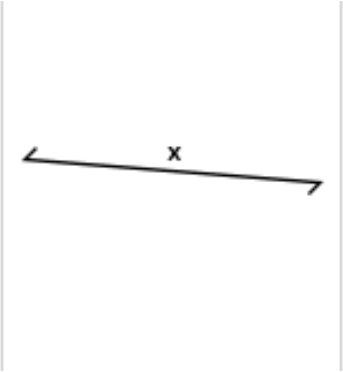 902886	**Note:** Twisted wires provide an effective shield that helps protect sensitive electronic components from electrical interference.In order to prevent electrical interference from degrading the performance of the connected components, you must maintain the proper specification when making any repairs to the twisted wires shown : • The wires must be twisted a minimum of 9 turns per 31 cm (12 in) as measured anywhere along the length of the wires. • The outside diameter of the twisted wires must not exceed 6.0 mm (0.25 in).
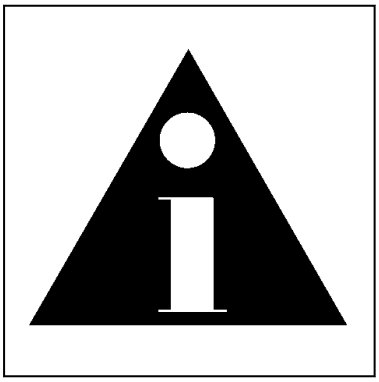 1822496	**Note:** Pinout indexing on ground splice pack connectors JX347 and JX348 may vary.

Power Distribution Schematics (Fusible Links and B+ Bus - Underhood Fuse Block - One Battery - 1 of 3)

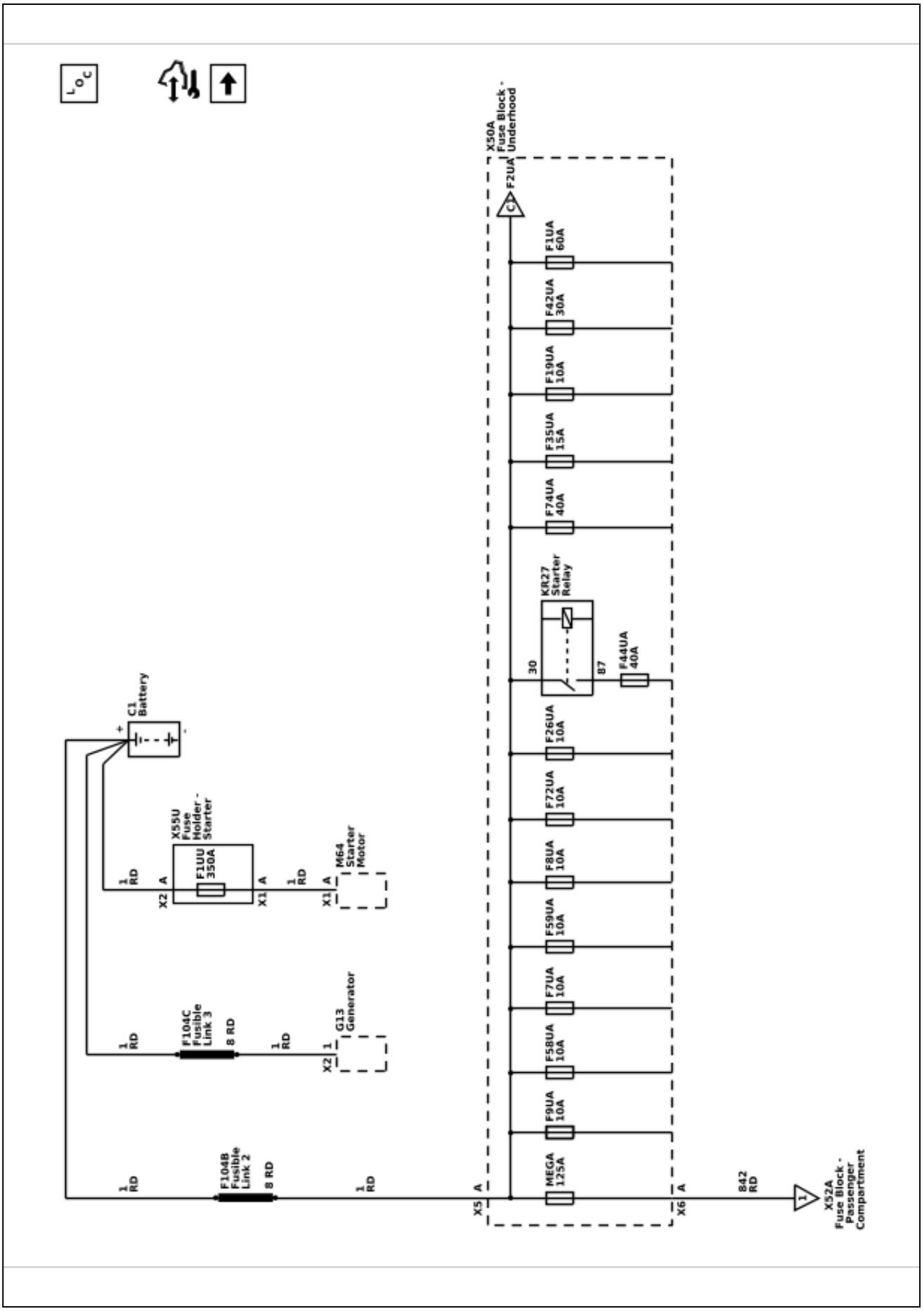

7085750

7085751

Power Distribution Schematics (Fusible Links and B+ Bus - Underhood Fuse Block - Two Batteries - 1 of 3)

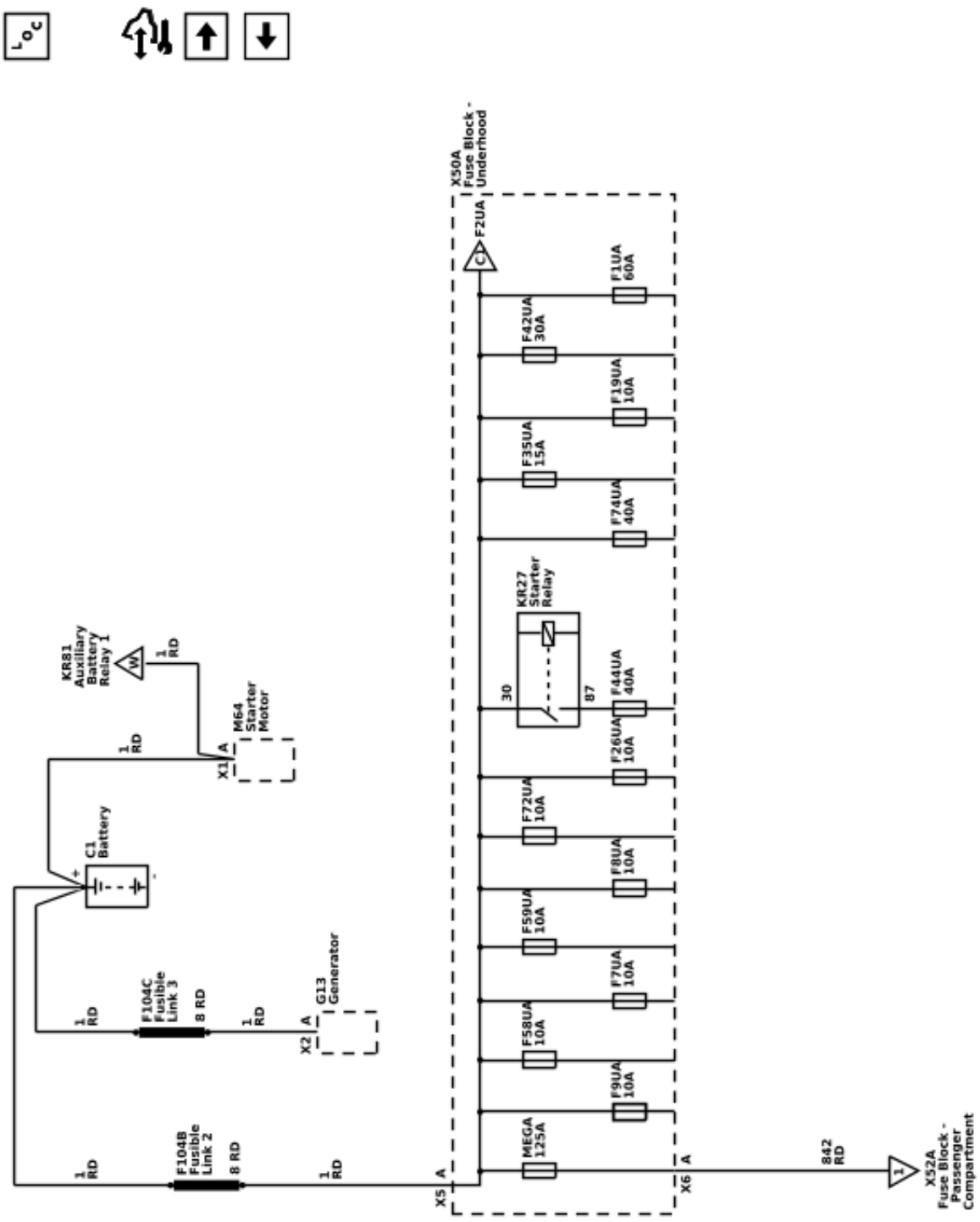

Power Distribution Schematics (B+ Bus - Underhood Fuse Block - 2 of 3)

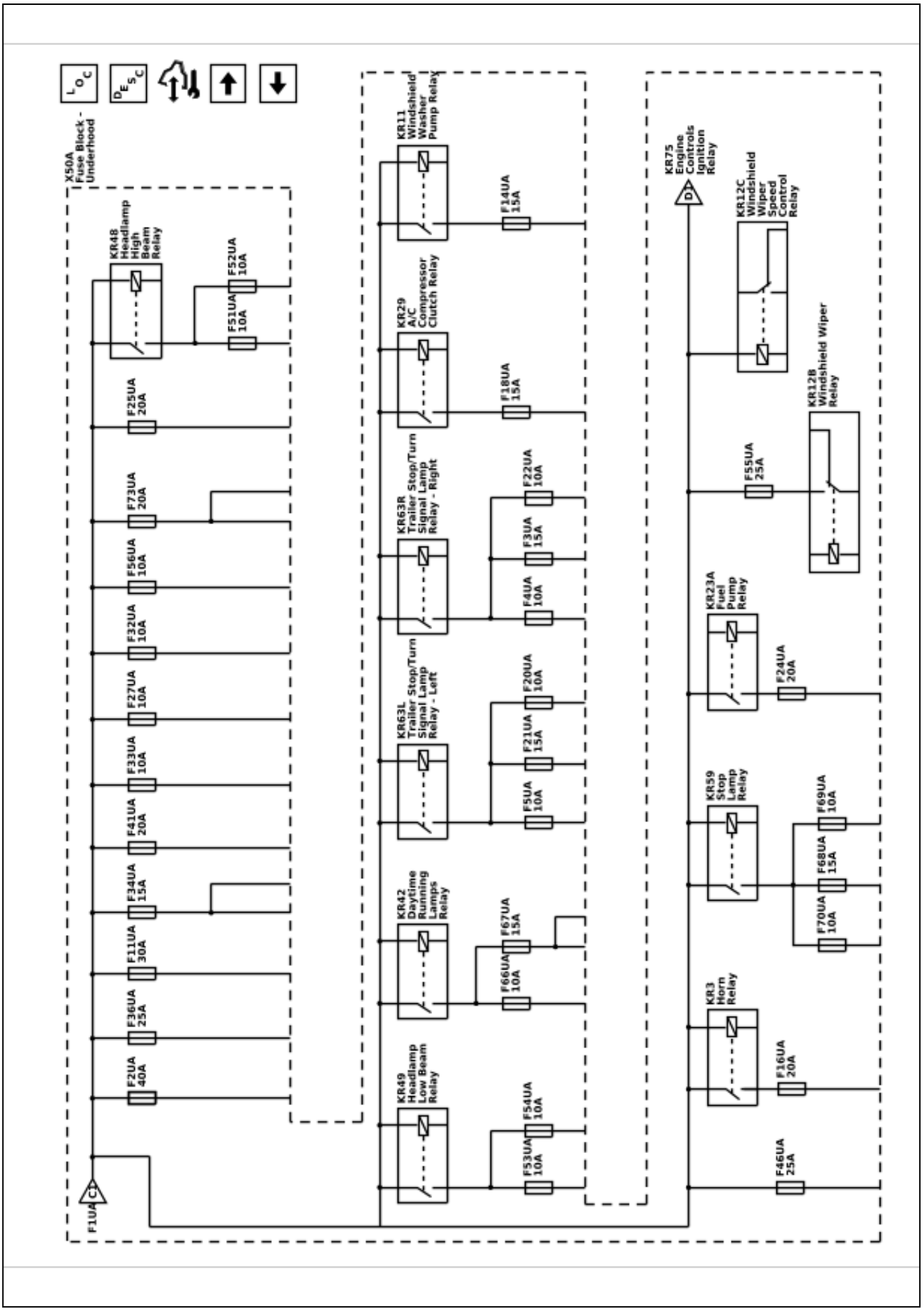

7085753

Power Distribution Schematics (B+ Bus - Underhood Fuse Block - 3 of 3)

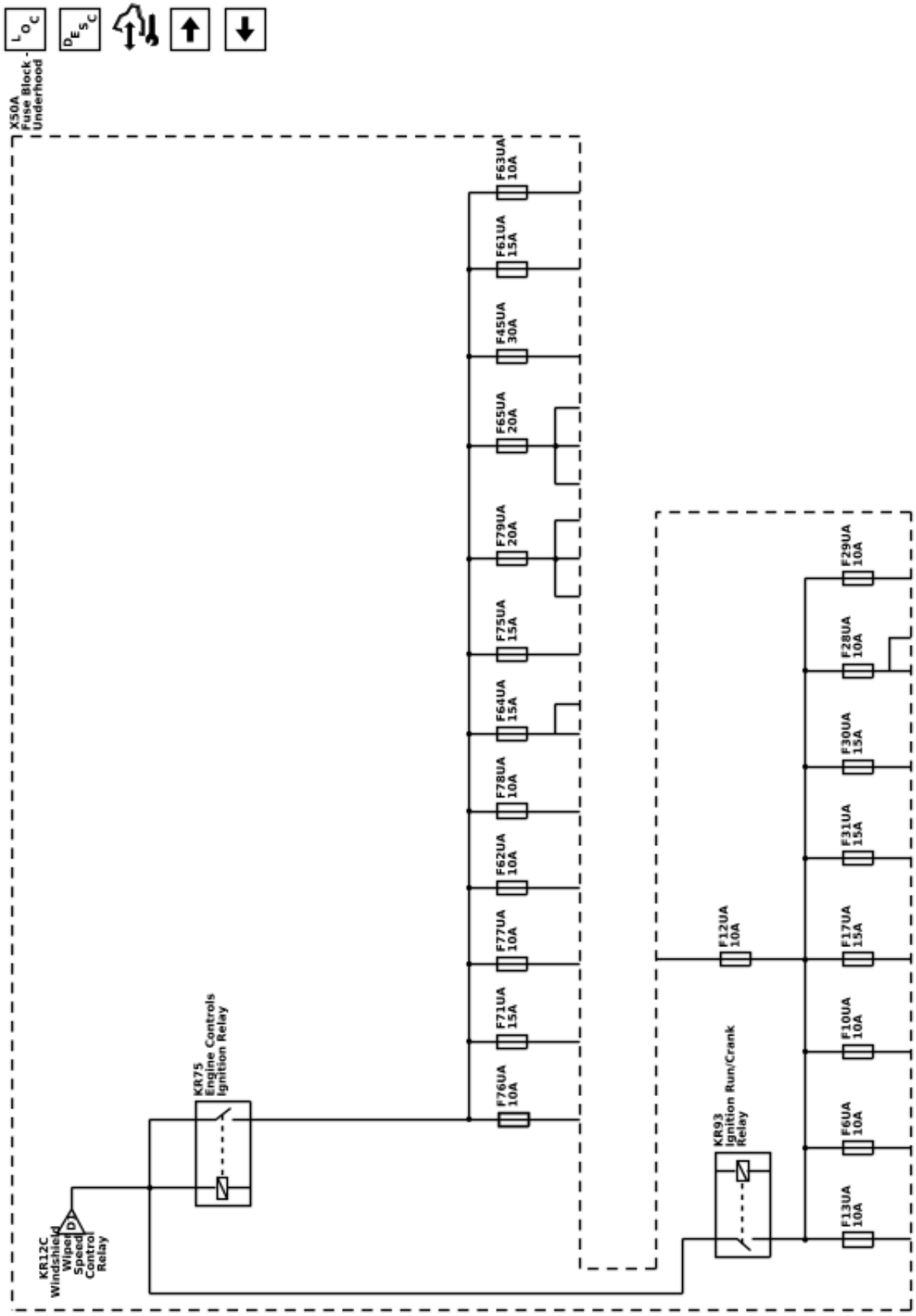

7085754

Power Distribution Schematics (B+ Bus - Passenger Compartment Fuse Block - 1 of 2)

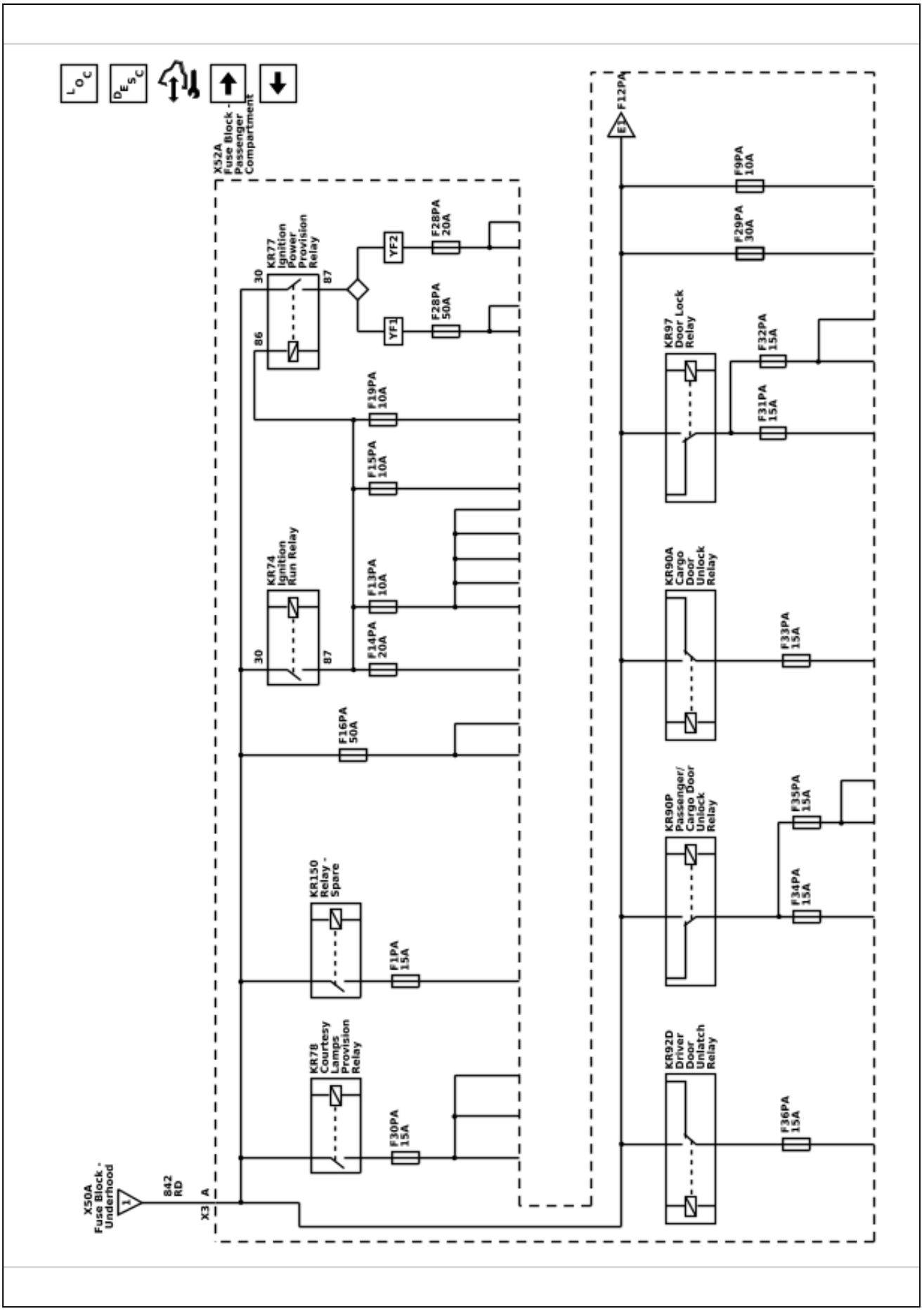

7085755

Power Distribution Schematics (B+ Bus - Passenger Compartment Fuse Block - 2 of 2)

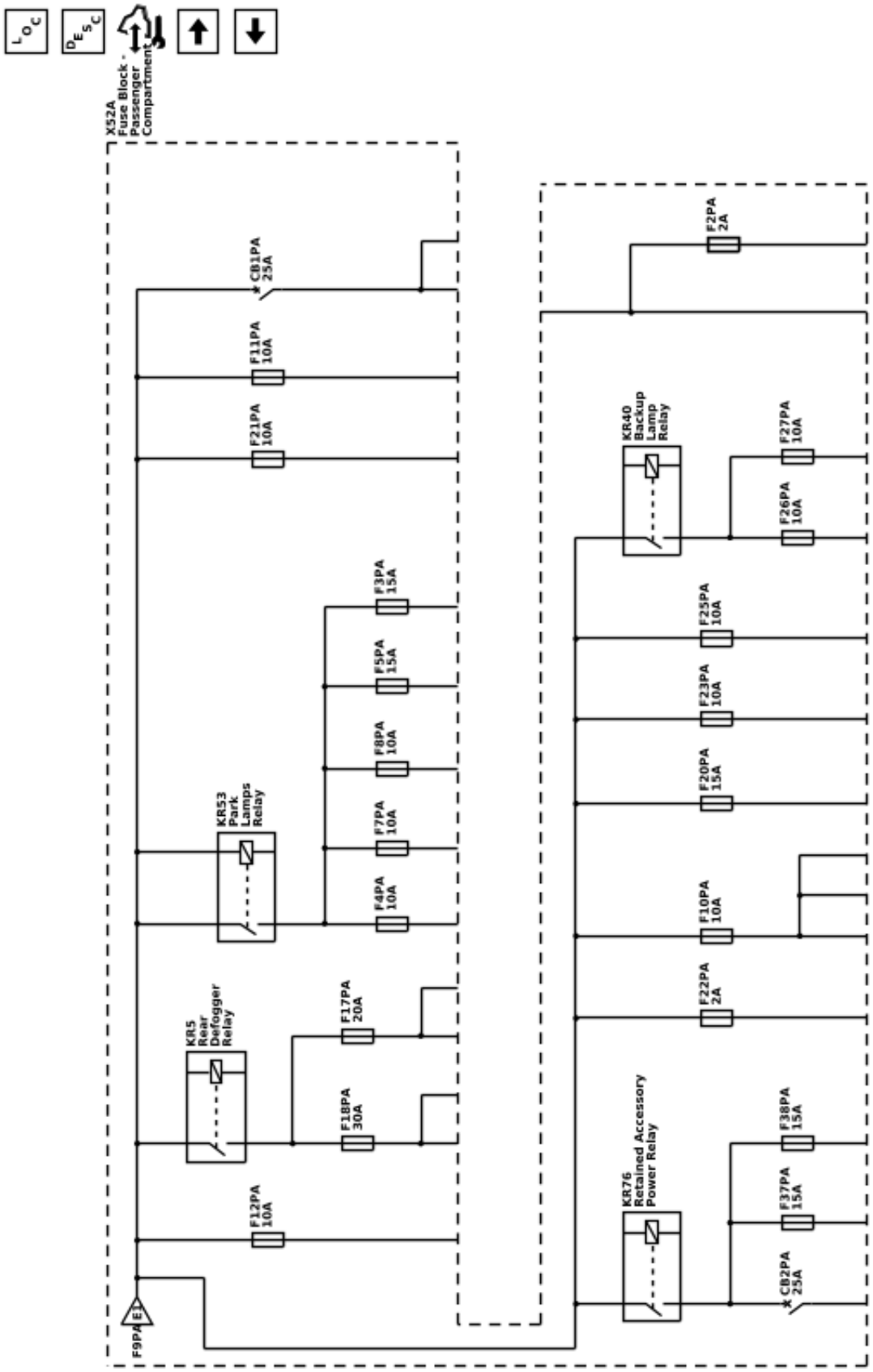

Power Distribution Schematics (Fuse Block - Underhood Auxiliary (9L7))

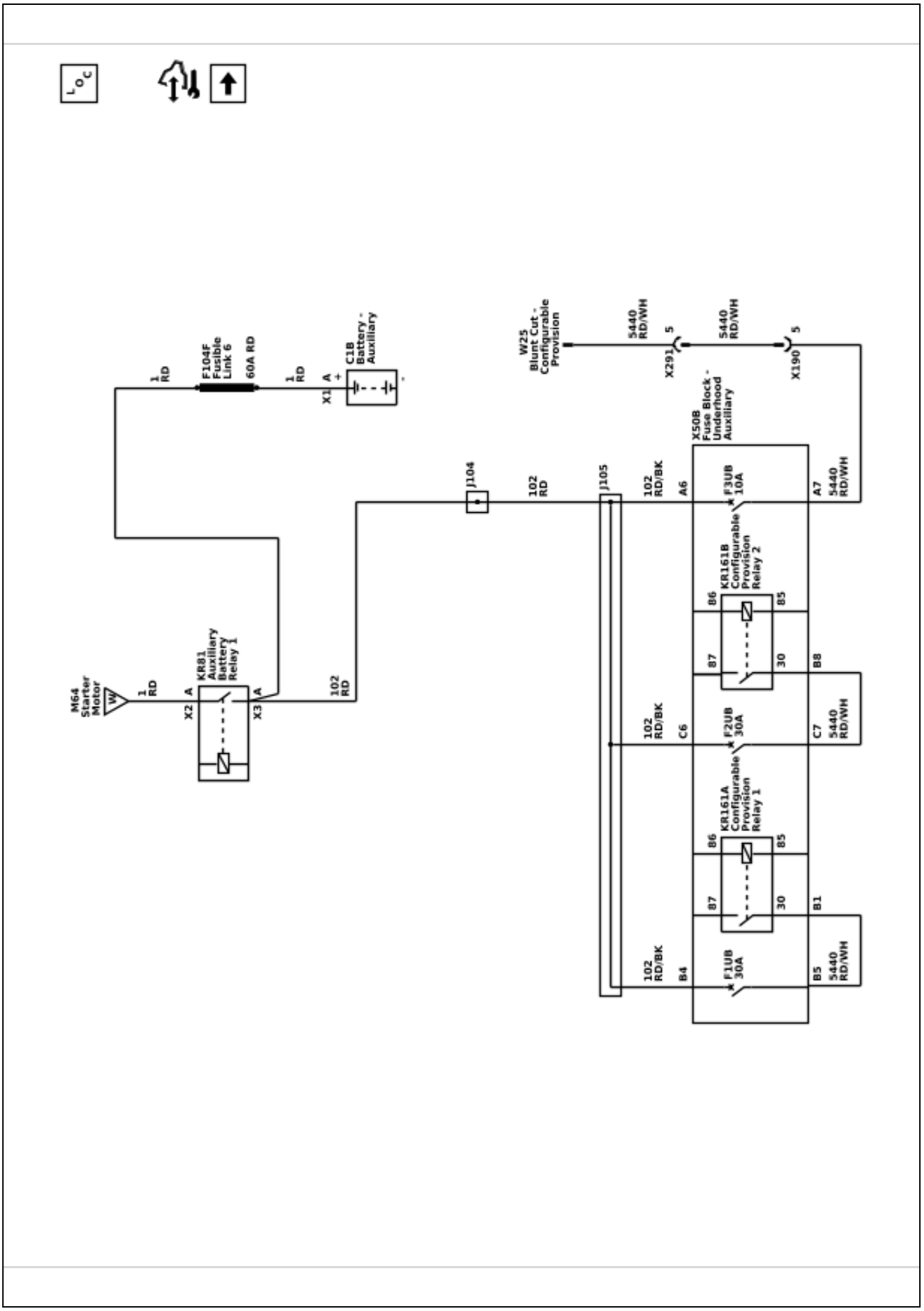

7085756

Power Distribution Schematics (Fuses F7UA, F8UA, F9UA, F25UA, F26UA, F58UA, F59UA, F72UA, and F73UA)

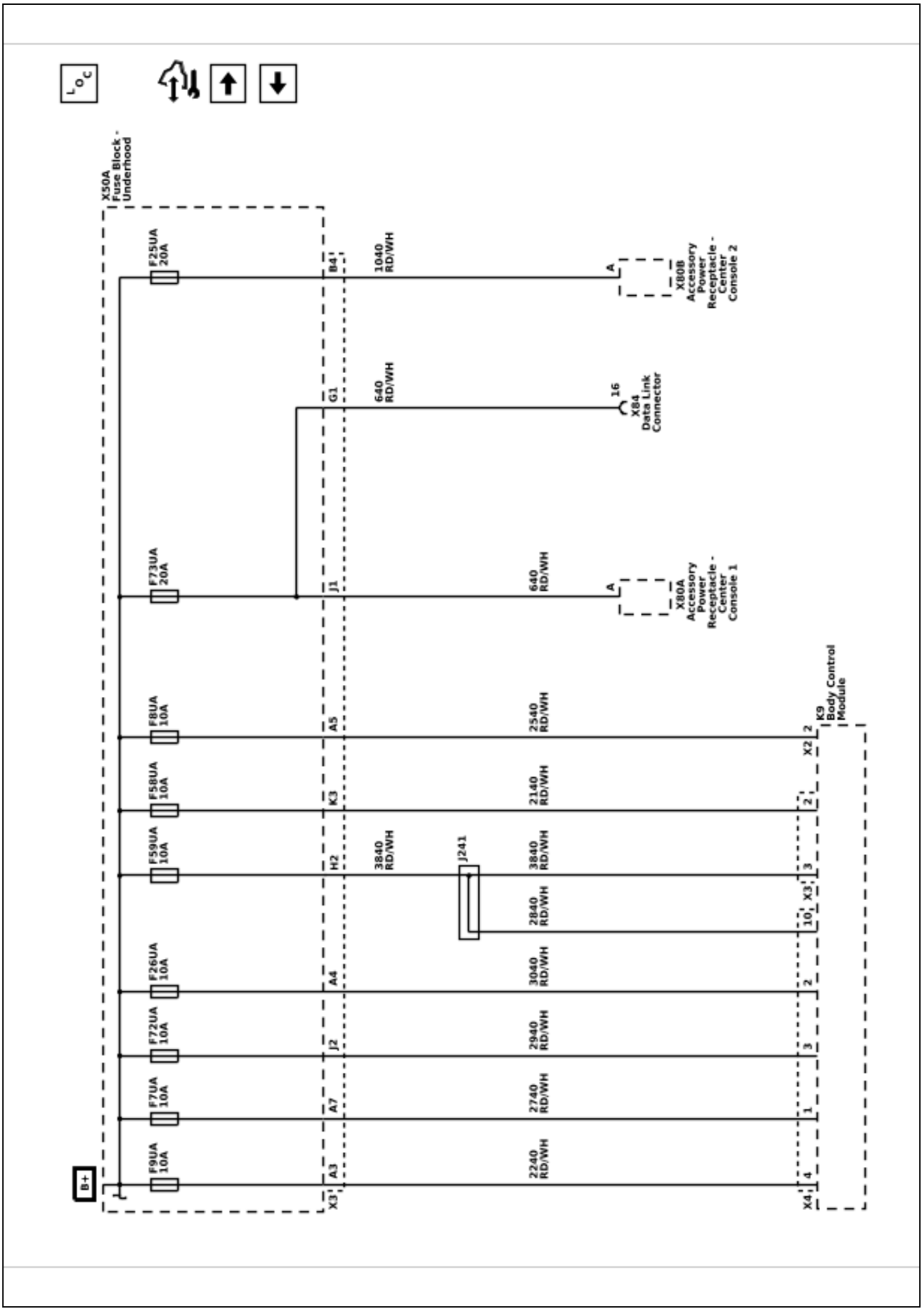

Power Distribution Schematics (Fuses F1UA, F2UA, F11UA, F33UA, F34UA, F35UA, F42UA, and F74UA)

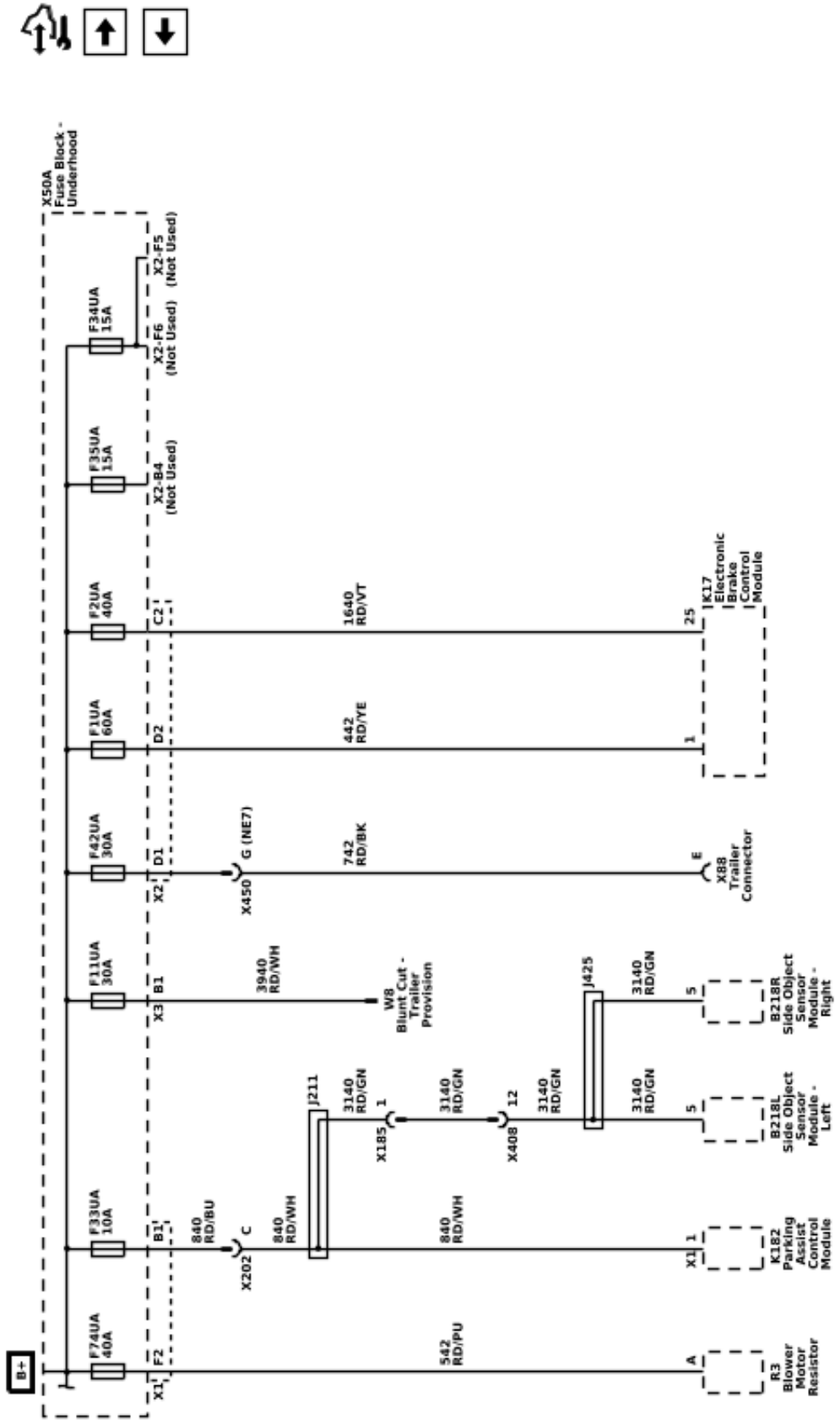

7085758

7085759

Power Distribution Schematics (Fuses F14UA, F16UA, F18UA, and F24UA)

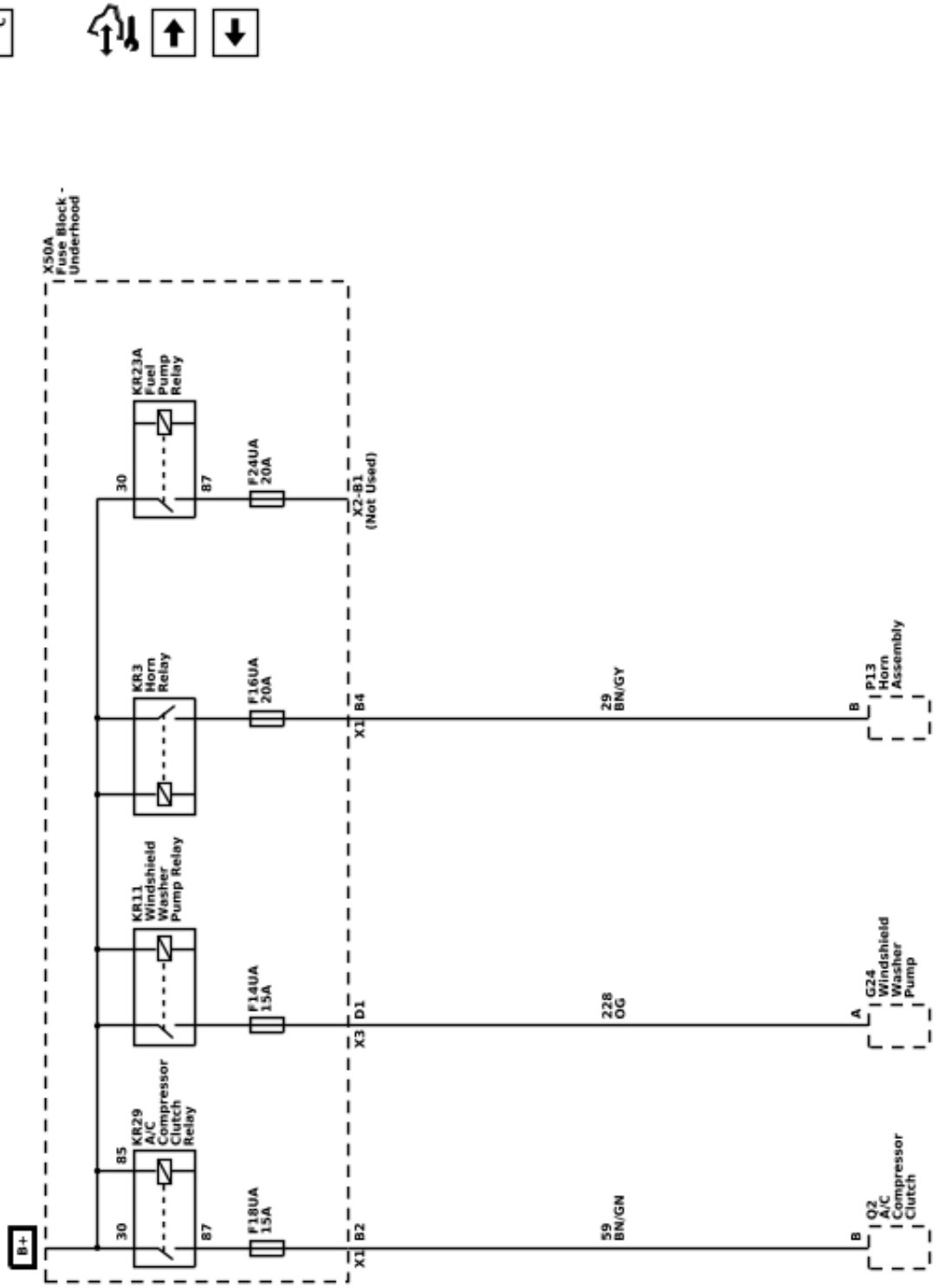

Power Distribution Schematics (Fuses F3UA, F20UA, F21UA, F22UA, F44UA, F51UA, F52UA, F68UA, F69UA, and F70UA)

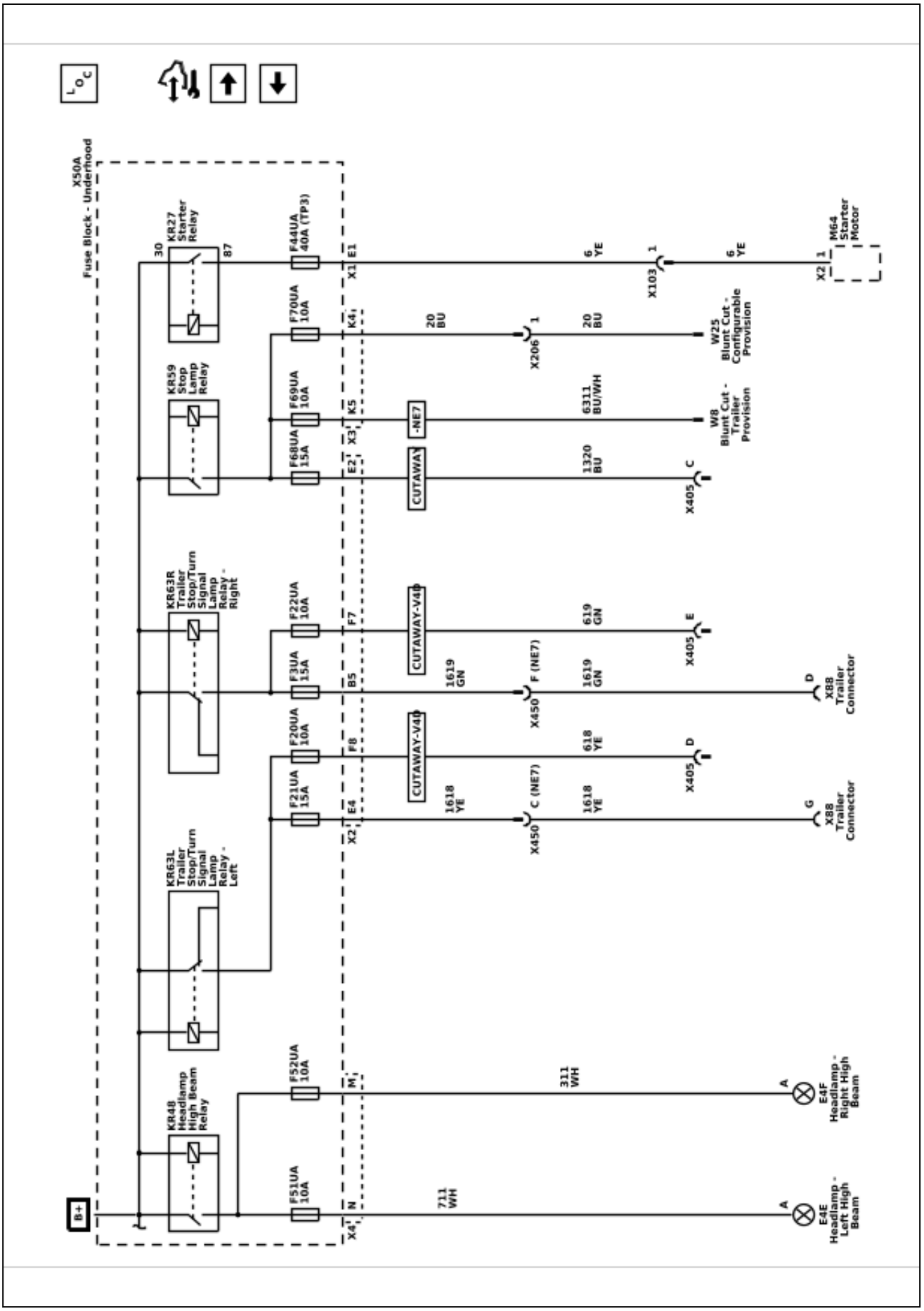

Power Distribution Schematics (Fuses F27UA, F32UA, F53UA, F54UA, F66UA, and F67UA)

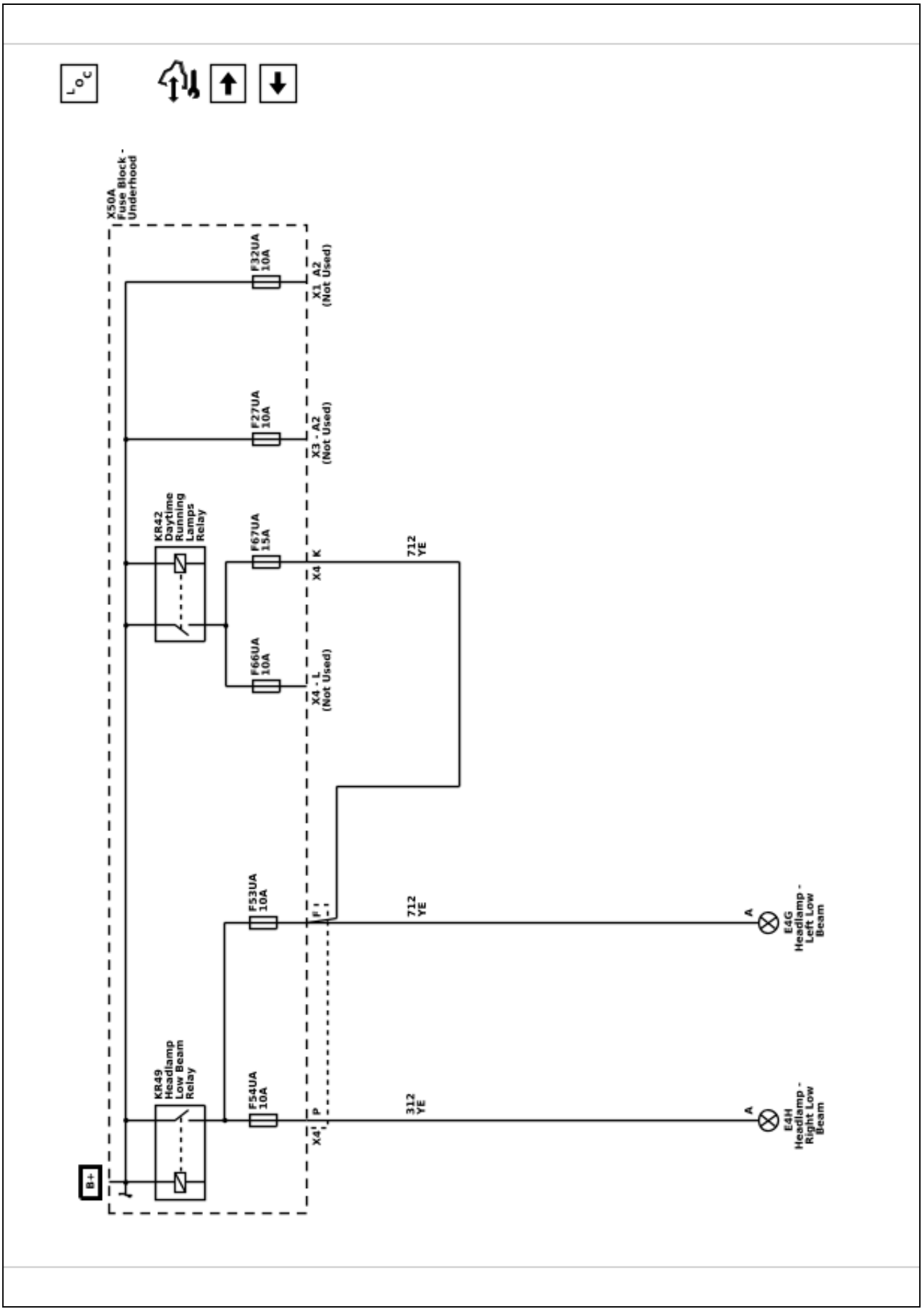

Power Distribution Schematics (Fuses F19UA, F36UA, F46UA, F55UA, and F56UA)

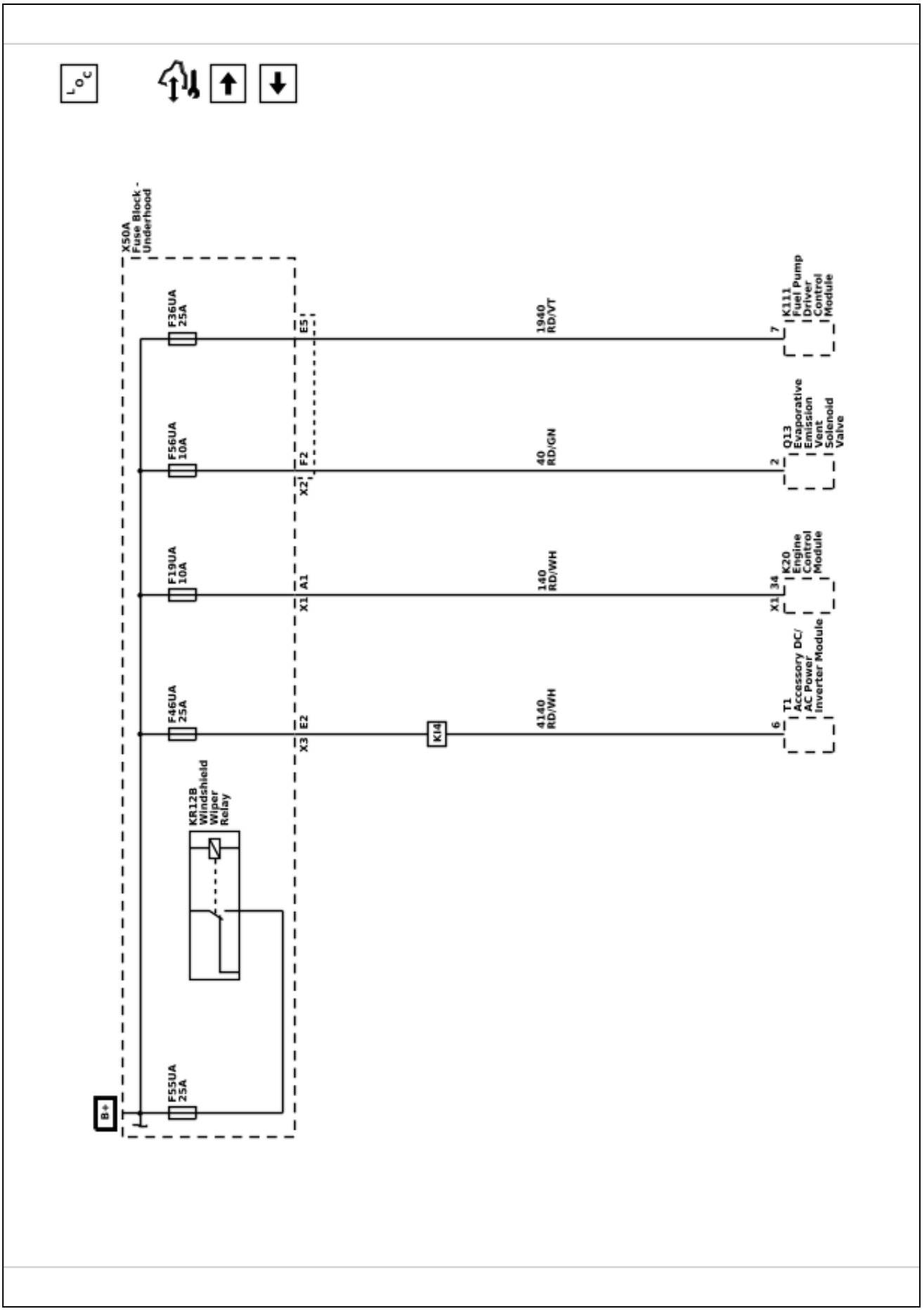

7085763

Power Distribution Schematics (Fuses F6UA, F10UA, F13UA, F17UA, F28UA, F29UA, F30UA, and F31UA)

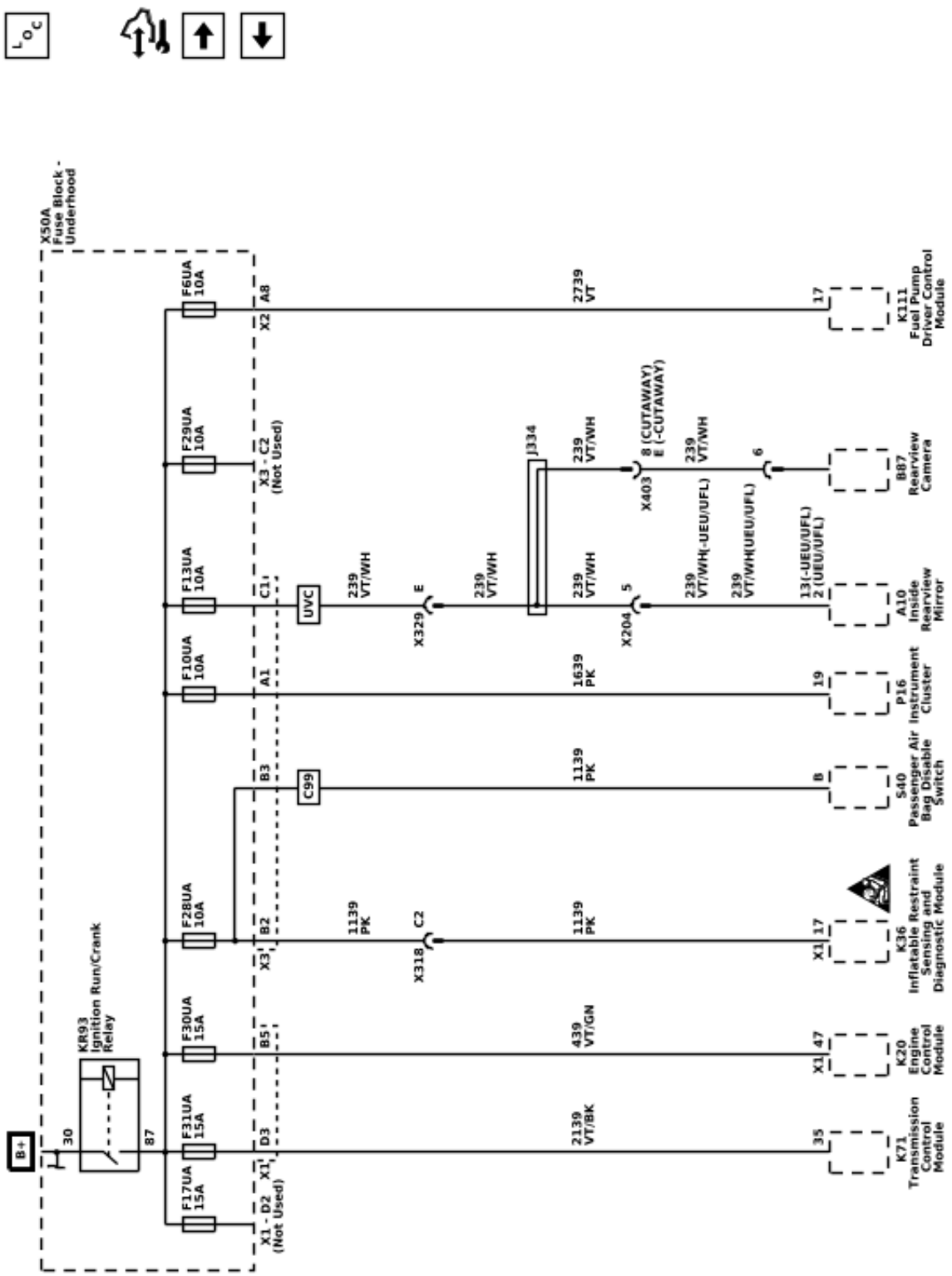

Power Distribution Schematics (Fuses F61UA, F62UA, F64UA, F77UA, and F78UA)

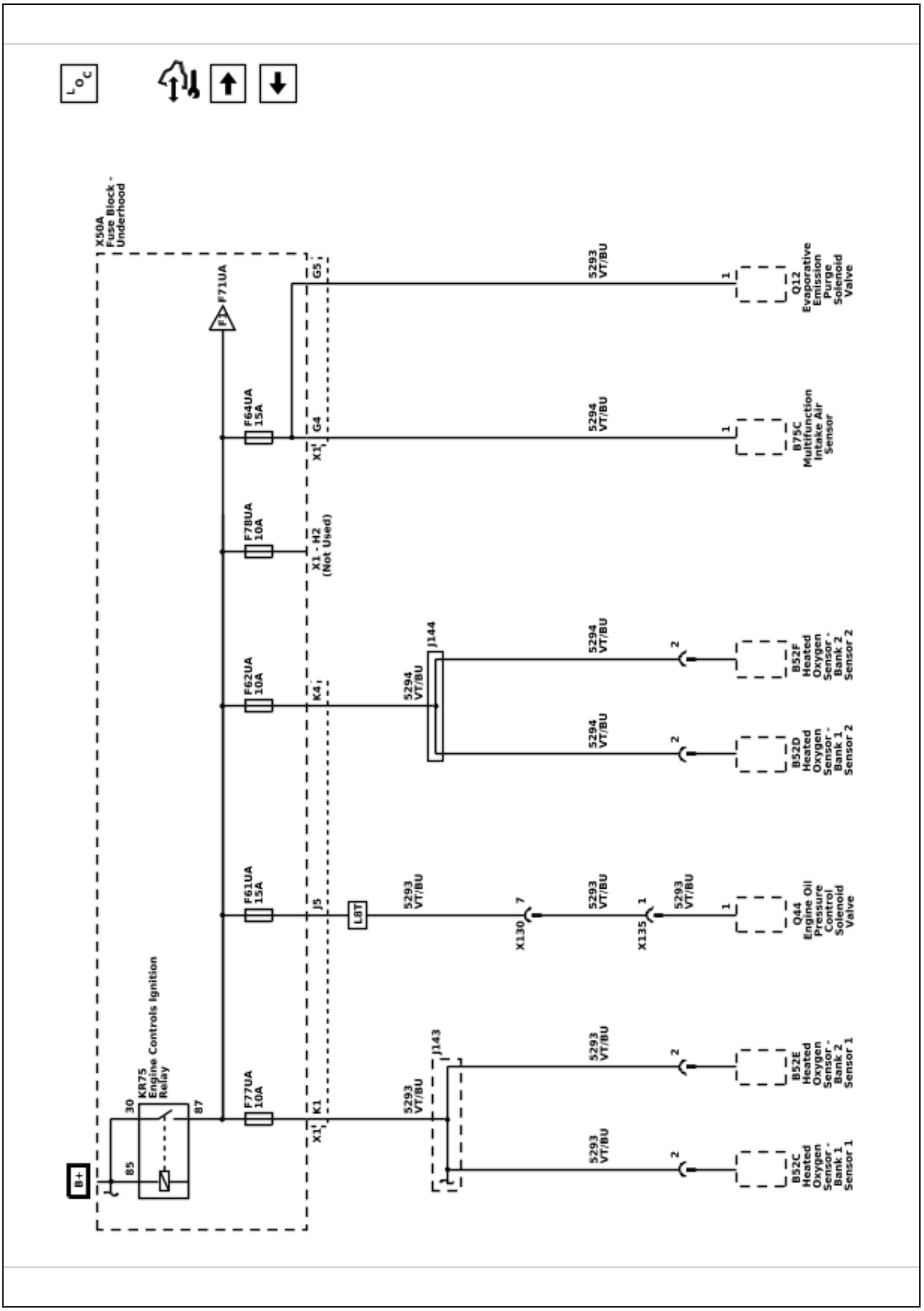

7085765

Power Distribution Schematics (Fuses F45UA, F71UA, F75UA, and F79UA)

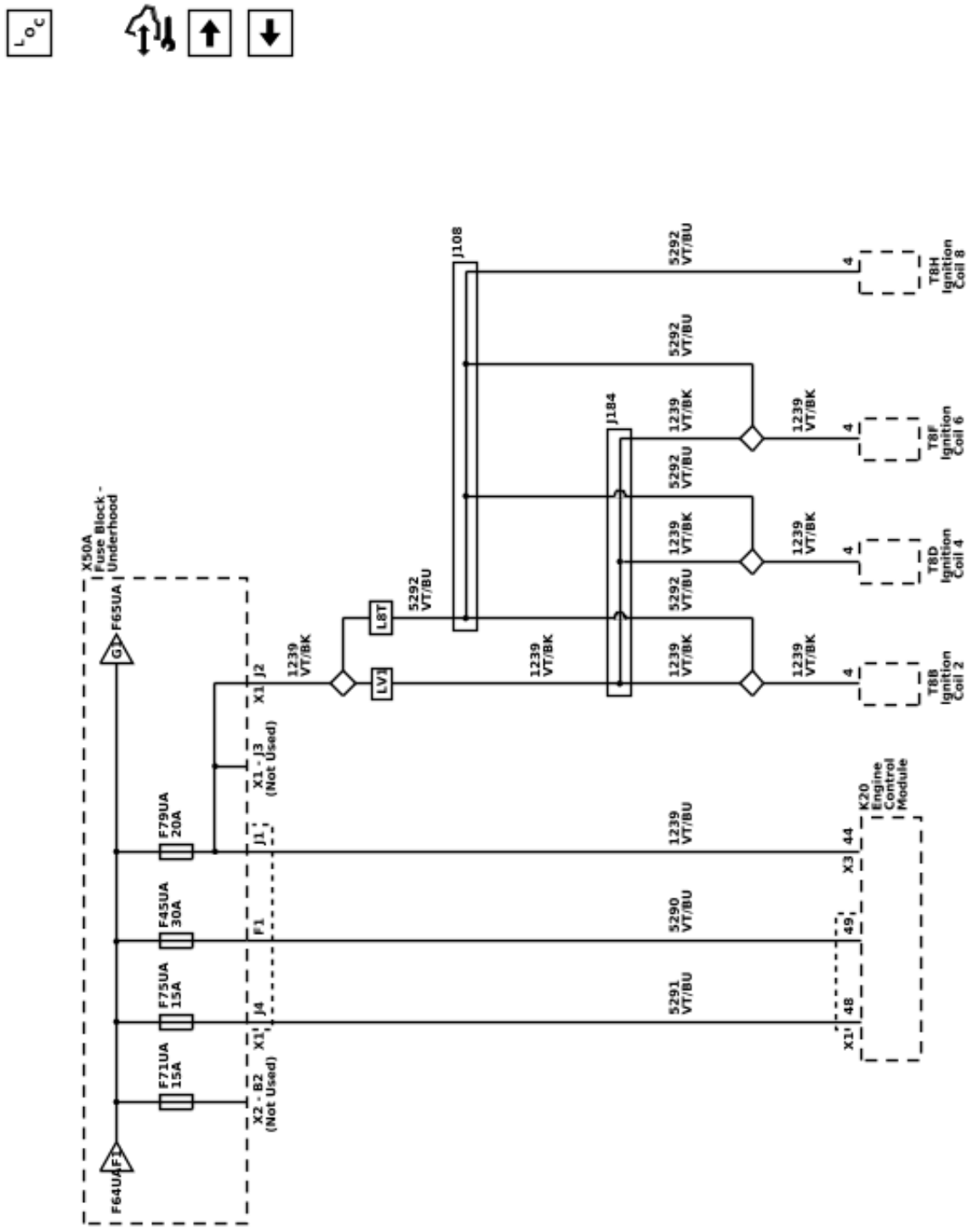

Power Distribution Schematics (Fuse F65UA)

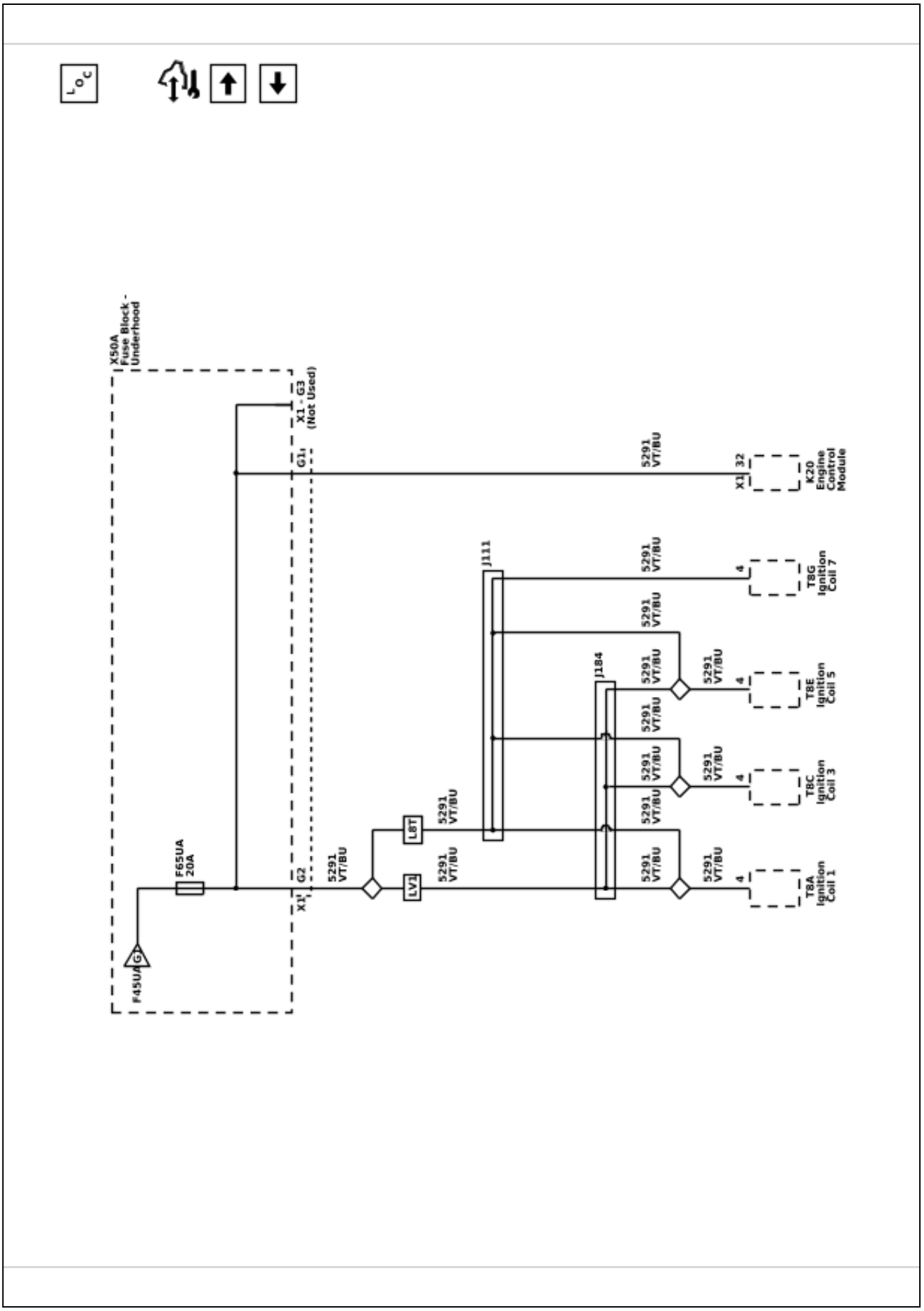

7085766

Power Distribution Schematics (Fuses F9PA, F11PA, F20PA, F21PA, F23PA, F25PA, F29PA, and Circuit Breaker CB1PA)

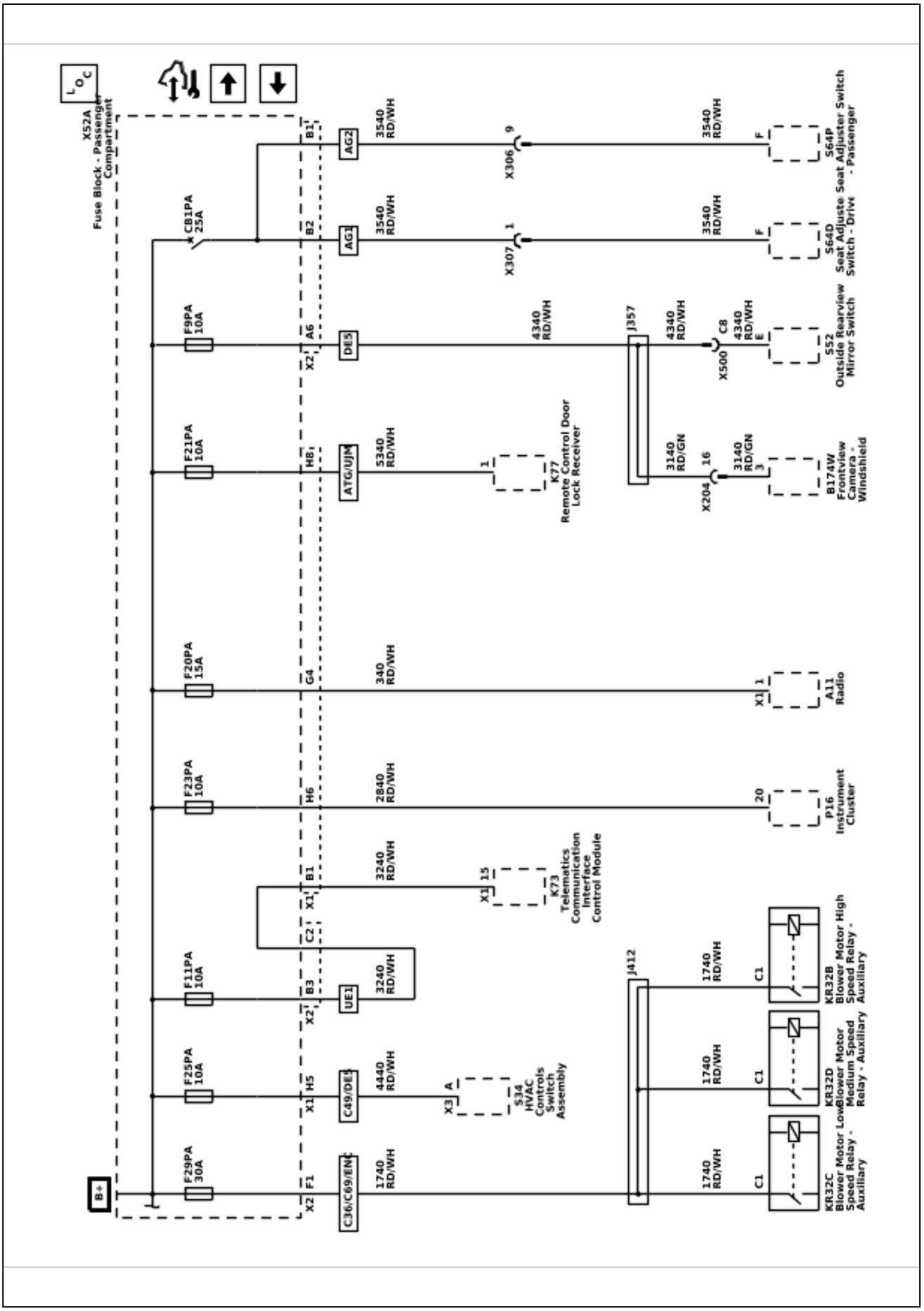

7085768

Power Distribution Schematics (Ignition Switch and Fuse F22PA)

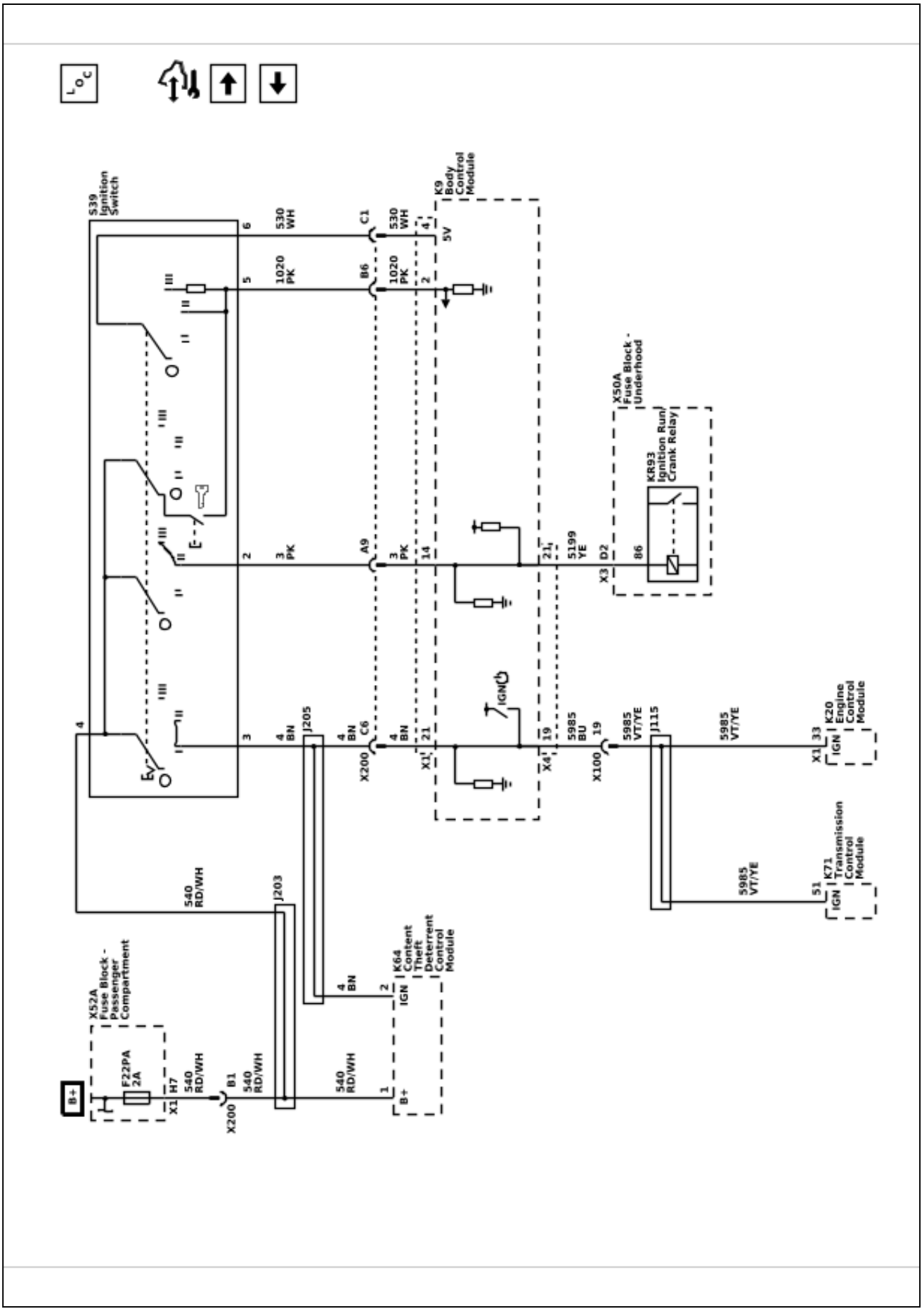

Power Distribution Schematics (Fuses F9PA, F10PA, F17PA, F18PA, F37PA, F38PA, and Circuit Breaker CB2PA)

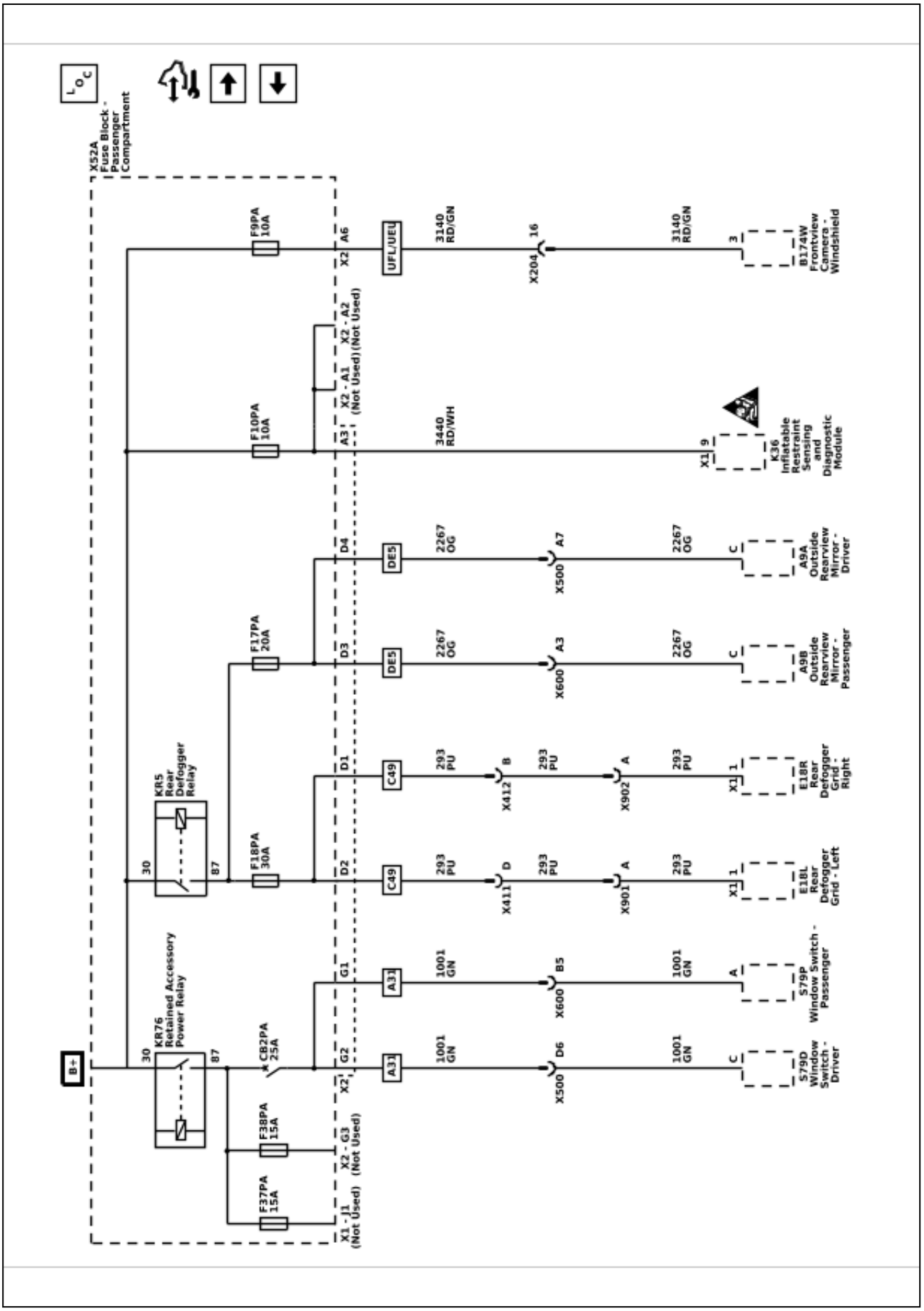

Power Distribution Schematics (Fuses F33PA, F34PA, F35PA, and F36PA)

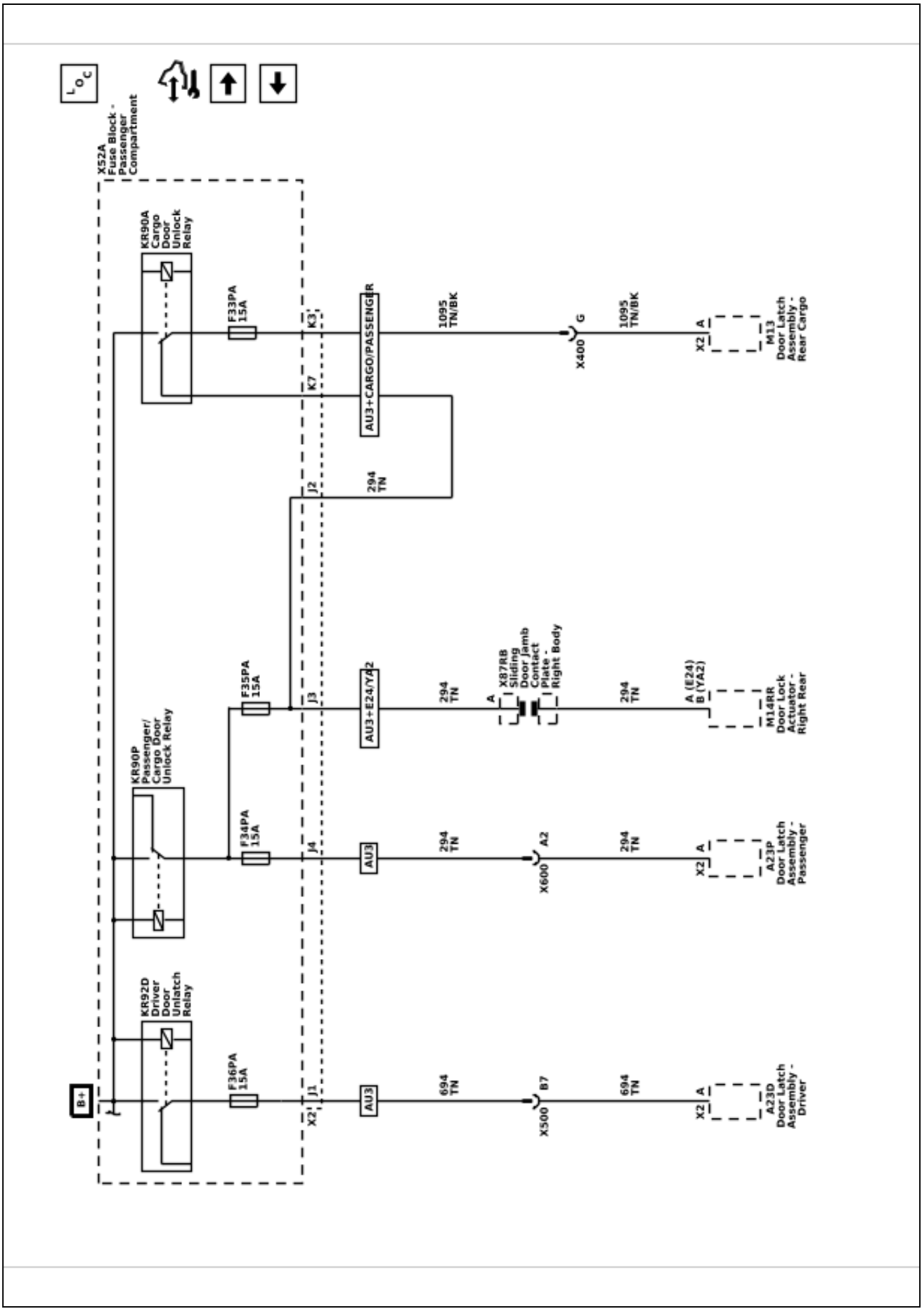

7085771

Power Distribution Schematics (Fuses F16PA, F31PA, and F32PA)

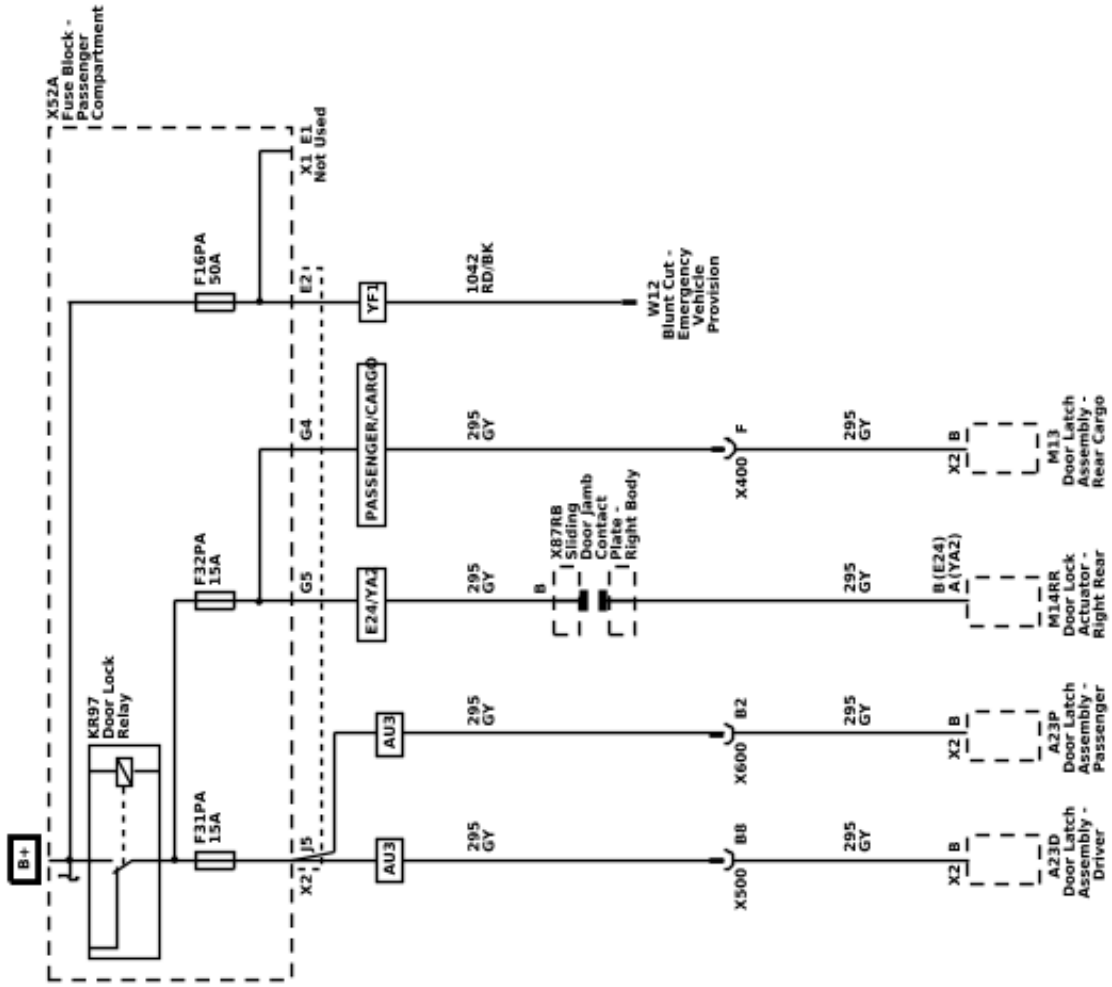

Power Distribution Schematics (Fuses F13PA and F14PA)

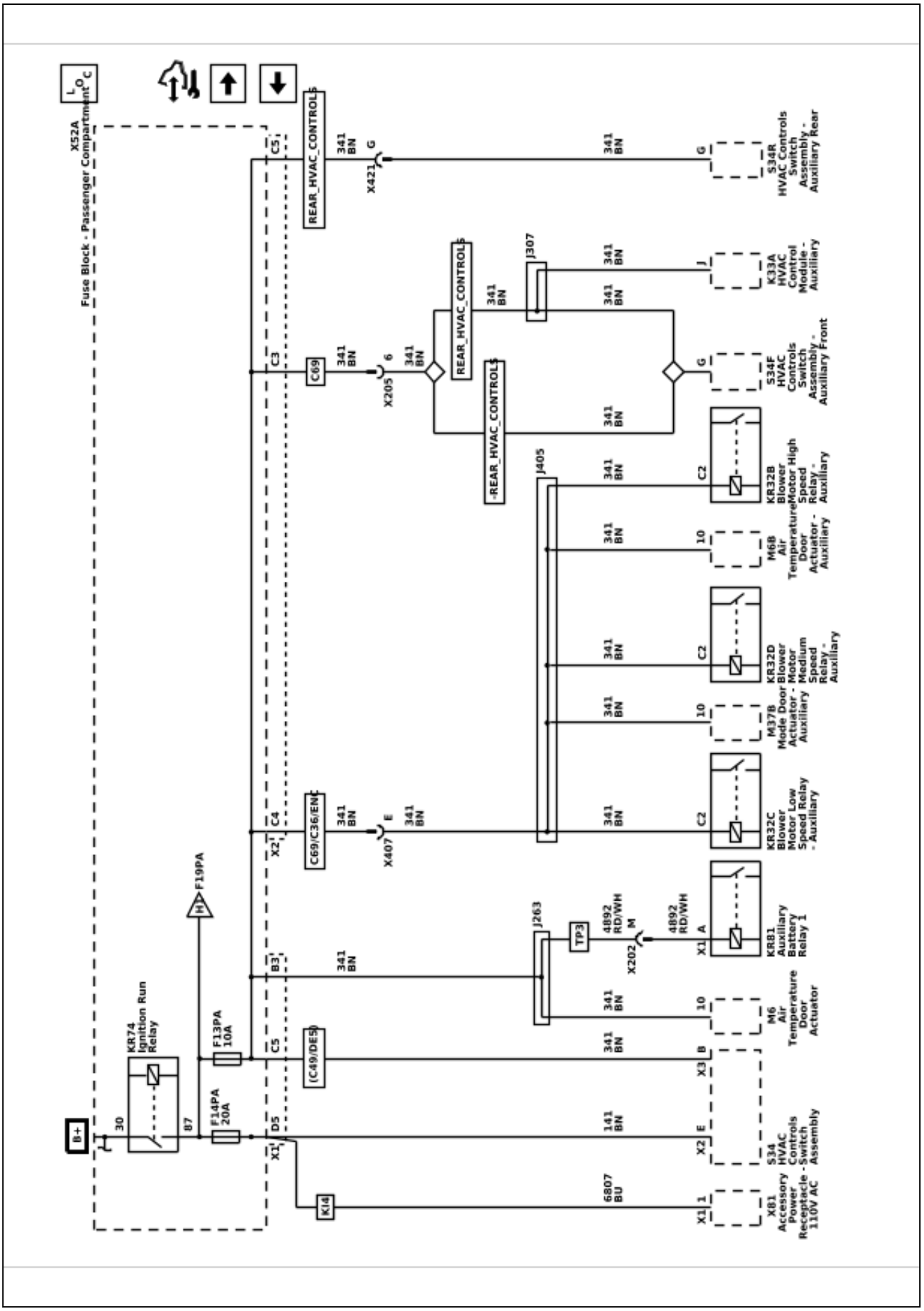

7085773

Power Distribution Schematics (Fuses F15PA, F19PA, F26PA, F27PA, and F28PA)

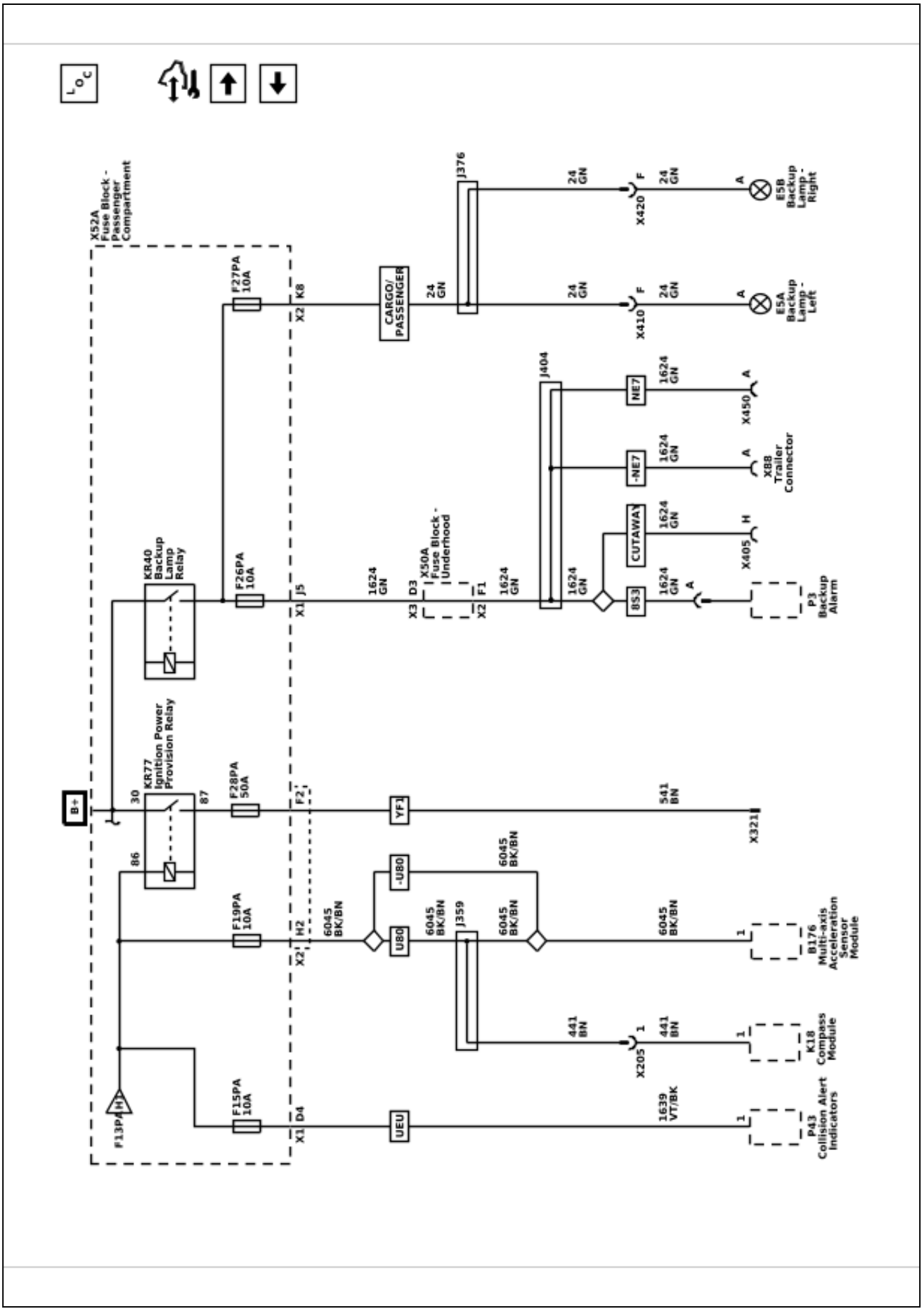

Power Distribution Schematics (Fuses F3PA, F4PA, F5PA, F7PA, and F8PA)

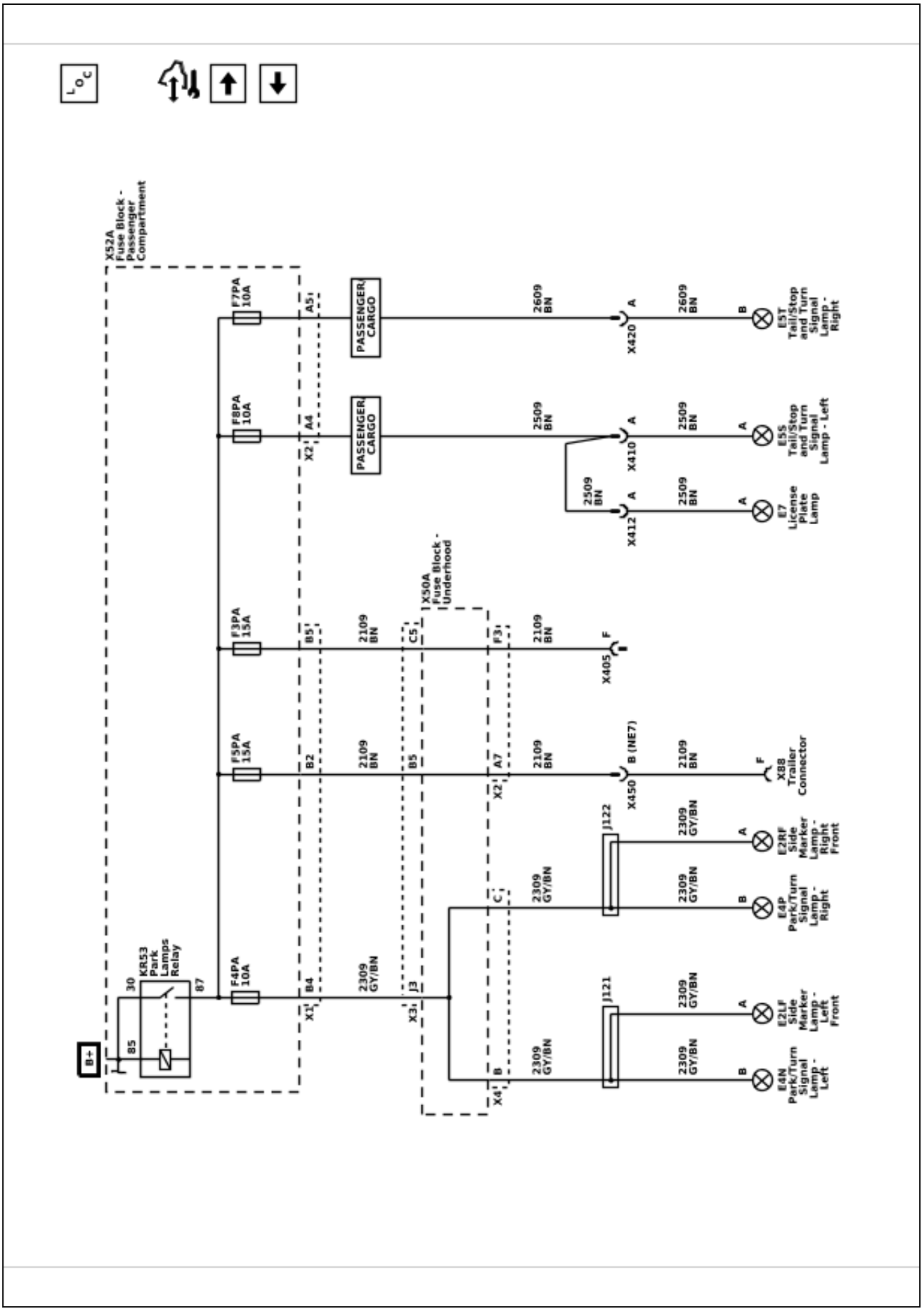

7085775

Power Distribution Schematics (Fuse F30PA)

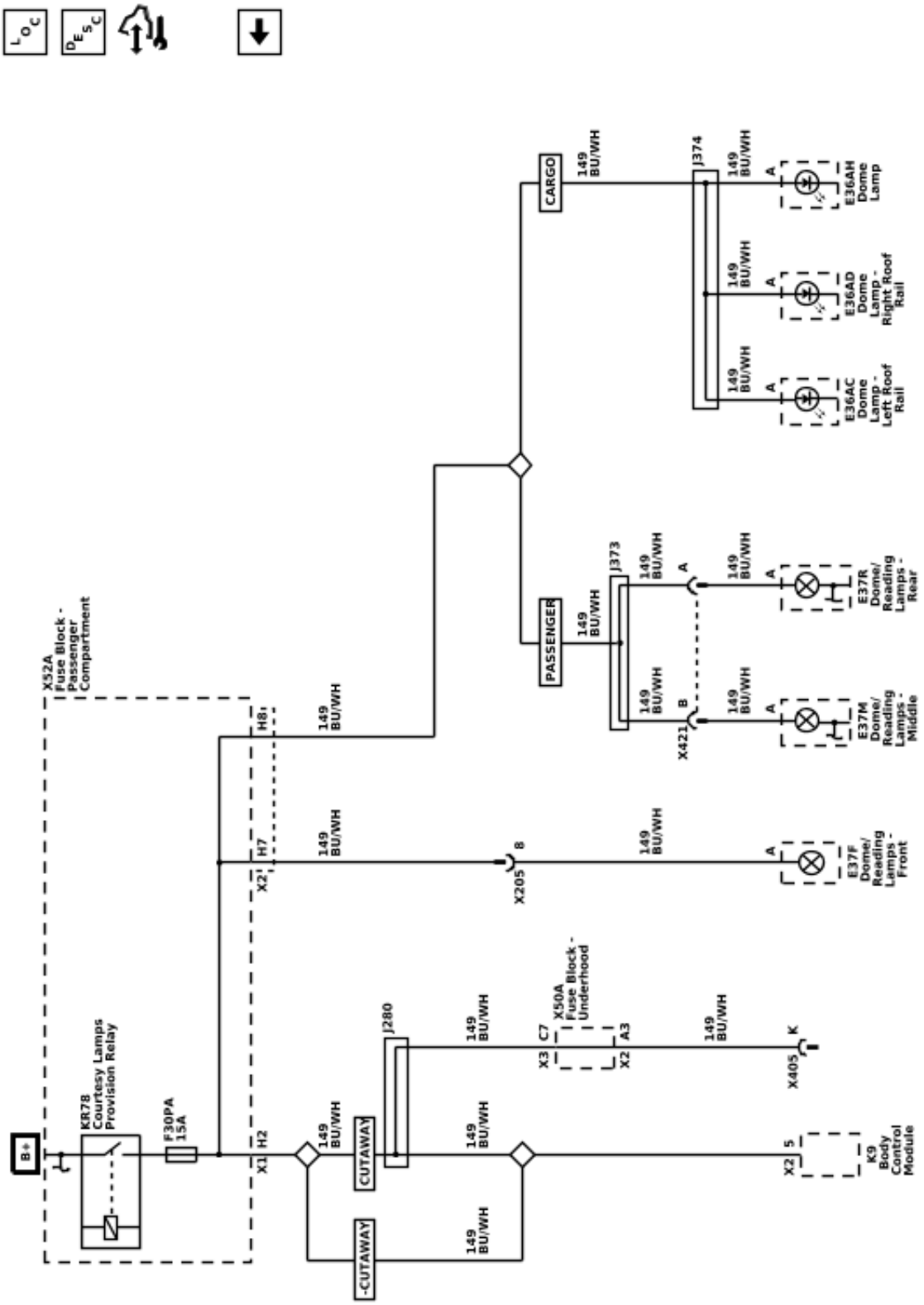

Power Moding Schematics (Ignition Run/Crank Relay)

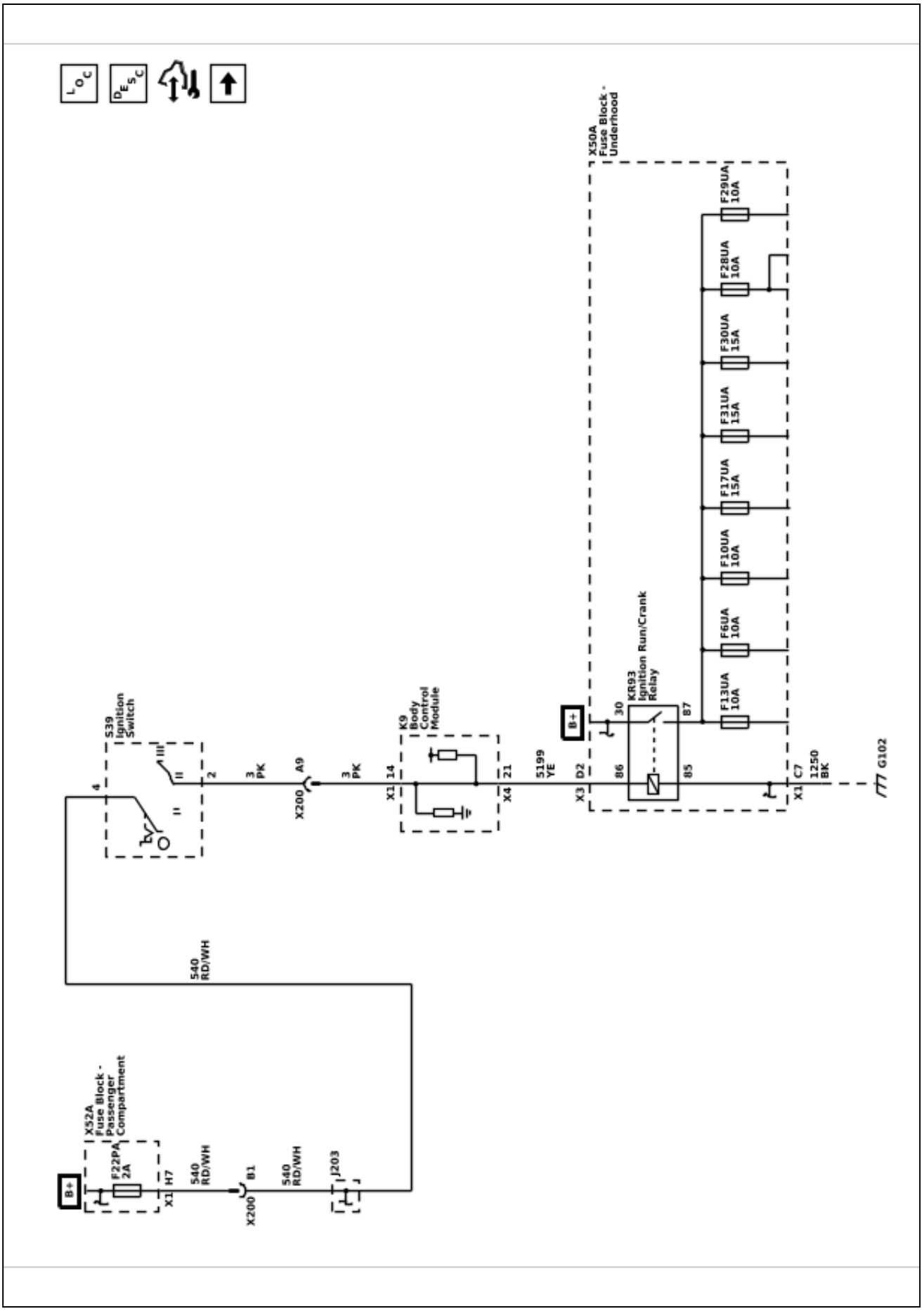

7085776

7085777

Power Moding Schematics (Retained Accessory Power Relay and Ignition Run Relay)

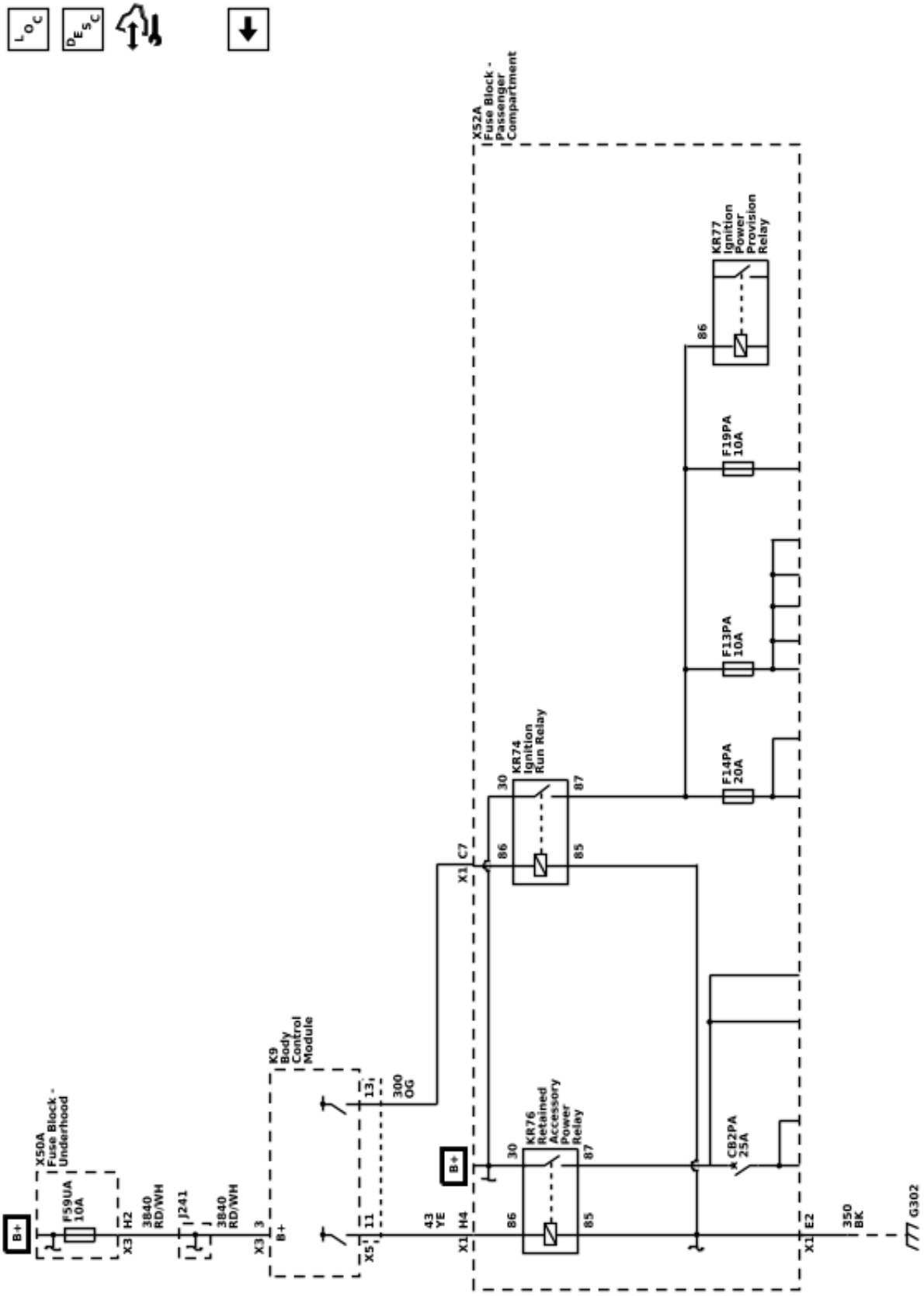

7085778

Ground Distribution Schematics (G100 and G101)

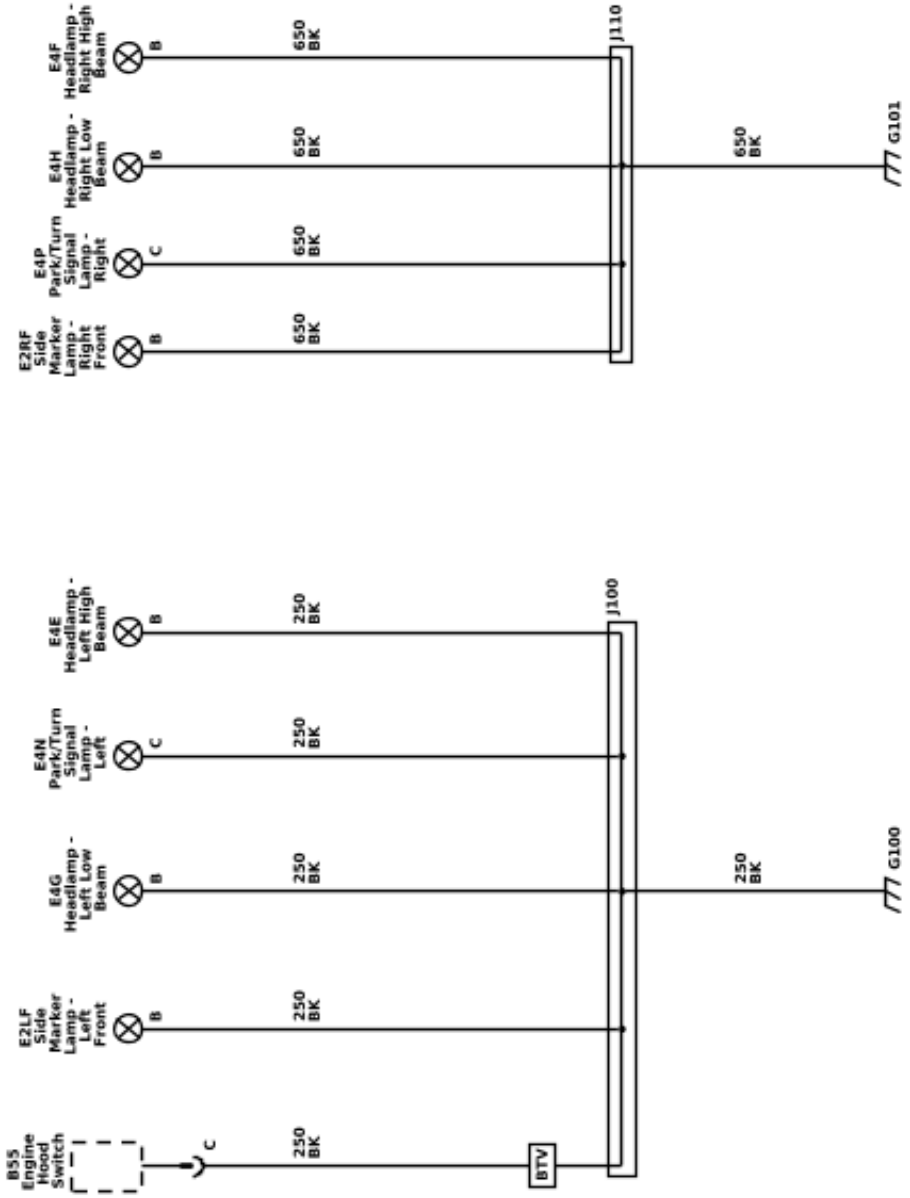

7085779

Ground Distribution Schematics (G102 and G109)

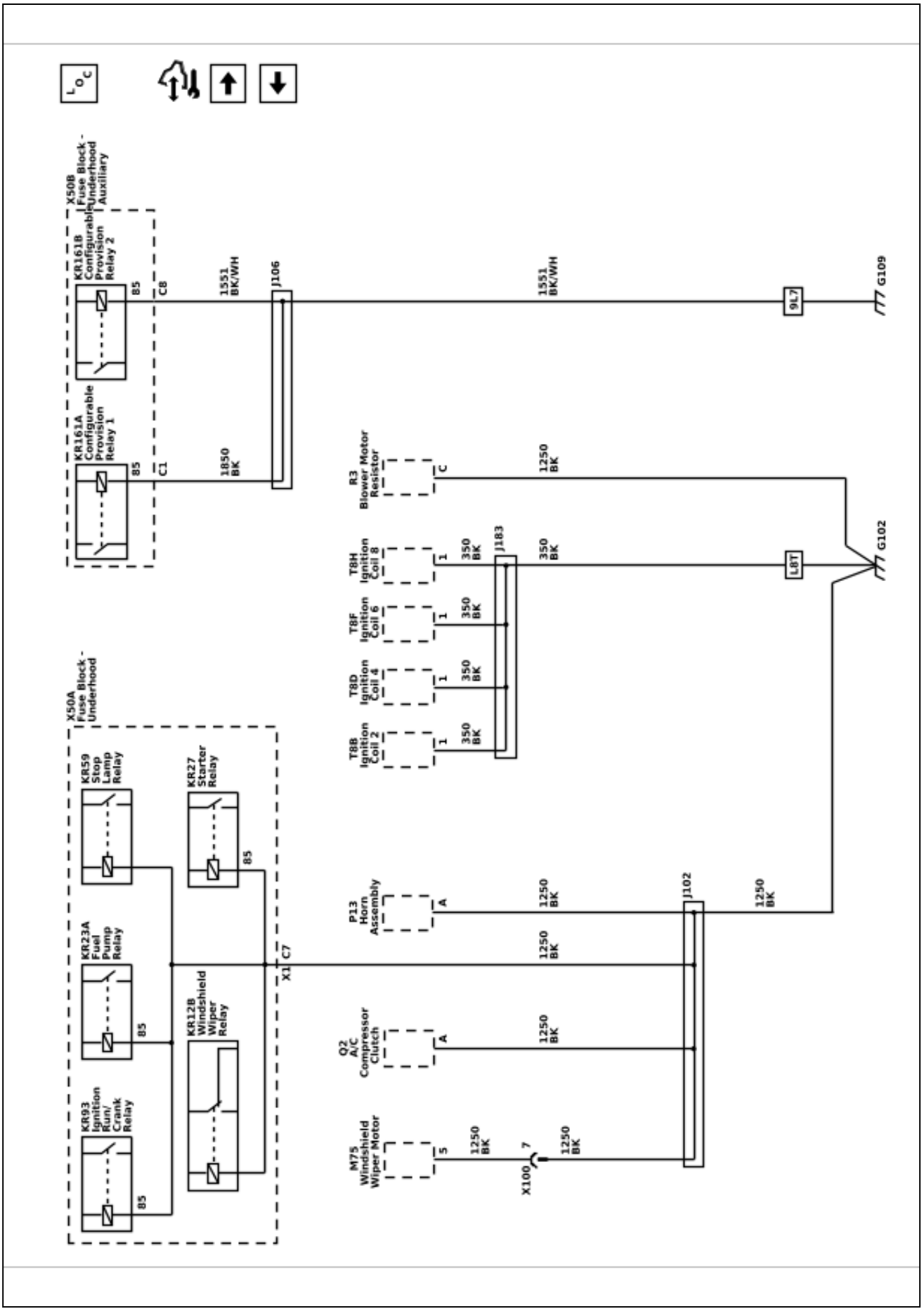

Ground Distribution Schematics (G103, G104, G105, G106, G107 and G108)

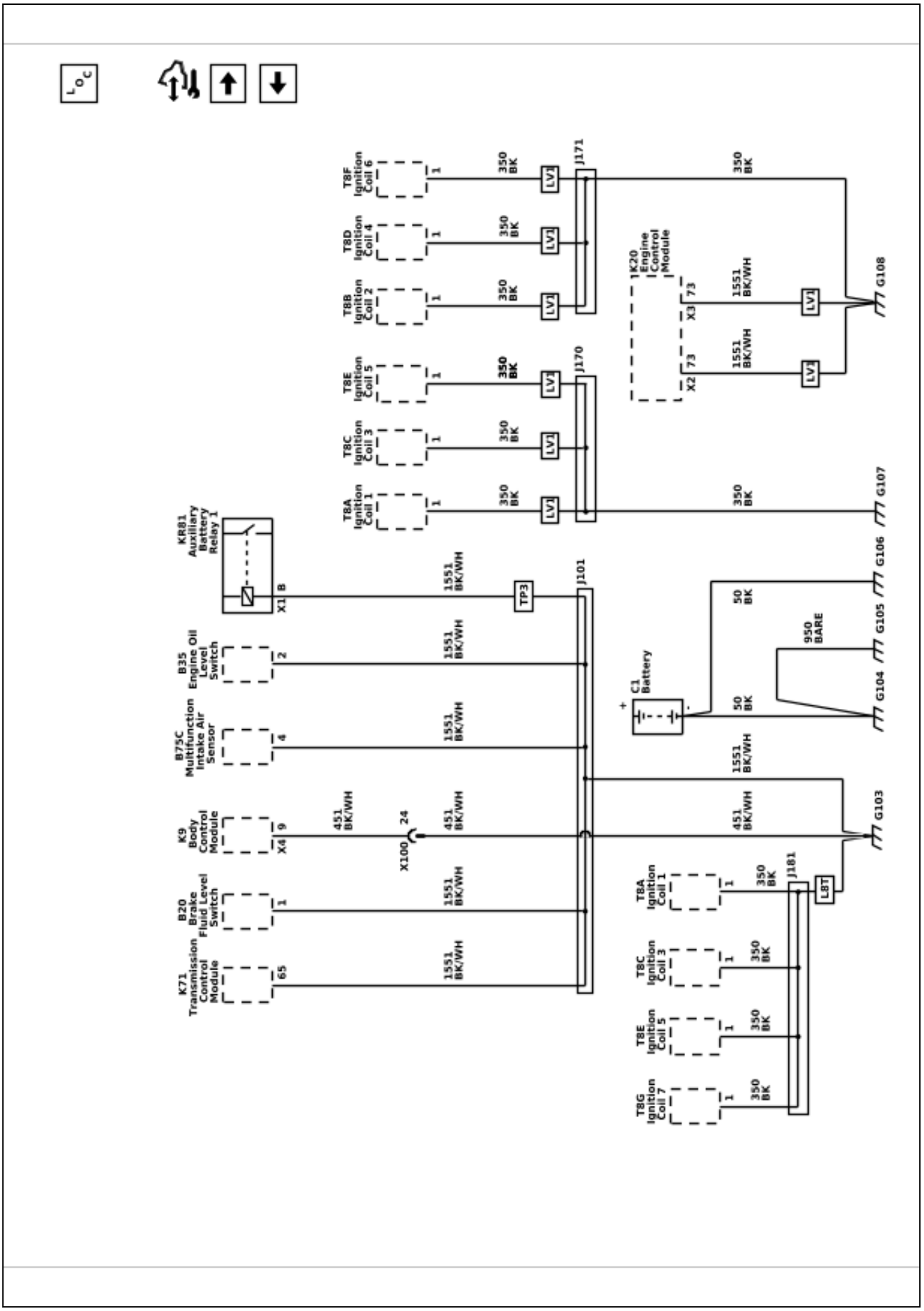

Ground Distribution Schematics (G300, G301, G304, and G305)

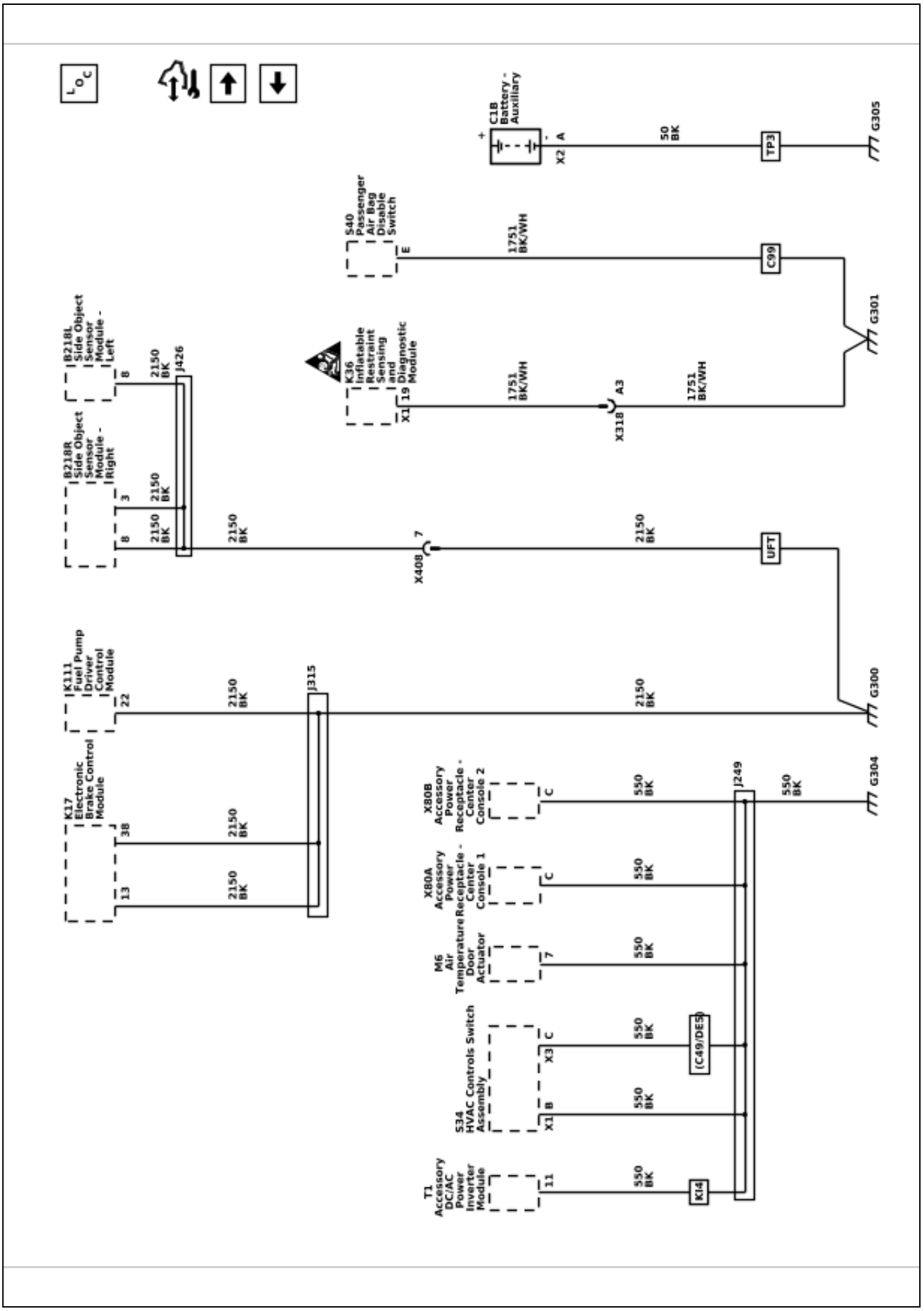

Ground Distribution Schematics (G302 - 1 of 2)

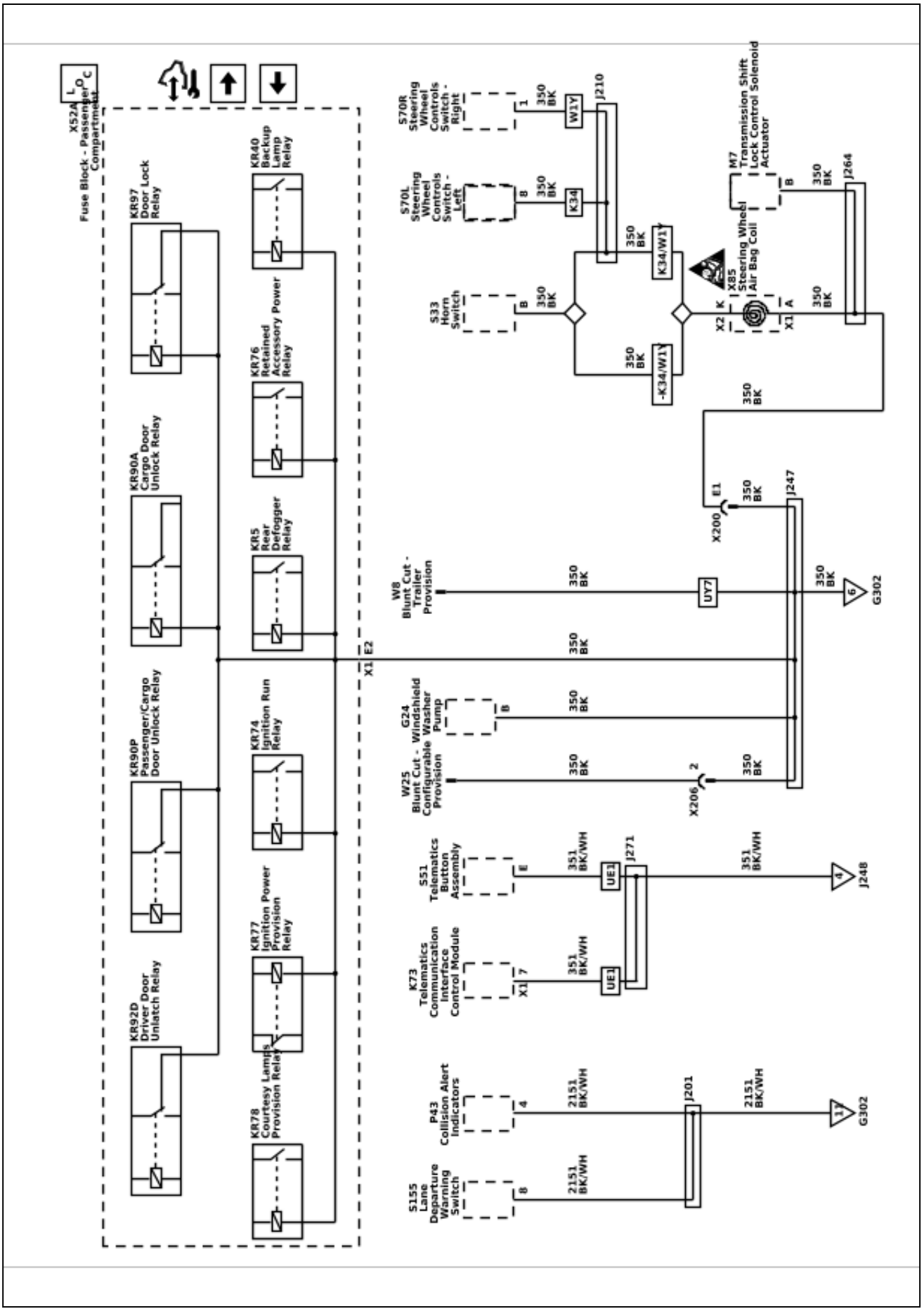

7085783

Ground Distribution Schematics (G302 - 2 of 2)

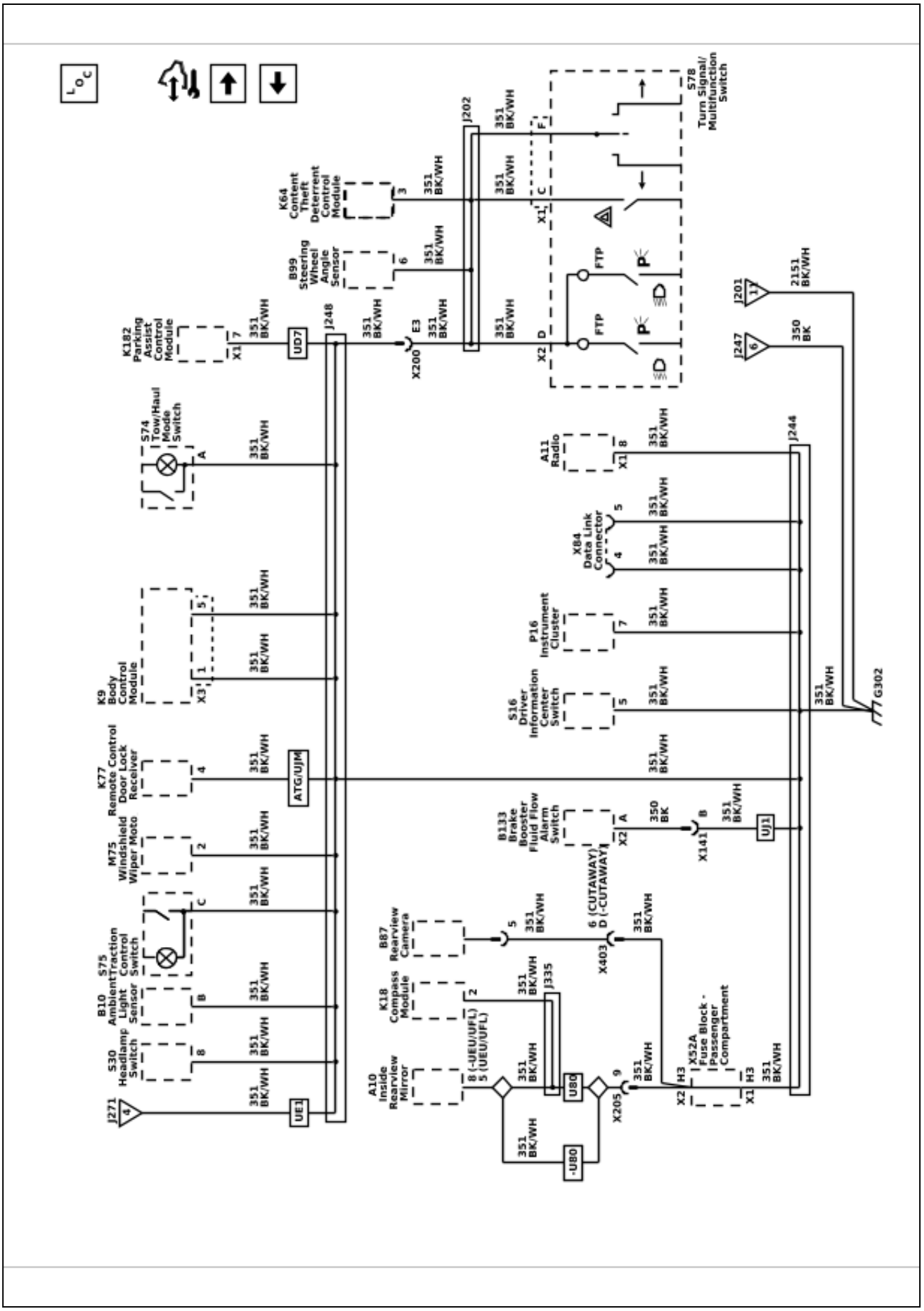

7085784

Ground Distribution Schematics (G347)

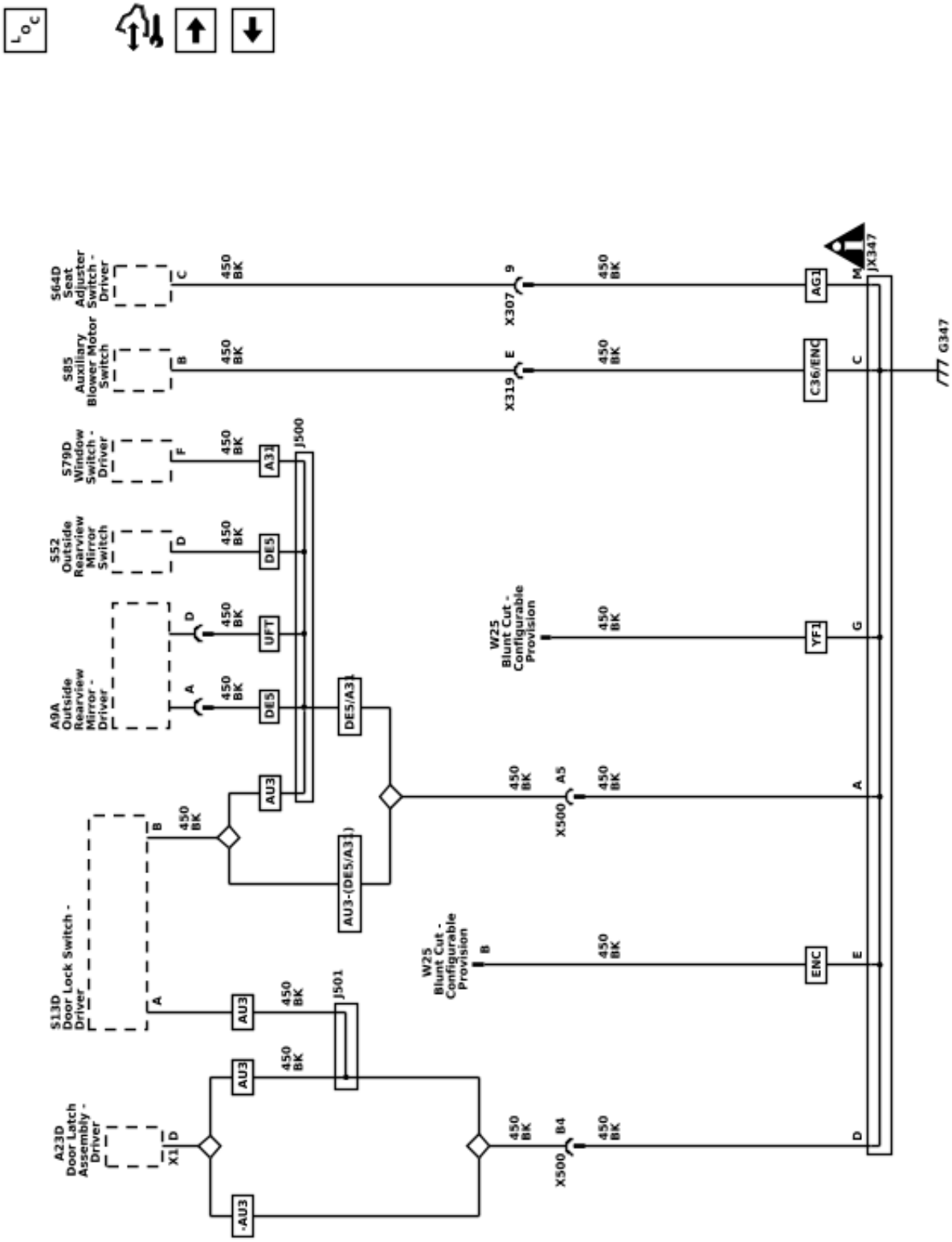

7085785

Ground Distribution Schematics (G348 - 1 of 2)

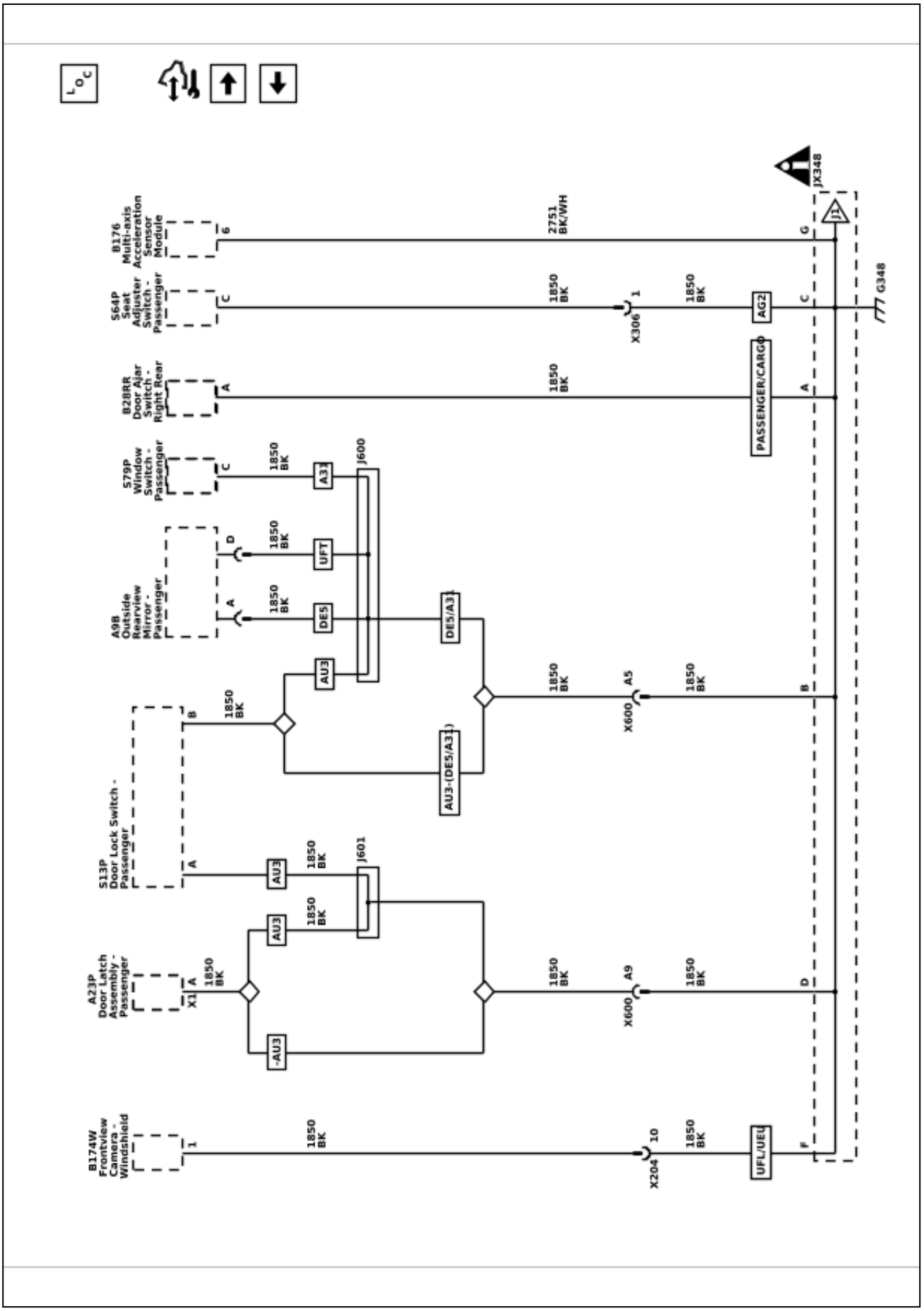

7085786

Ground Distribution Schematics (G348 - 2 of 2)

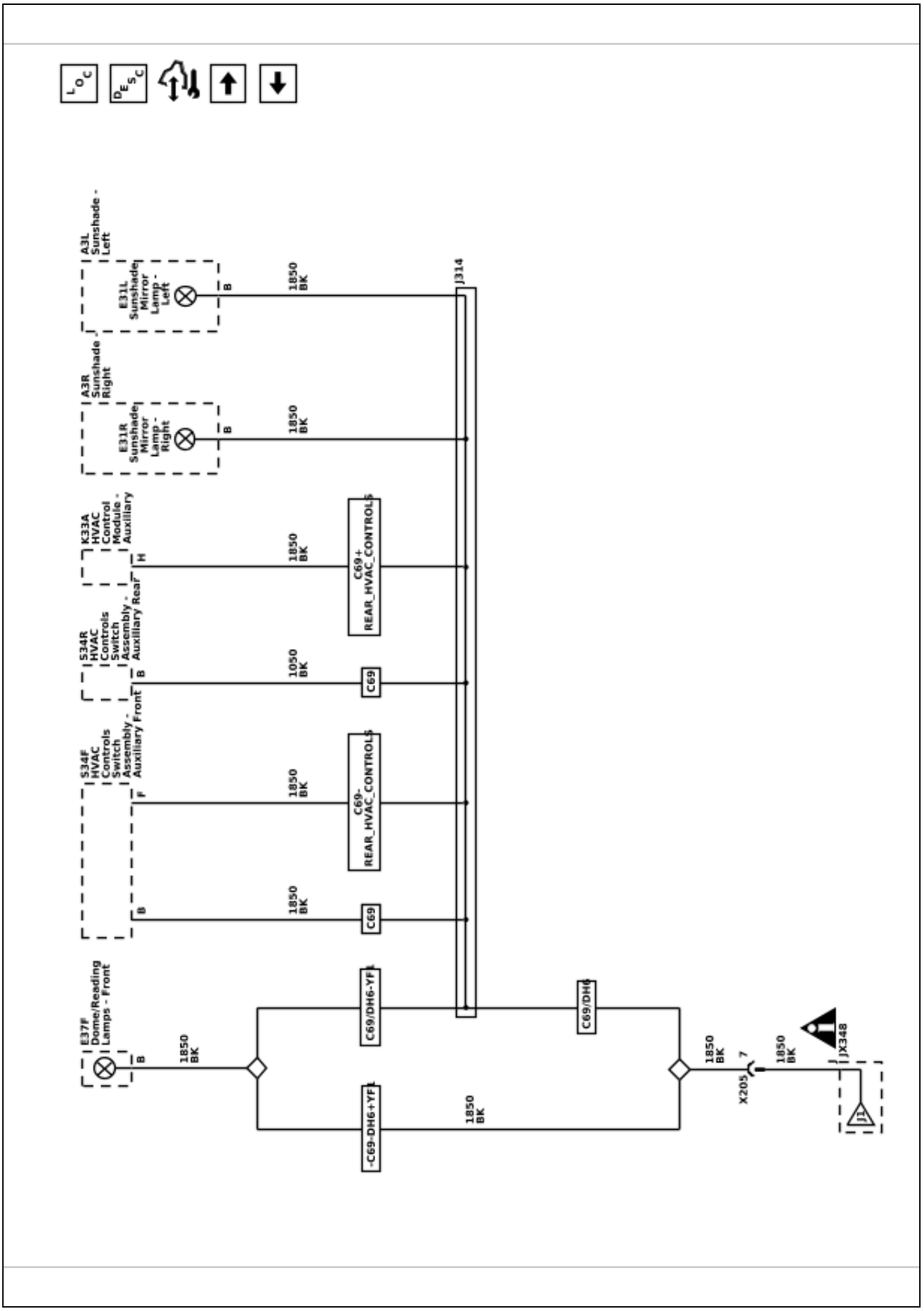

7085787

Ground Distribution Schematics (G401 - Passenger/Cargo)

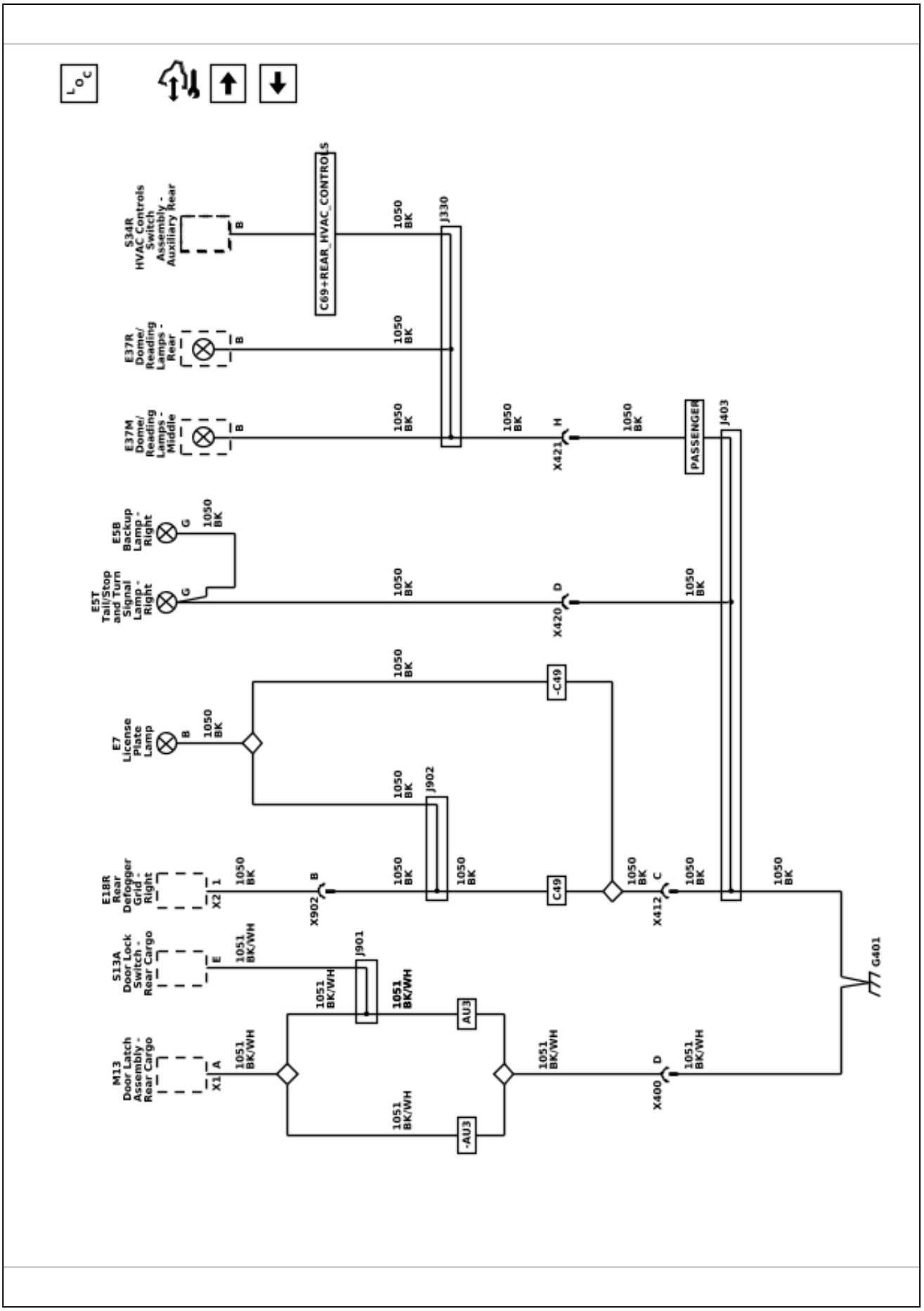

Ground Distribution Schematics (G402 - Passenger/Cargo)

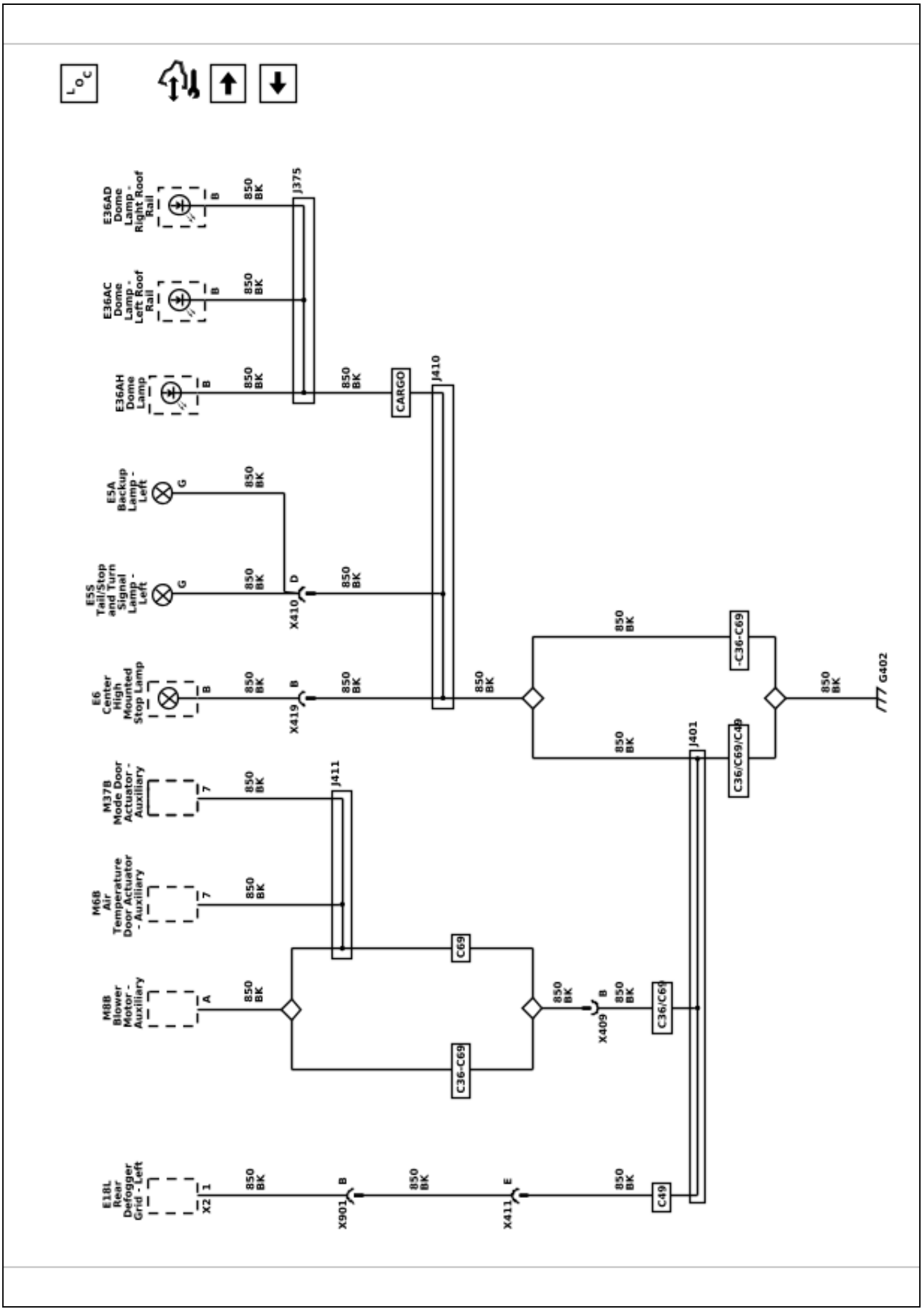

7085788

7085789

Ground Distribution Schematics (G404)

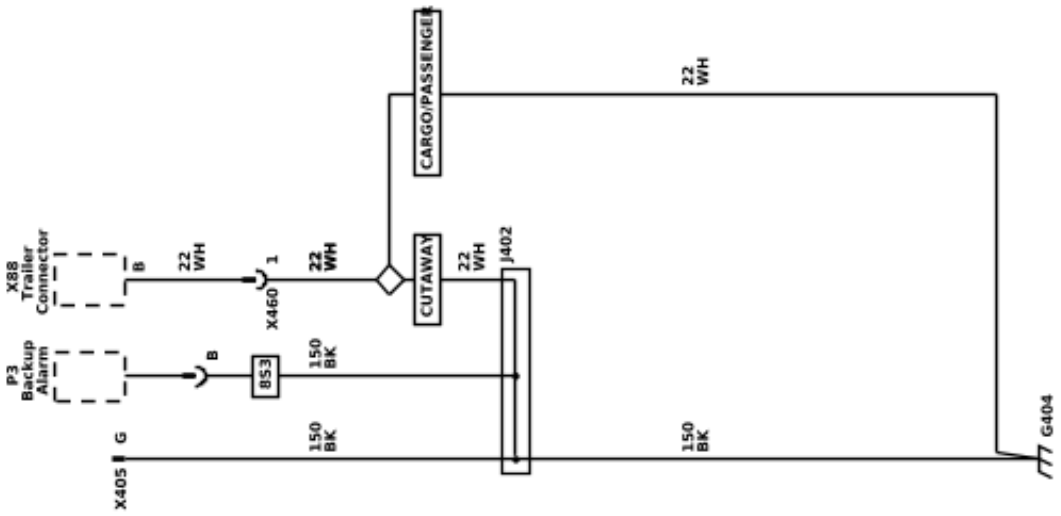

Upfitter Provision Schematics (Power, Ground, and Relay Controls)

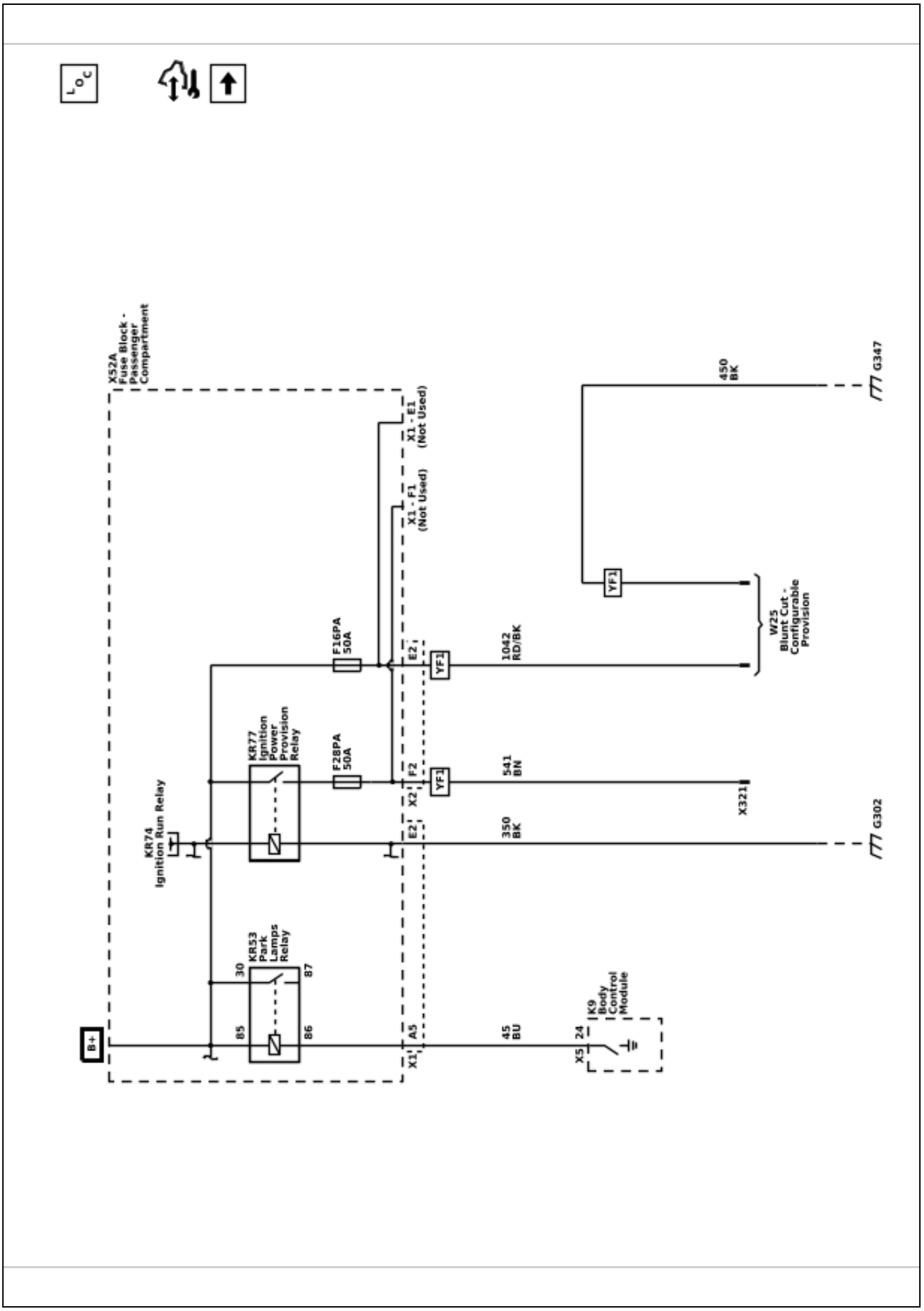

7085790

7085791

Upfitter Provision Schematics (Rear Heat Auxiliary (ENC))

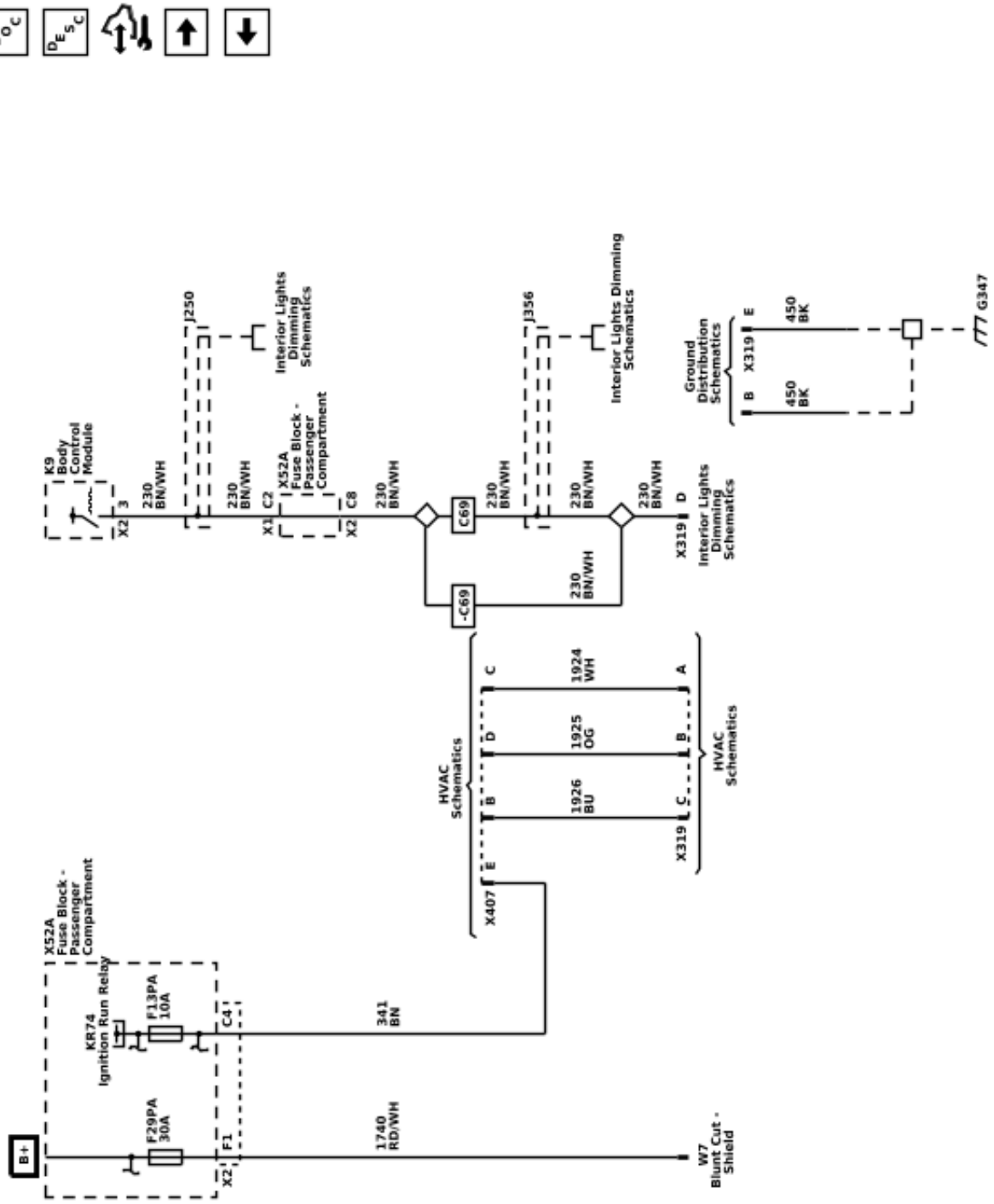

Upfitter Provision Schematics (Upfitter Fuse Block (9L7))

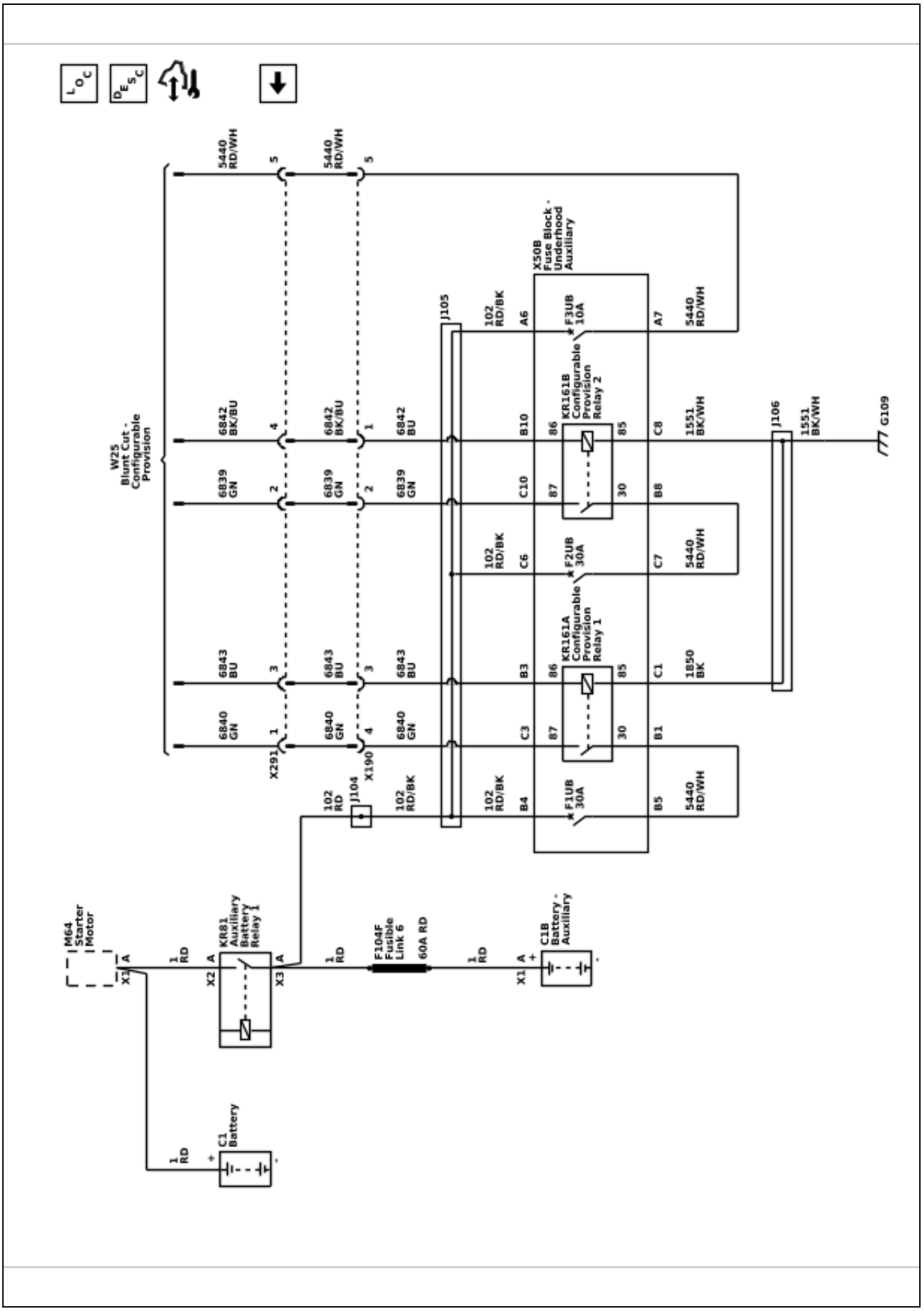

Component Locator

Master Electrical Component List

Master Electrical Component List

Code	Name	Option	Location	Locator View	Connector End View
A3L	Sunshade - Left	DH6	On the upper left of the headliner		
A3R	Sunshade - Right	DH6	On the upper right of the headliner		
A5	Driver Information Center	—	Integral to P16 Instrument Cluster	—	—
A7	Fuel Pump and Level Sensor Assembly	—	In the vehicle underbody, in the fuel tank	• •	
A9A	Outside Rearview Mirror - Driver	—	Attached to the exterior of the left front door		
A9B	Outside Rearview Mirror - Passenger	—	Attached to the exterior of the right front door		
A10	Inside Rearview Mirror	(UEU/UFL)/-(UEU/UFL)	In the passenger compartment, mounted at the top center of the windshield		• •
A11	Radio	—	In the center of the instrument panel		• • •
A23D	Door Latch Assembly - Driver	—	Towards the rear of the driver door		• •
A23P	Door Latch Assembly - Passenger	—	Towards the rear of the passenger door		• •
A91	Mirror Display	UVC	Internal to A10 Inside Rearview Mirror	—	—
B1	A/C Refrigerant Pressure Sensor	—	On the engine harness in the left rear side of the engine compartment		
B1B	A/C Low Side Pressure Switch	—	Right rear side of the engine compartment, on the side of the accumulator		
B5LF	Wheel Speed Sensor - Left Front	—	At the left front wheel		
B5LR	Wheel Speed Sensor - Left Rear	(R04)/(R05)	At the left rear wheel, attached to the backing plate	• • •	• •
B5RF	Wheel Speed Sensor - Right Front	—	At the right front wheel		
B5RR	Wheel Speed Sensor - Right Rear	(R04)/(R05)	At the right rear wheel, attached to the backing plate	• • •	• •
B9	Ambient Air Temperature Sensor	UFA	Attached to the front center of the radiator support		
B10	Ambient Light Sensor	—	On the top of the instrument panel		

Code	Name	Option	Location	Locator View	Connector End View
B12B	Transmission Fluid Pressure Sensor	—	Under the vehicle, center, within T12 Automatic Transmission Assembly	—	
B13	Transmission Fluid Temperature Sensor	—	Internal to T12 Automatic Transmission Assembly	—	
B14A	Transmission Output Shaft Speed Sensor	—	Internal to T12 Automatic Transmission Assembly		—
B14C	Transmission Input Shaft Speed Sensor	—	Internal to T12 Automatic Transmission Assembly	—	—
B14D	Transmission Intermediate Shaft Speed Sensor	—	Under the vehicle, internal to the Transmission Assembly	—	—
B19A	Brake Booster Fluid Pressure Alarm Switch	—	In the power steering inlet hose, near the power steering pump		
B20	Brake Fluid Level Switch	—	Left rear of the engine compartment, attached to the left lower side of the brake fluid reservoir		
B22	Brake Pedal Position Sensor	—	Attached to brake pedal assembly		
B23	Camshaft Position Sensor	—	Front of the engine between the water pump and the crank pulley	• • •	
B24	Mobile Telephone Microphone	—	In the passenger compart-ment, in the overhead console		
B26	Crankshaft Position Sensor	—	Attached to the lower right rear side of the engine, behind the starter	• •	
B28RR	Door Ajar Switch - Right Rear	—	Mounted towards the bottom of the right rear door		
B34	Engine Coolant Temperature Sensor	L8T/LV1	Attached to the engine coolant thermostat housing	• •	• •
B35	Engine Oil Level Switch	L8T/LV1	Attached to the left side of the oil pan	• • •	• •
B36	Engine Oil Temperature Sensor	—	In the engine compartment, near the left rear of the engine block		
B37B	Engine Oil Pressure Sensor	L8T/LV1	In engine compartment, on the rear lower left side of the engine	• •	• •
B46	Fuel Level Sensor	—	Under the vehicle, in the fuel tank		—
B47	Fuel Pressure Sensor	Cutaway/(-Cutaway)	Under the vehicle, near the fuel tank	• •	• •
B47B	Fuel Rail Pressure Sensor	—	In the engine compartment, on top of the engine, mounted to the rear of the right fuel rail	• •	

Code	Name	Option	Location	Locator View	Connector End View
B52C	Heated Oxygen Sensor - Bank 1 Sensor 1	—	Attached to the left front exhaust pipe, front of the catalytic converter	• •	
B52D	Heated Oxygen Sensor - Bank 1 Sensor 2	—	Attached to the left front exhaust pipe, back of the catalytic converter	• •	
B52E	Heated Oxygen Sensor - Bank 2 Sensor 1	—	Attached to the right front exhaust pipe, front of the catalytic converter	• •	
B52F	Heated Oxygen Sensor - Bank 2 Sensor 2	—	Attached to the right front exhaust pipe, rear of the catalytic converter	• •	
B55	Engine Hood Switch	BTV	In the center front of the engine compartment, attached to the hood latch assembly		
B59	Front Impact Sensor	—	On the lower center of the radiator support	• •	
B63LF	Side Impact Sensor - Left Front	—	In the left front side door	• •	
B63LR	Side Impact Sensor - Left Rear	—	In the left center of the vehicle behind the body panel trim	• •	
B63RF	Side Impact Sensor - Right Front	—	In the right front side door	—	
B63RR	Side Impact Sensor - Right Rear	—	In the lower right side of the vehicle near the rear side door	• •	
B68A	Knock Sensor 1	—	Mounted to the lower right side of the engine in-between the engine oil pan and the right bank exhaust manifold	• •	
B68B	Knock Sensor 2	—	Mounted to the lower left of the engine, in-between the engine oil filter and the left bank exhaust manifold	• •	
B74	Manifold Absolute Pressure Sensor	—	In the engine compartment, attached to the intake manifold, on top of the engine	• •	
B75C	Multifunction Intake Air Sensor	—	Right front of the engine compartment, mounted in the air cleaner duct		
B80	Park Brake Switch	—	Left lower side of the instrument panel on the brake pedal assembly	—	
B87	Rearview Camera	Cutaway/(-Cutaway)	On the right rear cargo door, in license plate trim		• •
B88D	Seat Belt Switch - Driver	—	Right side of the driver seat, inside Seat Belt Buckle — Driver	—	—
B99	Steering Wheel Angle Sensor	—	Attached the lower steering column jacket assembly		
B107	Accelerator Pedal Position Sensor	—	Left lower side of the instrument panel, above the accelerator pedal		

Code	Name	Option	Location	Locator View	Connector End View
B133	Brake Booster Fluid Flow Alarm Switch	—	In the power steering outlet hose, near the power steering pump		• •
B150	Fuel Tank Pressure Sensor	—	Attached to the top of the fuel sender assembly	• • • •	
B153D	Seat Belt Buckle - Driver	—	Right side of the driver seat		
B174W	Frontview Camera - Windshield	—	In the passenger compartment, mounted at the top center of the windshield		
B176	Multi-axis Acceleration Sensor Module	—	In the passenger compartment, on the front center on the floor board between the front seats		
B218L	Side Object Sensor Module - Left	UFT	At the rear of the vehicle, in the rear bumper, at the left corner		
B218R	Side Object Sensor Module - Right	UFT	At the rear of the vehicle, in the rear bumper, at the right corner		
B303	Transmission Range Sensor	—	Under the vehicle, center, within T12 Automatic Transmission Assembly	—	
B306E	Parking Assist Sensor - Rear Left Outer	UD7	At the rear of the vehicle, housed in the rear fascia		
B306F	Parking Assist Sensor - Rear Left Middle	UD7	At the rear of the vehicle, housed in the rear fascia		
B306G	Parking Assist Sensor - Rear Right Middle	UD7	At the rear of the vehicle, housed in the rear fascia		
B306H	Parking Assist Sensor - Rear Right Outer	UD7	At the rear of the vehicle, housed in the rear fascia		
C1	Battery	—	At the right front side of the engine compartment		• •
C1B	Battery - Auxiliary	—	Left frame rail, center of the vehicle		• •
E2LF	Side Marker Lamp - Left Front	—	In the left front corner of the vehicle		
E2RF	Side Marker Lamp - Right Front	—	In the right front corner of the vehicle		
E4E	Headlamp - Left High Beam	—	At the left front of the vehicle		
E4F	Headlamp - Right High Beam	—	At the right front of the vehicle		
E4G	Headlamp - Left Low Beam	—	At the left front of the vehicle		
E4H	Headlamp - Right Low Beam	—	At the right front of the vehicle		

Code	Name	Option	Location	Locator View	Connector End View
E4N	Park/Turn Signal Lamp - Left	—	In the left front corner of the vehicle		
E4P	Park/Turn Signal Lamp - Right	—	In the right front corner of the vehicle		
E5A	Backup Lamp - Left	—	Attached to the left tail lamp assembly		
E5B	Backup Lamp - Right	—	Attached to the right tail lamp assembly		
E5S	Tail/Stop and Turn Signal Lamp - Left	—	Attached to the left tail lamp assembly, upper bulb		
E5T	Tail/Stop and Turn Signal Lamp - Right	—	Attached to the right tail lamp assembly, upper bulb		
E6	Center High Mounted Stop Lamp	—	At the top rear center of the vehicle		
E7	License Plate Lamp	—	Attached to the outer right cargo door, above the license plate mount		
E18L	Rear Defogger Grid - Left	—	Attached to the left cargo door window		• •
E18R	Rear Defogger Grid - Right	—	Attached to the right cargo door window		• •
E31L	Sunshade Mirror Lamp - Left	—	On the upper left of the headliner, inside the Sunshade — Left		—
E31R	Sunshade Mirror Lamp - Right	—	On the upper right of the headliner, in the Sunshade — Right		—
E36AC	Dome Lamp - Left Roof Rail	—	In the rear of the roof panel	—	
E36AD	Dome Lamp - Right Roof Rail	—	In the rear of the roof panel	—	
E36AH	Dome Lamp	—	In the rear of the roof panel	—	
E37F	Dome/Reading Lamps - Front	—	In the front of the roof panel		
E37M	Dome/Reading Lamps - Middle	—	In the center of the roof panel		
E37R	Dome/Reading Lamps - Rear	—	In the rear of the roof panel		
F101	Passenger Instrument Panel Air Bag	—	Right side of the instrument panel		
F105LF	Roof Rail Air Bag - Left Front	—	Behind the left side of the headliner trim		
F105RF	Roof Rail Air Bag - Right Front	—	Behind the right side of the headliner trim		
F105RR	Roof Rail Air Bag - Right Rear	—	Behind the right rear side of the headliner trim		
F106D	Seat Side Air Bag - Driver	—	Within the driver seat back, towards the outside	—	
F106P	Seat Side Air Bag - Passenger	—	Within the passenger seat back, towards the outside	—	

Code	Name	Option	Location	Locator View	Connector End View
F107	Steering Wheel Air Bag	—	Attached to the center of the steering wheel		
F109D	Seat Belt Buckle Pretensioner - Driver	—	Part of the seat belt buckle		
F109P	Seat Belt Buckle Pretensioner - Passenger	—	Part of the seat belt buckle		
G12	Fuel Pump	—	Under the vehicle, internally attached to the middle of the fuel pump assembly	—	—
G13	Generator	K68/KG4/KW5	Attached to the right front of the engine	• •	• • • •
G18	High Pressure Fuel Pump	LV1/L8T	In the engine compartment, at the top rear of the engine, between the cylinder heads	• •	• •
G24	Windshield Washer Pump	—	Attached to the windshield washer fluid reservoir in the right front of the engine compartment		
K9	Body Control Module	—	Lower right side of the instrument panel behind the knee bolster		• • • • • • •
K17	Electronic Brake Control Module	—	Attached to the left frame rail, near the center of the vehicle	• •	
K18	Compass Module	—	In the front of the headliner		
K20	Engine Control Module	LV1/L8T	At the left front side of the engine compartment, near the underhood fuse block on the inner left front fender		• • • • • •
K33A	HVAC Control Module - Auxiliary	—	In the front of the headliner		
K36	Inflatable Restraint Sensing and Diagnostic Module	—	Below the driver seat under the carpet on the floor board		• •
K64	Content Theft Deterrent Control Module	—	In the steering column around the ignition key cylinder housing		
K71	Transmission Control Module	—	On the Right side of the engine compartment		

Code	Name	Option	Location	Locator View	Connector End View
K73	Telematics Communication Interface Control Module	—	In the passenger compartment, mounted on a bracket under driver knee bolster panel		• • • •
K77	Remote Control Door Lock Receiver	—	Attached to the upper left side of the instrument panel carrier, above the instrument panel cluster (IPC)		
K111	Fuel Pump Driver Control Module	—	Under the vehicle, attached to the left frame rail, approximately midpoint of vehicle	• •	
K182	Parking Assist Control Module	—	In the passenger compartment, mounted within the instrument panel on the right side if the steering column		• •
M6	Air Temperature Door Actuator	—	Lower right side of the instrument panel, attached to the HVAC module		
M6B	Air Temperature Door Actuator - Auxiliary	—	In the left rear of the passenger compartment, attached to the auxiliary HVAC module	• •	
M7	Transmission Shift Lock Control Solenoid Actuator	—	Attached to the right side of the steering column		
M8	Blower Motor	—	Right rear of the engine compartment, attached to the evaporator case	—	
M8B	Blower Motor - Auxiliary	—	In the left rear of the passenger compartment, attached to the auxiliary HVAC module	—	
M13	Door Latch Assembly - Rear Cargo	—	Attached to the right cargo door latch, in the right cargo door		• •
M14RR	Door Lock Actuator - Right Rear	E24/YA2	Attached to the right rear door latch, in the right rear door	• •	• •
M37B	Mode Door Actuator - Auxiliary	—	In the left rear of the passenger compartment, attached to the auxiliary HVAC module		
M49D	Seat Motor Assembly - Driver	—	Below the left front seat, attached to the seat frame		
M49P	Seat Motor Assembly - Passenger	—	Below the right front seat, attached to the seat frame		
M64	Starter Motor	L8T/LV1	Attached to the lower right rear of the engine	—	• • •
M74D	Window Motor - Driver	—	Attached to the interior of the left front door		
M74P	Window Motor - Passenger	—	Attached to the interior of the right front door		

Code	Name	Option	Location	Locator View	Connector End View
M75	Windshield Wiper Motor	—	In the left side of the cowl, near the engine compartment		
P3	Backup Alarm	UYZ/(-UYZ)	In the rear of the vehicle on the frame		• •
P13	Horn Assembly	—	In the left front engine compartment behind the left headlamp		
P16	Instrument Cluster	—	Attached to the left side of the instrument panel		
P19AG	Speaker - Left Front Door	—	Attached to the left front door		
P19AH	Speaker - Right Front Door	—	Attached to the right front door		
P19F	Speaker - Left Rear Cargo Door	—	Attached to the left cargo door		
P19LR	Speaker - Left Rear Roof	—	In the left rear headliner of the vehicle		
P19RR	Speaker - Right Rear Roof	—	In the right rear upper headliner of the vehicle		
P19T	Speaker - Right Rear Cargo Door	—	Attached to the right cargo door		
P34D	Side Object Detection Indicator - Driver	—	Internal to the outside rearview mirror - driver	—	—
P34P	Side Object Detection Indicator - Passenger	—	Internal to the outside rearview mirror - passenger	—	—
P43	Collision Alert Indicators	—	Within the instrument cluster		
Q2	A/C Compressor Clutch	—	On the front of the A/C compressor lower right front of engine	• •	
Q6	Camshaft Position Actuator Solenoid Valve	—	Front of the engine behind the center of the water pump	• • •	
Q12	Evaporative Emission Purge Solenoid Valve	—	On the top of the engine, rear of the throttle body	• •	
Q13	Evaporative Emission Vent Solenoid Valve	—	Attached to the side of the EVAP canister, front of the fuel tank	• •	
Q17A	Fuel Injector 1	—	On the left side of the intake manifold, at the #1 cylinder intake port	• •	
Q17B	Fuel Injector 2	—	On the right side of the intake manifold, at the #2 cylinder intake port	• •	
Q17C	Fuel Injector 3	—	On the left side of the intake manifold, at the #3 cylinder intake port	• •	
Q17D	Fuel Injector 4	—	On the right side of the intake manifold, at the #4 cylinder intake port	• •	

Code	Name	Option	Location	Locator View	Connector End View
Q17E	Fuel Injector 5	—	On the left side of the intake manifold, at the #5 cylinder intake port	• •	
Q17F	Fuel Injector 6	—	On the right side of the intake manifold, at the #6 cylinder intake port	• •	
Q17G	Fuel Injector 7	—	On the left side of the intake manifold, at the #7 cylinder intake port		
Q17H	Fuel Injector 8	—	On the right side of the intake manifold, at the #8 cylinder intake port		
Q38	Throttle Body	—	Attached to the center front of the intake manifold	• •	
Q44	Engine Oil Pressure Control Solenoid Valve	—	In the engine compartment, at the front of the engine, behind the front cover		
Q77A	Transmission Control Solenoid Valve 1	MTH/N8X	Under the vehicle, internal to the Transmission Assembly	—	
Q77B	Transmission Control Solenoid Valve 2	MTH/N8X	Under the vehicle, internal to the Transmission Assembly	—	
Q77C	Transmission Control Solenoid Valve 3	MTH/N8X	Under the vehicle, internal to the Transmission Assembly	—	
Q77D	Transmission Control Solenoid Valve 4	MTH/N8X	Under the vehicle, internal to the Transmission Assembly	—	
Q77E	Transmission Control Solenoid Valve 5	MTH/N8X	Under the vehicle, internal to the Transmission Assembly	—	
Q77F	Transmission Control Solenoid Valve 6	MTH/N8X	Under the vehicle, internal to the Transmission Assembly	—	
Q77G	Transmission Control Solenoid Valve 7	MTH/N8X	Under the vehicle, internal to the Transmission Assembly	—	
Q77H	Transmission Control Solenoid Valve 8	MTH/N8X	Under the vehicle, internal to the Transmission Assembly	—	
Q77J	Transmission Control Solenoid Valve 9	MTH/N8X	Under the vehicle, internal to the Transmission Assembly	—	
R3	Blower Motor Resistor	—	Right rear of the engine compartment		
R3B	Blower Motor Resistor - Auxiliary	C36/C69	In the left rear of the passenger compartment, attached to the auxiliary HVAC module		
R6A	Terminating Resistor - High Speed Bus	—	In the engine compartment	• •	
S2	Transmission Manual Shift Switch	—	Mounted on the shift lever, extending from the right side of the steering column	—	
S13A	Door Lock Switch - Rear Cargo	—	Attached to the right cargo door accessory mount plate		

Code	Name	Option	Location	Locator View	Connector End View
S13D	Door Lock Switch - Driver	AU3	Attached to the left front door accessory mount plate		
S13P	Door Lock Switch - Passenger	AU3	Attached to the right front door accessory mount plate		
S16	Driver Information Center Switch	—	On the dash, just to the left of P16 Instrument Cluster		
S30	Headlamp Switch	—	At the left side of the instrument panel		
S33	Horn Switch	—	Inside the upper steering column, behind the inflatable restraint steering wheel module		
S34	HVAC Controls Switch Assembly	—	In the center of the instrument panel		• • • •
S34F	HVAC Controls Switch Assembly - Auxiliary Front	—	On the front of the overhead console		• •
S34R	HVAC Controls Switch Assembly - Auxiliary Rear	—	In the headliner, near the center of the vehicle		
S39	Ignition Switch	—	On the right side of the steering column		
S40	Passenger Air Bag Disable Switch	—	In the center of the instrument panel		
S51	Telematics Button Assembly	—	In the center of the instrument panel, just below the radio		
S52	Outside Rearview Mirror Switch	DE5	Attached to the left front door accessory mount plate		
S64D	Seat Adjuster Switch - Driver	AG1	Attached to the front panel of the driver seat		
S64P	Seat Adjuster Switch - Passenger	AG2	Attached to the front panel of the front passenger seat		
S70L	Steering Wheel Controls Switch - Left	K34	On the left steering wheel spoke	—	
S70R	Steering Wheel Controls Switch - Right	W1Y	On the right steering wheel spoke	—	
S74	Tow/Haul Mode Switch	—	In the center of the instrument panel		
S75	Traction Control Switch	—	In the center of the instrument panel		
S78	Turn Signal/ Multifunction Switch	—	On the left side of the steering column		• • •
S79D	Window Switch - Driver	A31	Attached to the left front door accessory mount plate		
S79P	Window Switch - Passenger	A31	Attached to the right front door accessory mount plate		

Code	Name	Option	Location	Locator View	Connector End View
S85	Auxiliary Blower Motor Switch	C36	In the center of the instrument panel	—	
S155	Lane Departure Warning Switch	—	Near the center of the instrument panel, below the radio		
T1	Accessory DC/AC Power Inverter Module	—	Attached to the Instrument Panel Harness		
T2RF	Antenna - Roof Front	—	Mounted on roof, centered on vehicle above front windshield	—	
T4M	Radio Antenna	—	Mounted on top of the right front fender, adjacent to the hood		
T4S	Wireless Communication Antenna - Bluetooth	—	Internal to K73 Telematics Communication Interface Control Module	—	—
T8A	Ignition Coil 1	—	On the left rocker cover center at cylinder 1	• •	
T8B	Ignition Coil 2	—	On the right rocker cover center at cylinder 2	• •	
T8C	Ignition Coil 3	—	On the left rocker cover center at cylinder 3	• •	
T8D	Ignition Coil 4	—	On the right rocker cover center at cylinder 4	• •	
T8E	Ignition Coil 5	—	On the left rocker cover center at cylinder 5	• •	
T8F	Ignition Coil 6	—	On the right rocker cover center at cylinder 6	• •	
T8G	Ignition Coil 7	—	On the left rocker cover rear at cylinder 7		
T8H	Ignition Coil 8	—	On the right rocker cover rear at cylinder 8		
T12	Automatic Transmission Assembly	—	Under the vehicle attached to the rear of the engine		—
W8	Blunt Cut - Trailer Provision	—	Behind the instrument panel, near the steering column	• •	—
W12	Blunt Cut - Emergency Vehicle Provision	—	Near the instrument panel	—	—
W22	Blunt Cut - Rear Speaker Provision	—	Near the instrument panel		—
W25	Blunt Cut - Configurable Provision	—	Near the instrument panel	—	—
X50A	Fuse Block - Underhood	—	In the engine compartment, attached to the left front fender		*Electrical Center Identification Views 5-16*
X50B	Fuse Block - Underhood Auxiliary	—	In the engine compartment		*Electrical Center Identification Views 5-16*

Code	Name	Option	Location	Locator View	Connector End View
X52A	Fuse Block - Passenger Compartment	—	Below the driver seat		*Electrical Center Identification Views 5-16*
X55U	Fuse Holder - Starter	—	In the engine compartment, passenger side, near the battery		*Electrical Center Identification Views 5-16*
X80A	Accessory Power Receptacle - Center Console 1	—	In the center of the instrument panel		
X80B	Accessory Power Receptacle - Center Console 2	—	In the right center of the instrument panel		
X81	Accessory Power Receptacle - 110V AC	KI4	Within the passenger compartment		• •
X84	Data Link Connector	—	Left lower side of the instrument panel, near the park brake pedal assembly		
X85	Steering Wheel Air Bag Coil	—	Inside the upper steering column		• • •
X87RB	Sliding Door Jamb Contact Plate - Right Body	—	Attached to the right B-pillar	• • •	• •
X88	Trailer Connector	UY7	Below the rear bumper, near the center		
X100	Instrument Panel Wiring Harness to Engine Wiring Harness	—	Left rear of the engine compartment near the underhood fuse block and the horn	• • •	
X101	Engine Wiring Harness to Chassis Wiring Harness	—	Left rear of the engine compartment behind the underhood fuse block	• • • • • •	
X102	Chassis Wiring Harness to Fuel Tank Wiring Harness	—	Under the vehicle, near the fuel tank	• • • • •	
X103	Engine Wiring Harness to Starter Motor Jumper Wiring Harness	—	In the engine compartment, right rear of engine block, near the starter	• •	
X104	Instrument Panel Wiring Harness to Front Seat Wiring Harness	—	Instrument Panel wiring harness to Front Seat Wiring Harness, bottom left side of the radiator support		
X130	Engine Wiring Harness to Camshaft Position Sensor Wire	—	In the engine compartment, on the left rear side of engine block	• • •	

Code	Name	Option	Location	Locator View	Connector End View
X135	Camshaft Position Sensor Wire to Oil Pump Flow Control Solenoid Valve Wire	L8T	In the engine compartment, on the left rear side of engine block	• •	
X141	Instrument Panel Wiring Harness to Brake Fluid Level Indicator Wiring Harness	UJ1	Instrument panel wiring harness to the brake fluid alarm switch jumper wiring harness, left rear of the engine compartment near the cowl	• •	
X150	Instrument Panel Wiring Harness to Forward Lamp Wiring Harness	—	Instrument panel wiring harness to the forward lamp wiring harness, near the upper radiator hose at the radiator entry point		
X155	Engine Wiring Harness to Engine Coolant Temperature Sensor Harness	L8T	Engine wiring harness to Engine Oil Pressure Sensor Jumper wiring harness, in the engine compartment, left front of the engine, near the power steering pump		
X160	Engine Wiring Harness to Fuel Injector Wiring Harness	LV1/L8T	In the engine compartment, rear of the engine near the top center	• • •	• •
X161	Engine Wiring Harness to Fuel Injector Wiring Harness	LV1/L8T	In the engine compartment, rear of the engine near the top right	• • •	• •
X175	Engine Wiring Harness to Automatic Transmission Wiring Harness	LV1/L8T	Engine wiring harness to the transmission jumper wiring harness		
X176	Automatic Transmission Wiring Harness to Automatic Transmission Wiring Harness	MTH/N8X	Internal to the transmission	—	
X178	Automatic Transmission Wiring Harness to Automatic Transmission Output Speed Sensor Wiring Harness	MTH/N8X	Transmission wiring harness to the transmission speed sensor wiring harness	—	
X185	Instrument Panel Wiring Harness to Chassis Wiring Harness	—	In the engine compartment, near the X50A fuse block - underhood	• • • • •	
X190	Accessory Wiring Harness to Accessory Power Fuse Block Rear Wiring Harness Extension Harness	9L7	In the engine compartment		

Code	Name	Option	Location	Locator View	Connector End View
X200	Steering Wheel Air Bag Coil Jumper Wiring Harness to Instrument Panel Wiring Harness	—	Steering column wiring harness to the instrument panel wiring harness, at the base of the steering column	• •	
X202	Instrument Panel Wiring Harness to Engine Wiring Harness	—	Instrument panel wiring harness to engine wiring harness, about 8.8 inches (225 mm) from I/P underhood break out after pass through grommet	• •	
X204	Body Wiring Harness to Roof Console Wiring Harness	—	Body wiring harness to headliner wiring harness,	• •	
X205	Roof Console Wiring Harness to Body Wiring Harness	—	Front headliner wiring harness to the body wiring harness, behind the A-pillar	• •	
X206	Instrument Panel Wiring Harness to Instrument Panel Wiring Harness	—	Instrument Panel wiring harness to Instrument Panel wiring harness, left side of the instrument panel near the headlamp switch		
X220	Instrument Panel Wiring Harness to Park Brake Switch Jumper Wiring Harness	—	Instrument panel wiring harness to the parking brake jumper wiring harness, left side of the instrument panel, center of the parking brake pedal assembly		
X221	Instrument Panel Wiring Harness to Antenna Wiring Harness	—	Instrument Panel Wiring Harness to Antenna Wiring Harness, behind the passenger kick panel		
X225	Accelerator Control Wiring Harness to Instrument Panel Wiring Harness	—	Accelerator Pedal Position (APP) Jumper wiring harness to Instrument Panel wiring harness, located between Accelerator Pedal Position (APP) sensor and Instrument Panel wiring harness		
X291	Accessory Power Fuse Block Rear Wiring Harness Extension Harness to Accessory Power Fuse Block Rear Wiring Harness Extension Harness	9L7	In the engine compartment		
X306	Body Wiring Harness to Seat Wiring Harness - Passenger	—	Body wiring harness to the front passenger seat wiring harness, right side of the passenger compartment below the passenger seat	• • •	
X307	Body Wiring Harness to Seat Wiring Harness - Driver	—	Body wiring harness to the driver seat wiring harness, left side of the passenger compartment below the driver seat	• • • •	

Code	Name	Option	Location	Locator View	Connector End View
X318	Instrument Panel Wiring Harness to Body Wiring Harness	—	Instrument panel wiring harness to the body wiring harness, behind the left kick panel	• • • •	
X319	Auxiliary Heater Front Wiring Harness to Body Wiring Harness	ENC/C69/C36	Rear heater switch wiring harness to the body wiring harness, behind the left kick panel	• • •	
X323	Airbag Wiring Harness to Body Wiring Harness	ASF	At the base of the left C-pillar		
X324	Airbag Wiring Harness to Body Wiring Harness	ASF	At the base of the right C-pillar		
X329	Instrument Panel Wiring Harness to Body Wiring Harness	UVC	Instrument panel wiring harness to the body wiring harness, in the passenger compartment under the driver seat	• • • •	
X330	Instrument Panel Wiring Harness to Body Wiring Harness	—	Instrument panel wiring harness to the body wiring harness, under the driver seat	• • • •	
X331	Instrument Panel Wiring Harness to Body Wiring Harness	—	Instrument panel wiring harness to the body wiring harness, under the driver seat	• • • •	
X400	Rear Door Door Wiring Harness to Body Wiring Harness	Passenger/ Cargo	Right cargo door wiring harness to the body wiring harness, right rear of the passenger compartment center of the right D-pillar	• • •	
X403	Rear Door Door Wiring Harness to Body Wiring Harness	—	Rear cargo door wiring harness to body wiring harness,	• • • • •	• • • •
X405	Chassis Rear Wiring Harness Extension Harness to Chassis Rear Wiring Harness Extension Harness - Cutaway	Cutaway/UY7	Cutaway rear lighting connector to the chassis wiring harness, left rear frame rail	• •	• •
X407	Auxiliary Heater and Air Conditioning Wiring Harness to Body Wiring Harness	—	Rear HVAC wiring harness to the body wiring harness, left rear of the passenger compartment upper back side of the auxiliary HVAC module at the D-pillar	• • • •	
X408	Rear Object Alarm Sensor Wiring Harness to Chassis Wiring Harness	—	Rear bumper wiring harness to chassis wiring harness,	• • •	

Code	Name	Option	Location	Locator View	Connector End View
X409	Auxiliary Heater and Air Conditioning Wiring Harness to Body Wiring Harness	—	Rear HVAC wiring harness to the body wiring harness, left rear of the passenger compartment upper back side of the auxiliary HVAC module at the D-pillar	—	
X410	Tail Lamp Wiring Harness to Body Wiring Harness	Passenger/ Cargo	Left Tail Lamp Assembly wiring harness to Body wiring harness, left rear of the passenger compartment at the D-pillar	• •	
X411	Rear Door Door Wiring Harness - Left to Body Wiring Harness	Passenger/ Cargo	Left cargo door wiring harness to the body wiring harness, left rear of the passenger compartment center of the left D-pillar	• • •	
X412	Rear Door Door Wiring Harness to Body Wiring Harness	Passenger/ Cargo	Right cargo door wiring harness to the body wiring harness, right rear of the passenger compartment center of the right D-pillar	• • •	
X415	Radio Rear Speaker Wiring Harness to Body Wiring Harness	Passenger/ Cargo	Rear overhead speakers jumper wiring harness to the body wiring harness, rear of the passenger compartment center of the rear roof rail	• •	
X419	Front Side Door Door Wiring Harness - Driver to Body Wiring Harness	Passenger/ Cargo	CHMSL wiring harness to the body wiring harness, rear of the passenger compartment center of the rear roof rail	• •	
X420	Tail Lamp Wiring Harness to Body Wiring Harness	Passenger/ Cargo	Right Tail Lamp Assembly wiring harness to Body wiring harness, right rear of the passenger compartment at the D-pillar	• •	
X421	Roof Console Wiring Harness to Body Wiring Harness	—	Body wiring harness to rear headliner wiring harness	• •	
X450	Trailer Jumper Wiring Harness to Chassis Wiring Harness	NE7	Trailer Jumper Wiring Harness to Chassis Wiring Harness, at the rear of the vehicle	—	
X460	Chassis Wiring Harness to Chassis Wiring Harness	—	Trailer Provision to Chassis wiring harness, in rear near Trailer wiring harness		
X500	Front Side Door Door Wiring Harness - Driver to Body Wiring Harness	—	Driver door wiring harness to the body wiring harness, behind the left kick panel	• • • •	
X501	Airbag Wiring Harness to Front Side Door Door Wiring Harness - Driver	ASF	Driver side impact sensor wiring harness to the driver door wiring harness, in the driver door behind the trim panel		

Code	Name	Option	Location	Locator View	Connector End View
X600	Front Side Door Door Wiring Harness - Passenger to Body Wiring Harness	—	Passenger door wiring harness to the body wiring harness, behind the right kick panel	• •	
X601	Side Impact Sensor - Right Front Jumper Wiring Harness to Front Side Door Door Wiring Harness - Passenger	ASF	Passenger side impact sensor wiring harness to the passenger door wiring harness, in the passenger door behind the trim panel		
X901	Rear Window Defogger Wiring Harness to Rear Door Door Wiring Harness - Left	C49	Rear window defogger jumper wiring harness to the left cargo door wiring harness, in the left cargo door		
X902	Rear Window Defogger Wiring Harness to Rear Door Door Wiring Harness	C49	Rear window defogger jumper wiring harness to the right cargo door wiring harness, in the right cargo door		
G100	Forward Lamp Wiring Harness	—	Left front of the engine compartment, attached to the front of the left fender		—
G101	Forward Lamp Wiring Harness	—	Right front of the engine compartment, attached near the front of the right fender		—
G102	Engine Wiring Harness	—	Rear of the engine compartment, left rear of the engine on the left cylinder head	• •	—
G103	Engine Wiring Harness	—	Rear of the engine compartment, left rear of the engine on the left cylinder head	• •	—
G104	Negative Battery Cable	—	Mounted on the engine, extending towards the battery	• •	—
G105	Negative Battery Cable	—	Front of the engine compartment, right front of the inner frame rail		—
G106	Negative Battery Cable	—	Front of the engine compartment, right front fender		—
G107	Engine Wiring Harness	LV1	Rear of the engine compartment, right rear of the engine on the right cylinder head		—
G108	Engine Wiring Harness	—	Rear of the engine compartment, left rear of the engine on the left cylinder head		—
G109	Accessory Wiring Harness	9L7	In the engine compartment, passenger side, attached to the inner fender		—
G300	Chassis Wiring Harness	—	Left side outer frame, rear of the front tire, near the body mount		—

Code	Name	Option	Location	Locator View	Connector End View
G301	Instrument Panel Wiring Harness	—	Left front of the passenger compartment, behind the kick panel next to G302		—
G302	Instrument Panel Wiring Harness	—	Left front of the passenger compartment, behind the kick panel next to G301		—
G304	Instrument Panel Wiring Harness	—	Right front of the passenger compartment, behind the kick panel		—
G305	Auxiliary Battery Negative Cable	TP3	Left center outer frame rail, near the auxiliary battery		—
G347	Body Wiring Harness	—	Left side of the passenger compartment, lower left B-pillar part of JX347	—	—
G348	Body Wiring Harness	—	Right side of the passenger compartment, lower right B-pillar part of JX348	—	—
G401	Body Wiring Harness	Passenger/ Cargo	Right rear of the passenger compartment, upper right D-pillar		—
G402	Body Wiring Harness	Passenger/ Cargo	Left rear of the passenger compartment, center left D-pillar		—
G404	Chassis Wiring Harness	—	In vehicle underbody, near center, on left frame rail	• •	—
J100	Forward Lamp Wiring Harness	—	At the left front of the engine compartment, just behind the left front headlamp assembly		—
J101	Engine Wiring Harness	—	In the engine wiring harness, on the right side of the engine, approximately 5 cm (2 inches) from the MAP sensor breakout	• •	—
J102	Engine Wiring Harness	—	In the engine wiring harness, on the right side of the engine, approximately 6 cm (2 inches) from the MAP sensor breakout	• •	—
J104	Fuse Block Jumper Wiring Harness	9L7	In the fuse block jumper wiring harness, approximately 84.0 cm (33.07 inches) from the fuse block - underhood auxiliary		—
J105	Fuse Block Jumper Wiring Harness	9L7	In the fuse block jumper wiring harness, approximately 54.0 cm (21.26 inches) from the fuse block - underhood auxiliary		—
J106	Fuse Block Jumper Wiring Harness	9L7	In the fuse block jumper wiring harness, approximately 36.5 cm (14.37 inches) from the fuse block - underhood auxiliary		—
J107	Engine Wiring Harness	—	In the engine wiring harness, approximately 11.5 cm (4.53 inches) from the horn assembly breakout	• •	—

Code	Name	Option	Location	Locator View	Connector End View
J108	Engine Wiring Harness	L8T	In the engine wiring harness, approximately 10.5 cm (4.0 inches) from the engine control module breakout		—
J110	Forward Lamp Wiring Harness	—	In the forward lamp wiring harness, Left front of the vehicle, approximately 12 cm (5 inches) from the left headlamp connector breakout		—
J111	Engine Wiring Harness	L8T	In the engine wiring harness, approximately 5.0 cm (2.0 inches) from the brake fluid level switch breakout		—
J112	Engine Wiring Harness	—	In the engine wiring harness, approximately 33.5 cm (13.2 inches) from the multifunction intake air sensor breakout	• •	—
J115	Engine Wiring Harness	—	In the engine wiring harness, in the right front of the engine compartment, approximately 15 cm (6 inches) from the X101 breakout	• •	—
J121	Forward Lamp Wiring Harness	—	In the forward lamp wiring harness, near the front center of the vehicle, approximately 48 cm (19 inches) from the left headlamp breakout		—
J122	Forward Lamp Wiring Harness	—	In the forward lamp wiring harness, near the left front of the vehicle, approximately 12 cm (5 inches) from the underhood fuse block X4 breakout		—
J130	Engine Wiring Harness	—	In the engine wiring harness, approximately 12.5 cm (4.9 inches) from the knock sensor 1 breakout	• •	—
J131	Engine Wiring Harness	—	In the engine wiring harness, approximately 19.5 cm (7.7 inches) from the knock sensor 1 breakout	• •	—
J143	Engine Wiring Harness	—	Adjacent to B52C Heated Oxygen Sensor - Bank 1 Sensor 1 and B52E Heated Oxygen Sensor - Bank 2 Sensor 1	• •	—
J144	Engine Wiring Harness	—	Adjacent to B52D Heated Oxygen Sensor - Bank 1 Sensor 2 and B52F Heated Oxygen Sensor - Bank 2 Sensor 2	• •	—
J170	Engine Wiring Harness	LV1	In the engine wiring harness, approximately 24.5 cm (9.6 inches) from ignition coil 5		—

Code	Name	Option	Location	Locator View	Connector End View
J171	Engine Wiring Harness	LV1	In the engine wiring harness, approximately 26 cm (10.2 inches) from ignition coil 6		—
J175	Transmission Internal Wiring Harness	—	Within the automatic transmission assembly	—	—
J176	Transmission Internal Wiring Harness	—	Within the automatic transmission assembly	—	—
J177	Transmission Internal Wiring Harness	—	Within the automatic transmission assembly	—	—
J181	Ignition Coil Jumper Wiring Harness	L8T	In the ignition coil jumper wiring harness for bank 1, approximately 5 cm (2.0 inches) from the X126 breakout		—
J182	Left Ignition Coil Wiring Harness	—	In the odd ignition/coil module jumper wiring harness, top left of the engine	• •	—
J183	Right Ignition Coil Wiring Harness	L8T	In the even ignition/coil module jumper wiring harness, top right of the engine		—
J184	Left Ignition Coil Wiring Harness	LV1	In the odd ignition/coil module jumper wiring harness, top left of the engine		—
J185	Right Ignition Coil Wiring Harness	LV1	In the even ignition/coil module jumper wiring harness, top right of the engine		—
J188	Right Ignition Coil Wiring Harness	—	In the even ignition/coil module jumper wiring harness, top right of the engine	• •	—
J201	Instrument Panel Wiring Harness	UFL	In the instrument panel harness, approximately 2 cm (0.79 inches) from the park brake switch breakout		—
J202	Steering Column Wiring Harness	—	In the steering column wiring harness, approximately 25 cm (9 inches) from the X200 connector	—	—
J203	Steering Column Wiring Harness	—	In the steering column wiring harness, approximately 27 cm (10.5 inches) from the X200 connector	—	—
J205	Steering Column Wiring Harness	—	In the steering column wiring harness, approximately 30 cm (12 inches) from the X200 connector	—	—

Code	Name	Option	Location	Locator View	Connector End View
J207	Instrument Panel Wiring Harness	—	In the instrument panel harness, center of the instrument panel, approximately 70 cm (27 inches) from the radio and HVAC control assembly breakout		—
J208	Steering Wheel Wiring Harness	K34 + W1Y	In the steering wheel wiring harness, near the X200 connector	—	—
J209	Steering Wheel Wiring Harness	K34 + W1Y	In the steering wheel wiring harness, near the X200 connector	—	—
J210	Steering Wheel Wiring Harness	K34/W1Y	In the steering wheel wiring harness, near the X200 connector	—	—
J211	Instrument Panel Wiring Harness	UD7/UFT	In the engine compartment, approximately 30 cm (11.8 inches) from the windshield washer pump		—
J223	Instrument Panel Wiring Harness	UVC	Adjacent to K9 Body Control Module		—
J241	Instrument Panel Wiring Harness	—	In the instrument panel harness, center of the instrument panel, approximately 13.5 cm (5.3 inches) from the parking assist control module breakout		—
J242	Instrument Panel Wiring Harness	—	In the instrument panel wiring harness	—	—
J244	Instrument Panel Wiring Harness	—	In the instrument panel harness, left side of the instrument panel, approximately 12 cm (5 inches) from the X200 breakout towards the instrument panel cluster connector		—
J245	Instrument Panel Wiring Harness	DE5	In the instrument panel harness, center of the instrument panel, approximately 30 cm (12 inches) from the radio and HVAC control assembly breakout		—
J246	Instrument Panel Wiring Harness	DE5	In the instrument panel harness, center of the instrument panel, approximately 43.5 cm (17 inches) from the radio and HVAC control assembly breakout		—
J247	Instrument Panel Wiring Harness	—	In the instrument panel harness, left side of the instrument panel, approximately 36 cm (14.37 inches) from the C200 breakout towards the underhood fuse block		—

Code	Name	Option	Location	Locator View	Connector End View
J248	Instrument Panel Wiring Harness	—	In the instrument panel harness, left side of the instrument panel, approximately 8 cm (3.14 inches) from the C200 breakout towards the instrument panel cluster connector		—
J249	Instrument Panel Wiring Harness	—	In the instrument panel harness, right side of the instrument panel, approximately 21 cm (8 inches) from the G304 breakout		—
J250	Instrument Panel Wiring Harness	—	In the instrument panel harness, right side of the instrument panel, approximately 5 cm (2.16 inches) from the air temperature actuator connector breakout towards the inflatable restraint instrument panel module connector		—
J263	Instrument Panel Wiring Harness	TP3	In the instrument panel harness, left side of the instrument panel, approximately 36 cm (14.37 inches) from the C200 breakout towards the underhood fuse block		—
J264	Steering Column Wiring Harness	—	In the steering wheel wiring harness, approximately 20 cm (8 inches) from the X200 connector	—	—
J271	Instrument Panel Wiring Harness	U2K/UE1	In the instrument panel harness, approximately 7.5 cm (3 inches) from the vehicle communication interface module and cigar lighter connectors breakout		—
J280	Instrument Panel Wiring Harness	Cutaway	In the instrument panel harness, approximately 20 cm (7.9 inches) from the body fuse block and air bag module connectors breakout		—
J307	Front Headliner Wiring Harness	C69	In the front headliner wiring harness, center of the headliner, approximately 15 cm (6 inches) from the X205 breakout towards the left vanity mirror lamp connector		—
J308	Body Wiring Harness	C69	In the body wiring harness, left side of the passenger compartment, approximately 22 cm (9 inches) from the breakout for the door jamb switch LR side	• • •	—

Code	Name	Option	Location	Locator View	Connector End View
J310	Body Wiring Harness	C69	In the body wiring harness, left side of the passenger compartment, approximately 32 cm (12.79 inches) from the breakout for the door jamb switch left rear side	• • •	—
J311	Body Wiring Harness	C69	In the body wiring harness, left side of the passenger compartment, approximately 5 cm (2 inches) from the door jamb switch LR side breakout	• • •	—
J314	Front Headliner Wiring Harness	—	In the front headliner wiring harness, center of the headliner, approximately 22 cm (8.5 inches) from the X205 breakout towards the left vanity mirror lamp connector		—
J315	Chassis Wiring Harness	—	In the chassis wiring harness, left side frame, approximately 31 cm (12 inches) from the G300 breakout	• • • •	—
J322	Body Wiring Harness	Cargo/ Passenger + AU3	In the body wiring harness, near the front passenger seat, approximately 40 cm (16 inches) from the X306 breakout	• •	—
J323	Body Wiring Harness	Cargo/ Passenger + AU3	In the body wiring harness, near the front passenger seat, approximately 20 cm (8 inches) from the X306 breakout	• •	—
J330	Rear Headliner Wiring Harness	Passenger	In the rear headliner wiring harness, center of the headliner, approximately 30 cm (12 inches) to the courtesy reading lamp rear breakout		—
J331	Body Wiring Harness	Passenger	In the body wiring harness, near the front passenger seat, approximately 15 cm (6 inches) from the X306 breakout		—
J332	Front Headliner Wiring Harness	Cutaway/Cargo - TR9	In the front headliner wiring harness, center of the headliner, approximately 11 cm (4 inches) from the front right sunshade breakout	—	—
J333	Front Headliner Wiring Harness	DH6	In the front headliner wiring harness, center of the headliner, approximately 20 cm (8 inches) from the right sunshade breakout		—
J334	Body Wiring Harness	UVC	Approximately 5 inches rearward of X53A Fuse Block - Rear Body	• • •	—

Code	Name	Option	Location	Locator View	Connector End View
J335	Front Headliner Wiring Harness	U80	In the front headliner wiring harness, approximately 21.5 cm (8.5 inches) from the right sunshade		—
J355	Front Headliner Wiring Harness	C69	In the front headliner wiring harness, center of the headliner, approximately 61 cm (24 inches) from the X205 breakout towards the left vanity mirror lamp connector		—
J356	Body Wiring Harness	—	In the body wiring harness, on the left front side of the vehicle, approximately 20 cm (7.87 inches) from the underhood fuse block breakout	• •	—
J357	Body Wiring Harness	—	In the body wiring harness, approximately 9.0 cm (3.54 inches) from the breakout for X307	• • •	—
J359	Body Wiring Harness	U80	In the body wiring harness, approximately 20.0 cm (7.9 inches) from the multi-axis acceleration sensor module breakout		—
J373	Body Wiring Harness	Passenger	At the base of the right C-pillar	—	—
J374	Body Wiring Harness	Cargo	In the body wiring harness, approximately 20 cm (7.9 inches) from the dome lamp – left roof rail breakout		—
J375	Body Wiring Harness	Cargo	In the body wiring harness, approximately 20 cm (7.9 inches) from the dome lamp – right roof rail breakout		—
J376	Body Wiring Harness	Cargo/ Passenger	In the body wiring harness, approximately 72.5 cm (28.5 inches) from the X410 breakout		—
J387	Chassis Wiring Harness	Cutaway	In the chassis wiring harness, approximately 6 cm (2.36 inches) from the trailer connector breakout	• •	—
J388	Chassis Wiring Harness	Cutaway	In the chassis wiring harness, approximately 10 cm (3.94 inches) from the trailer connector breakout	• •	—
J401	Body Wiring Harness	C36/C49/C69	In the body wiring harness, in the left rear of the vehicle, approximately 21 cm (8 inches) from the X401 breakout	• •	—
J402	Chassis Wiring Harness	—	In the chassis wiring harness, left frame, approximately 20 cm (7.87 inches) from the G400 breakout towards the EBCM connector	• • • •	—

Code	Name	Option	Location	Locator View	Connector End View
J403	Body Wiring Harness	Cargo/ Passenger	In the body wiring harness, left rear of the passenger compartment, approximately 18.5 cm (7 inches) from the X402 breakout	• •	—
J404	Chassis Wiring Harness	—	In the chassis wiring harness, left frame, approximately 10 cm (4 inches) from the G400 breakout towards the EBCM connector	• • • •	—
J405	Rear HVAC Wiring Harness	C36/C69	In the rear HVAC wiring harness, left rear of the passenger compartment, approximately 13 cm (5.31 inches) from the auxiliary blower motor relay breakout towards X409		—
J407	Rear Headliner Wiring Harness	Passenger	In the rear headliner wiring harness, center of the headliner, approximately 6.5 cm (2.5 inches) from X304 towards the rear courtesy/reading lamp connector		—
J410	Body Wiring Harness	Cargo/ Passenger	In the body wiring harness, in the left rear of the vehicle, approximately 47 cm (18 inches) from the X401 breakout	• •	—
J411	Rear HVAC Wiring Harness	C69	In the rear HVAC wiring harness, left rear of the passenger compartment, approximately 20 cm (8 inches) from the blower motor relay breakout, towards X409		—
J412	Rear HVAC Wiring Harness	C36/C69	In the rear HVAC wiring harness, left rear of the passenger compartment, approximately 7 cm (2.8 inches) from the blower motor relay breakout towards X409		—
J413	Rear HVAC Wiring Harness	C36/C69	In the rear HVAC wiring harness, left rear of the passenger compartment, approximately 10 cm (4 inches) from the auxiliary blower motor resistor assembly breakout		—
J420	Rear Bumper Wiring Harness	UD7	In the rear bumper wiring harness, approximately 57 cm (22 inches) from the right rear middle object alarm sensor towards the left rear corner object alarm sensor		—
J421	Rear Bumper Wiring Harness	UD7	In the rear bumper wiring harness, approximately 15 cm (6 inches) from the left rear corner object alarm sensor towards the right rear middle object alarm sensor		—

Code	Name	Option	Location	Locator View	Connector End View
J425	Parking Aid Jumper Wiring Harness	UFT	At the rear of the vehicle		—
J426	Parking Aid Jumper Wiring Harness	UFT	At the rear of the vehicle		—
J431	Chassis Wiring Harness	—	In the chassis wiring harness, approximately 15 cm (5.9 inches) from the fuel pump driver control module	• • • •	—
J432	Chassis Wiring Harness	—	In the chassis wiring harness, approximately 11 cm (4.33 inches) from the X102	• • • •	—
J450	Body Wiring Harness	—	In the body wiring harness, in the rear of the vehicle, approximately 10 cm (3.93 inches) from the X415 breakout	• •	—
J451	Body Wiring Harness	—	In the body wiring harness, in the rear of the vehicle, approximately 17 cm (6.5 inches) from the X415 breakout	• •	—
J452	Body Wiring Harness	—	In the body wiring harness, approximately 17 cm (6.5 inches) from the X419 breakout	• •	—
J453	Body Wiring Harness	—	In the body wiring harness, in the left rear of the vehicle, approximately 10 cm (4 inches) from the X419 breakout	• •	—
J500	Driver Door Wiring Harness	AU3/DE5/A31	In the left front door wiring harness, driver door, approximately 7 cm (3 inches) from the left front door speaker breakout		—
J501	Driver Door Wiring Harness	AU3	In the left front door wiring harness, driver door, approximately 6 cm (2.36 inches) from the driver outside rearview mirror breakout	—	—
J502	Driver Door Wiring Harness	DE5	In the left front door wiring harness, driver door, approximately 4 cm (2 inches) from the left front door speaker breakout		—
J600	Passenger Door Wiring Harness	AU3/DE5/A31	In the right front door wiring harness, front passenger door, approximately 4 cm (2 inches) from the passenger outside rearview mirror breakout		—

Code	Name	Option	Location	Locator View	Connector End View
J601	Passenger Door Wiring Harness	AU3	In the right front door wiring harness, front passenger door, approximately 5 cm (2 inches) from the passenger outside rearview mirror breakout	—	—
J901	Right Rear Cargo Door Wiring Harness	Cargo/ Passenger + AU3	In the rear cargo door wiring harness, approximately 4 cm (1.5 inches) from the X902 breakout		—
J902	Right Rear Cargo Door Wiring Harness	Cargo/ Passenger + C49	In the right rear door wiring harness, right rear cargo door, approximately 12 cm (4.7 inches) from the X902 breakout		—
JX200	Instrument Panel Wiring Harness	—	In the instrument panel wiring harness, left front side of the floor, where the carpet ends behind the brake pedal next to JX250		
JX250	Instrument Panel Wiring Harness	—	In the instrument panel wiring harness, left front side of the floor, where the carpet ends behind the brake pedal next to JX200		
JX347	Body Wiring Harness	—	In the body wiring harness, left side of the passenger compartment, attached to the lower left B-pillar part of G347	• • •	
JX348	Body Wiring Harness	—	In the body wiring harness, right side of the passenger compartment, attached to the lower right B-pillar part of G348		

Repair Instructions

Front Compartment Fuse Block Replacement (L8T)

Removal Procedure

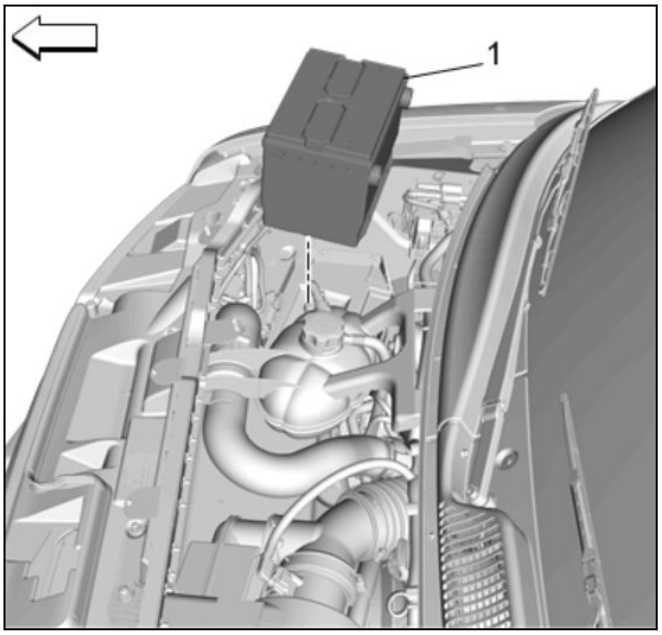

4597853

1. Remove the battery. (1) Battery Replacement 3-85

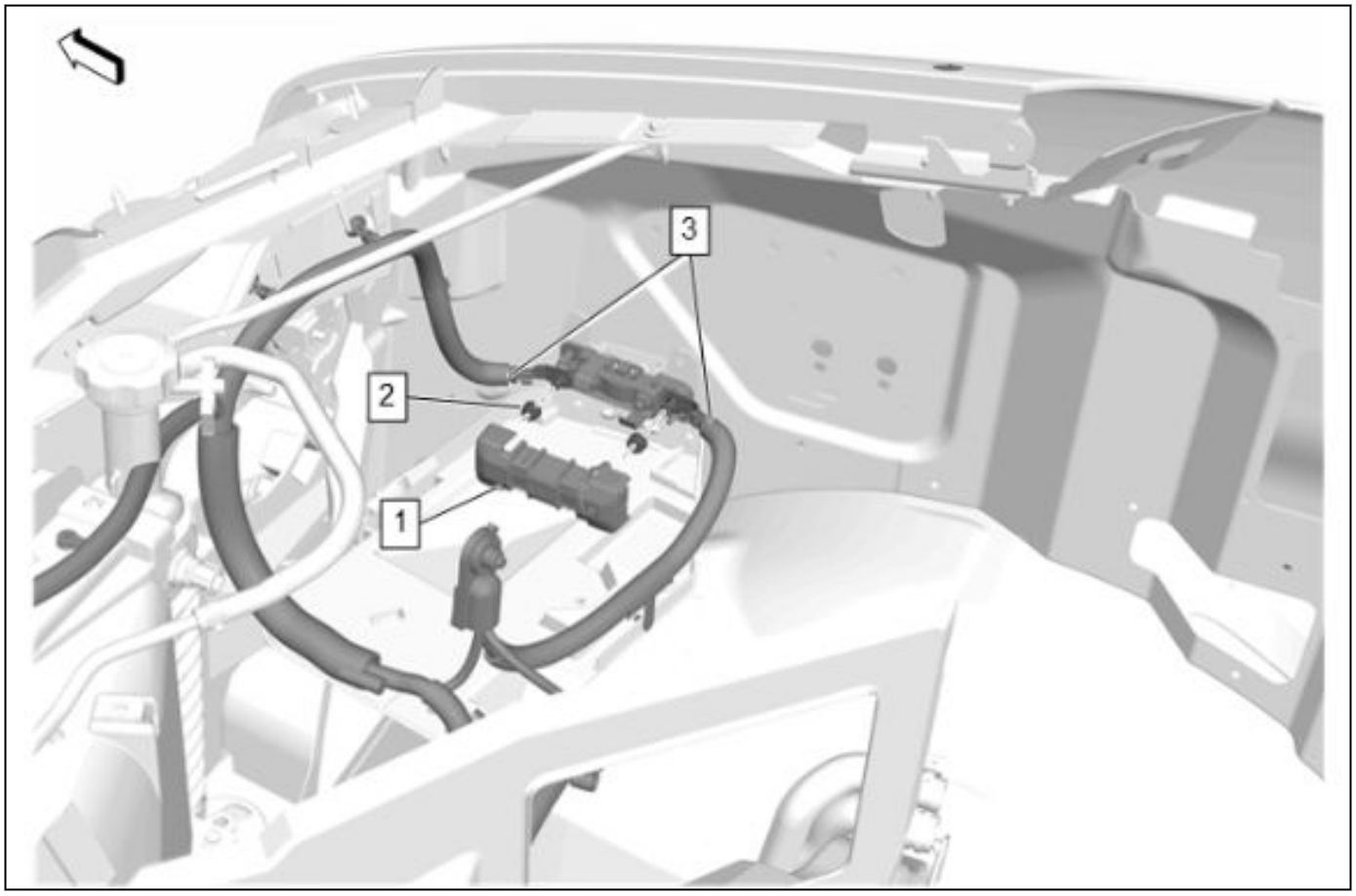

5694205

2. Front Compartment Fuse Block Cover(1) » Remove
3. Front Compartment Fuse Block Cable Nut (2) » Remove[2x]
4. Battery Positive Cable (3) » Remove[2x]

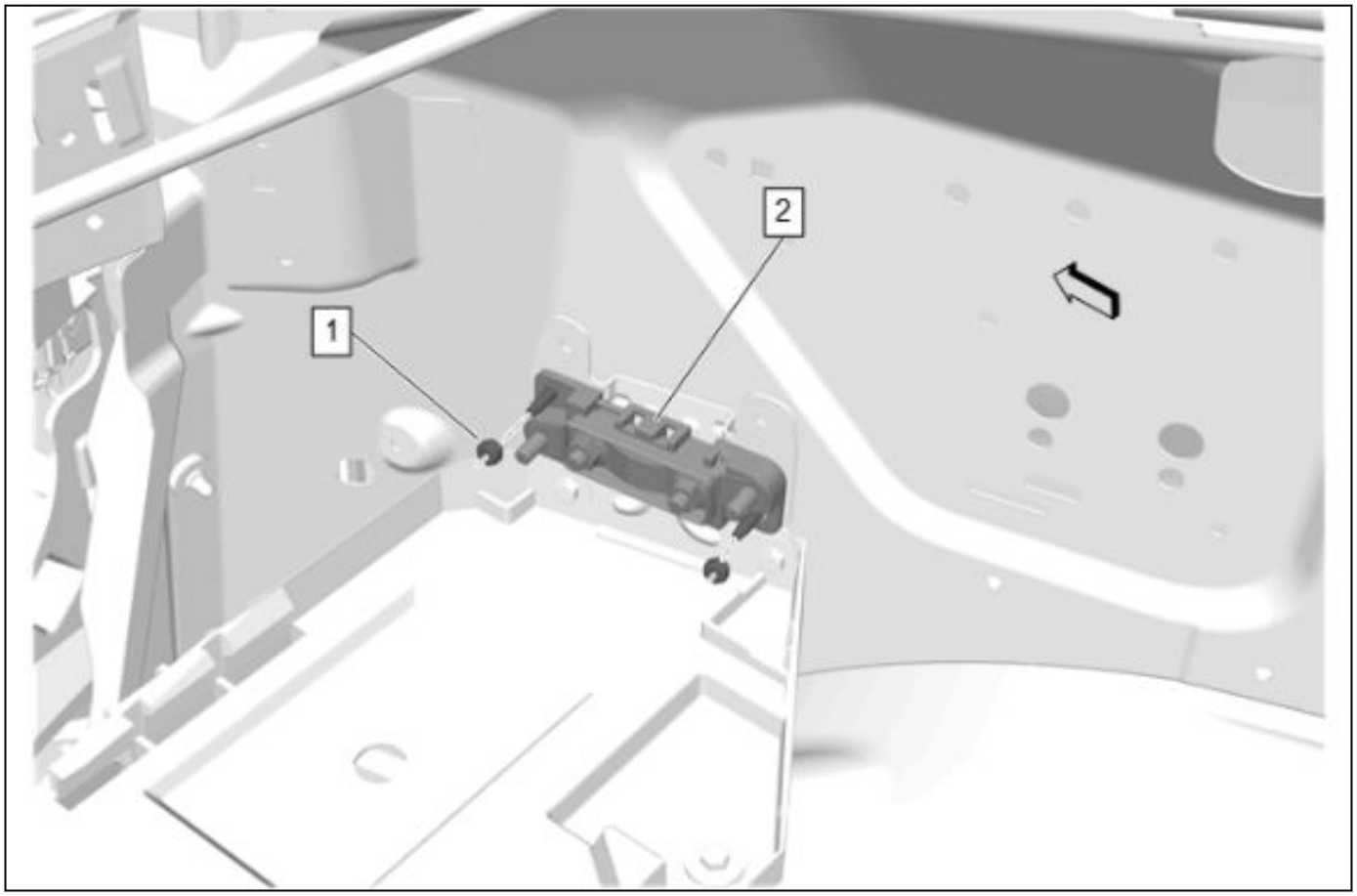

5694216

5. Front Compartment Fuse Block Nut (1) » Remove[2x]
6. Front Compartment Fuse Block(2) » Remove

Installation Procedure

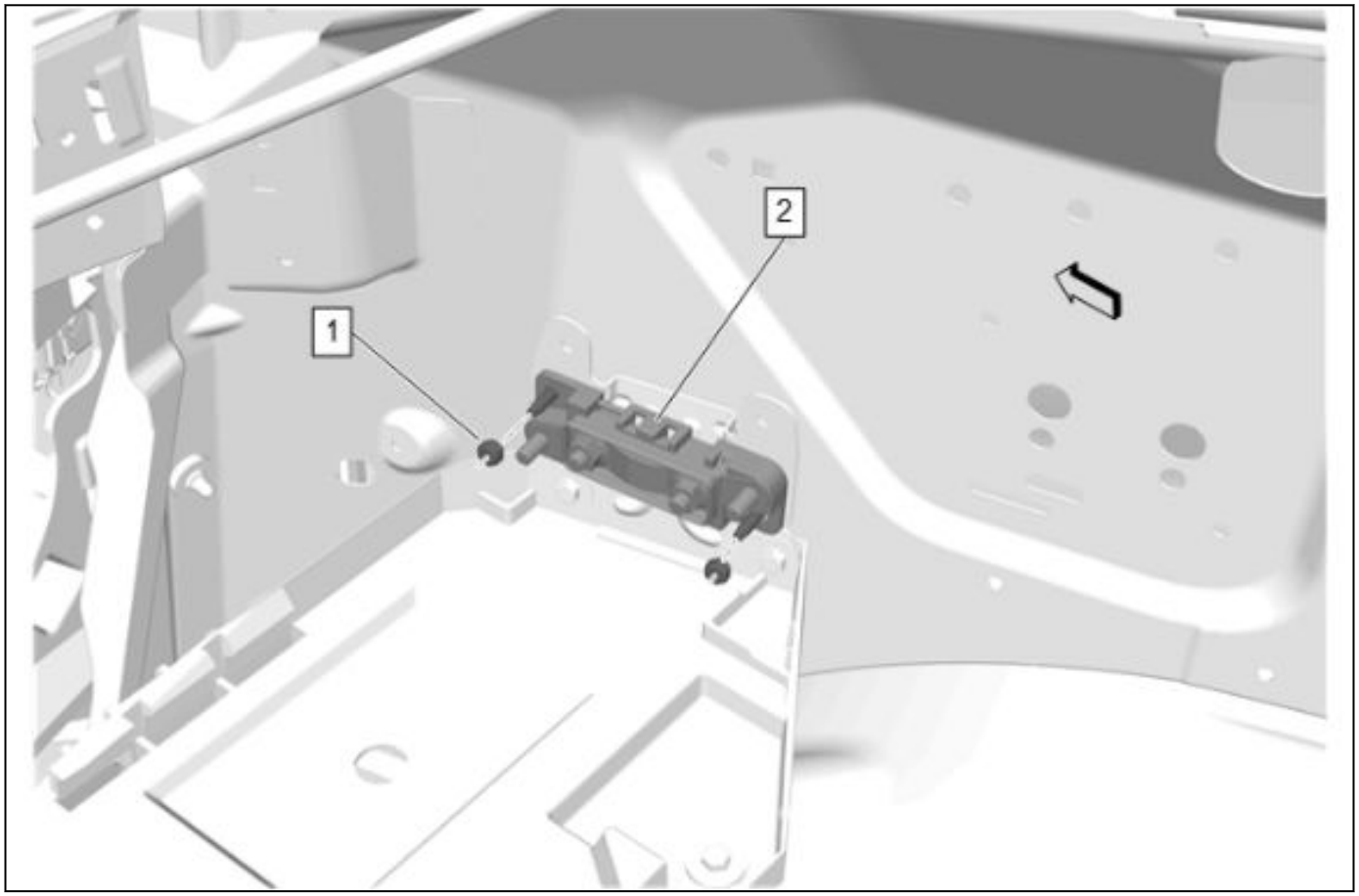

5694216

1. Front Compartment Fuse Block(2) » Install

Caution: Refer to [Link target (target-id 178169-) not found]

2. Front Compartment Fuse Block Nut (1) » Install and tighten[2x] **9** N•m **(80 lb in)**

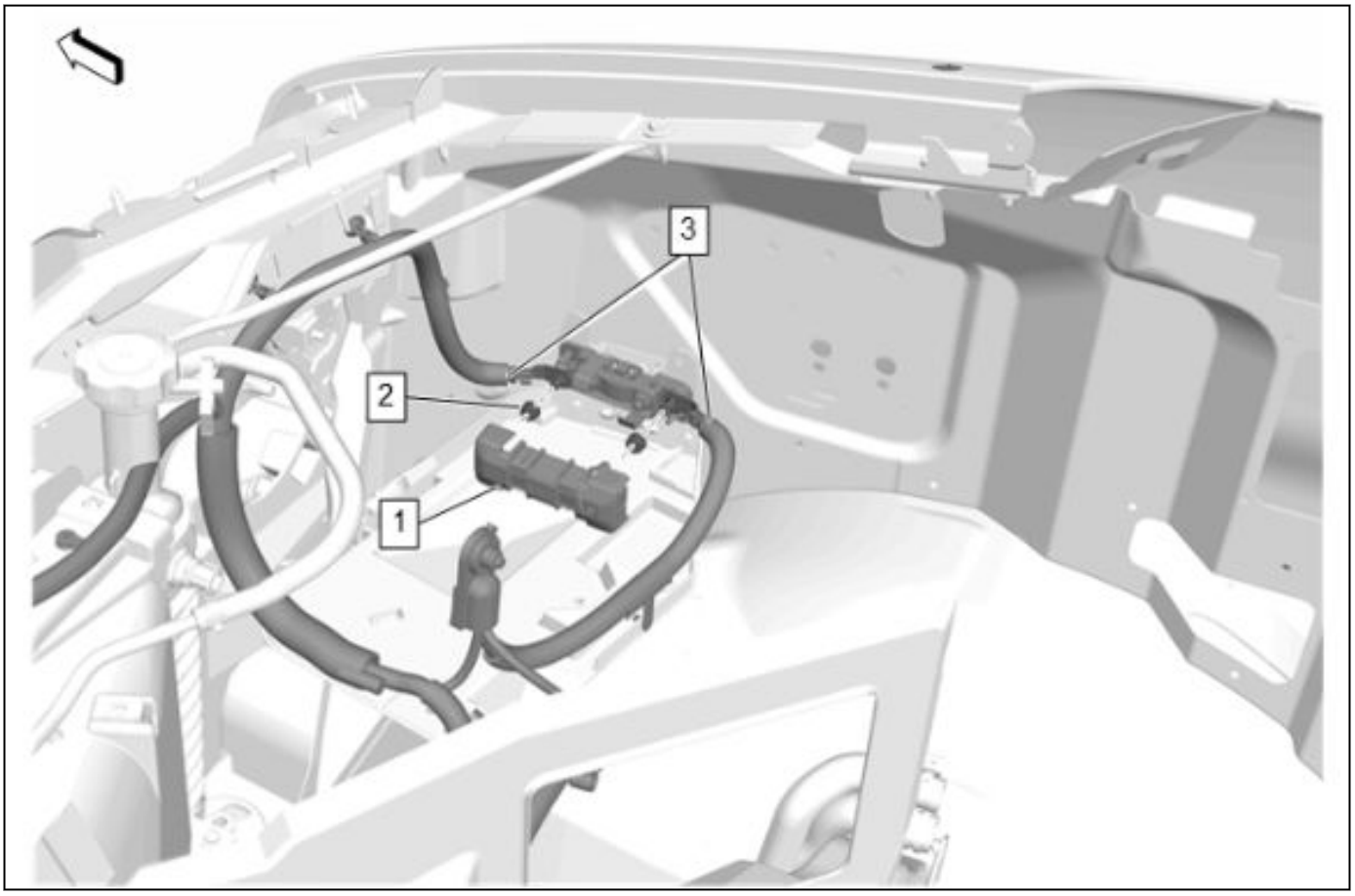

5694205

3. Battery Positive Cable (3) » Install[2x]
4. Front Compartment Fuse Block Cable Nut (2) » Install and tighten[2x] **20** N•m **(15 lb ft)**
5. Front Compartment Fuse Block Cover(1) » Install
6. Install the battery. (1) *Battery Replacement 3-85*

Underhood Electrical Center or Junction Block Replacement

Removal Procedure

1. Disconnect the battery negative cable. *Battery Negative Cable Disconnection and Connection 3-8* *Battery Negative Cable Disconnection and Connection 3-9*.

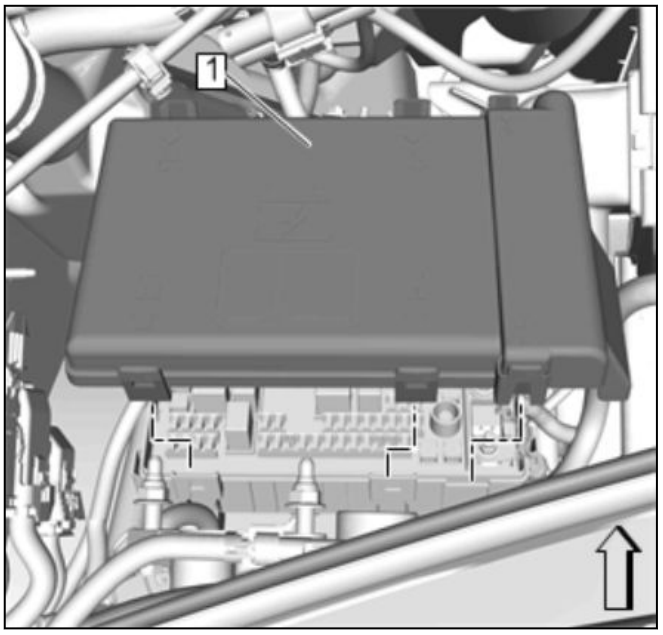

4853644

2. Fuse Block Cover (1) » Remove

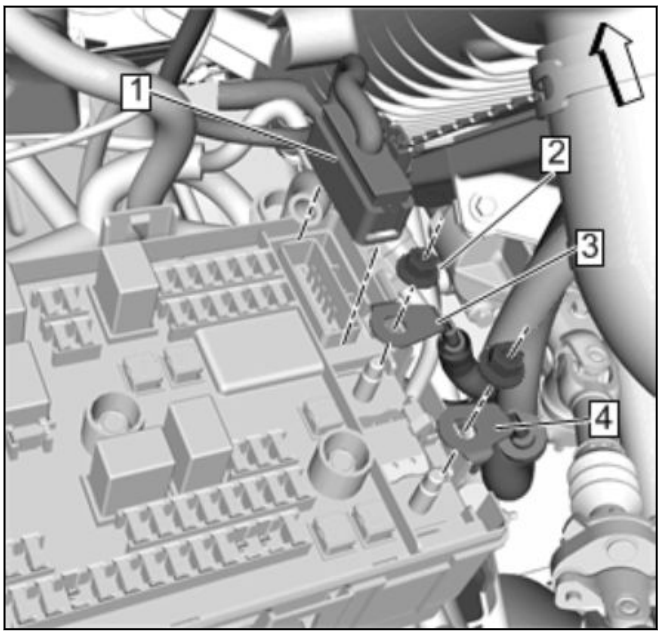

4853648

3. Forward Lamp Wiring Harness Connector (1) » Remove
4. Remove the fuse block wiring harness terminal nut. (2) [2x]
5. Remove the instrument panel wiring harness terminal. (3)
6. Remove the wiring harness terminal. (4)

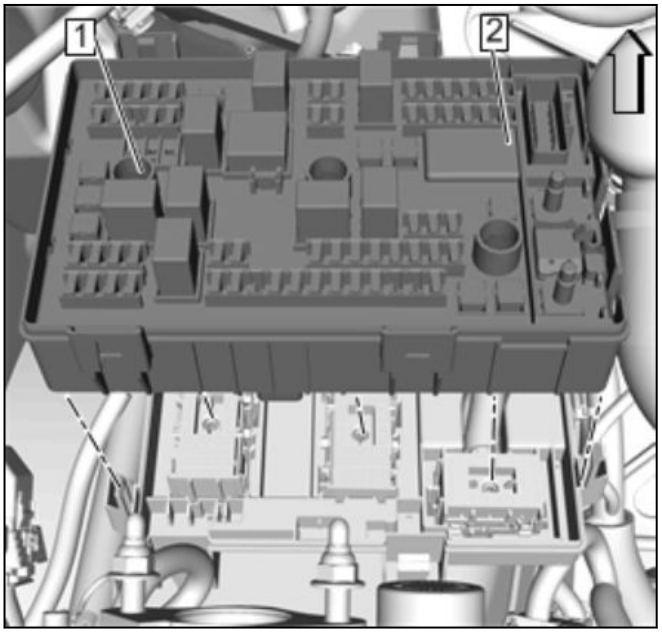

4853651

7. Junction Block Bolt (1) » Loosen[3x]
8. Release 4 junction block retaining tabs.
9. Junction Block (2) » Remove

Installation Procedure

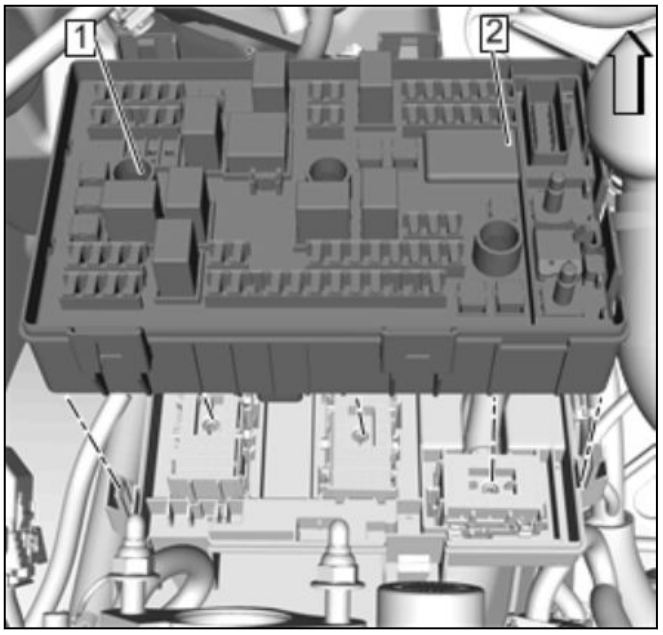

4853651

1. Junction Block (2) » Install
2. Engage the 4 junction block retaining tabs.

Caution: Refer to [Link target (target-id 178169-) not found] .

3. Junction Block Bolt (1) » Tighten[3x] **3.75** N•m **(33 lb in)**

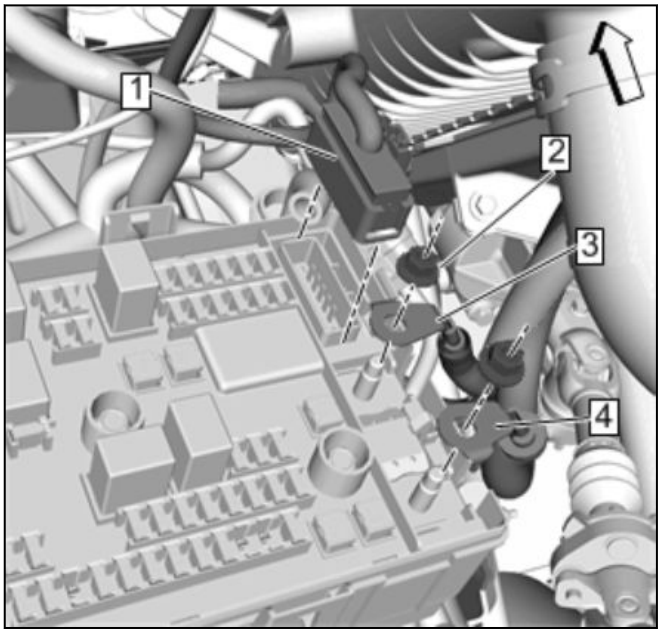

4853648

4. Install the wiring harness terminal (4)
5. Instrument Panel Wiring Harness Terminal (3) » Install
6. Fuse Block Wiring Harness Terminal Nut (2) » Install and tighten[2x] **10** N•m **(89 lb in)**

7. Forward Lamp Wiring Harness Connector (1) » Install

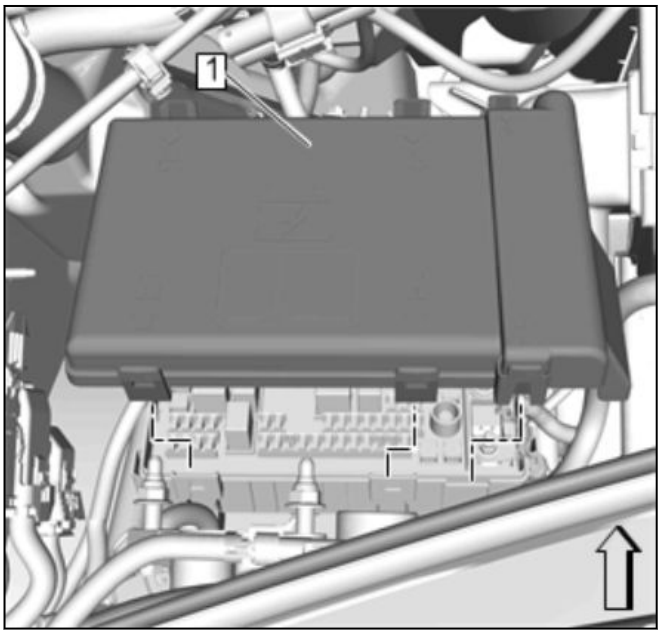

4853644

8. Fuse Block Cover (1) » Install
9. Connect the battery negative cable. *Battery Negative Cable Disconnection and Connection 3-8* *Battery Negative Cable Disconnection and Connection 3-9*.

Body Wiring Harness Junction Block Replacement

Removal Procedure

1. Battery Negative Cable » Disconnect— *Battery Negative Cable Disconnection and Connection 3-8* *Battery Negative Cable Disconnection and Connection 3-9*

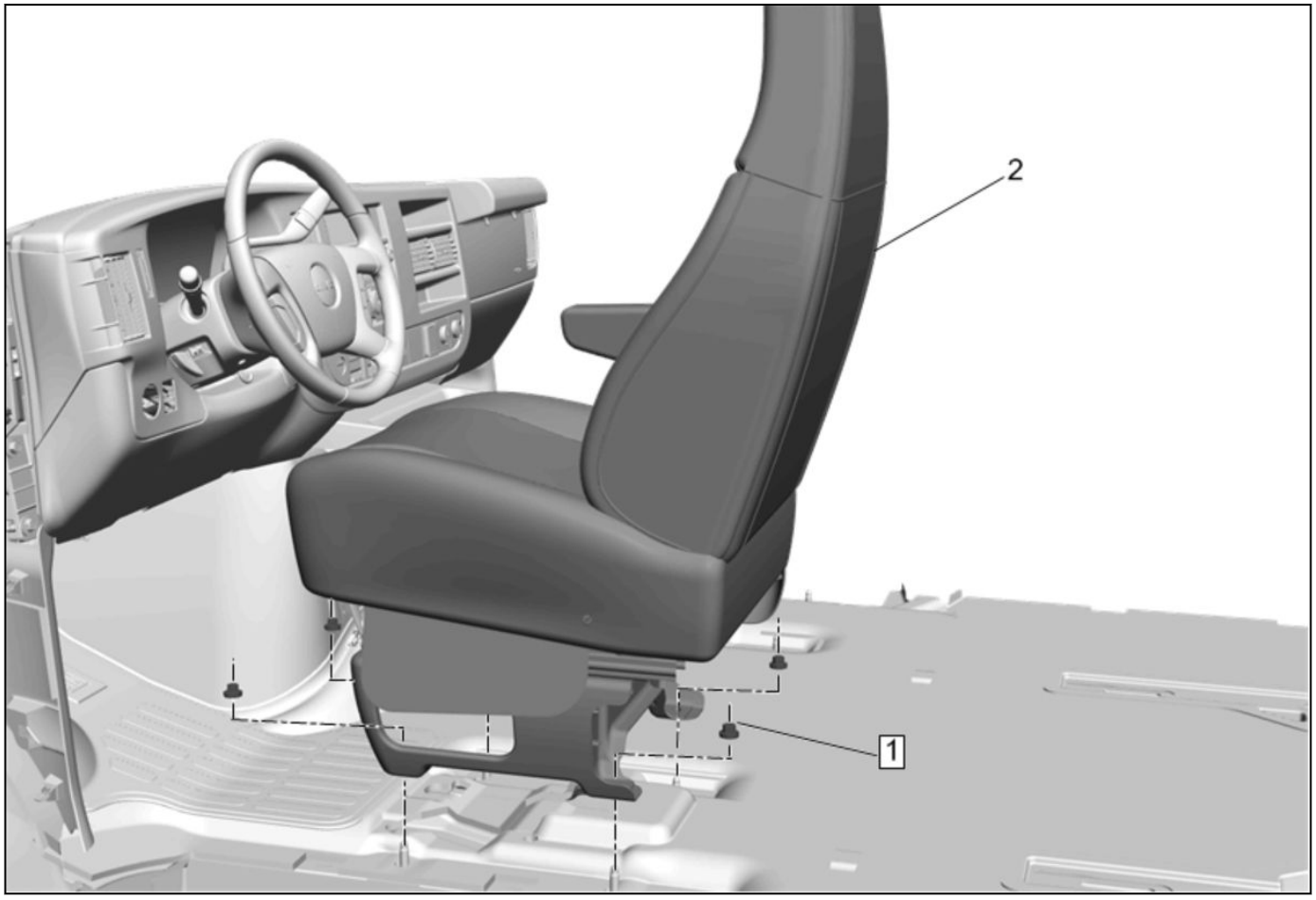

4848136

2. Remove the left hand seat (2). [Link target (target-id 56831-) not found]

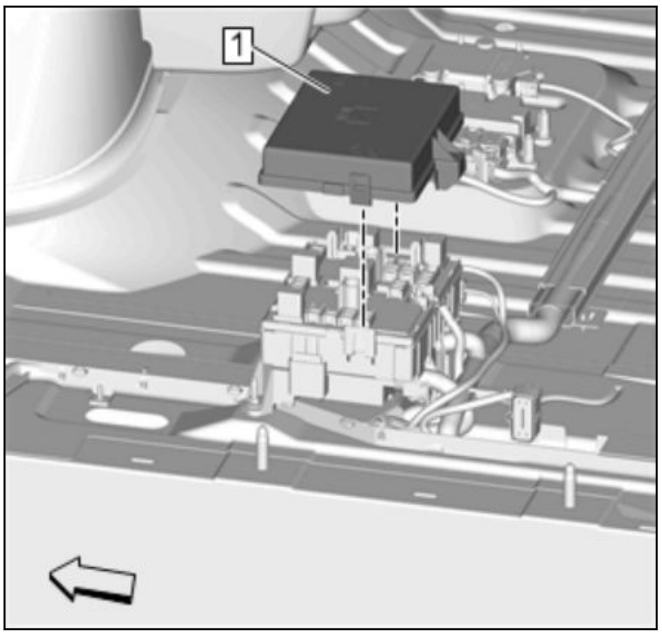

4852607

3. Fuse Block Cover (1) » Remove

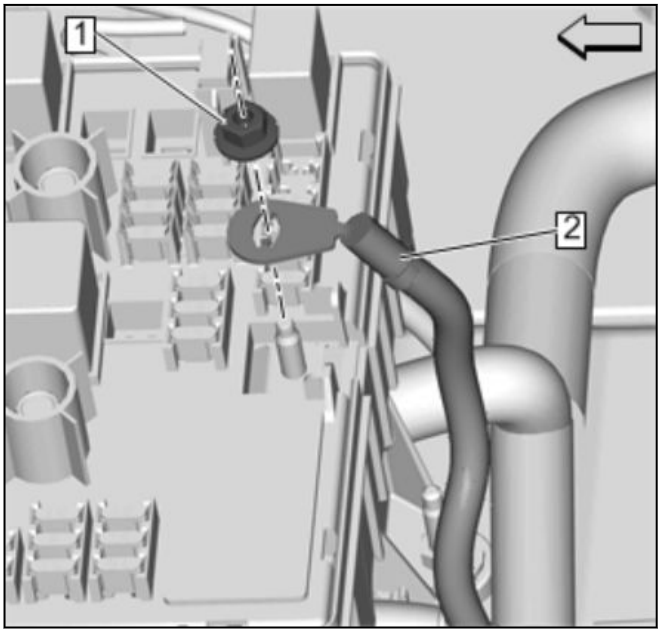

4852609

4. Instrument Panel Wiring Harness Junction Block Nut (1) » Remove
5. Instrument Panel Wiring Harness Terminal (2) » Reposition

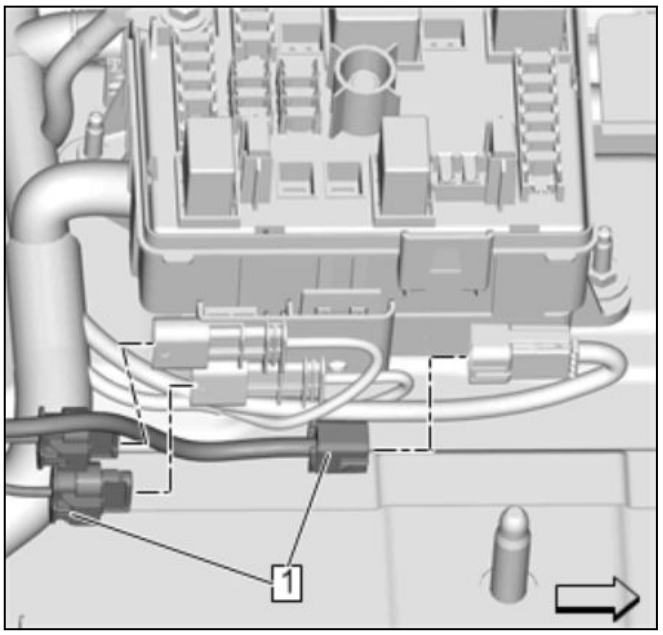

4852616

6. Disconnect all electrical connectors. (1)

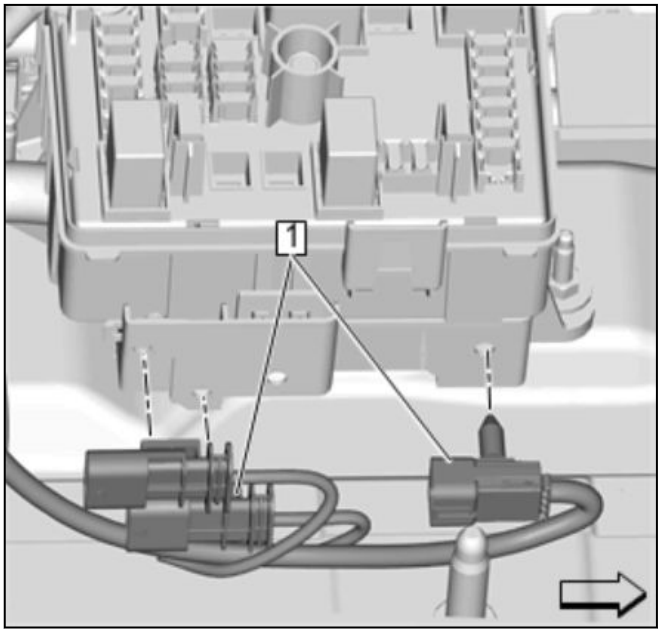

4852631

7. Disconnect all electrical connectors. (1) from the fuse block bracket.

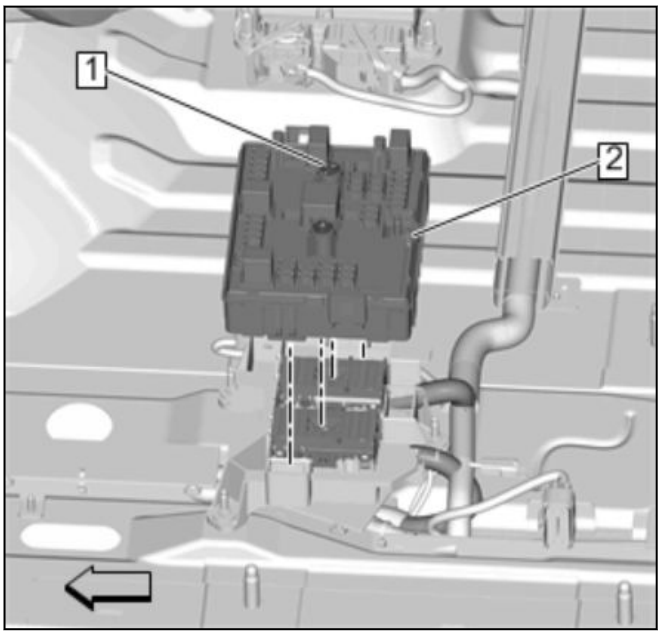

4852636

8. Body Wiring Harness Terminal Bolt (1) » Loosen[2x]
9. Release the tabs that retain the body wiring junction block (2) to the junction block base.

Installation Procedure

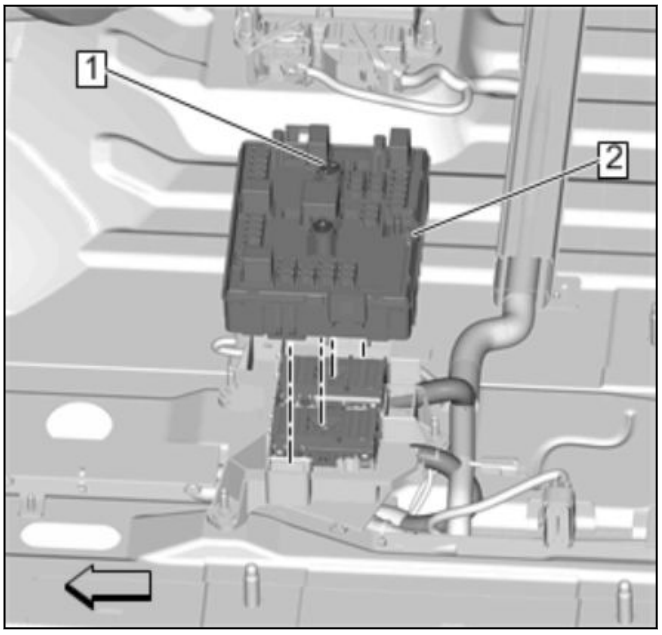

4852636

1. Install body wiring harness junction block (2) to the base.

Caution: Refer to [Link target (target-id 178169-) not found] .

2. Body Wiring Harness Terminal Bolt (1) » Tighten[2x] **3.5** N•m **(31 lb in)**

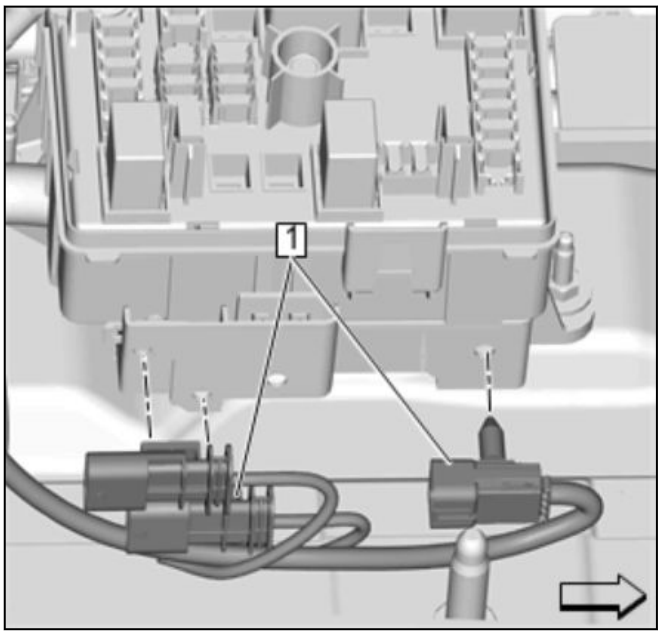

4852631

3. Connect all electrical connectors. (1) to the fuse block bracket.

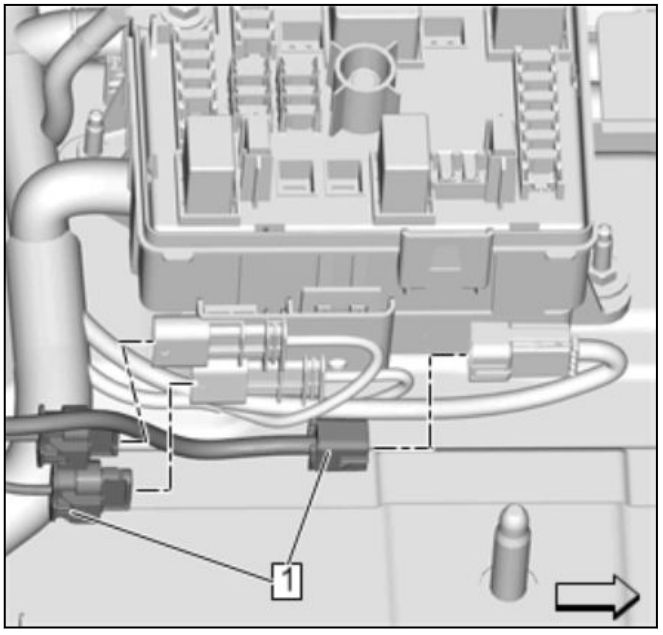

4852616

4. Connect all electrical connectors. (1)

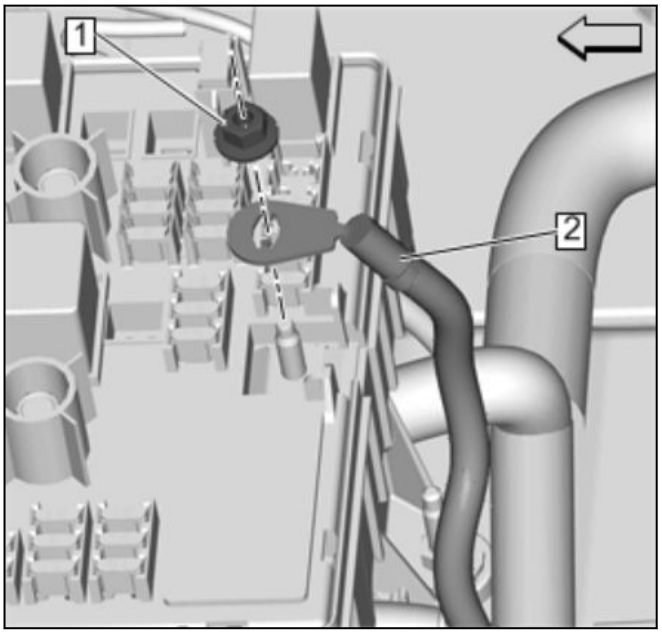

4852609

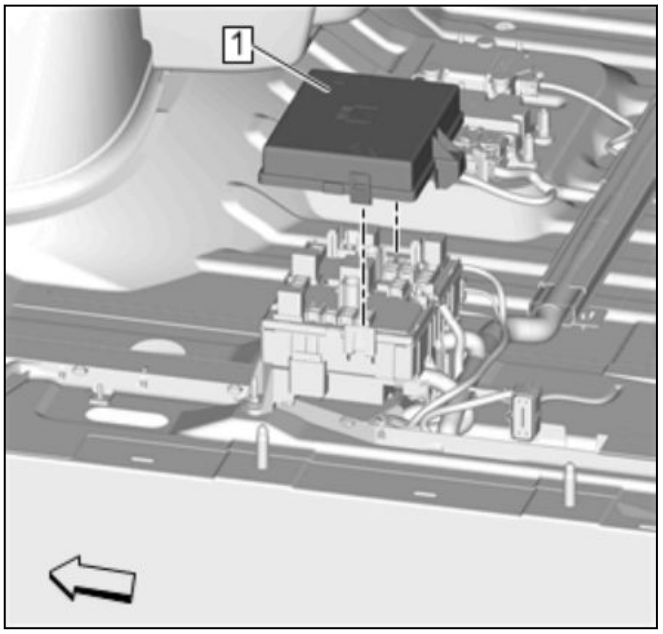

4852607

5. Instrument Panel Wiring Harness Terminal (2) » Install
6. Instrument Panel Wiring Harness Junction Block Nut (1) » Install and tighten **10** N•m **(89 lb in)**
7. Fuse Block Cover (1) » Install

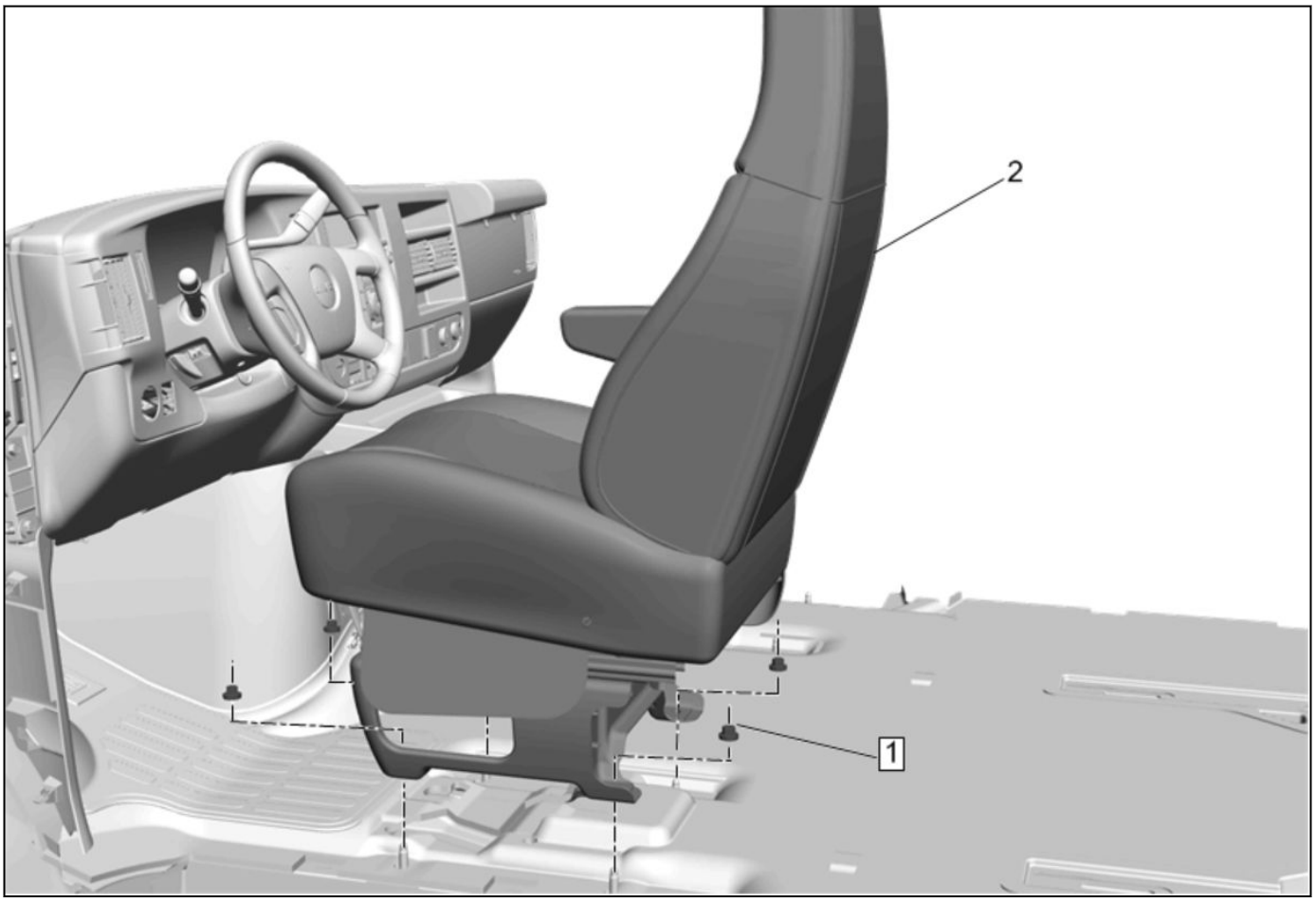

4848136

8. Install the Left Hand Seat. [Link target (target-id 56831-) not found]
9. Battery Negative Cable » Install— *Battery Negative Cable Disconnection and Connection 3-8* *Battery Negative Cable Disconnection and Connection 3-9*

Section 6

Safety and Security

Immobilizer **6-3**
- **Schematic and Routing Diagrams** **6-3**
  - Immobilizer Schematics 6-4
- **Repair Instructions** **6-5**
  - Theft Deterrent Module Replacement 6-5

Remote Functions **6-6**
- **Schematic and Routing Diagrams** **6-6**
  - Remote Function Schematics 6-7
- **Repair Instructions** **6-8**
  - Remote Function Actuator Module Replacement 6-8

Seat Belts **6-9**
- **Specifications** **6-9**
  - Fastener Specifications 6-9
  - Adhesives, Fluids, Lubricants, and Sealers 6-9
- **Schematic and Routing Diagrams** **6-9**
  - Seat Belt Schematics 6-10
- **Diagnostic Information and Procedures** **6-11**
  - Seat Belt Guide Adjuster Stuck in Full Down Position 6-11
  - Seat Belt Retractor Does Not Function Properly or is Inoperative - Automatic Locking Retractor 6-11
  - Seat Belt Retractor Does Not Function Properly or is Inoperative - Overspool Lock 6-11
  - Seat Belt Retractor Does Not Function Properly or is Inoperative - Vehicle Sensing 6-12
  - Seat Belt Retractor Does Not Function Properly or is Inoperative - Belt Sensing 6-12
  - Seat Belt Retractor Does Not Function Properly or is Inoperative - Belt Twisting 6-12
  - Seat Belt Retractor Does Not Function Properly or is Inoperative - Guide Contamination 6-14
  - Noise Heard from Motorized Seat Belt Retractor 6-14
  - Seat Belt Buckle Does Not Function Properly and/or Seat Belt Warning Lamp Illuminated 6-15
- **Repair Instructions** **6-15**
  - Seat Belt Repairs and Inspections Required After a Collision 6-15
  - Seat Belt Retractor Guide Cleaning 6-15
  - Seat Belt Latch Stop Installation 6-18
  - Rear Seat Buckle Side Belt Replacement 6-19
  - Rear Seat Center Buckle Side Belt Replacement 6-20
  - Seat Belt Replacement - Center Rear (with Split Bench) 6-21
  - Seat Belt Height Adjuster Replacement - Front 6-24
  - Front Seat Belt Retractor Replacement 6-25
  - Rear Seat Retractor Side Belt Replacement (Back Row) 6-27
  - Rear Seat Retractor Side Belt Replacement (Middle Rows - Left Side) 6-28
  - Rear Seat Retractor Side Belt Replacement (Middle Rows - Right Side) 6-29
  - Rear Seat Retractor Side Belt Replacement (2nd Row - Right Side) 6-30
  - Rear Seat Center Retractor Side Belt Replacement 6-30

Supplemental Restraints **6-35**
- **Specifications** **6-35**
  - Fastener Specifications 6-35
- **Schematic and Routing Diagrams** **6-35**
  - SIR Schematics 6-36

Repair Instructions **6-40**

Airbag Front End Sensor Replacement 6-40

Restraints Control Module Replacement 6-41

Airbag Steering Wheel Module Replacement 6-42

Instrument Panel Airbag Replacement 6-44

Front Seat Outboard Seat Back Airbag Replacement 6-44

Airbag Side Impact Sensor Replacement - Front 6-49

Airbag Side Impact Sensor Replacement - Left Side Rear 6-50

Airbag Side Impact Sensor Replacement - Right Side Rear (With YA2) 6-52

Airbag Side Impact Sensor Replacement - Right Side Rear (With E24) 6-54

Instrument Panel Airbag Switch Replacement 6-56

Airbag Roof Side Rail Module Replacement - Front 6-57

Roof Side Rail Airbag Replacement (without YA2) 6-58

Airbag Roof Side Rail Module Replacement - Rear 6-59

Seat Belt Buckle Pretensioner Replacement 6-60

Repairs and Inspections Required After a Collision 6-61

Safety and Security

Immobilizer

Schematic and Routing Diagrams

Immobilizer Schematics (Immobilizer)

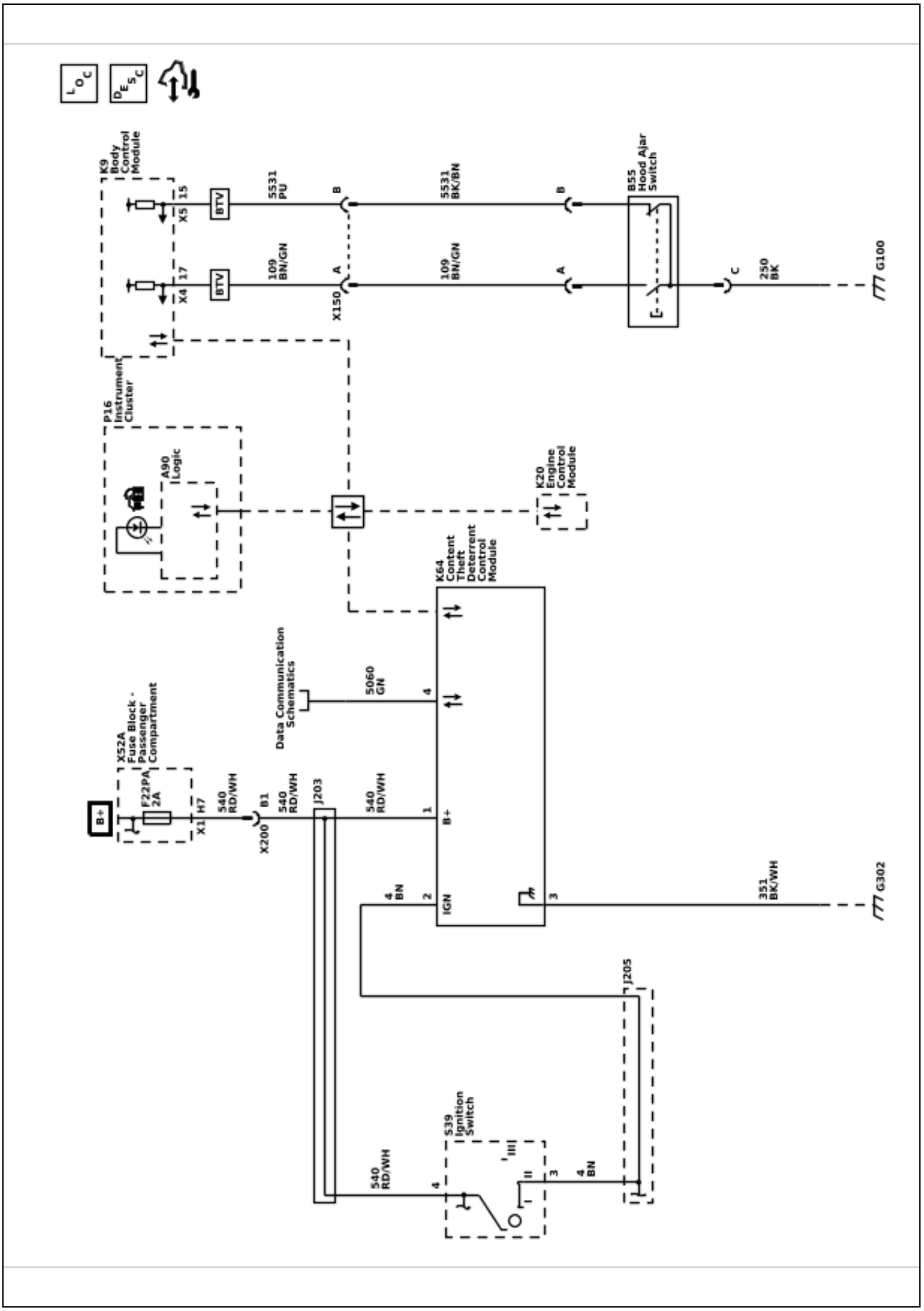

7085797

Repair Instructions

Theft Deterrent Module Replacement

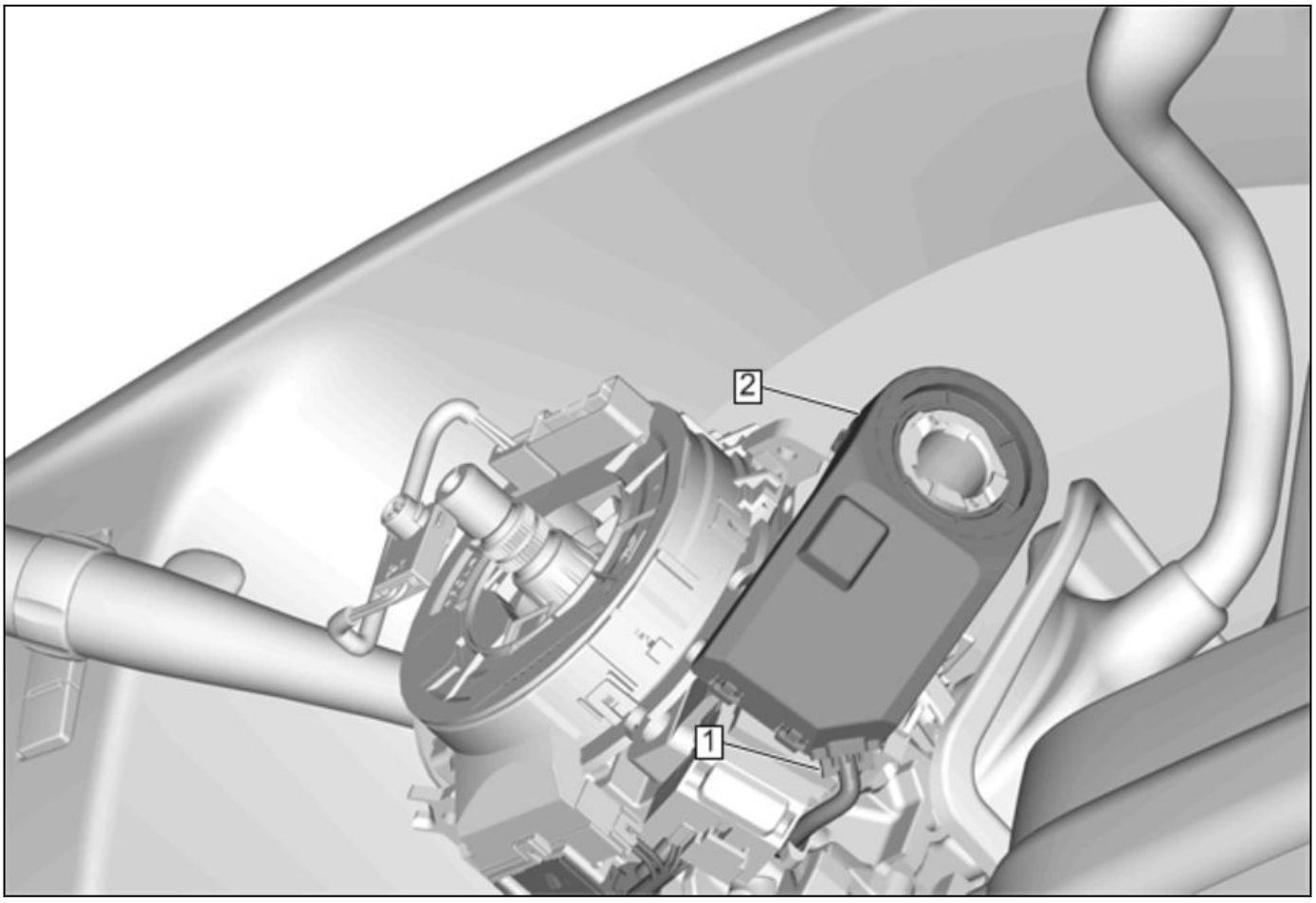

4843135

Theft Deterrent Module Replacement

Callout	Component Name
Preliminary Procedure [Link target (target-id 148330-) not found]	
1	Electrical Connector
2	Theft Deterrent Module **Procedure** 1. Release the retaining tabs and remove the theft deterrent module from the ignition lock cylinder case. 2. Program the theft deterrent system. [Link target (target-id 72864-) not found]

Remote Functions

Schematic and Routing Diagrams

7085800

Remote Function Schematics (Keyless Entry (ATG / UJM))

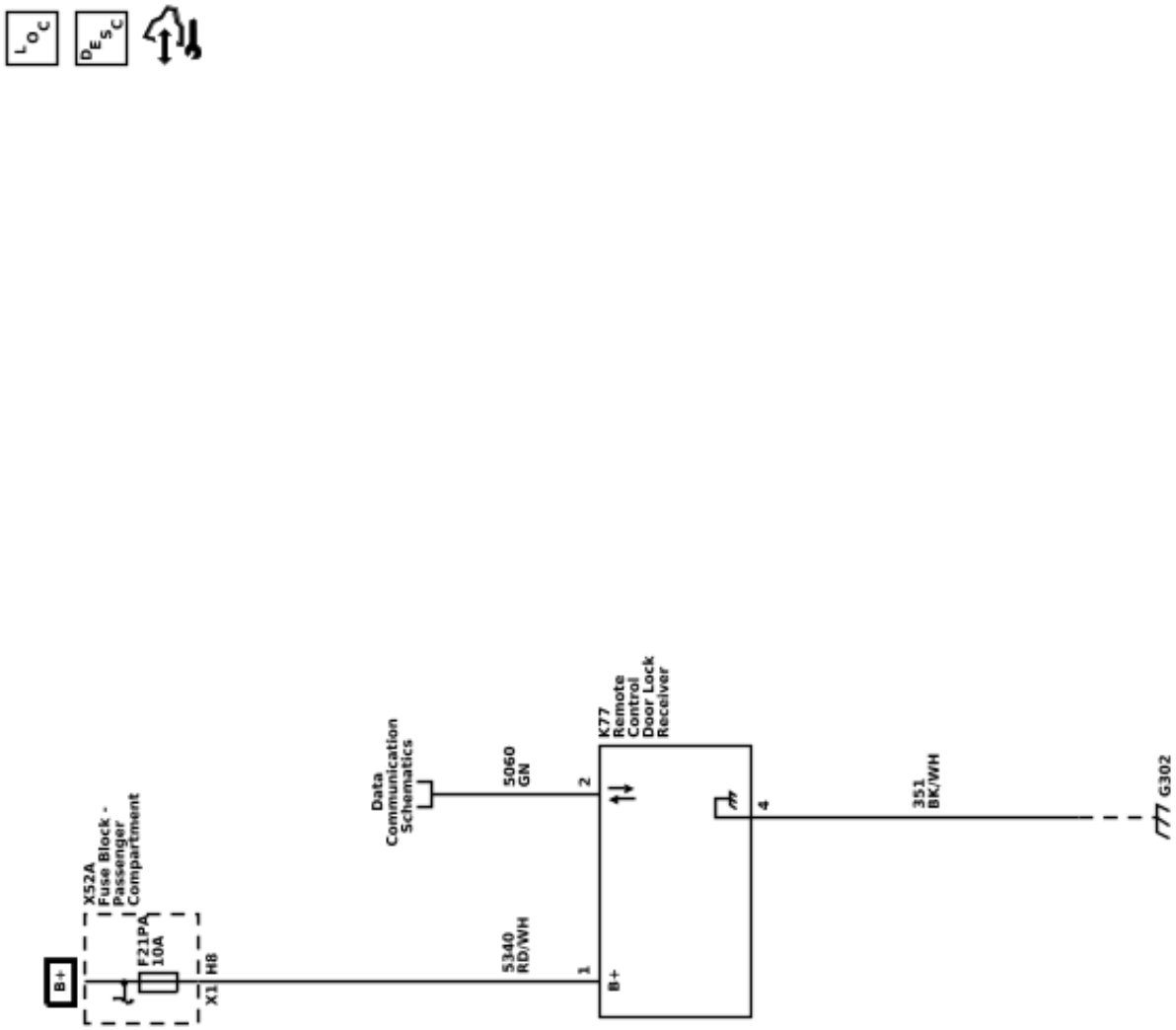

Repair Instructions

Remote Function Actuator Module Replacement

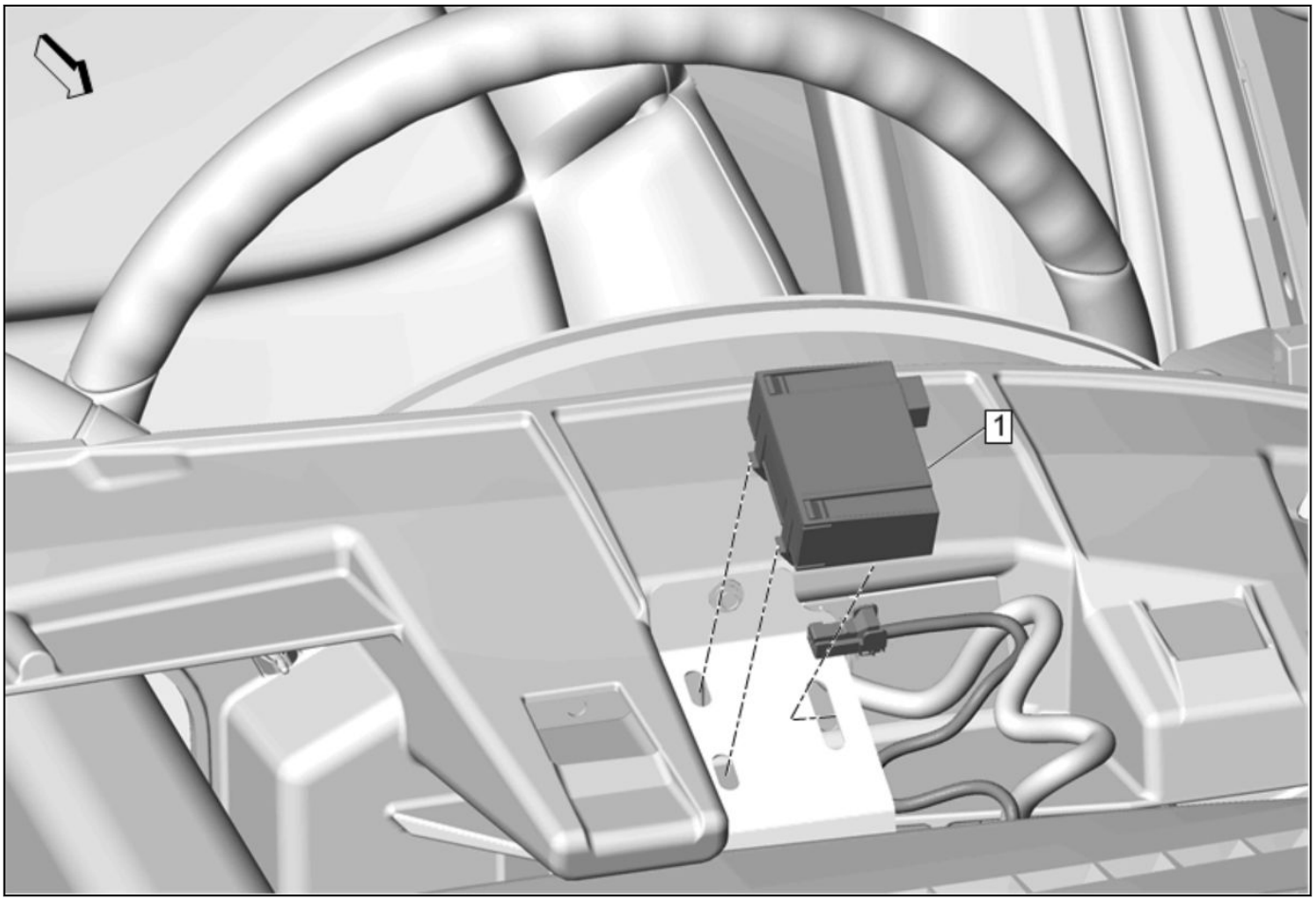

4852945

Remote Function Actuator Module Replacement

Callout	Component Name
Preliminary Procedure [Link target (target-id 157423-) not found]	
1	Remote Control Door Lock Receiver **Procedure** 1. Disconnect the electrical connector. 2. Release the retaining tabs. 3. Perform the necessary programming and setup procedures: [Link target (target-id 72864-) not found] .

Seat Belts

Specifications

Fastener Specifications

Reusable Threaded Fastener Tightening Specifications

Note: All fasteners listed in this table can be reused after removal.	
Application	Specification
	Metric (English)
Front Seat Belt Guide Bolt	52 N•m (38 lb ft)
Front Seat Belt Retractor Bolt	52 N•m (38 lb ft)
Rear Seat Belt Bezel Screw	2 N•m (18 lb in)
Rear Seat Belt Retractor Fastener	10 N•m (89 lb in)
Rear Seat Belt Retractor Bolt - Upper	52 N•m (38 lb ft)
Rear Seat Belt Retractor Nut	52 N•m (38 lb ft)
Rear Seat Cushion Frame Bolt	75 N•m (55 lb ft)
Rear Seat Retractor Bolt - Lower	52 N•m (38 lb ft)
Rear Seat Retractor Bolt - Upper	52 N•m (38 lb ft)
Rear Seat Retractor Cover Screw	2 N•m (18 lb in)
Rear Seat Retractor Housing Screw	1.5 N•m (13 lb in)
Rear Seat Shoulder Belt Bolt	52 N•m (38 lb ft)
Seat Belt Buckle Retaining Bolt	52 N•m (38 lb ft)
Seat Belt Height Adjuster Bolt	45 N•m (33 lb ft)

Adhesives, Fluids, Lubricants, and Sealers

Adhesives, Fluids, Lubricants, and Sealers

Application	Type of Material	GM Part Number	
		United States	Canada
Front Seat Belt Guide Bolt	Thread Locking Adhesive	19333511	10953489
Seat Belt Height Adjuster Bolt	Thread Locking Adhesive	19333511	10953489

Schematic and Routing Diagrams

Seat Belt Schematics (Seat Belt Schematics (UEN))

7085801

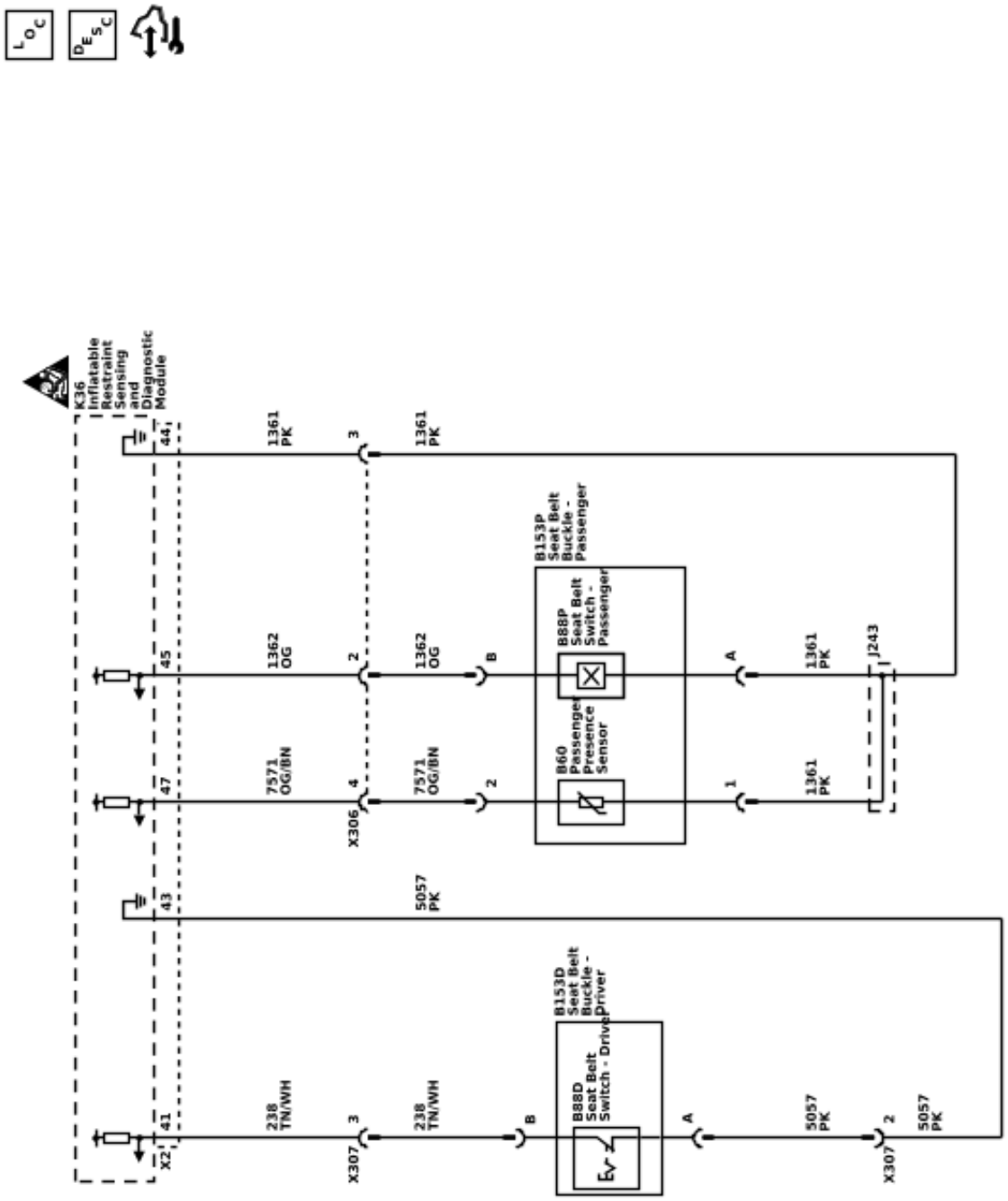

Diagnostic Information and Procedures

Seat Belt Guide Adjuster Stuck in Full Down Position

Seat Belt Guide Adjuster Stuck in Full Down Position

Cause	Correction
Definition: This potential condition will not impact the designed performance or reliability of the vehicle.	
If equipped, the seat belt guide adjuster cannot be raised because the seat belt is locked. This may occur if the seat belt guide adjuster is activated too quickly.	If this condition occurs, pull the seat belt out **51 to 76 mm (2 to 3 in)**, or to full extension if necessary, with moderate force and then allow the seat belt to retract before attempting to raise the seat belt guide adjuster again. Repeat if necessary.

Seat Belt Retractor Does Not Function Properly or is Inoperative - Automatic Locking Retractor

Seat Belt Retractor Does Not Function Properly or is Inoperative – Automatic Locking Retractor

Cause	Correction
Definition: Do not replace the seat belt retractor for these conditions until first attempting to disengage the locking mechanism by reviewing the potential causes and the corrections listed below. Seat belts equipped with ALR are commonly found on front and rear passenger seating positions.	
Automatic Locking Retractor (ALR) When the seat belt is pulled out to full extension, it automatically converts the seat belt retractor into a cinch-down mode (i.e. ALR) which causes the seat belt to lock. This is typically used to tightly secure a child seat to the vehicle. Inadvertent activation of the ALR may occur if the seat belt is pulled out to full extension during regular operation.	The ALR mode of operation is automatically cancelled when the seat belt is released and returned to its stowed position. This is the designed intent and indicates the seat belt is functioning properly.
Inadvertent activation of the seat belt retractor ALR system may also occur with the use of a seat belt extender.	Ensure the seat belt extender is appropriately sized for the vehicle and seating position.
Performance Vehicles The ALR locking mode is also provided at the driver's position of some performance vehicles, as a unique feature. With the ALR active, the operator is snugly cinched into the seat and kept firmly in place during high G-force driving maneuvers.	The ALR mode of operation is automatically cancelled when the seat belt is released and returned to its stowed position. This is the designed intent and indicates the seat belt is functioning properly.

Seat Belt Retractor Does Not Function Properly or is Inoperative - Overspool Lock

Seat Belt Retractor Does Not Function Properly or is Inoperative – Overspool Lock

Cause	Correction
Definition: Do not replace the seat belt retractor for these conditions until first attempting to disengage the locking mechanism by reviewing the potential causes and the corrections listed below.	
Overspool Lock The seat belt retractor may exhibit an unintentional locking condition if the seat belt retracts to the stowed position too rapidly. This may also occur if the seat belt guide adjuster (if equipped) is activated too quickly or while rapidly folding a seat up or down. This may result in the seat belt retractor locking with the seat belt fully stowed.	If this condition occurs, pull the seat belt out **51 to 76 mm (2 to 3 in)**, or to full extension if necessary, with moderate force and then allow the seat belt to retract before attempting to use the seat belt again. Repeat if necessary.
Rear Seat with Integrated Seat Belt Retractor This condition may also exist on vehicles with seat belts integrated into the rear seat back and may present itself as a seat back locked in the folded down position.	Pull up on the seat back with moderate force as far as it will go, and then push all the way down on the seat back before attempting to raise the seat back again. Repeat if necessary.

Seat Belt Retractor Does Not Function Properly or is Inoperative - Vehicle Sensing

Seat Belt Retractor Does Not Function Properly or is Inoperative – Vehicle Sensing

Cause	Correction
Definition: Do not replace the seat belt retractor for these conditions until first attempting to disengage the locking mechanism by reviewing the potential causes and the corrections listed below.	
This type of intermittent locking occurs in response to the vehicle under the following conditions: 1. The vehicle changes speed or direction abruptly (the vehicle goes into rapid acceleration, deceleration, or aggressive cornering). 2. When the vehicle is parked on an incline (fore-aft or side-to-side). 3. Rough road conditions where the seat belt retractor sensor mechanism is bounced into a locked condition. In all of these conditions, as long as tension is maintained on the seat belt, the seat belt retractor will stay locked. When tension is released, the seat belt retracts slightly, the lock bar disengages, and the seat belt should return to normal function.	This is a normal operating characteristic of the seat belt retractor system. This is the designed intent and indicates the seat belt is functioning properly.

Seat Belt Retractor Does Not Function Properly or is Inoperative - Belt Sensing

Seat Belt Retractor Does Not Function Properly or is Inoperative – Belt Sensing

Cause	Correction
Definition: Do not replace the seat belt retractor for these conditions until first attempting to disengage the locking mechanism by reviewing the potential causes and the corrections listed below.	
The seat belt retractor may lock intermittently in response to a rapid extraction of the seat belt during use. When the seat belt reels out at an accelerated rate and maintains tension, the seat belt retractor goes into a lock mode until tension is released.	This is a normal operating characteristic of the seat belt retractor system. This is the designed intent and indicates the seat belt is functioning properly.

Seat Belt Retractor Does Not Function Properly or is Inoperative - Belt Twisting

Seat Belt Retractor Does Not Function Properly or is Inoperative – Belt Twisting

Cause	Correction
Definition: Do not replace the seat belt retractor for these conditions until first attempting to disengage the locking mechanism by reviewing the potential causes and the corrections listed below.	
When there is a twist in the seat belt behind the opening in the trim panel or seat back, it may prevent smooth operation of the seat belt. 5661748 1. Seat belt twisting at or before the seat belt retractor guide.	Remove the necessary trim panels and/or seat belt bezels and inspect for seat belt twisting. The twist may be visible outside of the seat belt retractor or it may be found on the seat belt retractor. If a twist is found, attempt to correct it and reinstall the seat belt properly and without twists.

Cause	Correction
 5661773 2. Seat belt twisting on the seat belt retractor. 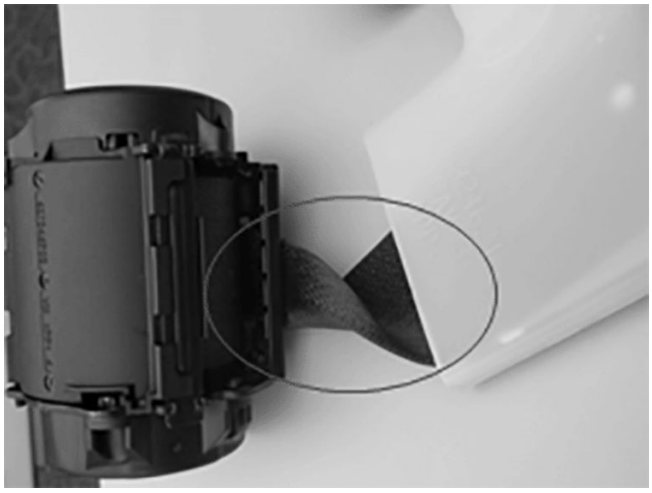 4960937 3. Center seat belt twisting.	

Seat Belt Retractor Does Not Function Properly or is Inoperative - Guide Contamination

Seat Belt Retractor Does Not Function Properly or is Inoperative – Guide Contamination

Cause	Correction
Definition: Do not replace the seat belt retractor for these conditions until first attempting to disengage the locking mechanism by reviewing the potential causes and the corrections listed below.	
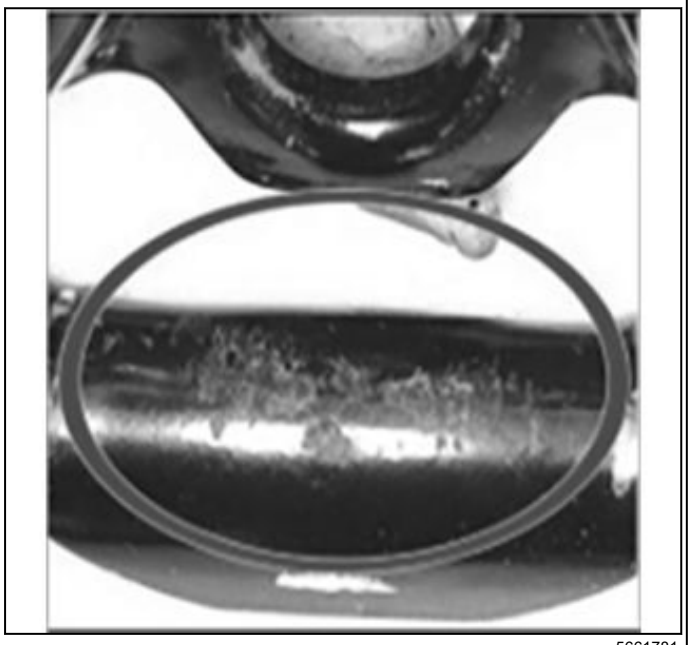 5661781 Slow return of the seat belt into the seat belt retractor may occur due to contamination build up on the seat belt retractor guide. Contamination buildup is primarily from external sources such as skin, make-up, clothing fibers, sunscreen, or soap.	Perform the seat belt retractor guide cleaning procedure. **Seat Belt Guide Loop Cleaning**

Noise Heard from Motorized Seat Belt Retractor

Noise Heard from Motorized Seat Belt Retractor

Cause	Correction
Definition: Do not replace the seat belt retractor for this condition until first verifying the source.	
Auto-tightening seat belt retractors will make an audible motor noise during seat belt tightening and release operations for 2-3 seconds after the event.	This condition is a normal operating characteristic of the motorized seat belt system. It will not impact the designed performance or reliability of the vehicle.

Seat Belt Buckle Does Not Function Properly and/or Seat Belt Warning Lamp Illuminated

Seat Belt Buckle Does Not Function Properly and/or Seat Belt Warning Lamp Illuminated

Cause	Correction
Solid or Liquid Contamination A contaminant may have been spilled onto or into the seat belt buckle causing the seat belt buckle to not latch or unlatch properly and potentially illuminating the seat belt warning light. Other foreign debris from food, candy wrappers, paper, or coins may also contribute to this condition.	**Caution:** Do not insert anything other than the seat belt latch plate into the seat belt buckle. Do not attempt to remove debris from the seat belt buckle with a tool. Do not try to wash out a seat belt buckle to remove a contaminant. Damage to the seat belt buckle may occur if any of these options are used. 1. Inspect the seat belt buckle for any contaminants or debris with a light shining on the latch plate insertion area. 2. If any contaminants or debris are observed, try to vacuum out the item(s). After the contaminants or debris is removed, latch and unlatch the seat belt. If the system functions properly, do not replace the seat belt buckle. 3. If the condition has not been corrected, inspect the seat belt buckle for further contaminants. If further contamination is found, replace the seat belt buckle. 4. If further diagnosis is required, continue with the seat belt system inspection. [Link target (target-id 56800-) not found]

Repair Instructions

Seat Belt Repairs and Inspections Required After a Collision

Warning: Restraint systems can be damaged in a collision. To help avoid injury and ensure that all parts in need of replacement are replaced:

- ***Replace any seat belt system that was in use during the collision serious enough to deploy any automatic restraint device such as air bags and seat belt pretensioners. This not only includes seat belt systems in use by people of adult size, but seat belt systems used to secure child restraints, infant carriers and booster seats, including LATCH system and top tether anchorages.***
- ***Replace any seat belt system that has torn, worn, or damaged components. This not only includes adult seat belt systems, but built-in child restraints and LATCH system components, if any.***
- ***Replace any seat belt system if you observe the words "REPLACE" or "CAUTION", or if a yellow tag is visible. Do not replace a seat belt if only the child seat caution label is visible.***
- ***Replace any seat belt system if you are doubtful about its condition. This not only includes adult seat belt systems, but built-in child restraints, LATCH system components, and any restraint system used to secure infant carriers, child restraints, and booster seats.***

  Do NOT replace single seat belt system components in vehicles that have been in a collision as described above. Always replace the entire seat belt system with the buckle, guide and retractor assembly, which includes the latch and webbing material.

After a minor collision where no automatic restraint device was deployed, seat belt system replacement may not be necessary, unless some of the parts are torn, worn, or damaged.

Seat Belt Retractor Guide Cleaning

Warning: Do not use any liquid cleaners, solvents, sandpaper, steel wool, or Scotch Brite pads to clean the seat belt retractor guide. These materials will damage the seat belt retractor guide and contaminate the seat belt retractor with liquid or metal shavings, which could result in a seat belt malfunction or personal injury.

Cleaning Procedure

5661783

1. With the key in the off position, lift the seat belt up to expose the seat belt retractor guide.

5661788

Note:

- Use the hook side of hook and loop material or equivalent.
- The hook material should be plastic. DO NOT use metal hook and loop material. DO NOT use the loop side during this procedure.

2. Using the plastic hook side of a hook and loop material strip, gently rub the seat belt retractor guide and remove the contamination buildup.

5661789

3. Slightly move the seat belt to one side of the seat belt retractor guide and continue to gently clean the guide surface.

5661791

4. Slightly move the seat belt to the other side of the seat belt retractor guide and continue to gently clean the guide surface.

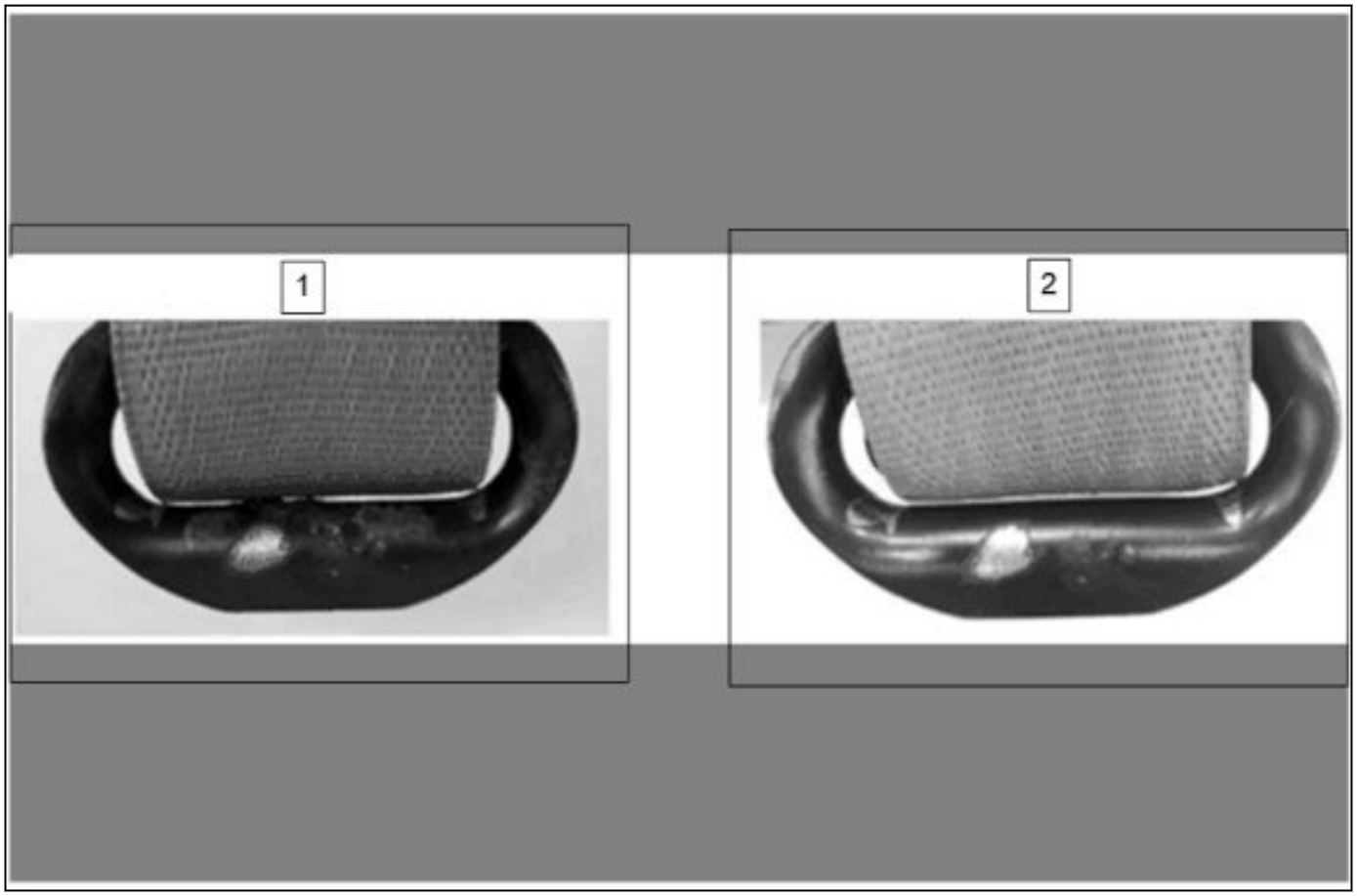

6887047

5. Verify that seat belt contamination buildup (1) has been removed and cleaning is complete (2).

Seat Belt Latch Stop Installation

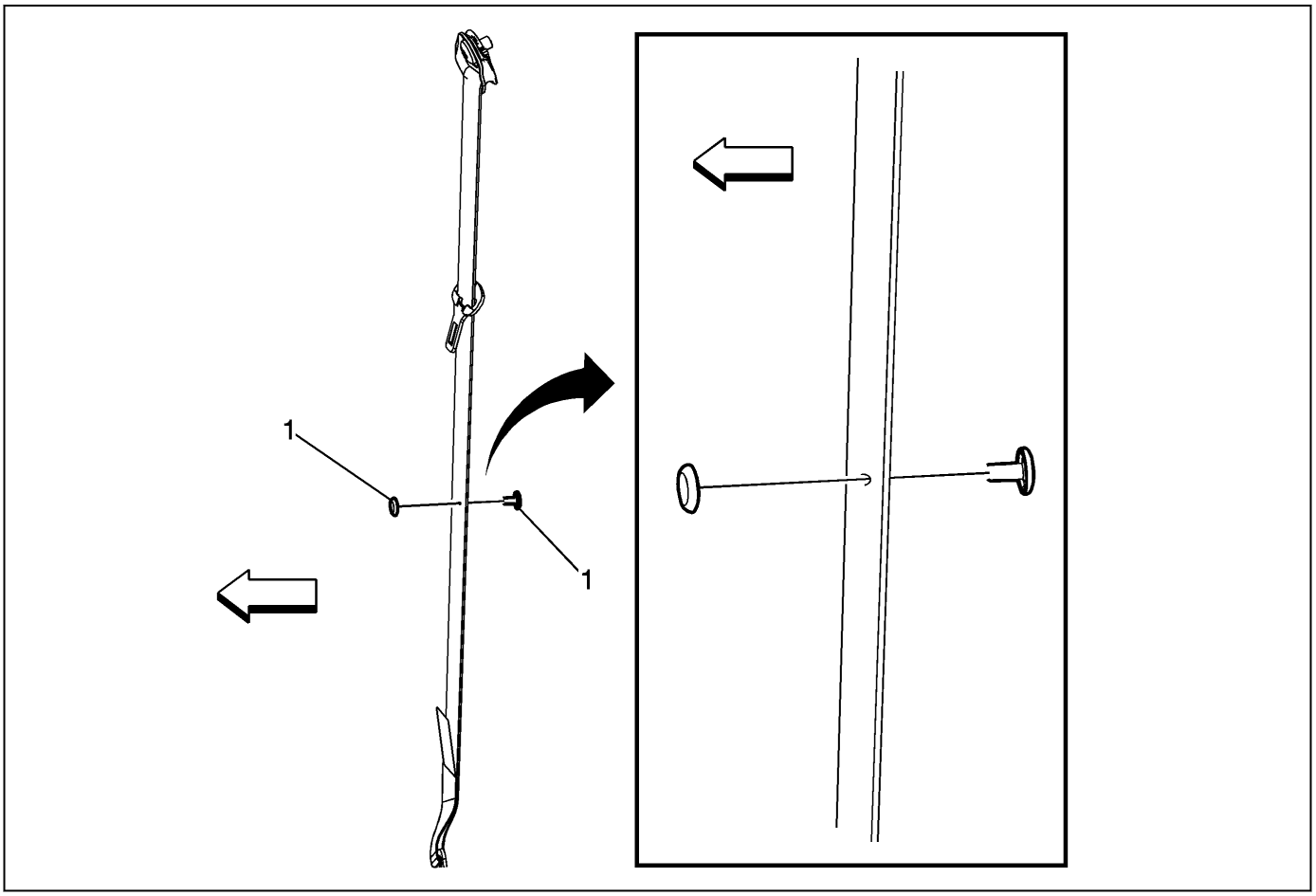

1923784

Seat Belt Latch Stop Installation

Callout	Component Name
Preliminary Procedure 1. Locate the hole in the seat belt webbing where the original seat belt stop button was located. 2. If the original hole in the seat belt webbing is not visible, perform the following: • If either the right or left stop button is missing use the opposing seat belt as a reference. • With the opposing seat belt fully stowed, measure the distance between the seat belt lower anchor and the stop button. • Using the measurement obtained above, measure and mark the location of the missing stop button on the center of the seat belt webbing. 3. Ensure the seat belt latch plate is located above the mark or original hole.	
1	Seat Belt Stop Button **Procedure** 1. Work the male half of the stop button through the hole in the webbing or at the marked location. 2. Align the female half of the stop button with the male half of the stop button. 3. Snap the two halves together. 4. Trim off any access of the male half of the stop button flush with the female half of the stop button. **Tip:** Ensure the male half of the stop button is facing forward in the vehicle in order to ensure the stop button will not snag customers clothing.

Rear Seat Buckle Side Belt Replacement

4856108

Rear Seat Buckle Side Belt Replacement

Callout	Component Name
Preliminary Procedure Reposition the rear seat cushion cover and pad. [Link target (target-id 57024-) not found]	
1	Rear Seat Cushion Frame Bolt **Caution:** Refer to [Link target (target-id 178169-) not found] . **Tighten** 75 N•m (55 lb ft)
2	Rear Seat Buckle Side Belt

Rear Seat Center Buckle Side Belt Replacement

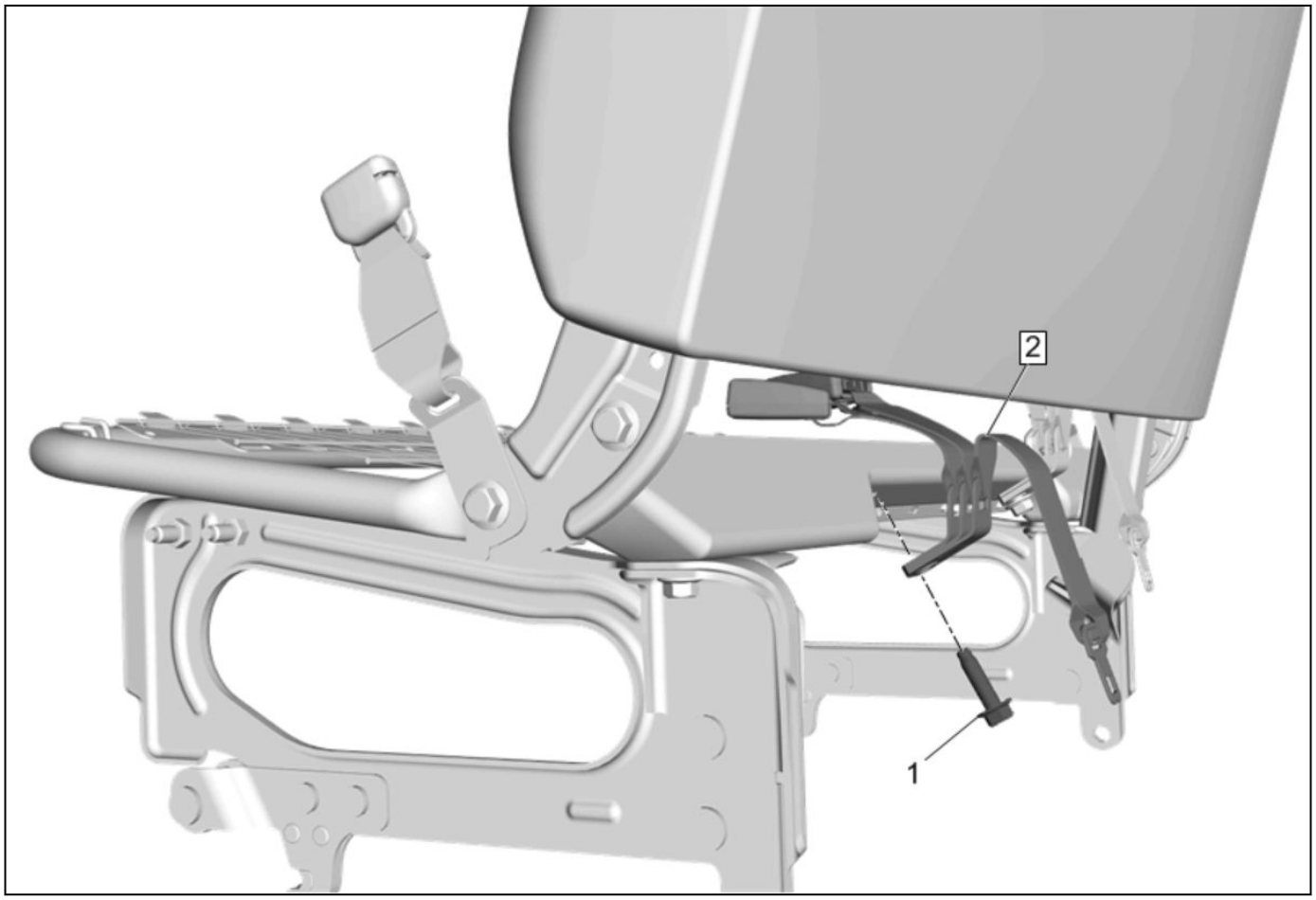

4856109

Rear Seat Center Buckle Side Belt Replacement

Callout	Component Name
Preliminary Procedure Reposition the rear seat cushion cover and pad. [Link target (target-id 57024-) not found]	
1	Rear Seat Cushion Frame Bolt **Caution:** Refer to [Link target (target-id 178169-) not found] . **Tighten** 75 N•m (55 lb ft)
2	Rear Seat Center Buckle Side Belt

Seat Belt Replacement - Center Rear (with Split Bench)

Removal Procedure

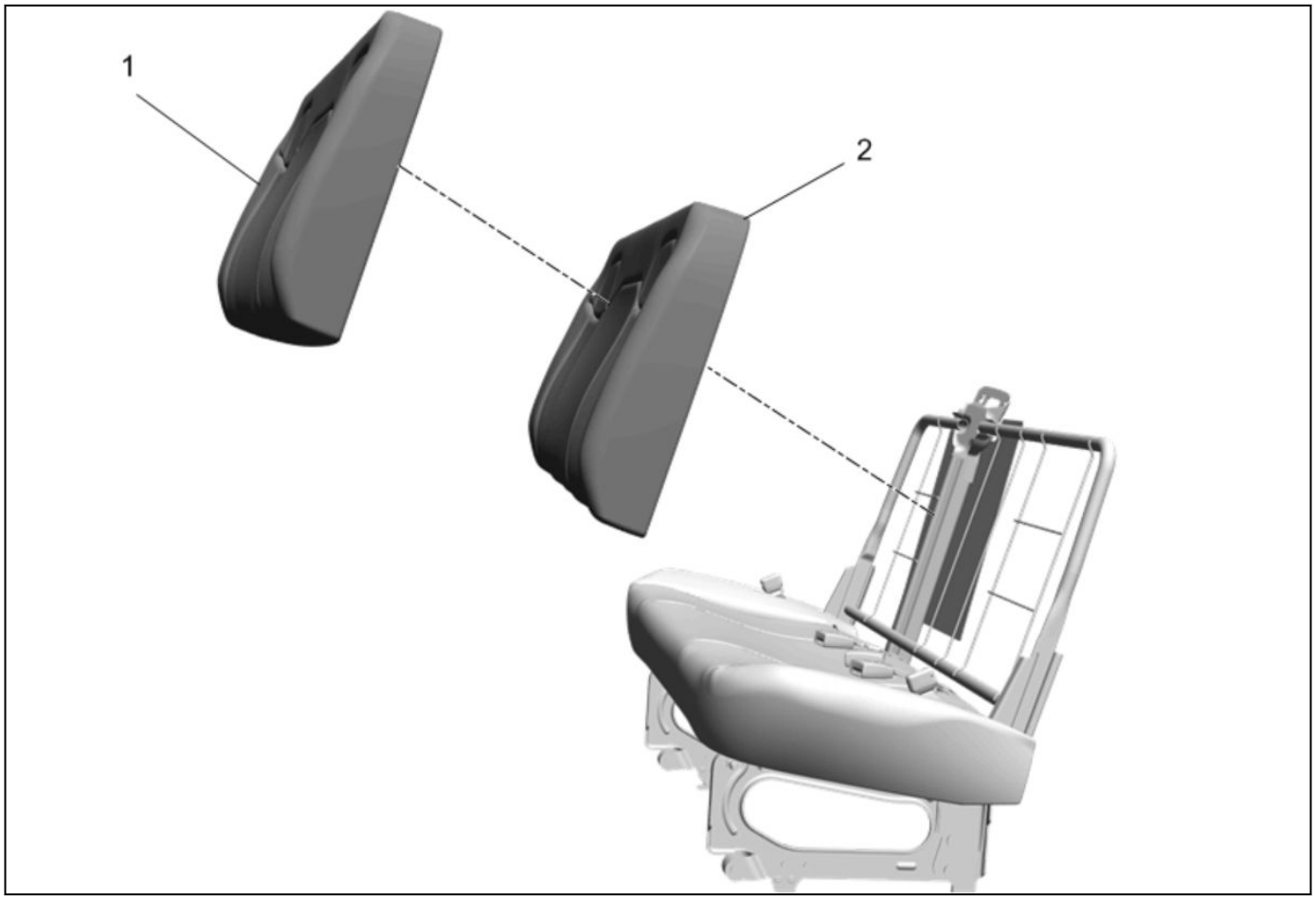

4854489

1. Rear Seat Back Cushion Cover and Pad (1, 2) » Remove— [Link target (target-id 57148-) not found]

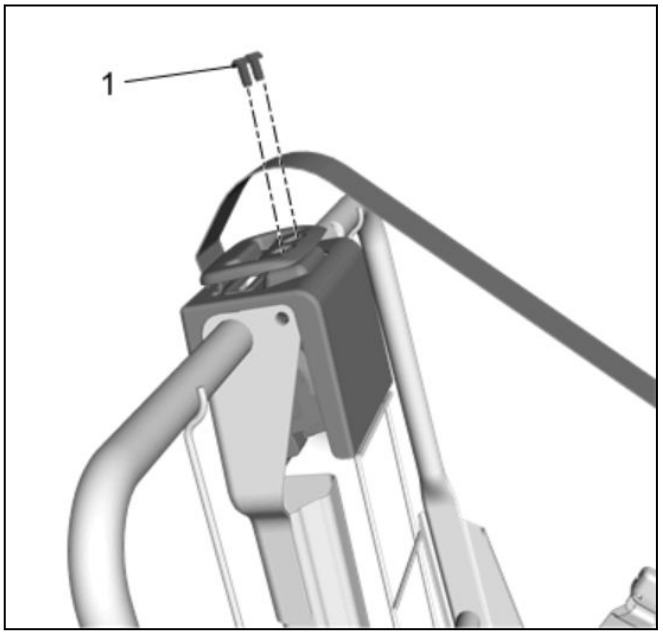

4867365

2. Rear Seat Belt Bezel Screw (1) » Remove[2x]

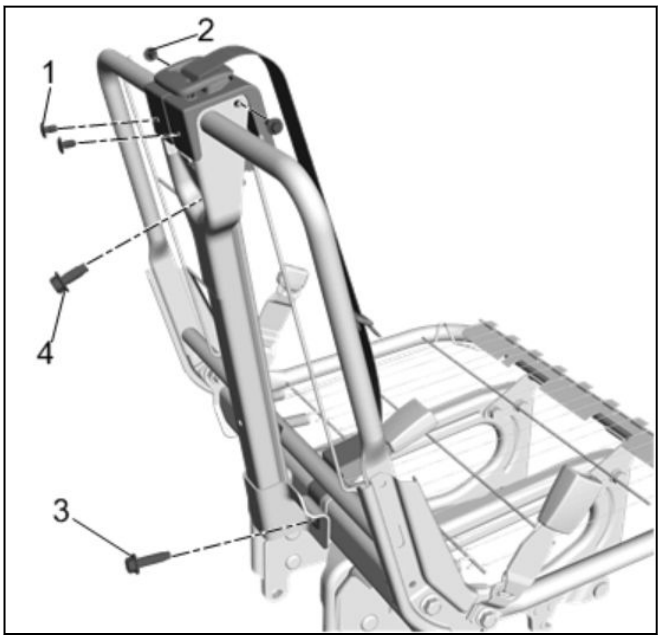

4867366

3. Rear Seat Retractor Cover Retainer (1) » Remove[2x]
4. Rear Seat Retractor Cover Screw (2) » Remove[2x]
5. Rear Seat Cushion Frame Bolt(3) » Remove— [Link target (target-id 75051-) not found]
6. Rear Seat Retractor Bolt - Upper (4) » Remove

4867367

7. Rear Seat Retractor Cover (2) » Remove
8. Center Rear Seat Belt (1) » Remove

Installation Procedure

4867367

1. Center Rear Seat Belt (1) » Install
2. Rear Seat Retractor Cover (2) » Install

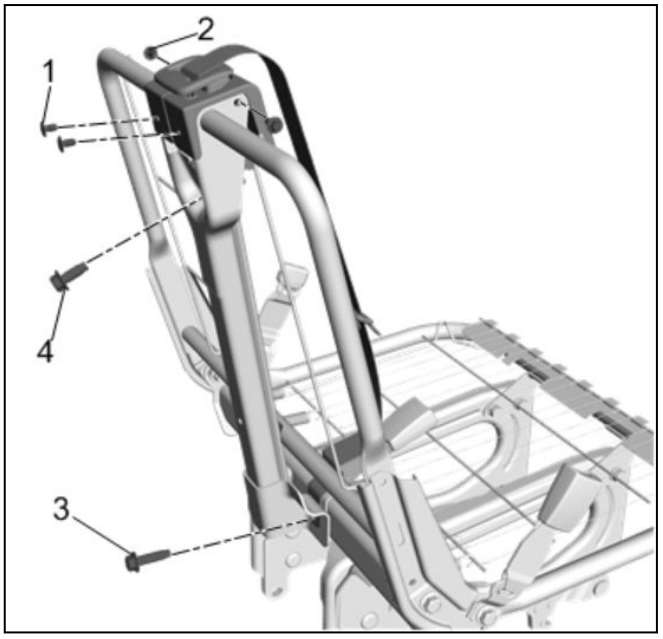

4867366

Caution: Refer to [Link target (target-id 178169-) not found] .

3. Rear Seat Retractor Bolt - Upper (4) » Install and tighten**52** N•m **(38 lb ft)**
4. Rear Seat Cushion Frame Bolt(3) » Install— [Link target (target-id 75051-) not found]
5. Rear Seat Retractor Cover Screw (2) » Install and tighten**2** N•m **(18 lb in)**[2x]
6. Rear Seat Retractor Cover Retainer (1) » Install[2x]

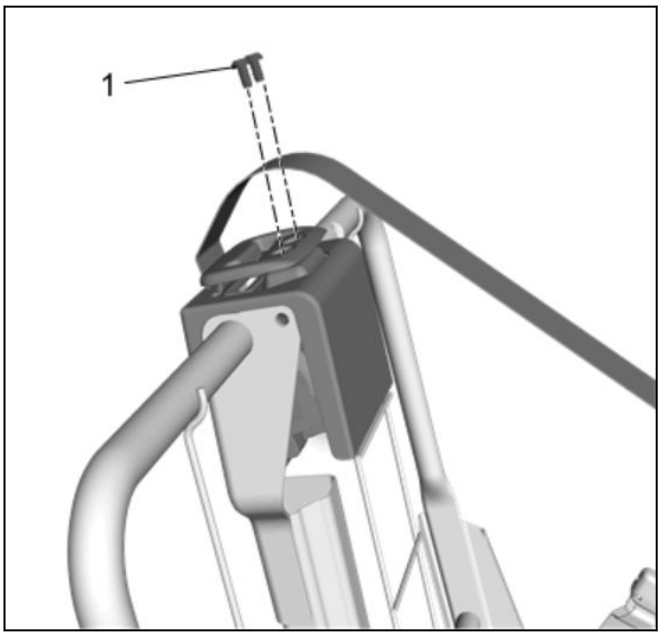

4867365

7. Rear Seat Belt Bezel Screw (1) » Install and tighten**2** N•m **(18 lb in)**[2x]

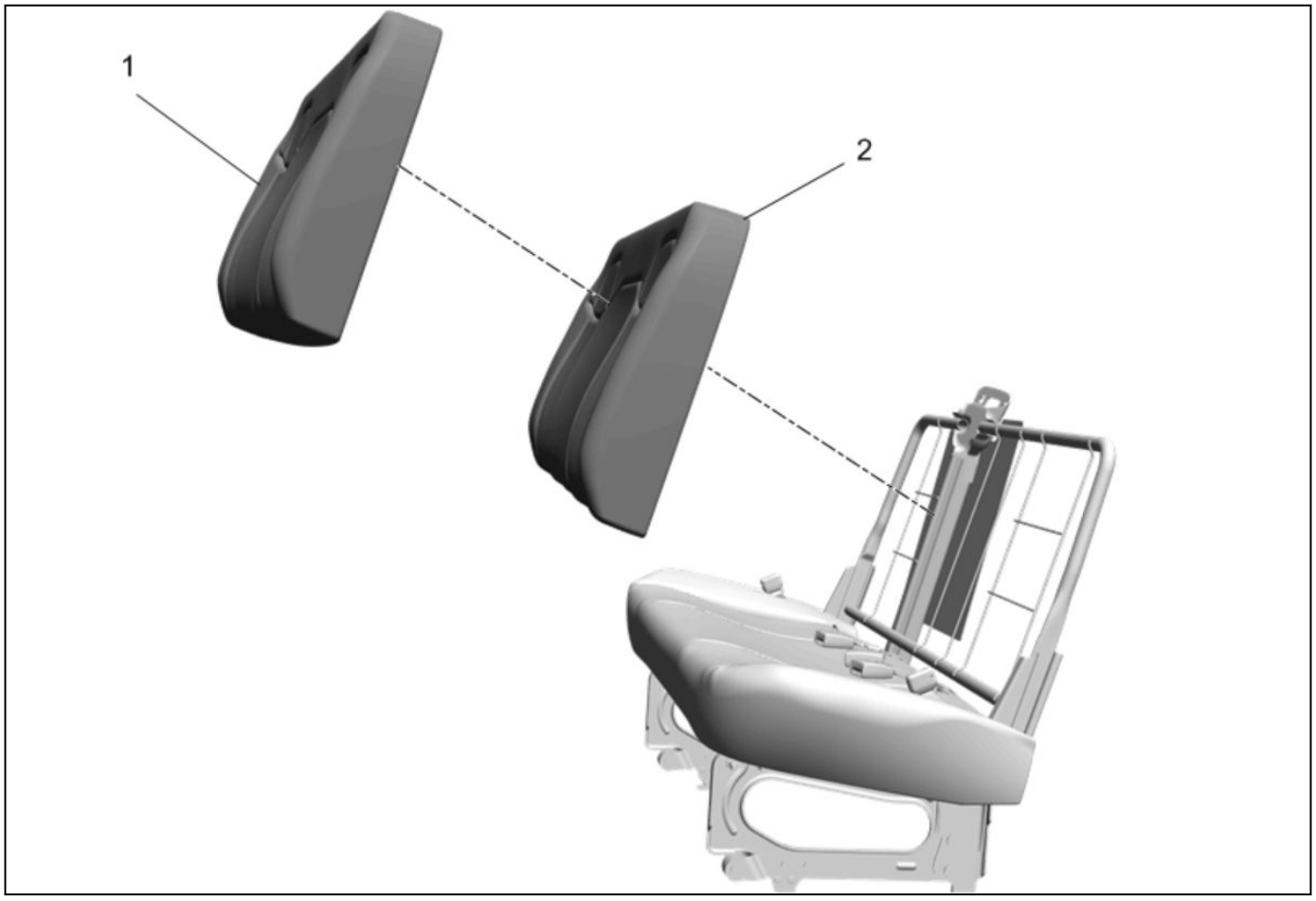

4854489

8. Rear Seat Back Cushion Cover and Pad (1, 2) » Install— [Link target (target-id 57148-) not found]

Seat Belt Height Adjuster Replacement - Front

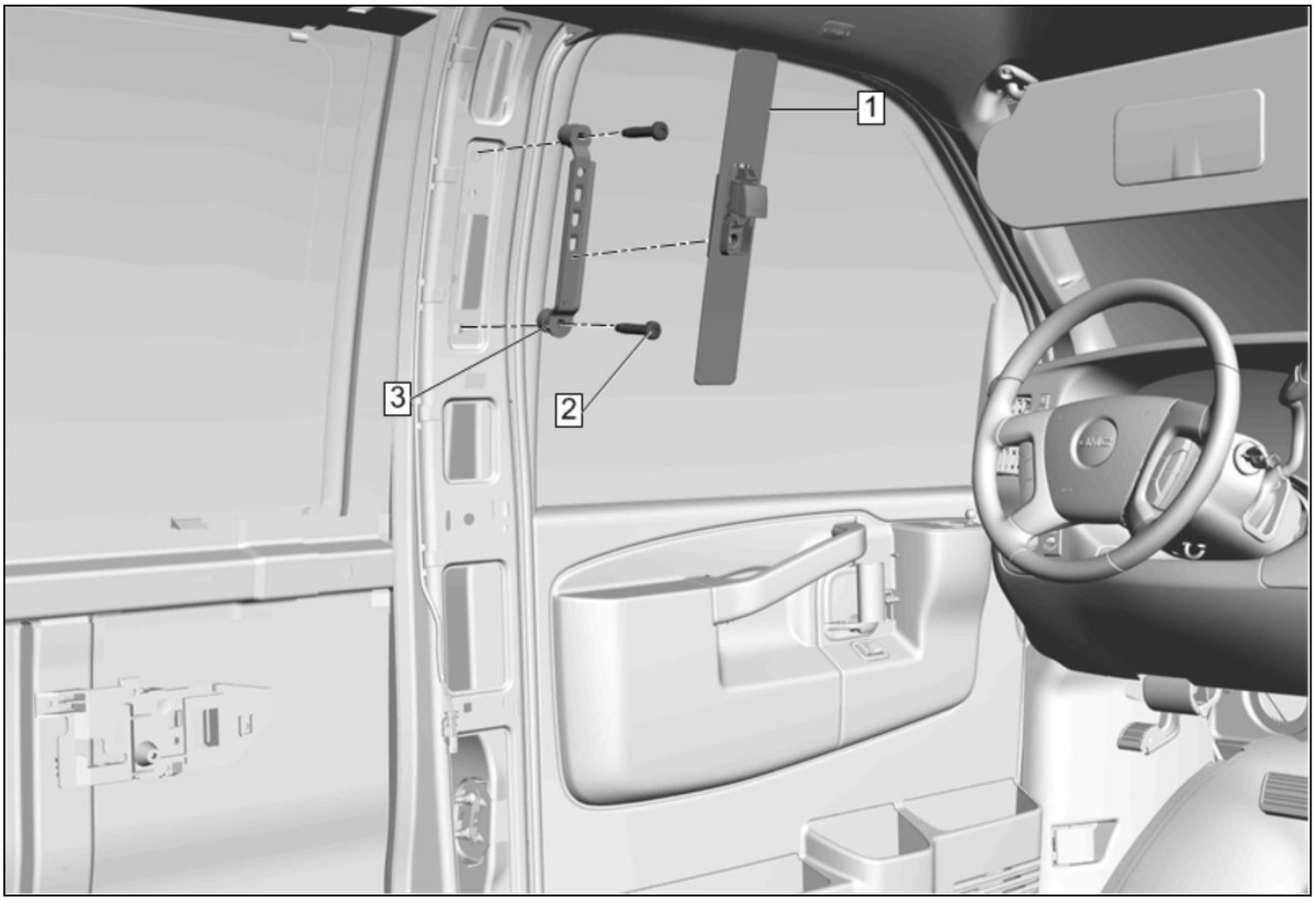

4861114

Seat Belt Height Adjuster Replacement - Front

Callout	Component Name
Preliminary Procedure Remove the appropriate upper pillar garnish molding. • For left side, refer to [Link target (target-id 51675-) not found] . • For right side, refer to [Link target (target-id 51741-) not found] .	
1	Front Seat Belt Adjuster Cover

Callout	Component Name
2	Seat Belt Height Adjuster Bolt [2x] **Caution:** Refer to [Link target (target-id 178169-) not found] . **Procedure** 1. Remove the seat belt height adjuster bolt. 2. A NEW or reused threaded component must have adhesive removed and reapplied. Perform the following steps before installation: . Loosen the adhesive from the external threads of the component using a nylon wheel/brush and clean it with brake cleaner or a similar solvent. . Thread the cleaned component into the internal mating threads and remove to loosen trapped cured adhesive. . Apply thread locking adhesive to the external threads of the component.*Adhesives, Fluids, Lubricants, and Sealers 6-9* . Ensure there are no gaps in the thread locking adhesive once applied to the component. **Tighten** 45 N•m (33 lb ft)
3	Seat Belt Height Adjuster

Front Seat Belt Retractor Replacement

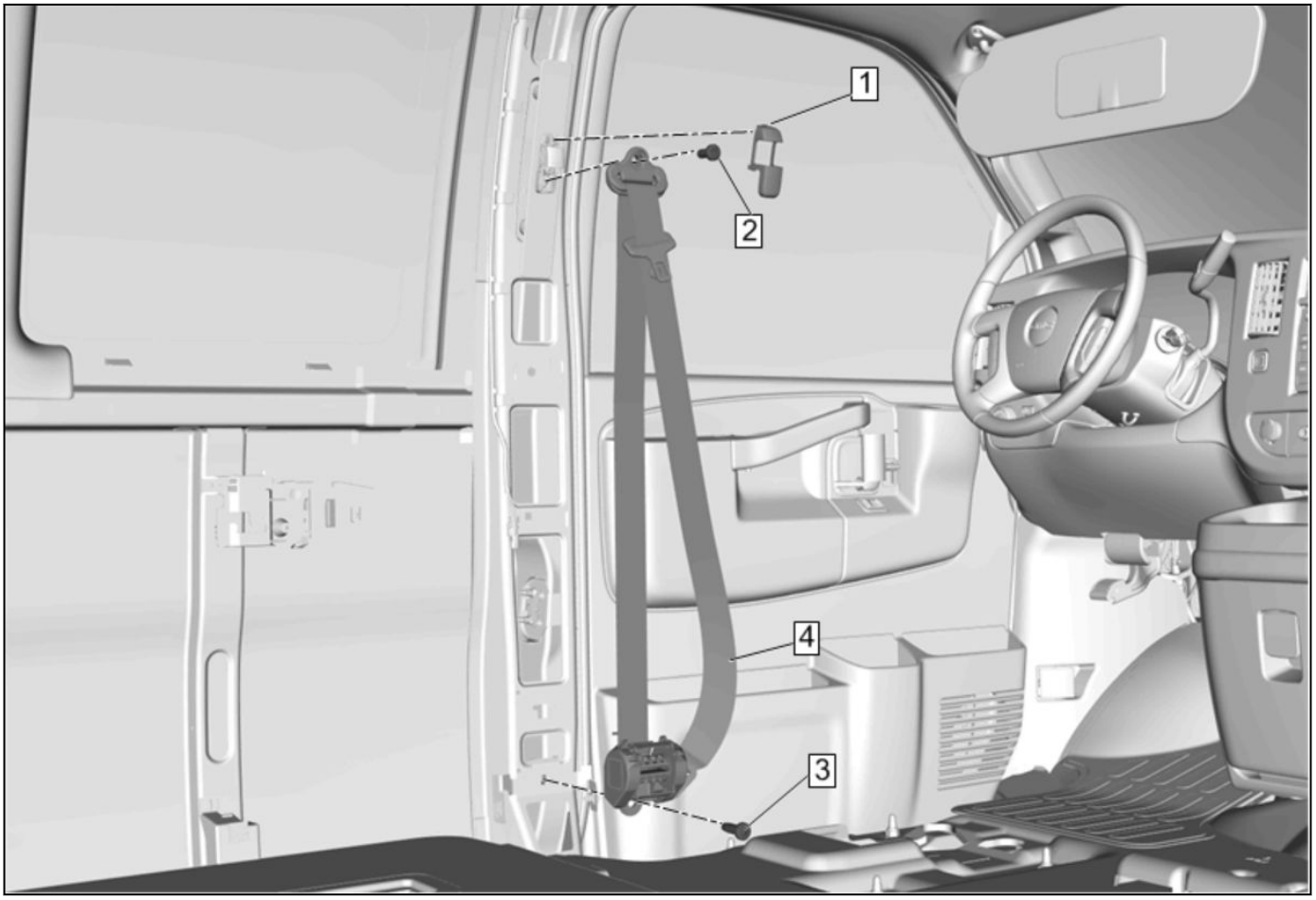

4861112

Front Seat Belt Retractor Replacement

Callout	Component Name
Preliminary Procedure Remove the appropriate garnish molding. • For left side, refer to [Link target (target-id 51619-) not found] . • For right side, refer to [Link target (target-id 51648-) not found] .	
1	Front Seat Belt Guide Cover
2	Front Seat Belt Guide Bolt **Caution:** Refer to [Link target (target-id 178169-) not found] . **Procedure** 1. Remove the front seat belt guide bolt. 2. A NEW or reused threaded component must have adhesive removed and reapplied. Perform the following steps before installation: . Loosen the adhesive from the external threads of the component using a nylon wheel/brush and clean it with brake cleaner or a similar solvent. . Thread the cleaned component into the internal mating threads and remove to loosen trapped cured adhesive. . Apply thread locking adhesive to the external threads of the component.*Adhesives, Fluids, Lubricants, and Sealers 6-9* . Ensure there are no gaps in the thread locking adhesive once applied to the component. **Tighten** 52 N•m (38 lb ft)
3	Front Seat Belt Retractor Bolt **Tighten** 52 N•m (38 lb ft)
4	Front Seat Belt Retractor

Rear Seat Retractor Side Belt Replacement (Back Row)

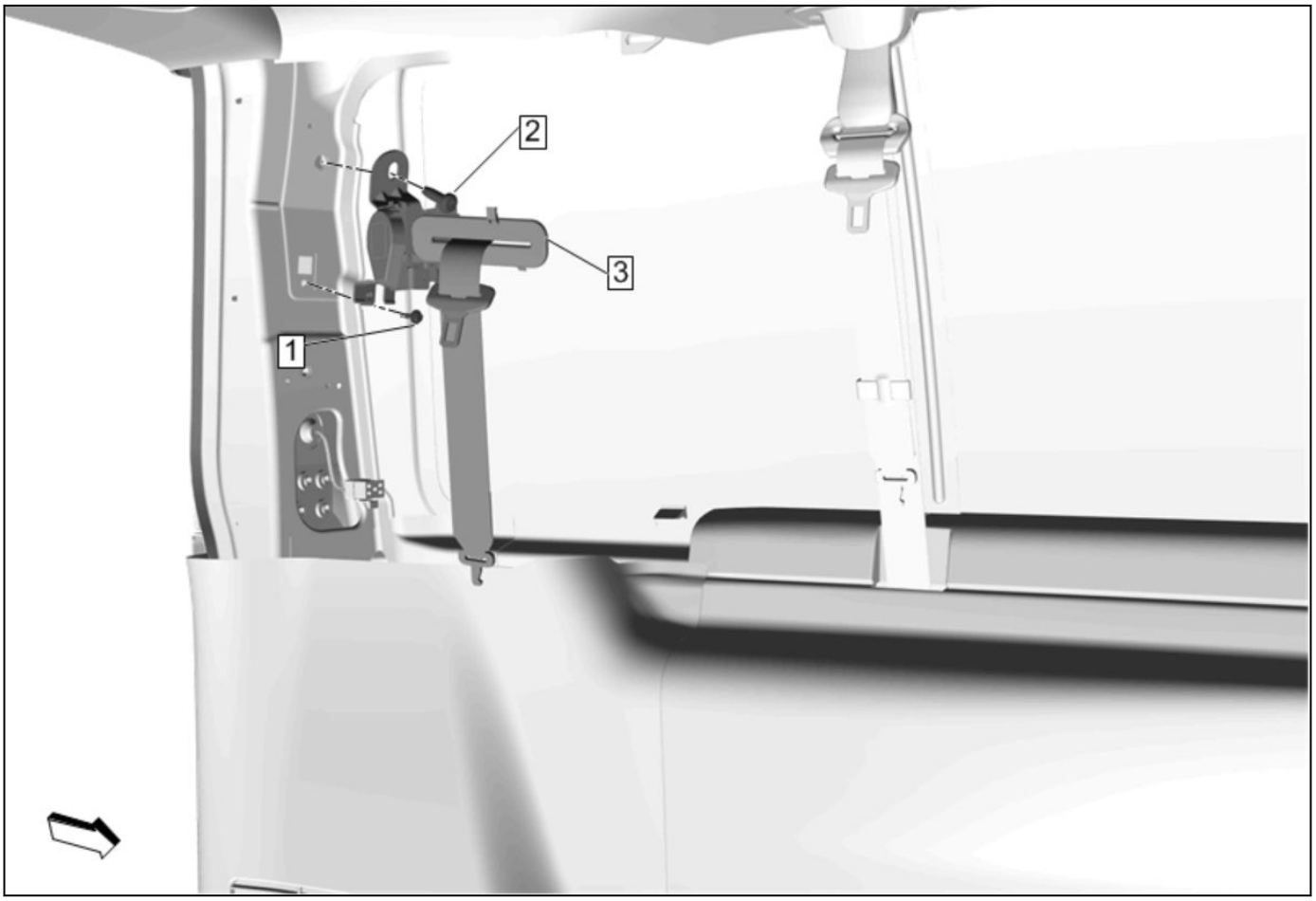

4857380

Rear Seat Retractor Side Belt Replacement (Back Row)

Callout	Component Name
Preliminary Procedure [Link target (target-id 51655-) not found]	
1	Rear Seat Belt Retractor Fastener **Caution:** Refer to [Link target (target-id 178169-) not found] . **Tighten** 10 N•m (89 lb in)
2	Rear Seat Belt Retractor Bolt - Upper **Tighten** 52 N•m (38 lb ft)
3	Rear Seat Retractor Side Belt

Rear Seat Retractor Side Belt Replacement (Middle Rows - Left Side)

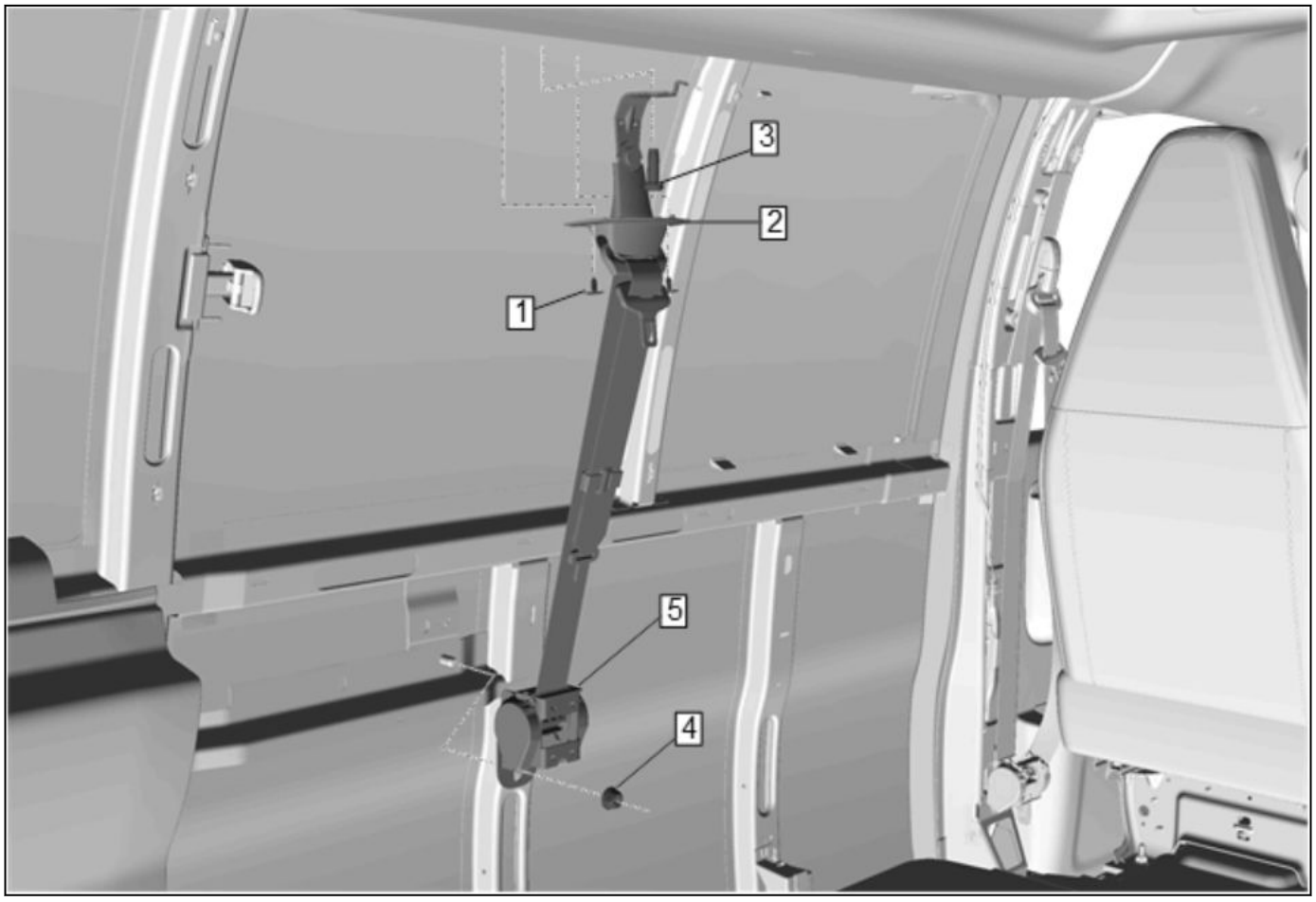

4857373

Rear Seat Retractor Side Belt Replacement (Middle Rows - Left Side)

Callout	Component Name
Preliminary Procedures 1. [Link target (target-id 313073-) not found] 2. Remove the appropriate body side trim panel. • For front rows, refer to [Link target (target-id 51619-) not found] . • For rear rows, refer to [Link target (target-id 51622-) not found] .	
1	Rear Seat Belt Guide Trim Cover Retainer [2x]
2	Rear Seat Belt Guide Trim Cover
3	Rear Seat Belt Retractor Bolt - Upper **Caution:** Refer to [Link target (target-id 178169-) not found] . **Tighten** 52 N•m (38 lb ft)
4	Rear Seat Belt Retractor Nut **Tighten** 52 N•m (38 lb ft)
5	Rear Seat Retractor Side Belt

Rear Seat Retractor Side Belt Replacement (Middle Rows - Right Side)

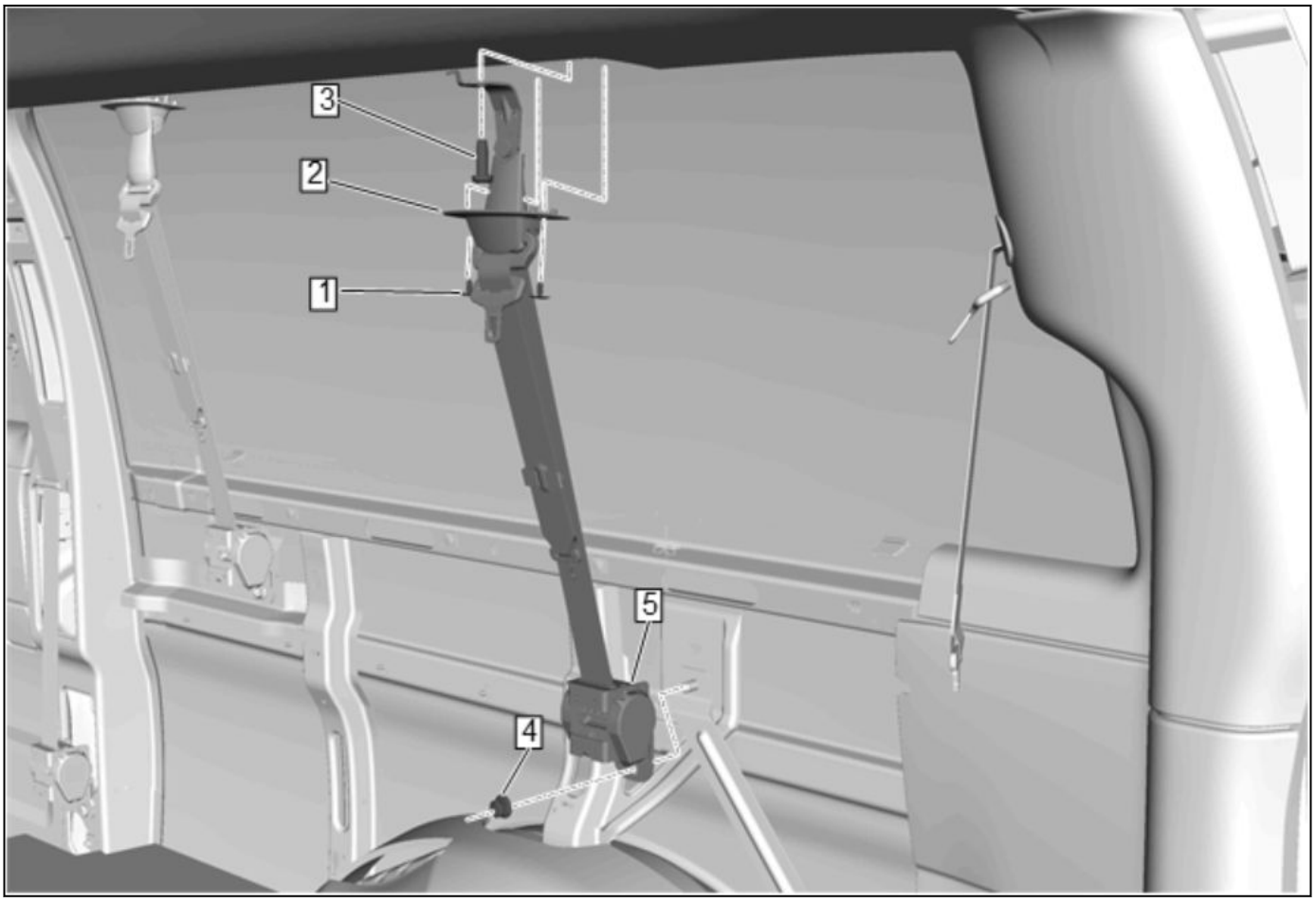

5151674

Rear Seat Retractor Side Belt Replacement (Middle Rows - Right Side)

Callout	Component Name
Preliminary Procedures 1. [Link target (target-id 313074-) not found] 2. [Link target (target-id 51623-) not found]	
1	Rear Seat Belt Guide Trim Cover Retainer [2x]
2	Rear Seat Belt Guide Trim Cover
3	Rear Seat Belt Retractor Bolt - Upper **Caution:** Refer to [Link target (target-id 178169-) not found] . **Tighten** 52 N•m (38 lb ft)
4	Rear Seat Belt Retractor Nut **Tighten** 52 N•m (38 lb ft)
5	Rear Seat Retractor Side Belt

Rear Seat Retractor Side Belt Replacement (2nd Row - Right Side)

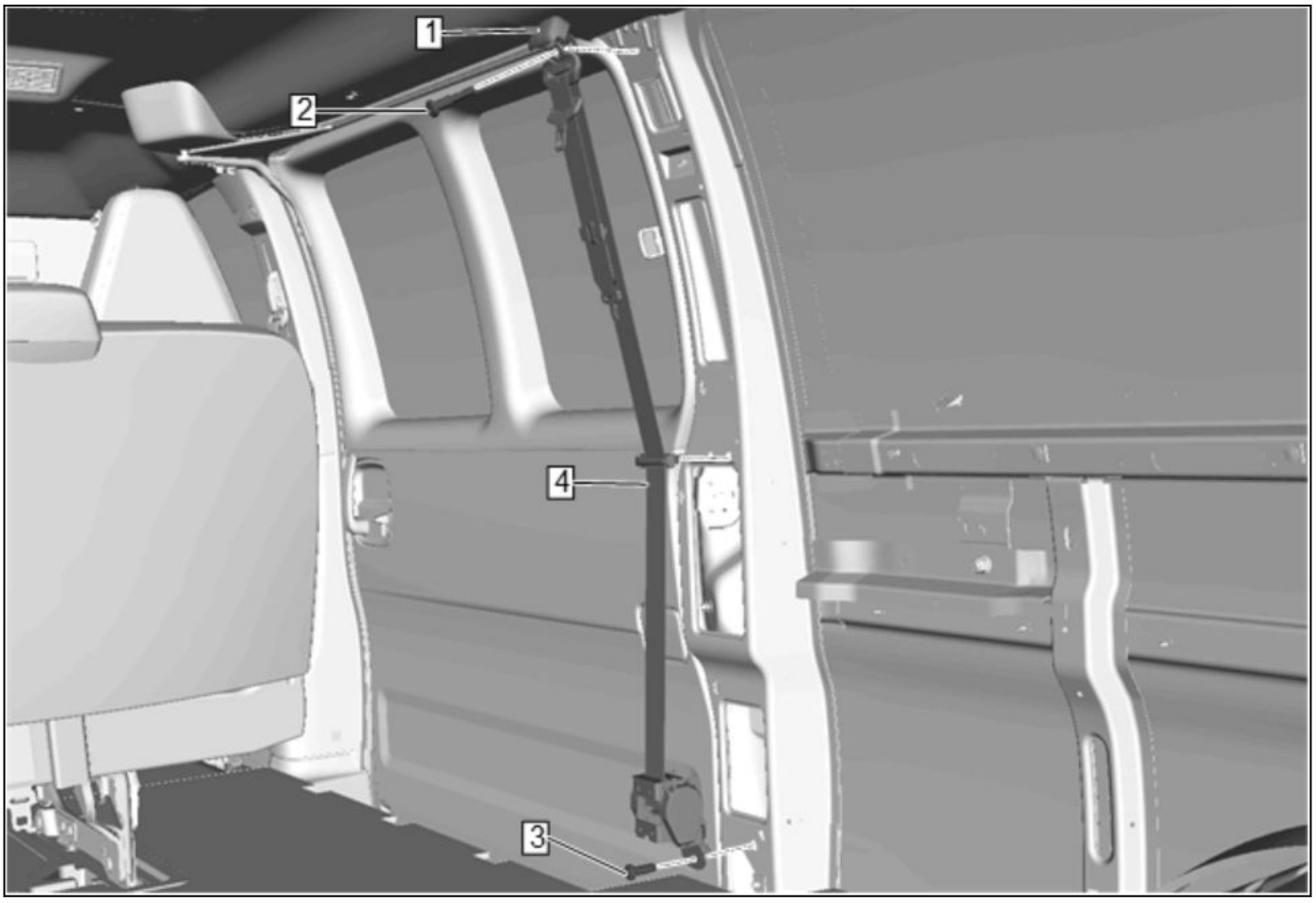

5152719

Rear Seat Retractor Side Belt Replacement (2nd Row - Right Side)

Callout	Component Name
Preliminary Procedure [Link target (target-id 51623-) not found]	
1	Rear Seat Belt D-Ring Cover
2	Rear Seat Shoulder Belt Bolt **Caution:** Refer to [Link target (target-id 178169-) not found] . **Tighten** 52 N•m (38 lb ft)
3	Rear Seat Belt Retractor Bolt **Tighten** 52 N•m (38 lb ft)
4	Rear Seat Retractor Side Belt

Rear Seat Center Retractor Side Belt Replacement

Removal Procedure

1. Rear Bench Seat » Remove— [Link target (target-id 56899-) not found]

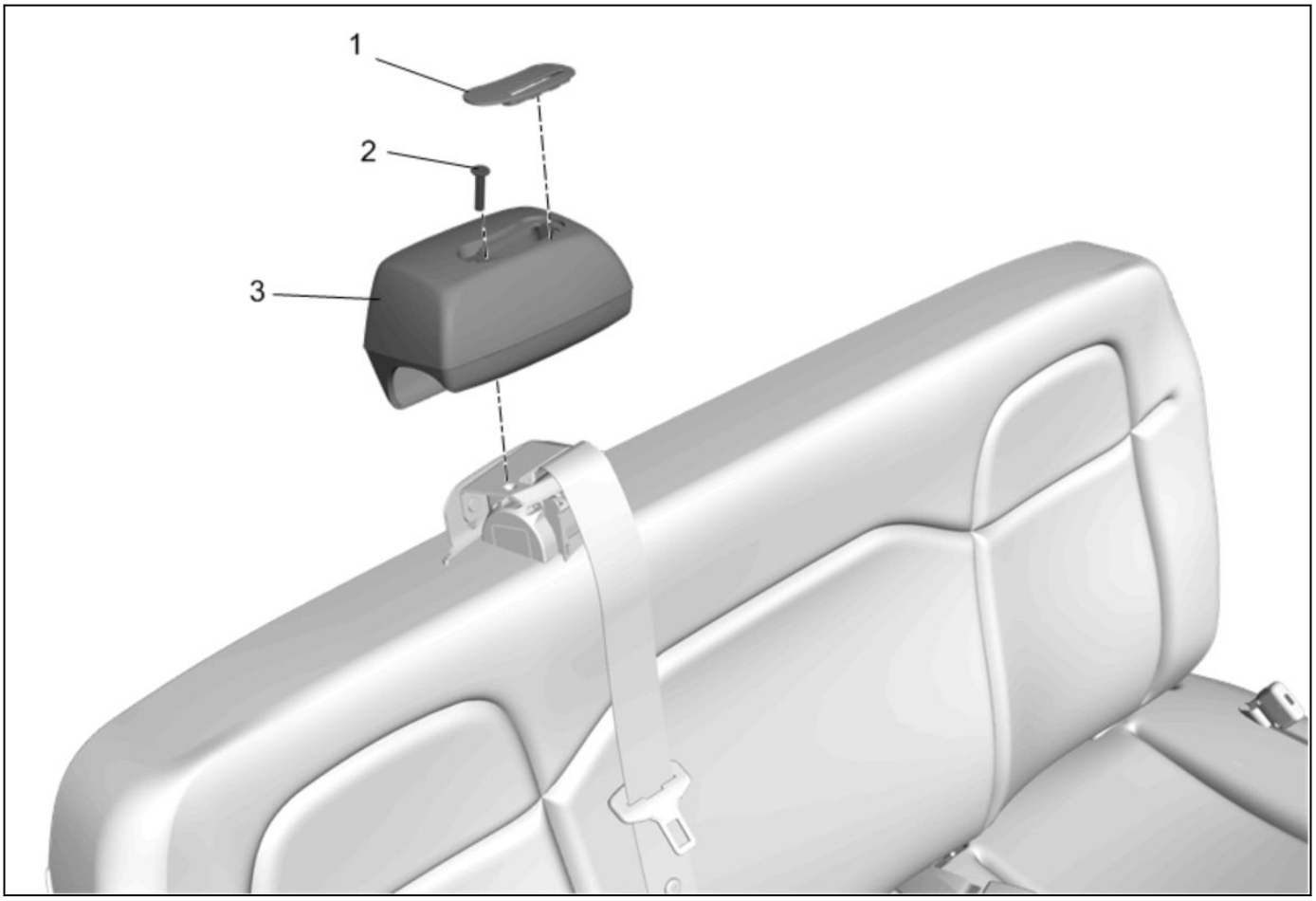

4854873

2. Rear Seat Retractor Housing Bezel (1) » Remove
3. Rear Seat Retractor Housing Screw (2) » Remove
4. Rear Seat Retractor Housing (3) » Remove

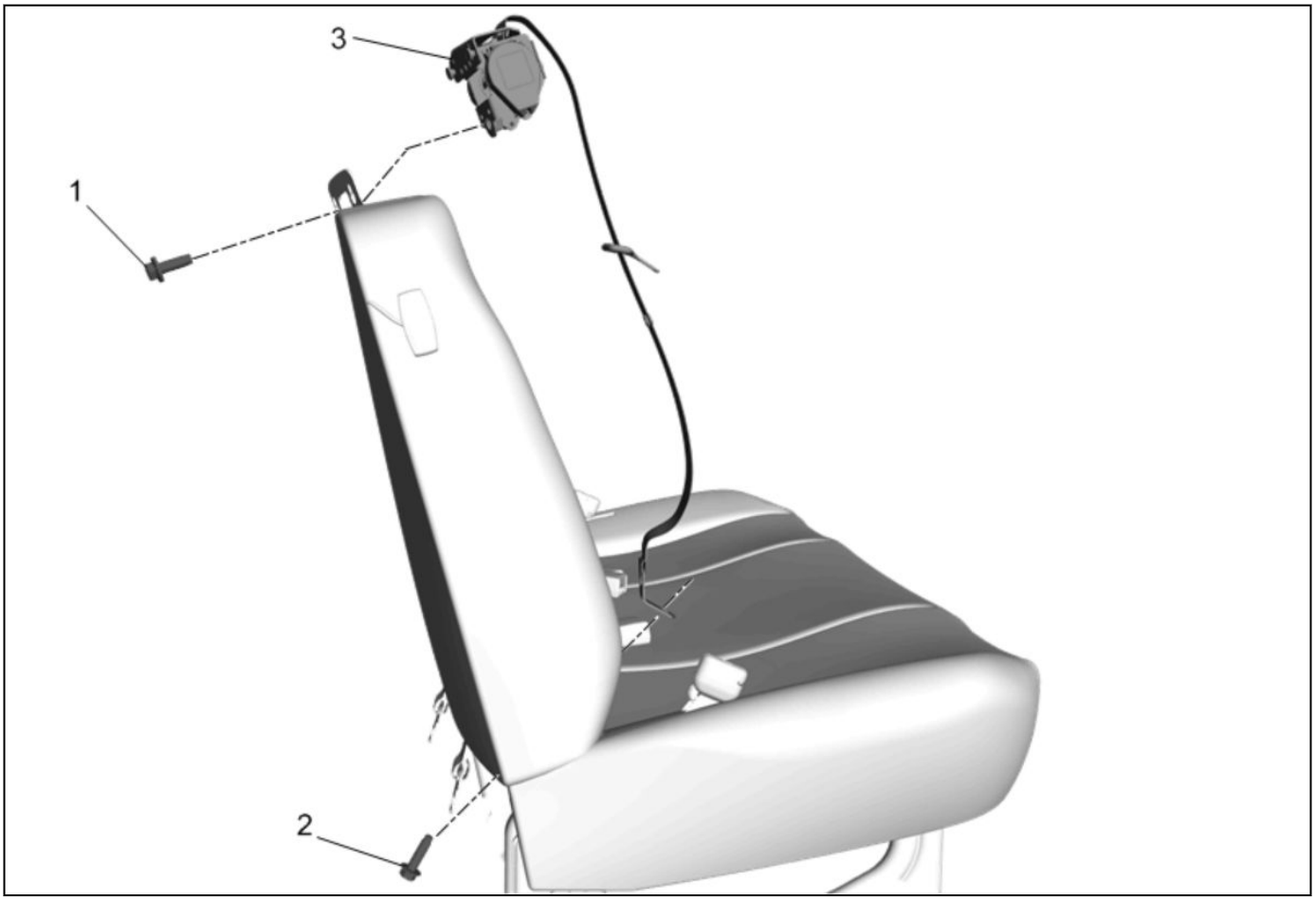

4854874

5. Rear Seat Retractor Bolt - Upper (1) » Remove
6. Rear Seat Retractor Bolt - Lower (2) » Remove
7. Rear Seat Center Retractor Side Belt (3) » Remove

Installation Procedure

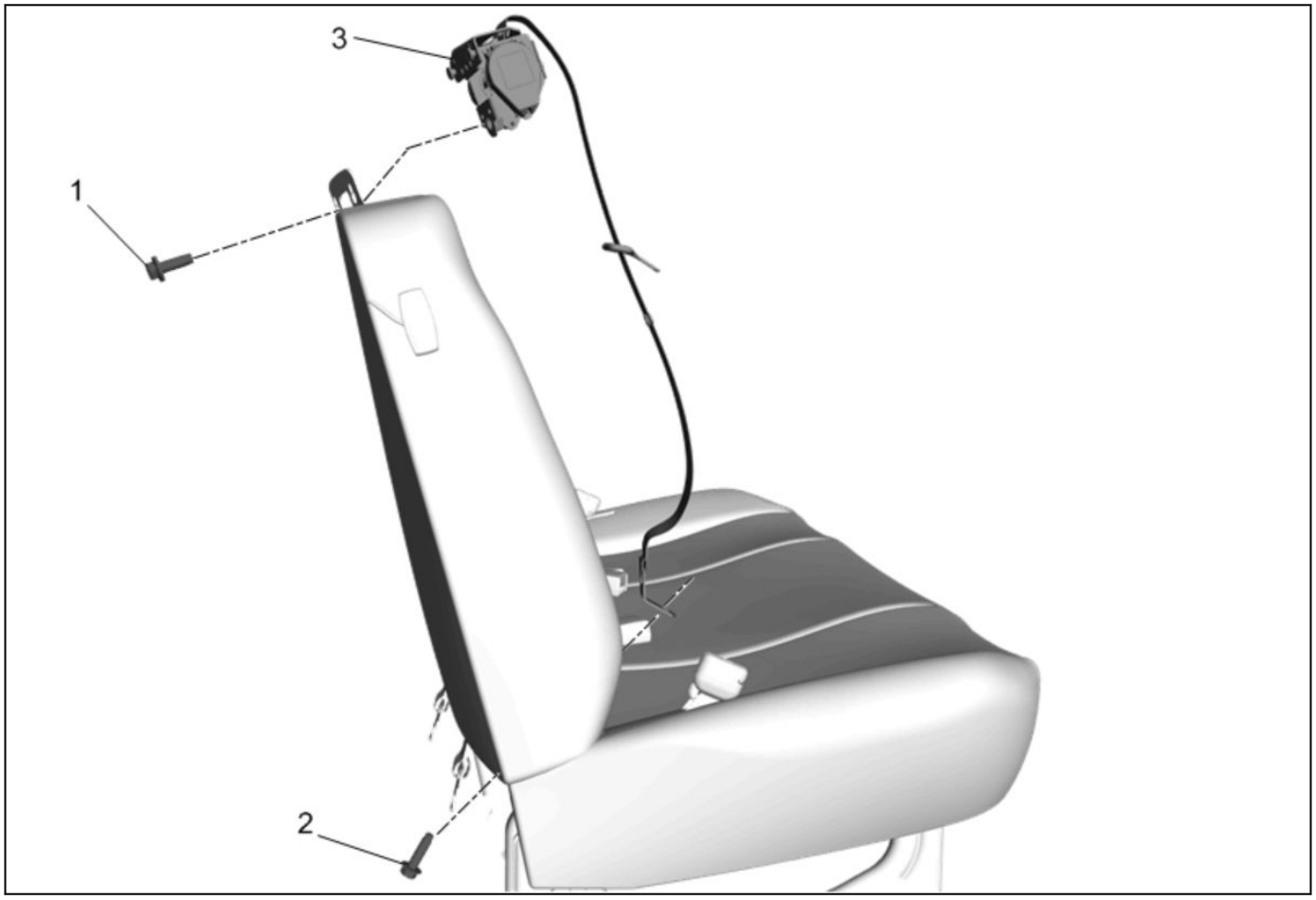

4854874

1. Rear Seat Center Retractor Side Belt (3) » Install

Caution: Refer to [Link target (target-id 178169-) not found] .

2. Rear Seat Retractor Bolt - Lower (2) » Install and tighten**52** N•m **(38 lb ft)**
3. Rear Seat Retractor Bolt - Upper (1) » Install and tighten**52** N•m **(38 lb ft)**

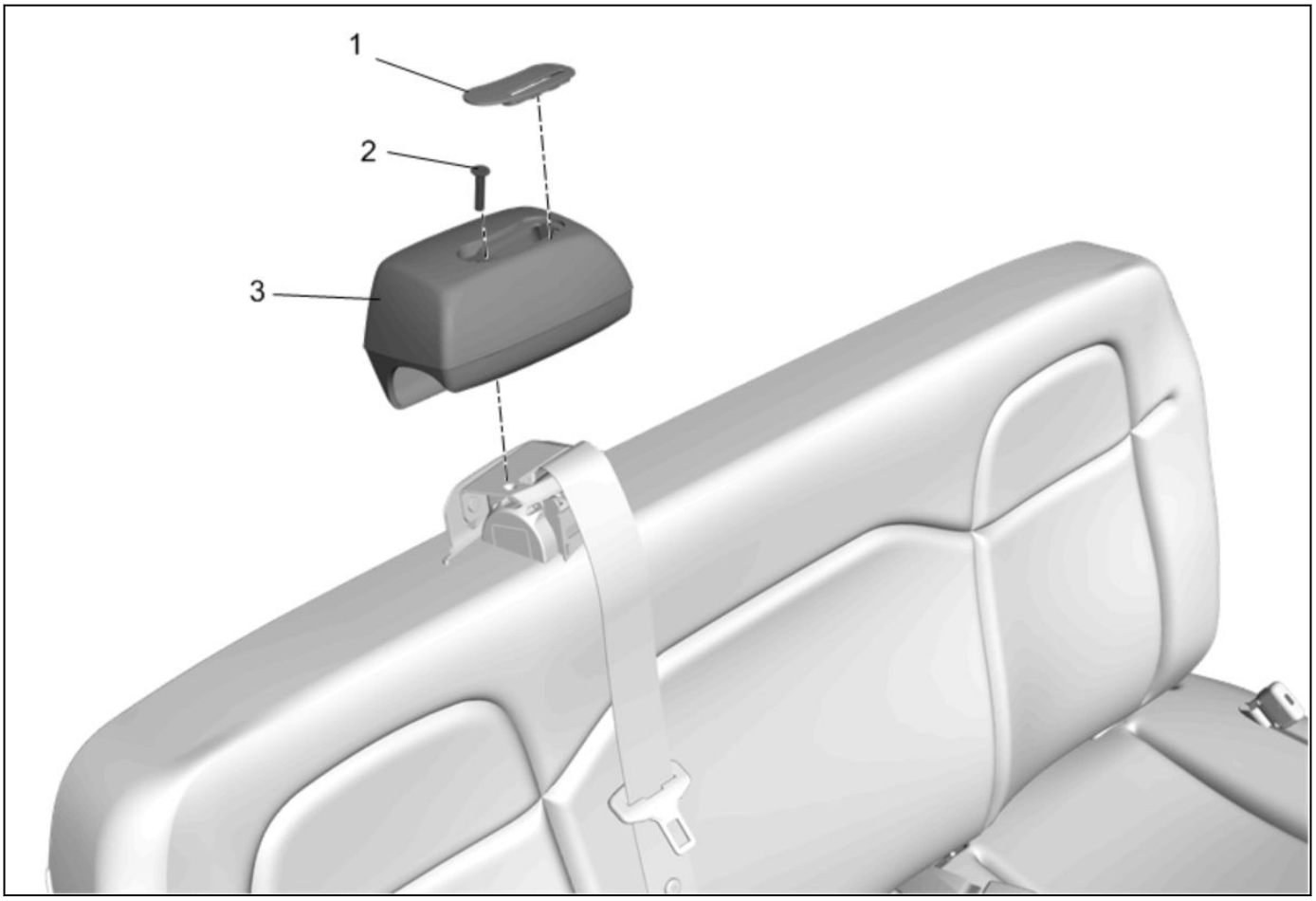

4854873

4. Rear Seat Retractor Housing (3) » Install
5. Rear Seat Retractor Housing Screw (2) » Install and tighten**1.5** N•m **(13 lb in)**
6. Rear Seat Retractor Housing Bezel (1) » Install
7. Rear Bench Seat » Install— [Link target (target-id 56899-) not found]

Supplemental Restraints

Specifications

Fastener Specifications

Reusable Threaded Fastener Tightening Specifications

Note: All fasteners listed in this table can be reused after removal.	
Application	**Specification**
	Metric (English)
Airbag Front End Sensor Fastener	7.5 N•m (66 lb in)
Airbag Sensing and Diagnostic Module Nut	9 N•m (80 lb in)
Airbag Side Impact Sensor Bolt	7.5 N•m (66 lb in)
Front Seat Outboard Seat Back Airbag Nut	9 N•m (80 lb in)
Inflatable Restraint Instrument Panel Inflatable Restraint Module Bolt	10 N•m (89 lb in)
Roof Side Rail Inflatable Restraint Module Bolt	9 N•m (80 lb in)
Seat Belt Buckle Pretensioner Bolt	45 N•m (33 lb ft)

Schematic and Routing Diagrams

SIR Schematics (Module Power, Ground, Serial Data, and Front Air Bags)

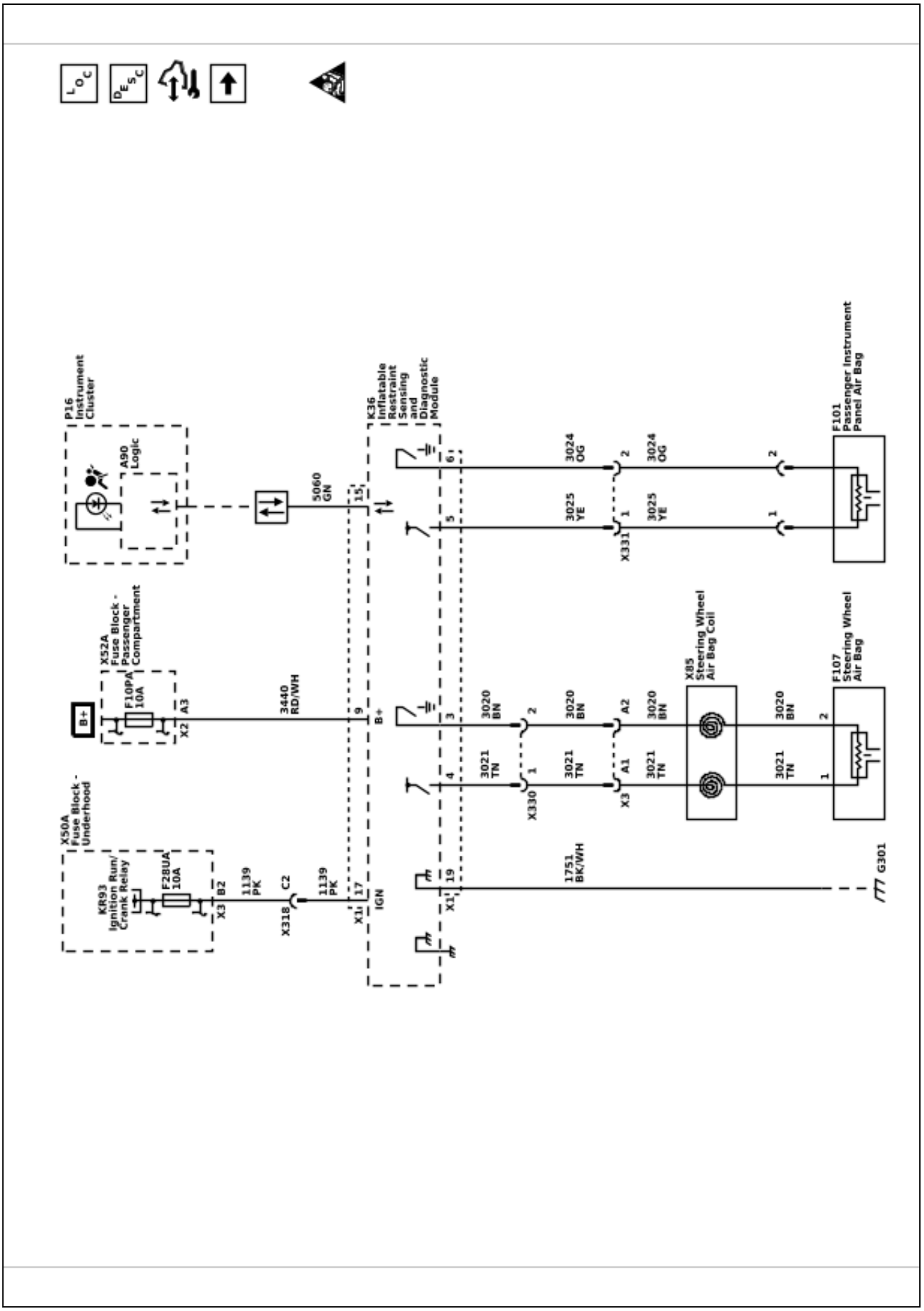

7085802

SIR Schematics (Impact Sensors)

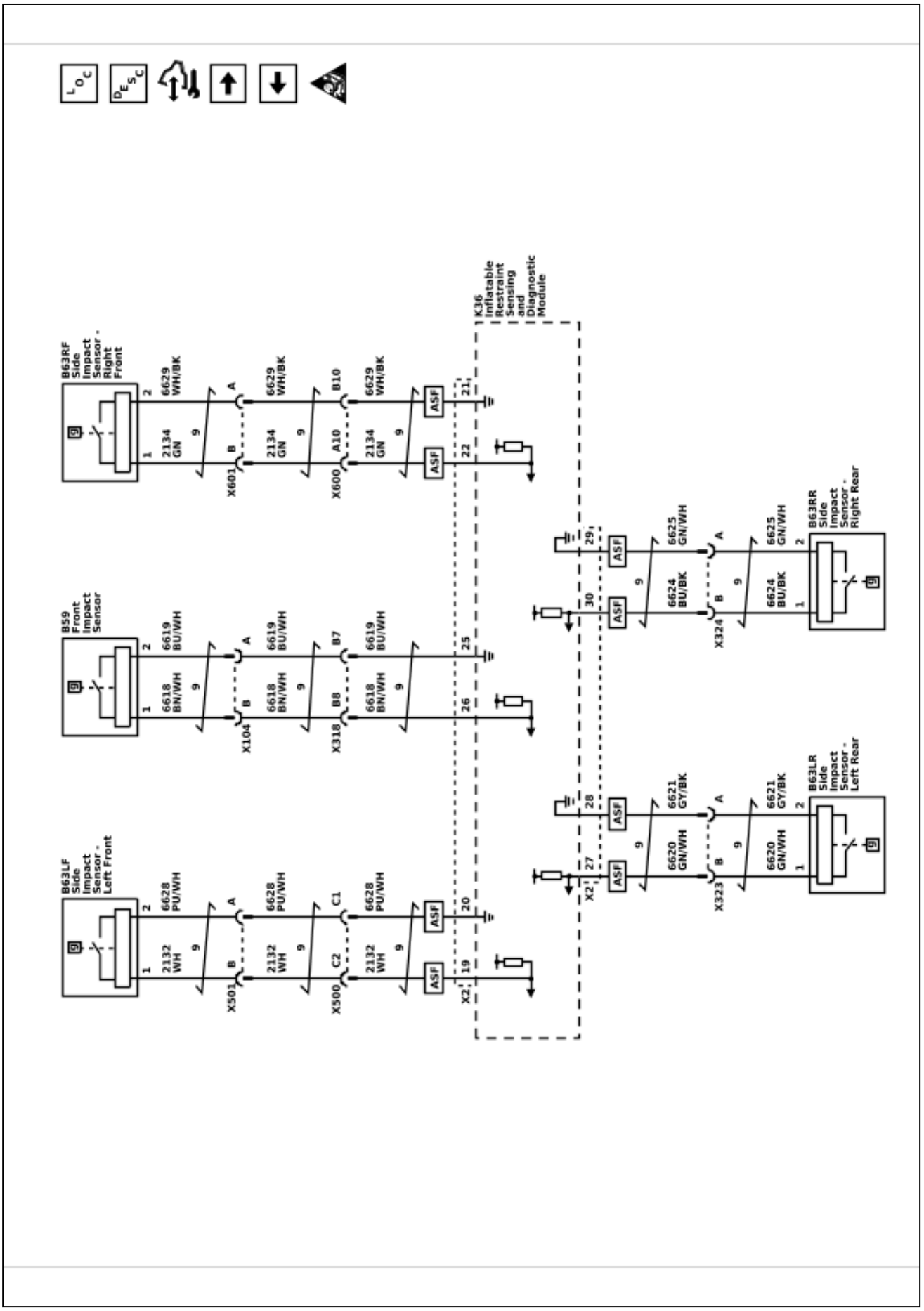

7085803

SIR Schematics (Roof Rail Air Bags, Seat Side Air Bags, and Seat Belt Pretensioners)

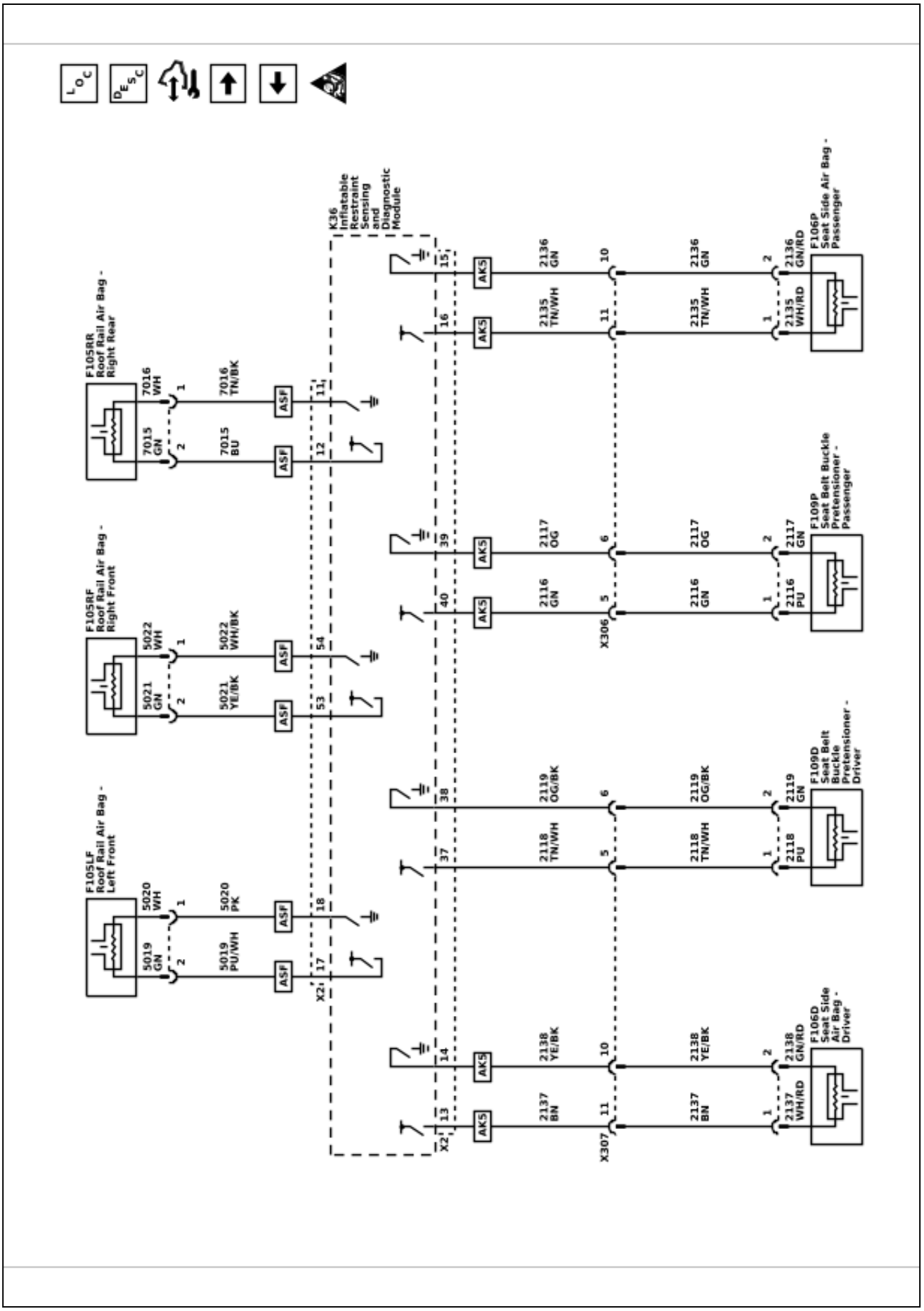

7085804

7085805

SIR Schematics (Passenger Air Bag Disable Switch (C99))

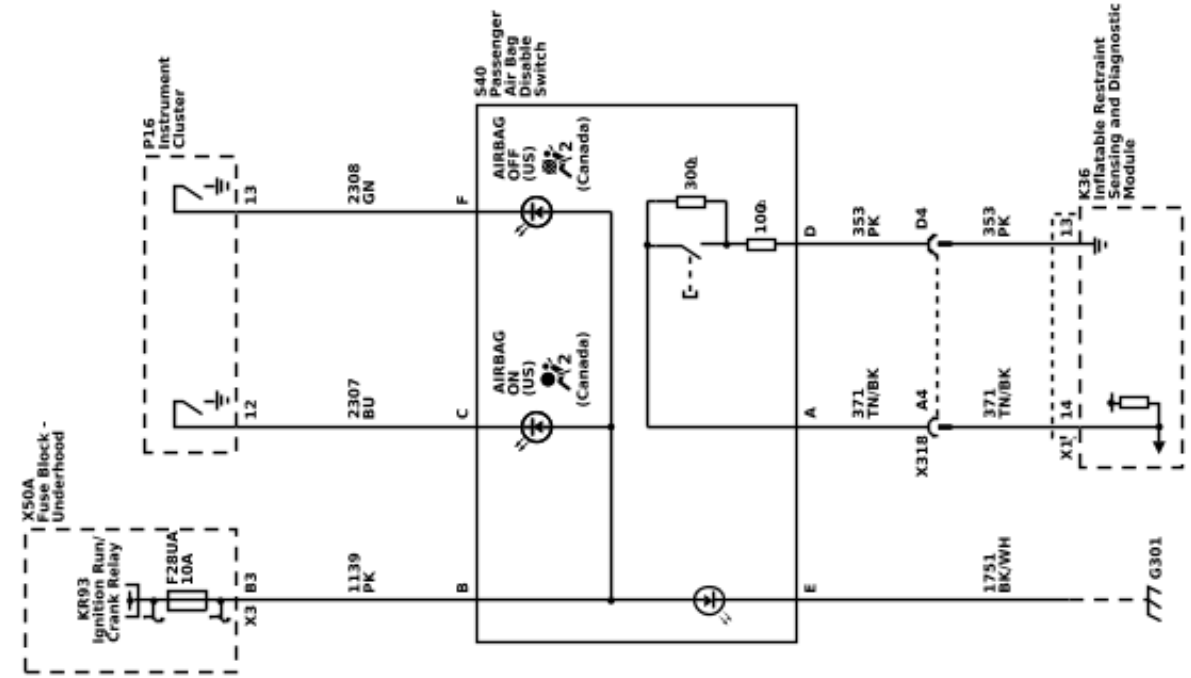

Repair Instructions

Airbag Front End Sensor Replacement

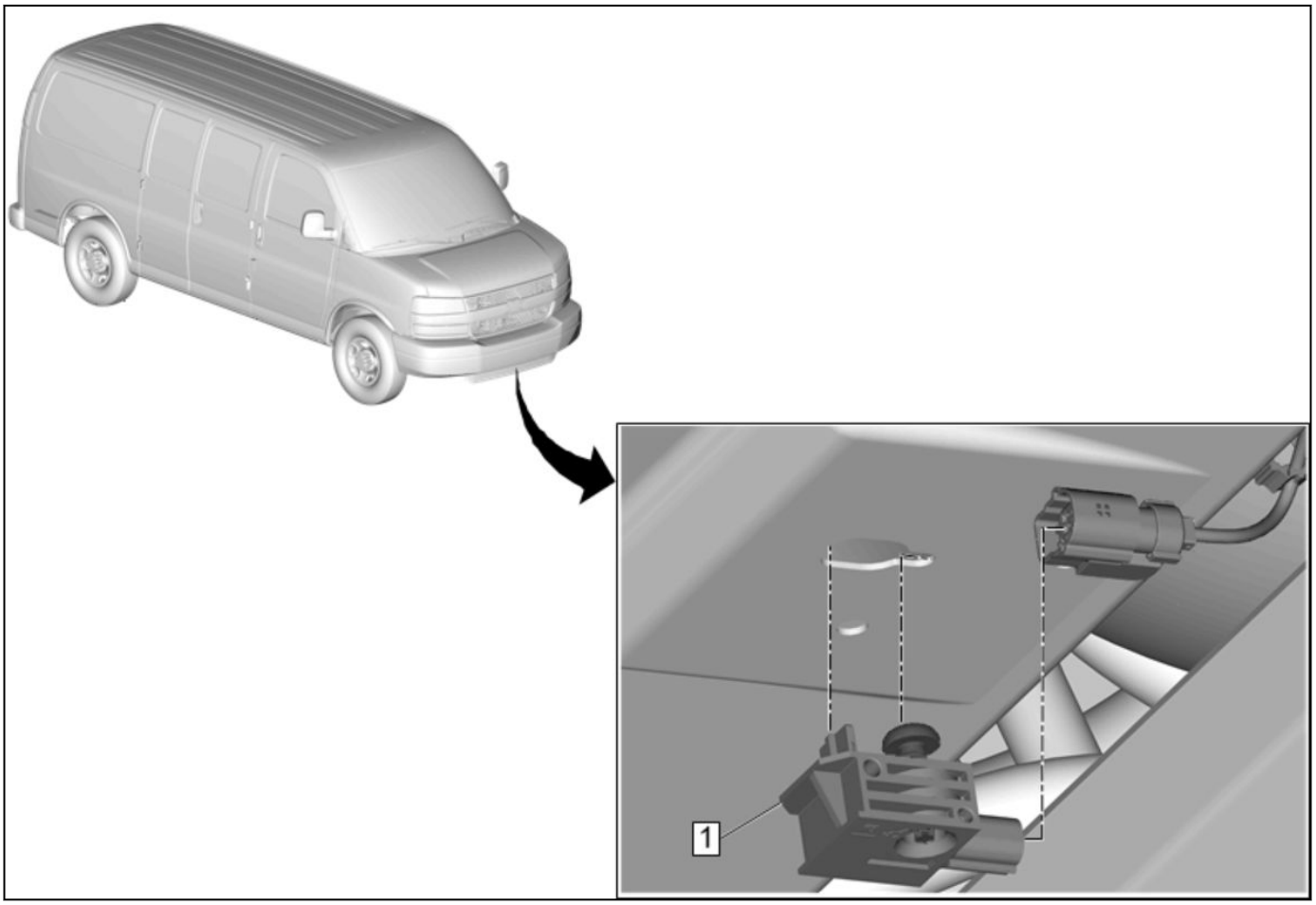

4282853

Airbag Front End Sensor Replacement

Callout	Component Name
	Warning: Refer to [Link target (target-id 178083-) not found] . ***Warning: Refer to [Link target (target-id 178089-) not found] .*** ***Warning: Following the deployment of a side impact air bag, inspect the following parts for damage. Replace these parts if necessary:*** • ***The seat cushion frame*** • ***The seat recliner, if equipped*** • ***The seat adjuster*** • ***The seat back frame*** ***Failure to do so may cause future personal injury.*** **Preliminary Procedure** Disable the SIR system and follow all applicable SIR service precautions. [Link target (target-id 149662-) not found]
1	Airbag Front End Sensor **Caution:** Refer to [Link target (target-id 178169-) not found] . **Procedure** 1. Disconnect the electrical connector. 2. Loosen the fastener and slide the sensor out of the keyhole slot. 3. The fastener is integral to the sensor assembly, DO NOT remove separately. 4. Enable the SIR System. [Link target (target-id 149662-) not found] **Tighten** 7.5 N•m (66 lb in) **Note:** Integral sensor assembly bolt uses Left Hand threads. Use counterclockwise rotation to loosen fastener at TORX® tip end. If accessing at pan head end of the fastener, use clockwise rotation to loosen bolt.

Restraints Control Module Replacement

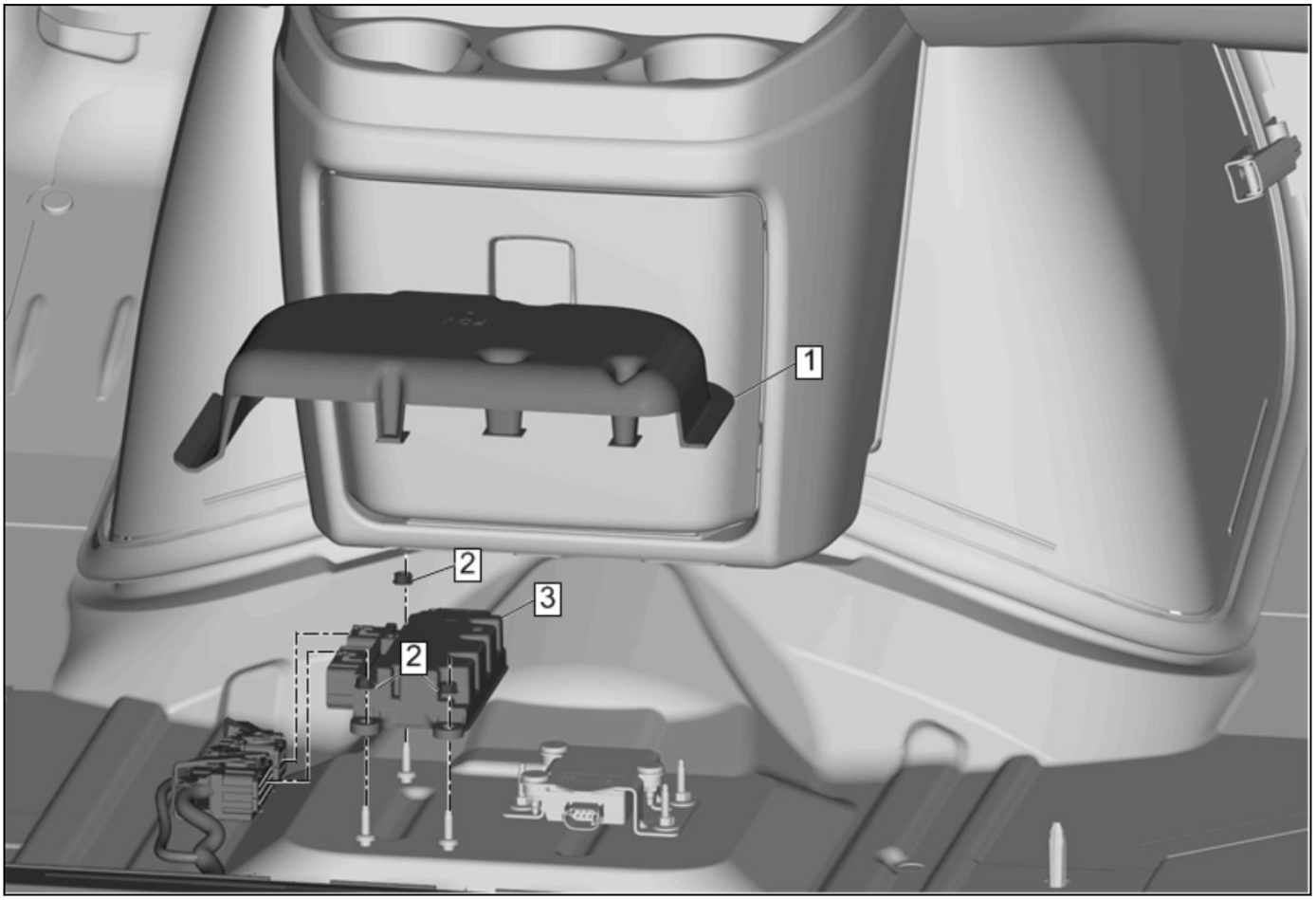

4279777

Restraints Control Module Replacement

Callout	Component Name
Warning: Refer to [Link target (target-id 178083-) not found] . ***Warning: Refer to [Link target (target-id 178089-) not found] .*** ***Warning: Following the deployment of a side impact air bag, inspect the following parts for damage. Replace these parts if necessary:*** • ***The seat cushion frame*** • ***The seat recliner, if equipped*** • ***The seat adjuster*** • ***The seat back frame*** ***Failure to do so may cause future personal injury.*** **Preliminary Procedures** 1. Disable the SIR system and follow all applicable SIR service precautions. [Link target (target-id 149662-) not found] 2. [Link target (target-id 148357-) not found]	
1	Airbag Vehicle Rollover Sensor Cover
2	Airbag Sensing and Diagnostic Module Nut [3x] **Caution:** Refer to [Link target (target-id 178169-) not found] . **Tighten** 9 N•m (80 lb in)
3	Restraints Control Module **Procedure** 1. Disconnect the electrical connectors. 2. [Link target (target-id 72864-) not found] for programming and setup information, if required. 3. Enable the SIR System. [Link target (target-id 149662-) not found]

Airbag Steering Wheel Module Replacement

Removal Procedure

Warning: After installation of the steering wheel airbag module to the steering wheel, slightly pull the module outward. If there is no give on the airbag module then it is secured correctly. If the airbag module is not fully attached personal injury could result.

Warning: Refer to [Link target (target-id 178089-) not found] .

Warning: Refer to [Link target (target-id 178083-) not found] .

1. Disable the inflatable restraint steering wheel module. Refer to [Link target (target-id 149662-) not found] .

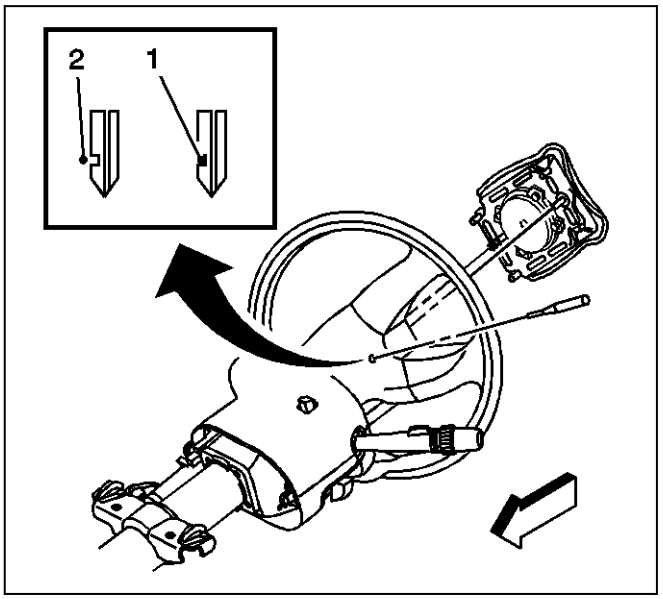

760459

2. Using a blunt-ended tool, push the leaf spring fasteners (2) inward through the access holes. The access holes are located on both sides of the steering wheel shroud.

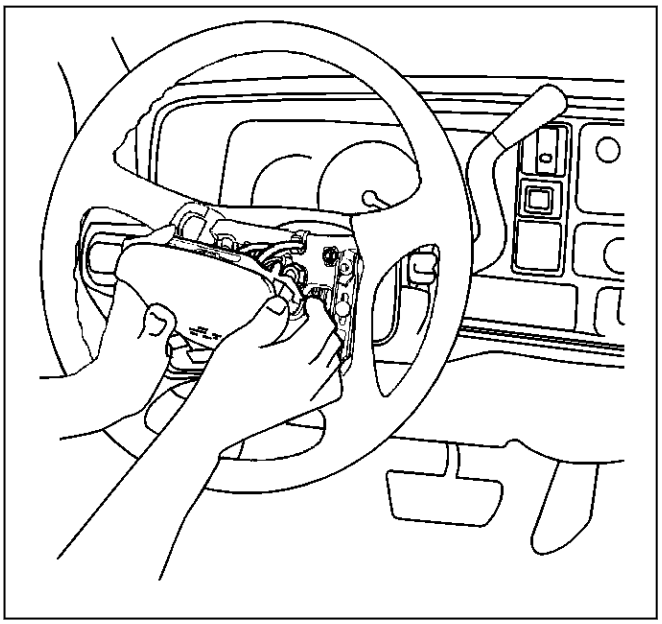

245799

3. Lift and partially remove the inflatable restraint steering wheel module from the steering wheel in order to expose the electrical connectors.
4. Disconnect the connector-position assurance (CPA) retainers from the electrical connectors.
5. Disconnect the electrical connectors from the inflatable restraint steering wheel module.

Note: Do not attempt to repair the inflatable restraint steering wheel module. The inflatable restraint steering wheel module is replaced only as an assembly.

6. Remove the inflatable restraint module from the steering wheel.
7. Refer to [Link target (target-id 63878-) not found] .

Installation Procedure

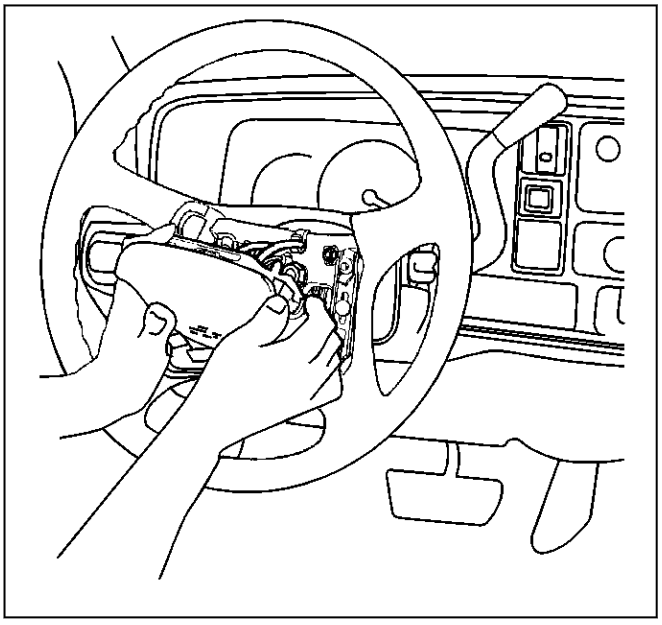

245799

1. Position the inflatable restraint module to the steering wheel.
2. Connect the electrical connectors to the inflatable restraint steering wheel module.
3. Connect the CPA retainers into the electrical connectors. Seat and lock the connections.

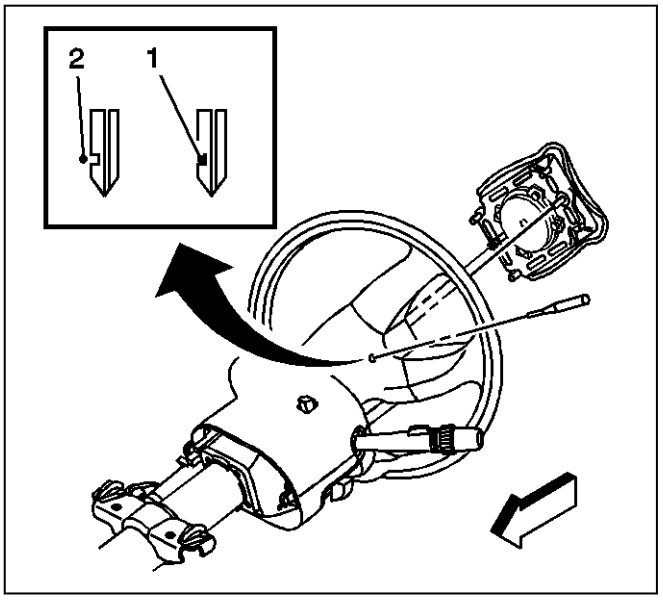

760459

4. Position the alignment posts of the inflatable restraint module to the holes that are located on the steering wheel housing.
5. Push the inflatable restraint module into the steering wheel in order to engage and in order to latch the 2 leaf spring fasteners (1).

Warning: After installation of the steering wheel airbag module to the steering wheel, slightly pull the module outward. If there is no give on the airbag module then it is secured correctly. If the airbag module is not fully attached personal injury could result.

6. After installation, pull the sides of the inflatable restraint module in order to ensure that both leaf spring fasteners are engaged.
7. Enable the inflatable restraint steering wheel module. Refer to [Link target (target-id 149662-) not found] .

Instrument Panel Airbag Replacement

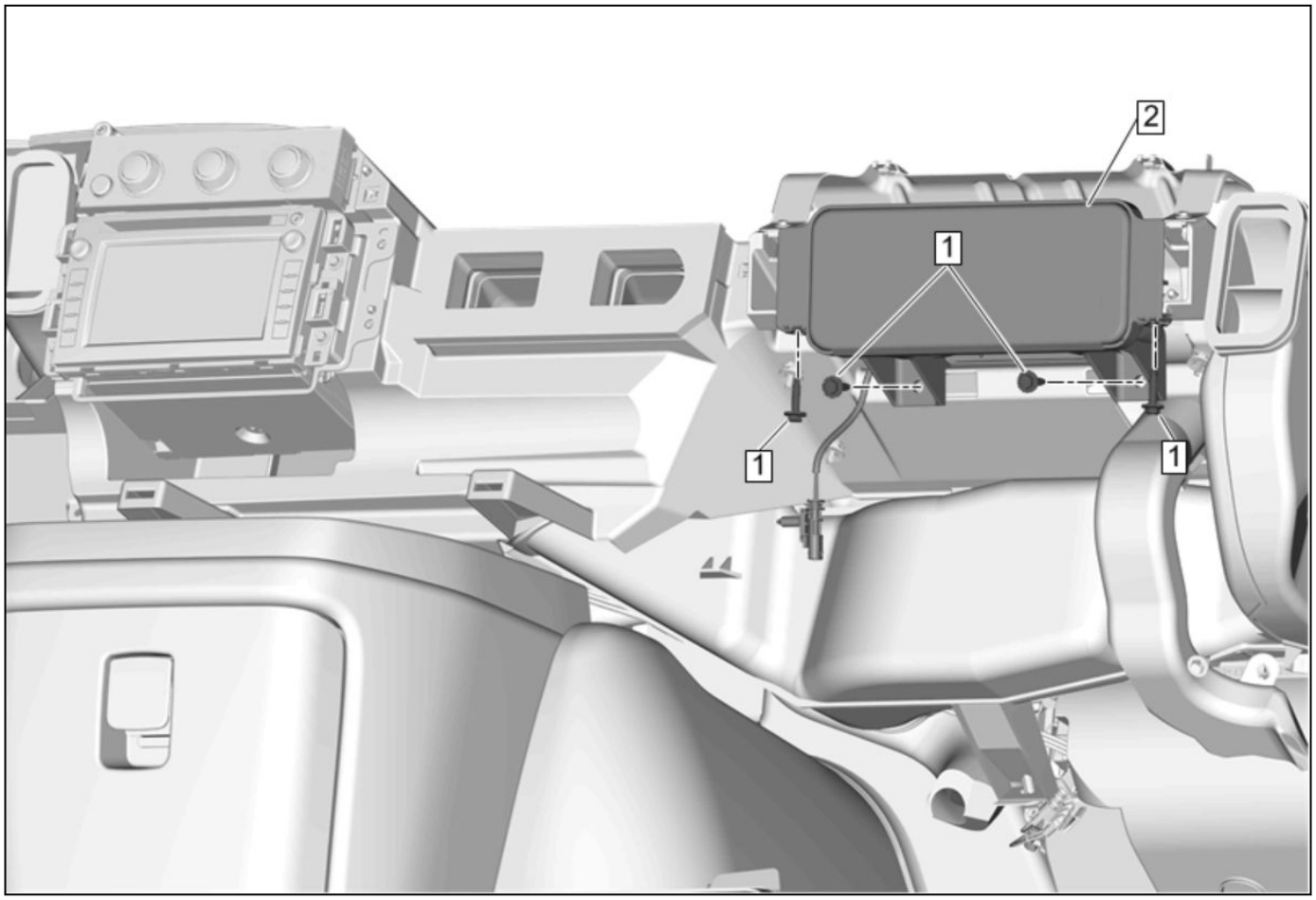

4870786

Instrument Panel Airbag Replacement

Callout	Component Name
Warning: Refer to [Link target (target-id 178083-) not found] . **Preliminary Procedures** 1. Disable the SIR system and follow all applicable SIR service precautions. [Link target (target-id 149662-) not found] 2. [Link target (target-id 294380-) not found] 3. [Link target (target-id 148159-) not found]	
1	Instrument Panel Airbag Bolt [4x] **Caution:** Refer to [Link target (target-id 178169-) not found] . **Tighten** 10.9 N•m (96 lb in)
2	Instrument Panel Airbag **Procedure** 1. [Link target (target-id 63878-) not found] 2. Disconnect the electrical connector. 3. Enable the SIR System. [Link target (target-id 149662-) not found]

Front Seat Outboard Seat Back Airbag Replacement

Warning: Following the deployment of a side impact air bag, inspect the following parts for damage. Replace these parts if necessary:

- ***The seat cushion frame***
- ***The seat recliner, if equipped***
- ***The seat adjuster***
- ***The seat back frame***

Failure to do so may cause future personal injury.

Warning: Do not strike or jolt the inflatable restraint side impact sensor (SIS). Before applying power to the SIS make sure that it is securely fastened. Failure to observe the correct installation procedures could cause SIR deployment, personal injury, or unnecessary SIR system repairs.

Warning: Refer to [Link target (target-id 178083-) not found] .

Removal Procedure

1. Disable the SIR system and follow all applicable SIR service precautions. [Link target (target-id 149662-) not found]

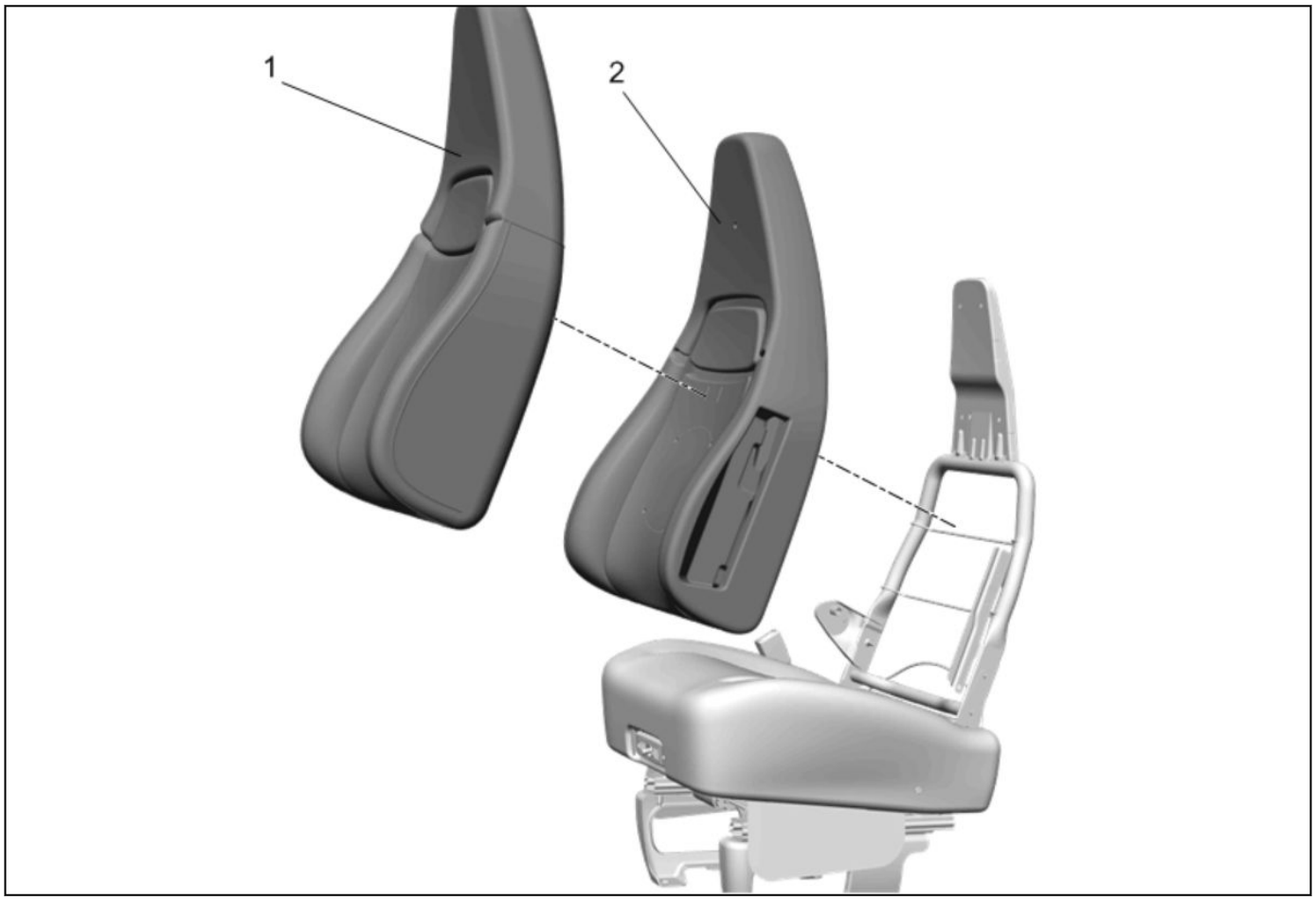

4849215

2. Front Seat Back Cover and Pad (1,2) » Remove— [Link target (target-id 56994-) not found]
3. Remove the connector position assurance (CPA) from the module electrical connector.

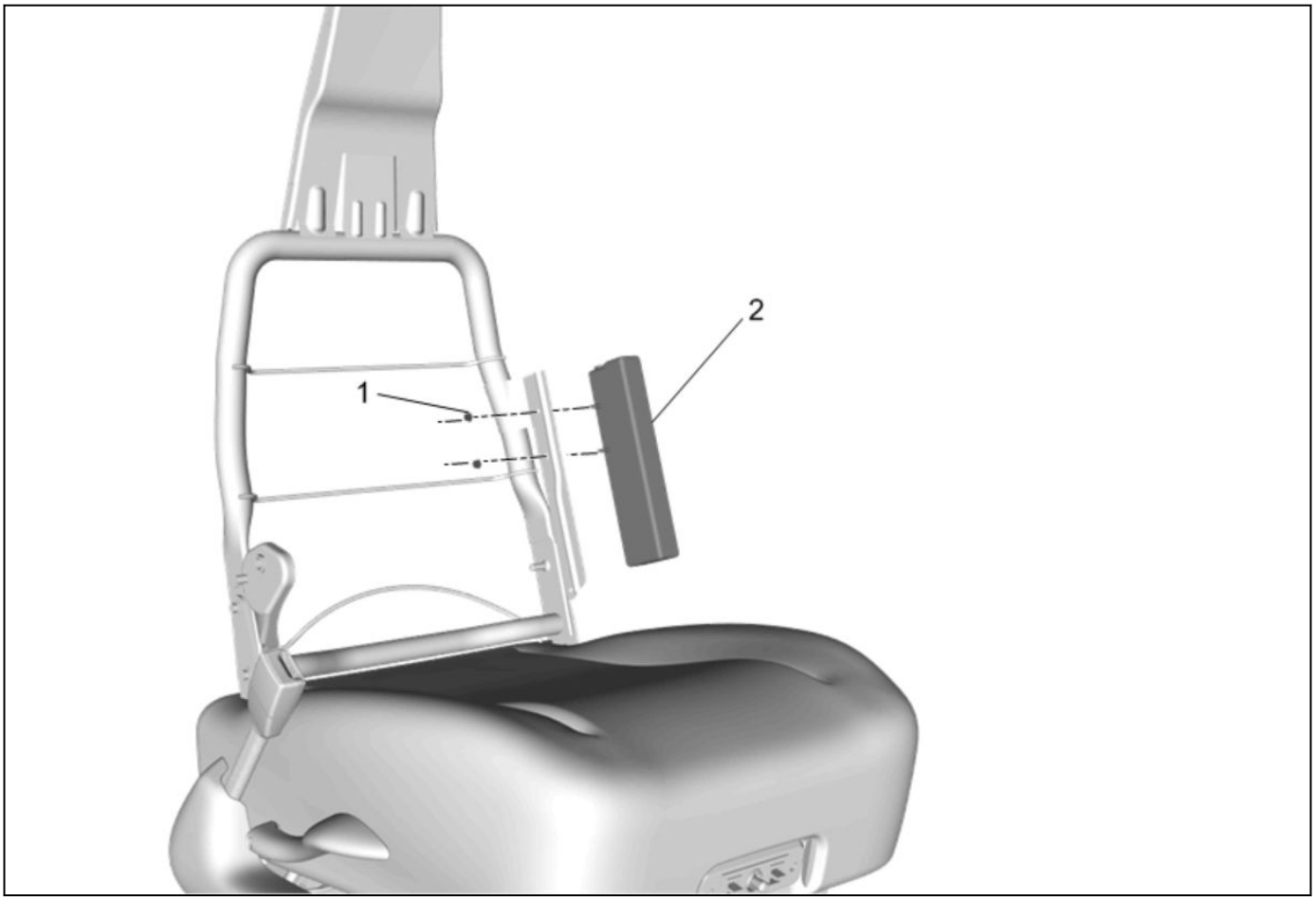

4282148

4. Front Seat Outboard Seat Back Airbag Nut (1) » Remove[2X]
5. Disconnect the electrical connector.
6. Release the locking retainer on the airbag chute.
7. Front Seat Outboard Seat Back Airbag (2) » Remove

8. Properly dispose of the airbag module. [Link target (target-id 63878-) not found]

Installation Procedure

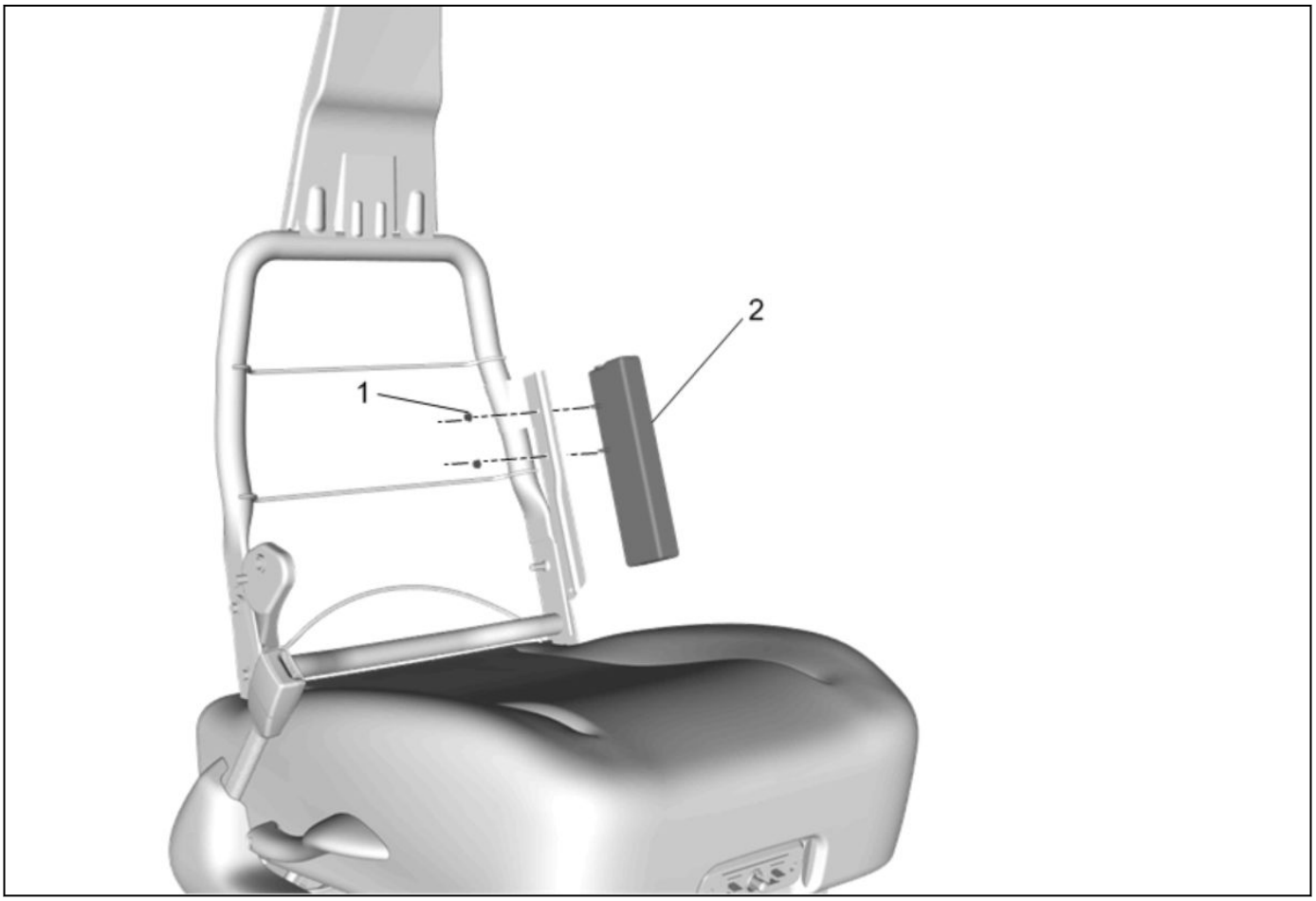

4282148

1. Front Seat Outboard Seat Back Airbag (2) » Install
2. Engage the locking retainer on the airbag chute.
3. Connect the electrical connector.

Caution: Refer to [Link target (target-id 178169-) not found] .

4. Front Seat Outboard Seat Back Airbag Nut (1) » Install and tighten[2X] **9** N•m **(80 lb in)**

Note: Do not add grease to the electrical connector.

5. Install the connector position assurance (CPA) to the electrical connector.

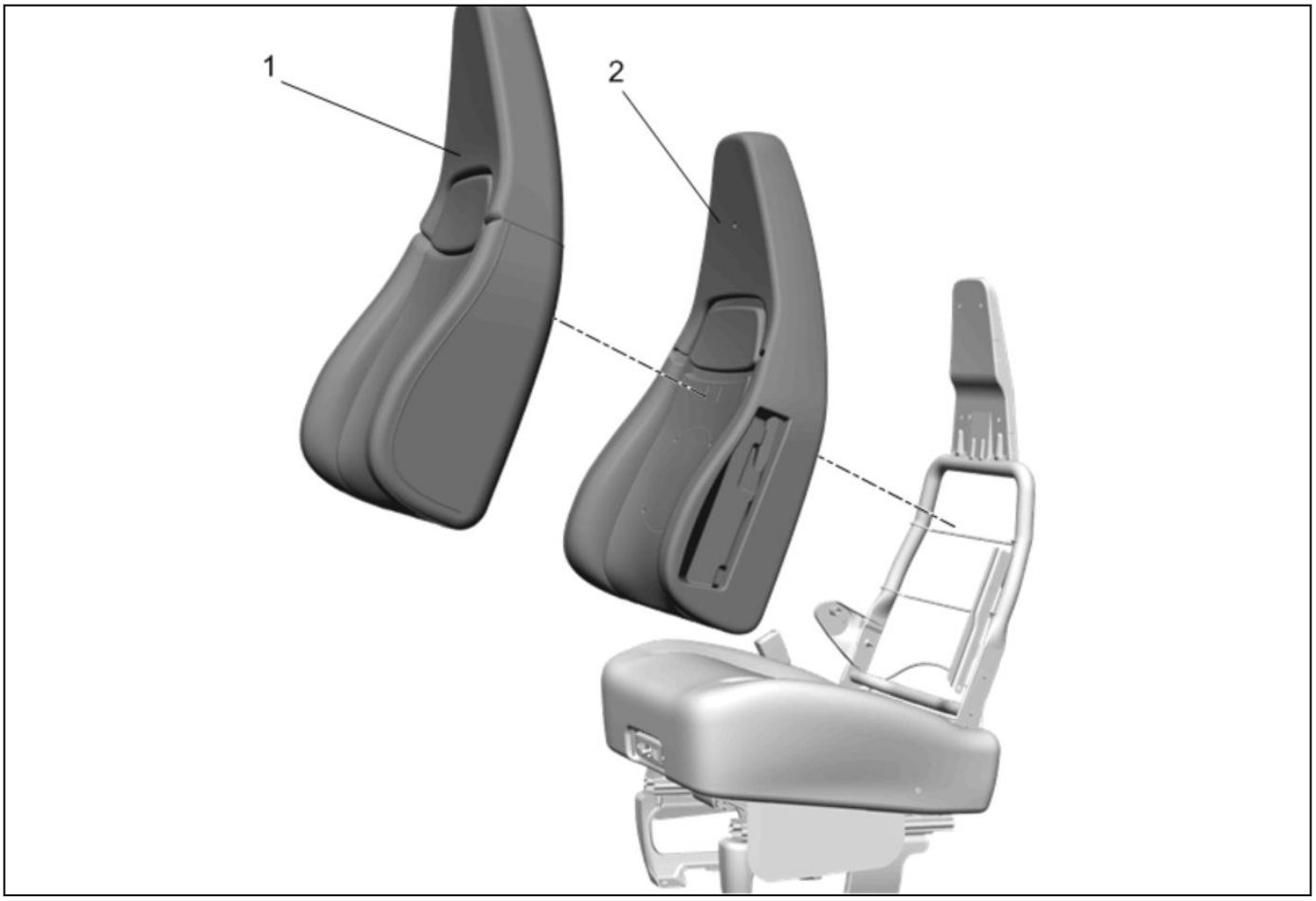

4849215

6. Front Seat Back Cover and Pad (1,2) » Install—[Link target (target-id 56994-) not found]
7. Enable the SIR System. [Link target (target-id 149662-) not found]

Airbag Side Impact Sensor Replacement - Front

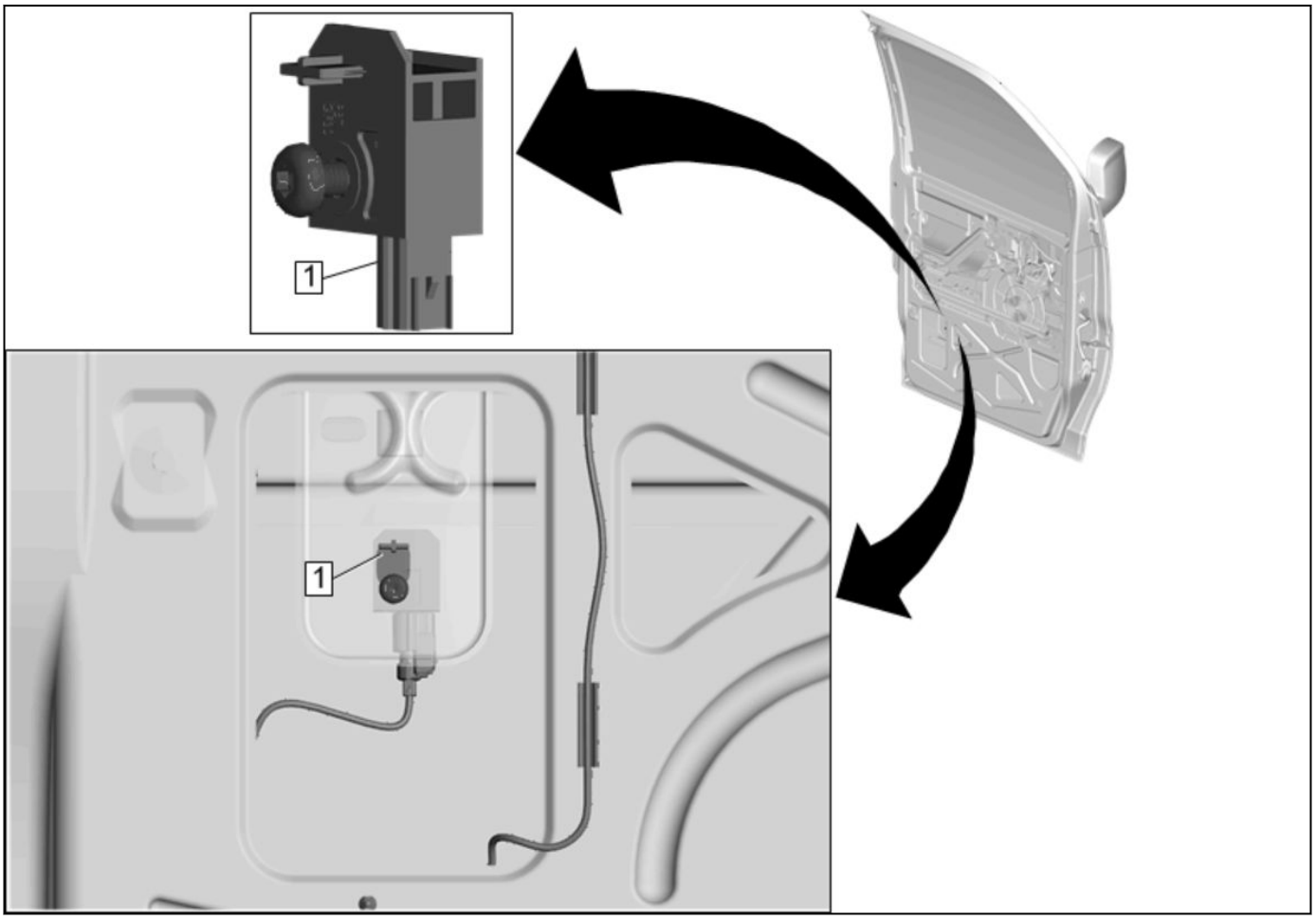

4279199

Airbag Side Impact Sensor Replacement - Front

Callout	Component Name
Warning: Refer to [Link target (target-id 178083-) not found] . ***Warning: Refer to [Link target (target-id 178089-) not found] .*** ***Warning: Following the deployment of a side impact air bag, inspect the following parts for damage. Replace these parts if necessary:*** • ***The seat cushion frame*** • ***The seat recliner, if equipped*** • ***The seat adjuster*** • ***The seat back frame*** ***Failure to do so may cause future personal injury.*** **Preliminary Procedures** 1. Disable the SIR system and follow all applicable SIR service precautions. [Link target (target-id 149662-) not found] 2. [Link target (target-id 149952-) not found] 3. [Link target (target-id 149852-) not found]	

Callout	Component Name
1	Airbag Side Impact Sensor **Caution:** Refer to [Link target (target-id 178169-) not found] . **Procedure** 1. Disconnect the electrical connector. 2. Loosen the fastener and slide the sensor out of the keyhole slot. 3. The bolts are integral to the sensor assembly, DO NOT remove separately. 4. Enable the SIR System. [Link target (target-id 149662-) not found] **Tighten** 7.5 N•m (66 lb in) **Note:** • The sensor is located on the inside of the front door inner panel. • Integral sensor assembly bolt uses Left Hand threads. Use counterclockwise rotation to loosen fastener at TORX® tip end. If accessing at pan head end of the fastener, use clockwise rotation to loosen bolt.

Airbag Side Impact Sensor Replacement - Left Side Rear

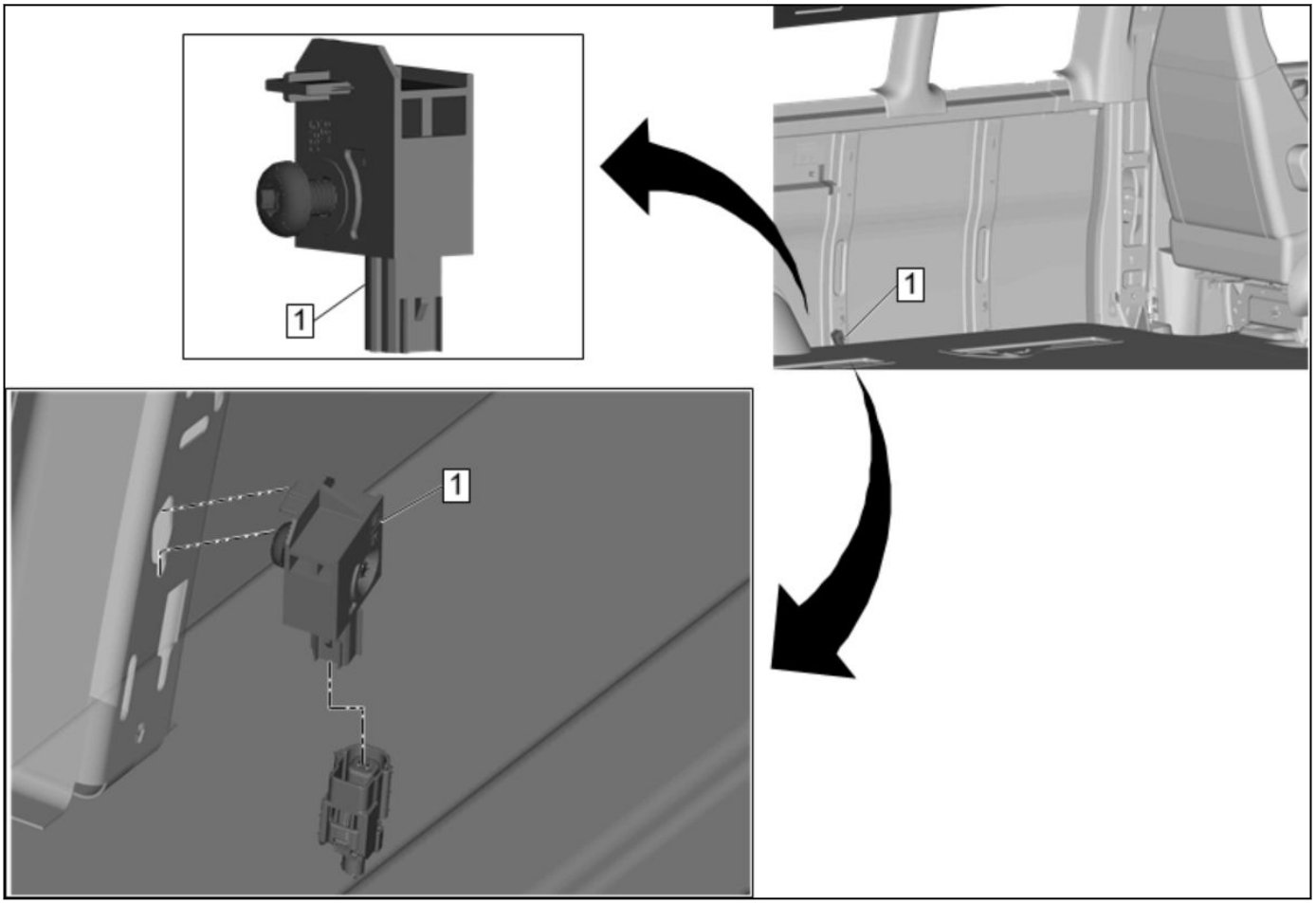

4279993

Airbag Side Impact Sensor Replacement - Left Side Rear

Callout	Component Name
Warning: Refer to [Link target (target-id 178083-) not found] . ***Warning: Refer to [Link target (target-id 178089-) not found] .*** ***Warning: Following the deployment of a side impact air bag, inspect the following parts for damage. Replace these parts if necessary:*** • ***The seat cushion frame*** • ***The seat recliner, if equipped*** • ***The seat adjuster*** • ***The seat back frame*** ***Failure to do so may cause future personal injury.*** **Preliminary Procedures** 1. Disable the SIR system and follow all applicable SIR service precautions. [Link target (target-id 149662-) not found] 2. [Link target (target-id 51619-) not found]	
1	Airbag Side Impact Sensor **Caution:** Refer to [Link target (target-id 178169-) not found] . **Procedure** 1. Disconnect the electrical connector. 2. Loosen the fastener and slide the sensor out of the keyhole slot. 3. The bolts are integral to the sensor assembly, DO NOT remove separately. 4. Enable the SIR System. [Link target (target-id 149662-) not found] **Tighten** 7.5 N•m (66 lb in) **Note:** Integral sensor assembly bolt uses Left Hand threads. Use counterclockwise rotation to loosen fastener at TORX® tip end. If accessing at pan head end of the fastener, use clockwise rotation to loosen bolt.

Airbag Side Impact Sensor Replacement - Right Side Rear (With YA2)

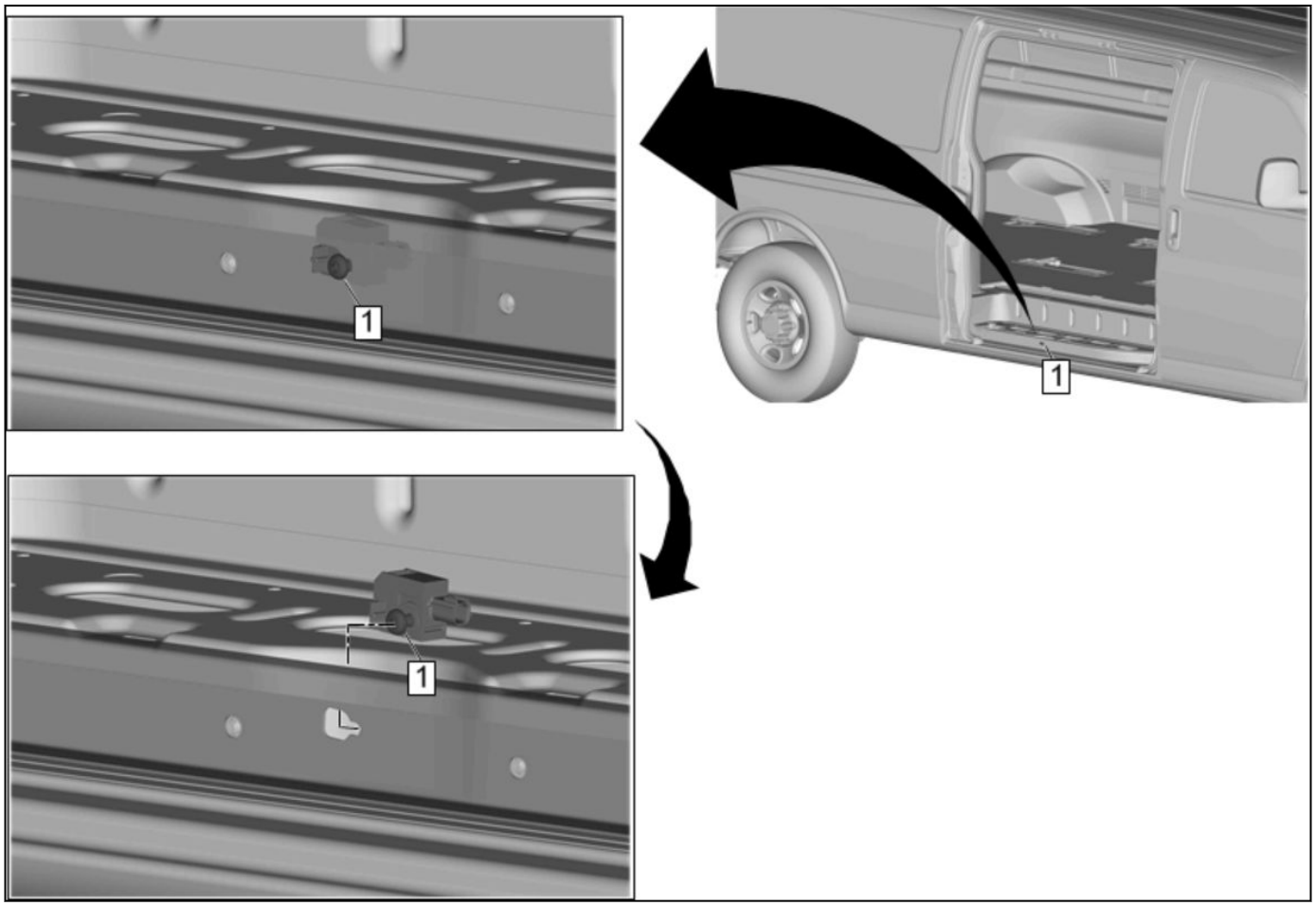

4280919

Airbag Side Impact Sensor Replacement - Right Side Rear (With YA2)

Callout	Component Name
Warning: Refer to [Link target (target-id 178083-) not found] . ***Warning: Refer to [Link target (target-id 178089-) not found] .*** ***Warning: Following the deployment of a side impact air bag, inspect the following parts for damage. Replace these parts if necessary:*** • ***The seat cushion frame*** • ***The seat recliner, if equipped*** • ***The seat adjuster*** • ***The seat back frame*** ***Failure to do so may cause future personal injury.*** **Preliminary Procedures** 1. Disable the SIR system and follow all applicable SIR service precautions. [Link target (target-id 149662-) not found] 2. [Link target (target-id 148376-) not found]	
1	Airbag Side Impact Sensor **Caution:** Refer to [Link target (target-id 178169-) not found] . **Procedure** 1. Disconnect the electrical connector. 2. Loosen the fastener and slide the sensor out of the keyhole slot. 3. The bolts are integral to the sensor assembly, DO NOT remove separately. 4. Enable the SIR System. [Link target (target-id 149662-) not found] **Tighten** 7.5 N•m (66 lb in) **Note:** Integral sensor assembly bolt uses Left Hand threads. Use counterclockwise rotation to loosen fastener at TORX® tip end. If accessing at pan head end of the fastener, use clockwise rotation to loosen bolt.

Airbag Side Impact Sensor Replacement - Right Side Rear (With E24)

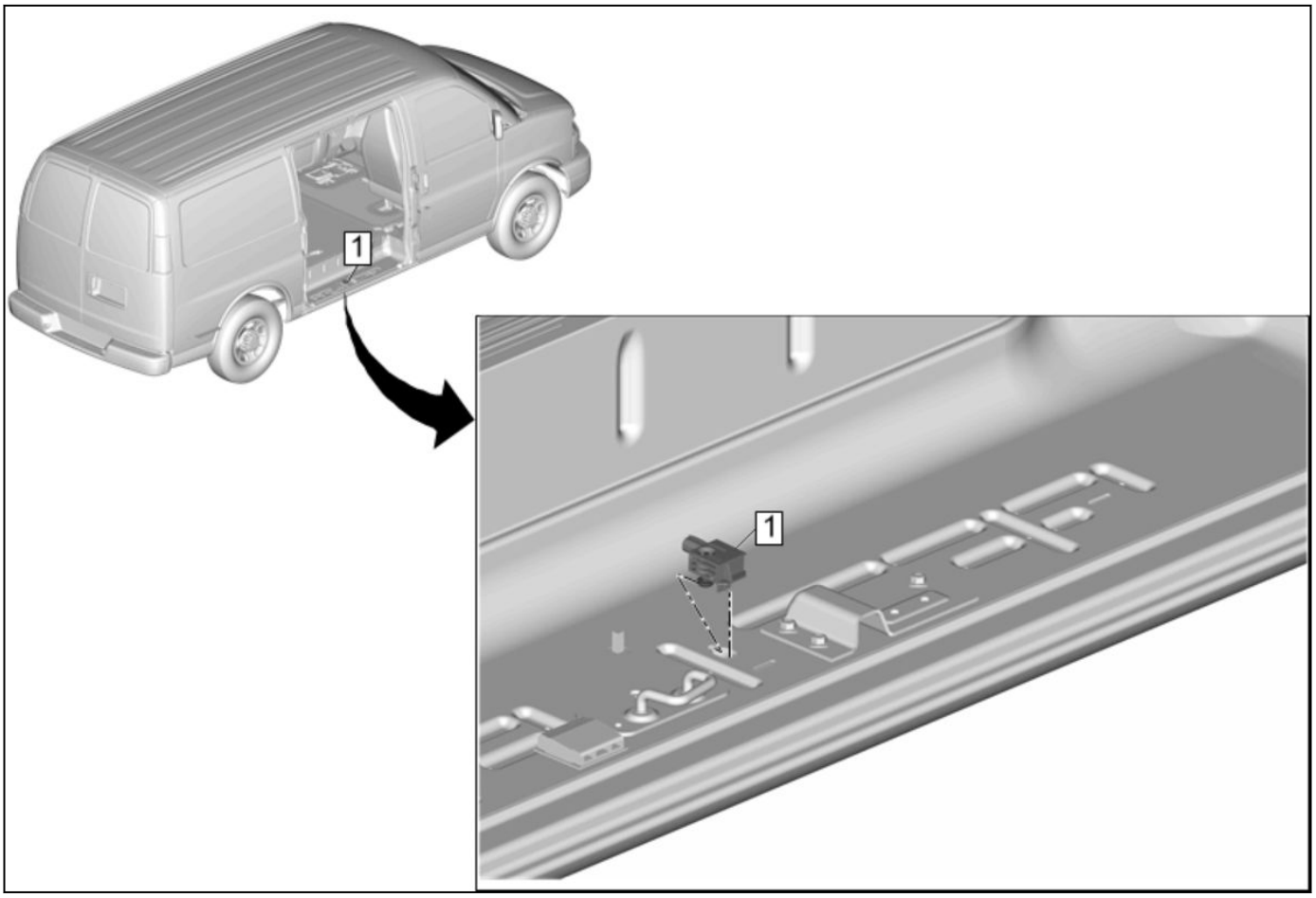

4282698

Airbag Side Impact Sensor Replacement - Right Side Rear (With E24)

Callout	Component Name
Warning: Refer to [Link target (target-id 178083-) not found] . ***Warning: Refer to [Link target (target-id 178089-) not found] .*** ***Warning: Following the deployment of a side impact air bag, inspect the following parts for damage. Replace these parts if necessary:*** • ***The seat cushion frame*** • ***The seat recliner, if equipped*** • ***The seat adjuster*** • ***The seat back frame*** ***Failure to do so may cause future personal injury.*** **Preliminary Procedures** 1. Disable the SIR system and follow all applicable SIR service precautions. [Link target (target-id 149662-) not found] 2. [Link target (target-id 148376-) not found]	
1	Airbag Side Impact Sensor **Caution:** Refer to [Link target (target-id 178169-) not found] . **Procedure** 1. Disconnect the electrical connector. 2. Loosen the fastener and slide the sensor out of the keyhole slot. 3. The bolts are integral to the sensor assembly, DO NOT remove separately. 4. Enable the SIR System. [Link target (target-id 149662-) not found] **Tighten** 7.5 N•m (66 lb in) **Note:** Integral sensor assembly bolt uses Left Hand threads. Use counterclockwise rotation to loosen fastener at TORX® tip end. If accessing at pan head end of the fastener, use clockwise rotation to loosen bolt.

Instrument Panel Airbag Switch Replacement

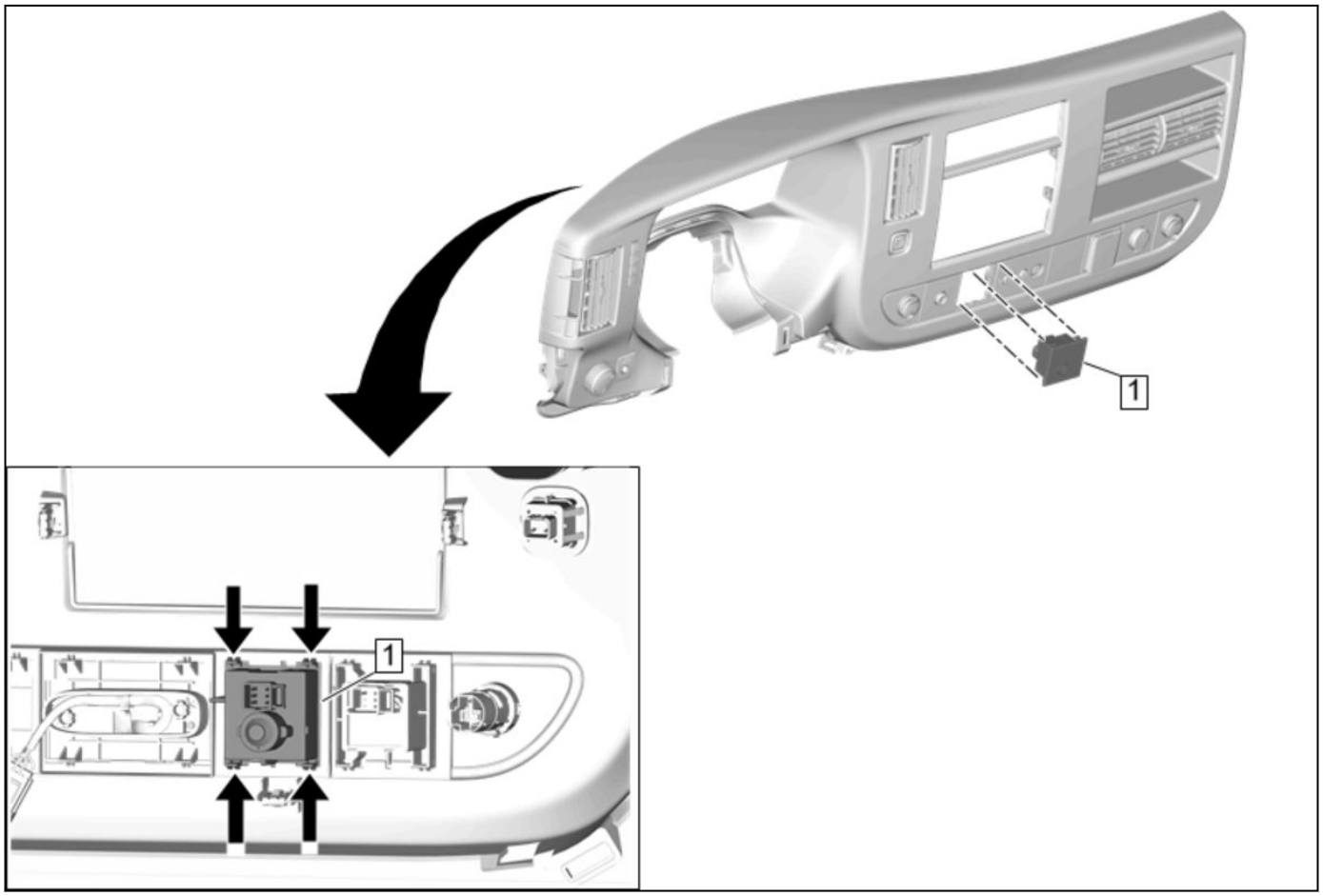

4866410

Instrument Panel Airbag Switch Replacement

Callout	Component Name
Preliminary Procedures 1. Disable the SIR system and follow all applicable SIR service precautions. [Link target (target-id 149662-) not found] 2. [Link target (target-id 167815-) not found]	
1	Instrument Panel Airbag Switch **Procedure** 1. From the backside of the instrument panel cluster trim plate, use a plastic trim tool to gently push in on the tabs to release the switch. 2. Enable the SIR System. [Link target (target-id 149662-) not found]

Airbag Roof Side Rail Module Replacement - Front

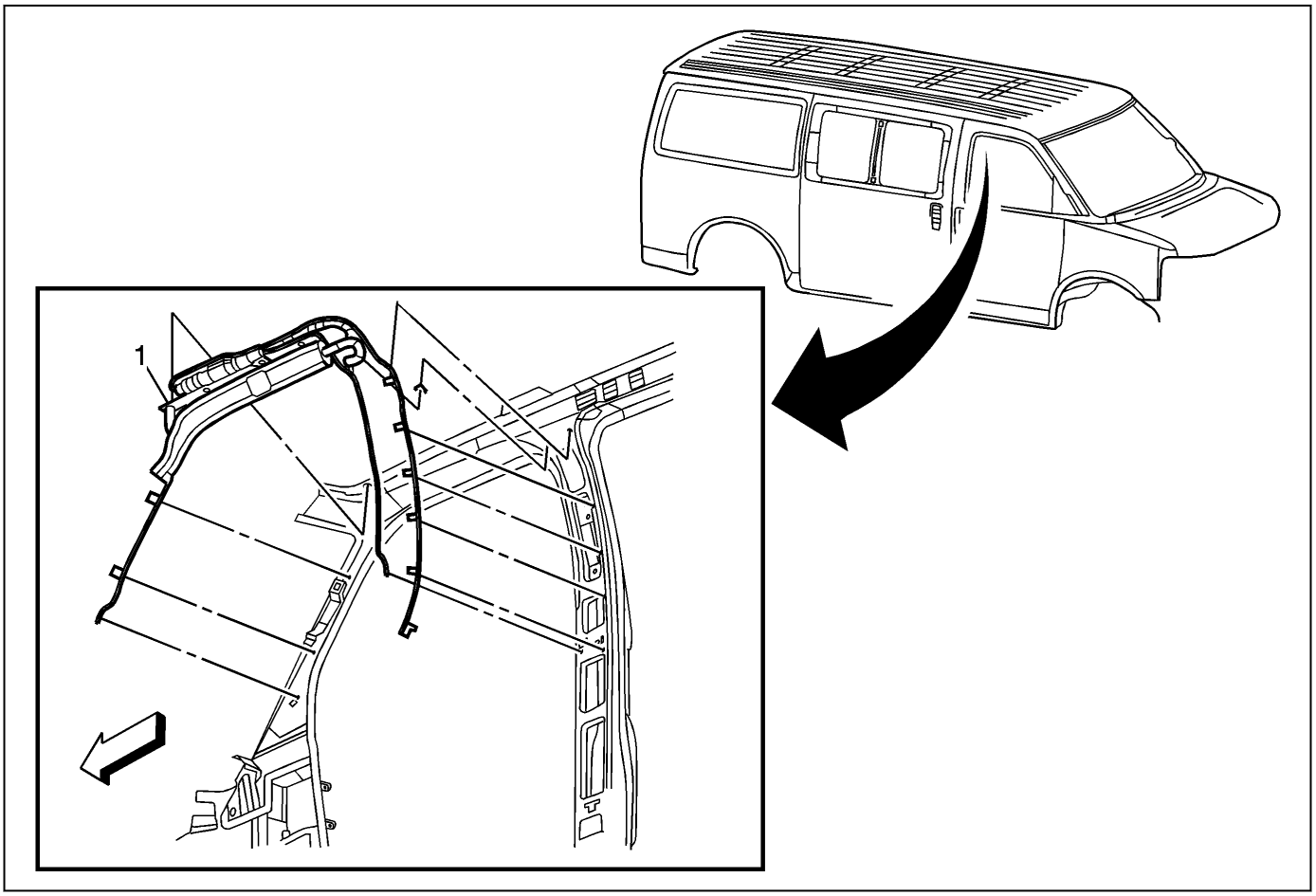

1894870

Airbag Roof Side Rail Module Replacement - Front

Callout	Component Name
Preliminary Procedure ***Warning: In order to prevent SIR deployment, personal injury, or unnecessary SIR system repairs, do not strike the door or the door pillar in the area of the side impact sensor (SIS). Turn OFF the ignition and remove the key when performing service in the area of the SIS.*** ***Warning: Refer to [Link target (target-id 178083-) not found] .*** ***Warning: Refer to [Link target (target-id 178089-) not found] .*** 1. Disable the SIR system. Refer to [Link target (target-id 149662-) not found] . 2. Remove the front headliner assembly. Refer to [Link target (target-id 148367-) not found] .	
1	Front Roof Side Rail Inflatable Restraint Module Assembly **Caution:** Refer to [Link target (target-id 178169-) not found] . **Procedure** 1. Disconnect the electrical connector. 2. Loosen the roof side rail inflatable restraint module bolts. (Qty: 7) 3. Remove the push in retainers (Qty: 10) securing the roof side rail inflatable restraint module to the vehicle. 4. Remove the roof side rail inflatable restraint module from the vehicle. **Tip:** The bolts and the push in fasteners are an integral part of the module and should remain with the module. **Tighten** 9 newtonm (80 lb in)

Roof Side Rail Airbag Replacement (without YA2)

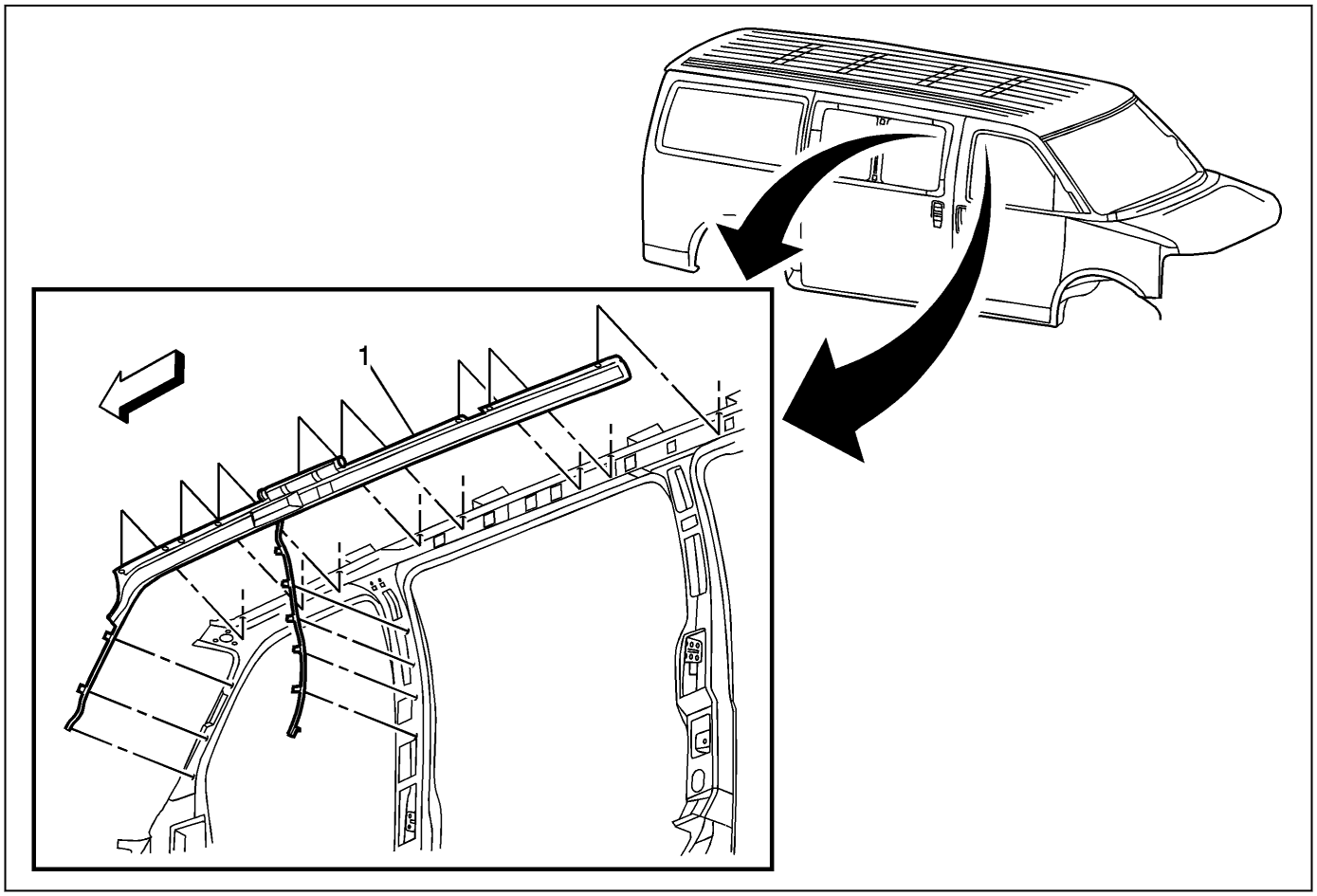

1894810

Roof Side Rail Airbag Replacement (without YA2)

Callout	Component Name
Warning: Refer to [Link target (target-id 178083-) not found] . ***Warning: Refer to [Link target (target-id 178089-) not found] .*** **Preliminary Procedures** 1. Disable the SIR system and follow all applicable SIR service precautions. [Link target (target-id 149662-) not found] 2. [Link target (target-id 148367-) not found] and [Link target (target-id 148370-) not found] 3. [Link target (target-id 51619-) not found] 4. [Link target (target-id 51648-) not found]	
1	Roof Side Rail Inflatable Restraint Module **Caution:** Refer to [Link target (target-id 178169-) not found] . **Procedure** 1. Disconnect the electrical connector. 2. Loosen the roof side rail inflatable restraint module bolts. (Qty: 13) 3. Remove the push in retainers (Qty: 9) securing the roof side rail inflatable restraint module to the vehicle. 4. Remove the roof side rail inflatable restraint module from the vehicle with the aid of an assistant. 5. [Link target (target-id 63878-) not found] 6. Enable the SIR System. [Link target (target-id 149662-) not found] **Note:** The bolts and the push in fasteners are an integral part of the module and should remain with the module. **Tighten** 9 newtonm (80 lb in)

Airbag Roof Side Rail Module Replacement - Rear

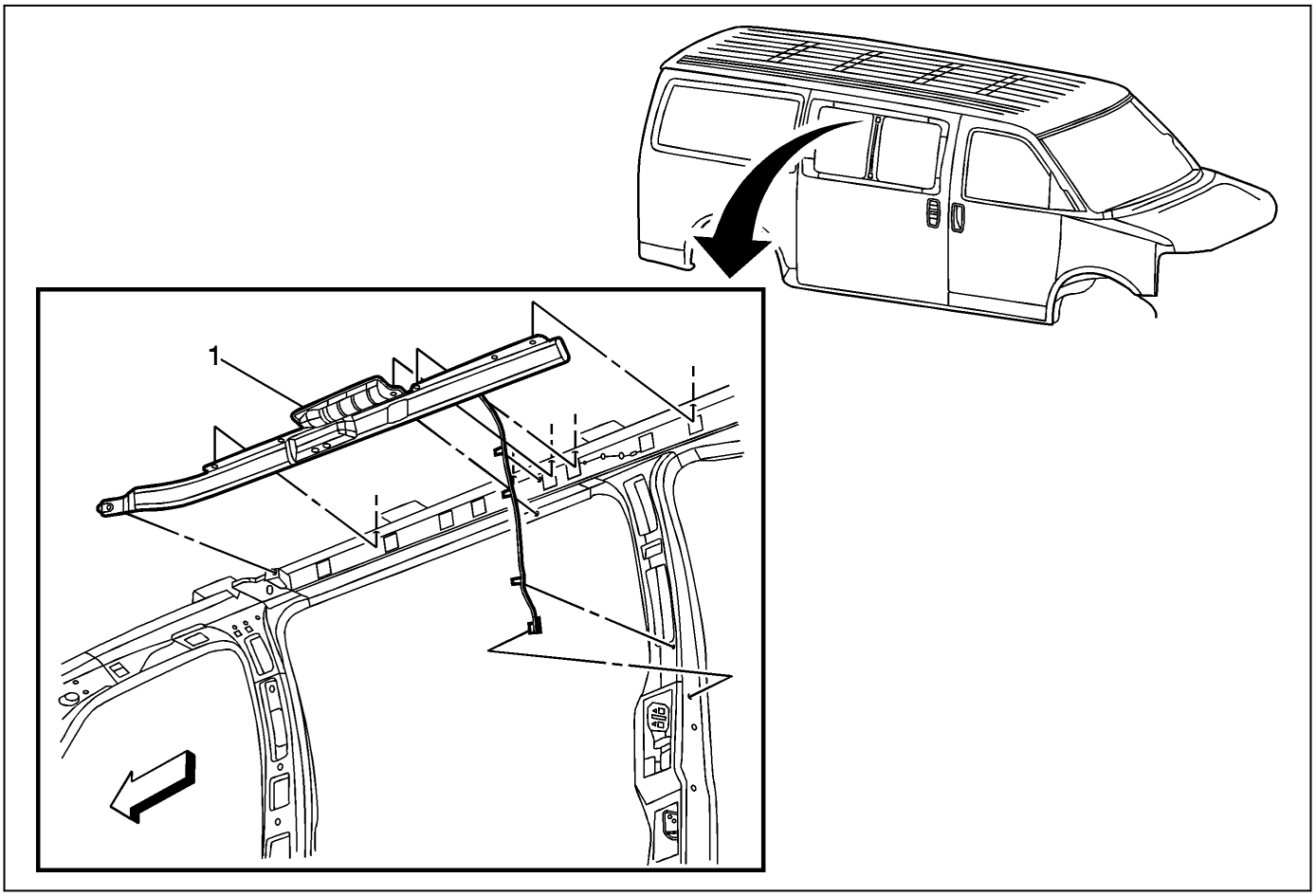

1894867

Airbag Roof Side Rail Module Replacement - Rear

Callout	Component Name
Preliminary Procedure ***Warning: In order to prevent SIR deployment, personal injury, or unnecessary SIR system repairs, do not strike the door or the door pillar in the area of the side impact sensor (SIS). Turn OFF the ignition and remove the key when performing service in the area of the SIS.*** ***Warning: Refer to [Link target (target-id 178083-) not found] .*** ***Warning: Refer to [Link target (target-id 178089-) not found] .*** 1. Disable the SIR system. Refer to [Link target (target-id 149662-) not found] . 2. Remove the rear headliner assembly. Refer to [Link target (target-id 148370-) not found] .	
1	Rear Roof Side Rail Inflatable Restraint Module Assembly **Caution:** Refer to [Link target (target-id 178169-) not found] . **Procedure** 1. Disconnect the electrical connector. 2. Loosen the roof side rail inflatable restraint module bolts. (Qty: 6) 3. Remove the push in retainers (Qty: 8) securing the roof side rail inflatable restraint module to the vehicle. 4. Remove the roof side rail inflatable restraint module from the vehicle. **Tip:** The bolts and the push in fasteners are an integral part of the module and should remain with the module. **Tighten** 9 newtonm (80 lb in)

Seat Belt Buckle Pretensioner Replacement

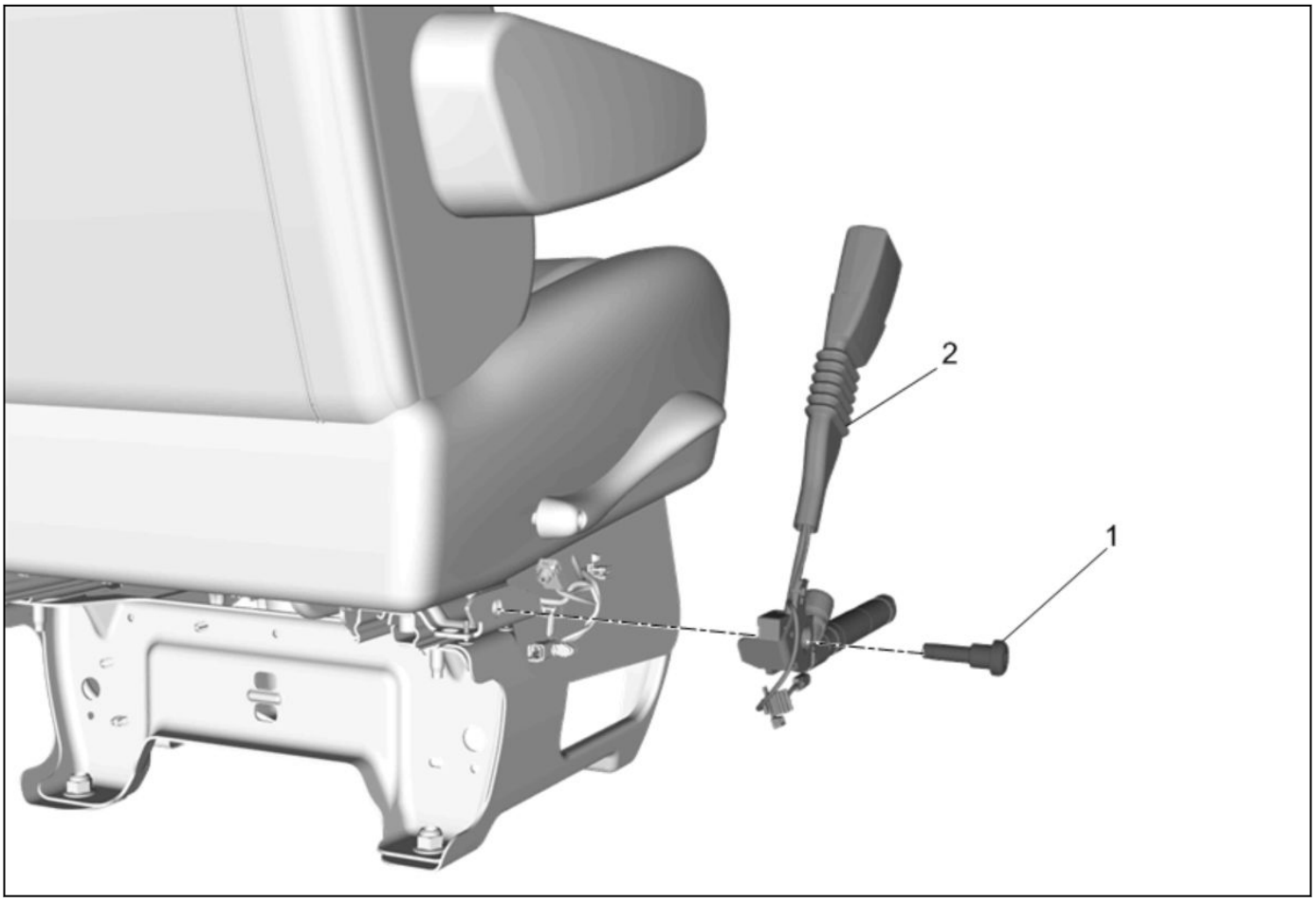

4847573

Seat Belt Buckle Pretensioner Replacement

Callout	Component Name
Warning: Refer to [Link target (target-id 178083-) not found] . ***Warning: Refer to [Link target (target-id 178089-) not found] .*** **Preliminary Procedures** 1. Disable the SIR system and follow all applicable SIR service precautions. [Link target (target-id 149662-) not found] 2. [Link target (target-id 147781-) not found]	
1	Seat Belt Buckle Pretensioner Bolt **Caution:** Refer to [Link target (target-id 178169-) not found] . **Tighten** 45 N•m (33 lb ft)
2	Seat Belt Buckle Pretensioner **Procedure** 1. Disconnect the electrical connector. 2. Enable the SIR System. [Link target (target-id 149662-) not found]

Repairs and Inspections Required After a Collision

Repairs and Inspections Required After a Collision

Warning: Proper operation of the Supplemental Inflatable Restraint (SIR) sensing system requires that any repairs to the vehicle structure return the vehicle structure to the original production configuration. Not properly repairing the vehicle structure could cause non-deployment of the air bag(s) in a frontal collision or deployment of the air bag(s) for conditions less severe than intended.

Warning: Do not repair or replace the seat stitching or seams in the seat back trim cover with an internal mounted seat side airbag module. Replace the complete seat back trim cover from the OEM. Non-OEM seat stitching may cause improper airbag deployment which could result in personal injury.

Note: General Motors (GM) vehicles, systems and components are engineered, tested and manufactured to protect vehicle occupants based upon both government mandated and internal corporate requirements relative to durability, NVH (noise/vibration/harshness), occupant protection, and vehicle safety. Only authentic Genuine GM Parts are designed, engineered, manufactured and tested to the General Motors internal and government mandated standards and are the only ones equivalent to the original equipment installed on the vehicle.

1. After ANY collision, perform the following belt operational and functional checks:
   - Turn the ignition switch to the ON position. Verify proper operation of the seat belt reminder lamp with the belt buckled and with the belt unbuckled.
   - For each seating position:
   - Inspect the shoulder belt guide to ensure that the seat belt webbing is seated flat in the guide slot and that the seat belt webbing does not bind.
   - Verify that the seat belt buckle is accessible.
   - Fully extend the seat belt webbing. Verify that the seat belt webbing does not have any twists or tears.
   - Allow the seat belt webbing to retract. Verify that the seat belt webbing returns freely and completely back into the retractor.
   - Snap the seat belt latch plate into the buckle. Sharply tug on the seat belt latch plate and the buckle. Verify that the seat belt latch plate and the buckle remain locked when tugged.
   - Push the button on the buckle. Verify the seat belt latch plate releases easily from the buckle and the button returns to its original position.
2. In instances of vehicle collision where damage is limited to minor outer body panel cosmetic distortion: visually inspect vehicle for extent of damage, repair and replace components as necessary.
3. In instances of vehicle collision where damage exceeds minor outer body panel cosmetic distortion, unrelated components can be subject to damage outside of obvious visual detection method in the area of impact. The table below references components requiring inspection or replacement to promote a safe and quality repair. Some inspections may require disassembly of vehicle components or additional functional tests. If you detect any damage, replace the component.

Component	Notes or Additional Instructions	Exceeds Minor Outer Body Panel Cosmetic Distortion without Airbag Deployment	Pretensioner Deployment	Seat Side Airbag Deployment	Frontal Airbag Deployment
Brakes & Steering					
Brake Pedal	—	Inspect	Inspect	Inspect	Inspect
Steering Column	Refer to Steering Column Accident Damage Inspection in Steering Column and Wheel.	Inspect	Inspect	Replace	Replace
Steering Wheel	—	Inspect	Inspect	Replace	Replace
Steering Wheel Airbag	If not deployed, visually inspection the top trim cover of the airbag module for deformation, distortion, or indentations as a result of damage. Replace if found.	Inspect	Inspect	Inspect	Replace
Steering Wheel Air Bag Coil and Coil Wiring Pigtail	If deployed, inspect for melting, scorching, or other damage due to excessive heat.	—	—	—	Inspect
Steering Wheel Air Bag Mounting Points and Hardware	—	—	—	—	Inspect
Impact Sensors					

Front and/or Side Impact Sensors	Impact Sensor Replacement Guidelines: • The impact sensor replacement policy requires replacing sensors in the area of the accident damage. The area of accident damage is defined as the portion of the vehicle which is crushed, bent, or damaged due to a collision. If the impact sensor or the mounting structure of the impact sensor is damaged, the impact sensor must be replaced. • Replace the impact sensor whether or not the air bags have deployed. • Replace the impact sensor even if it appears to be undamaged. • Impact sensor damage which is not visible, such as slight bending of the mounting bracket or cuts in the wire insulation, can cause improper operation of the SIR system. Do not try to determine whether the impact sensor is undamaged, replace the impact sensor. Also, if you follow a diagnostic trouble code (DTC) procedure and a malfunctioning impact sensor is indicated, replace the impact sensor.	Replace	Replace	Replace	Replace
Impact Sensors Mounting Points and Hardware	—	Inspect	Inspect	Inspect	Inspect
Instrument Panel					
Instrument Panel Cross Car Beam	—	Inspect	Inspect	Inspect	Inspect
Instrument Panel Knee Bolsters and Mounting Points	—	Inspect	Inspect	Inspect	Inspect
Instrument Panel Mounting Points and Instrument Panel Brackets, Braces, etc.	—	Inspect	Inspect	Inspect	Inspect
Instrument Panel Air Bag Mounting Points and Hardware	—	Inspect	Inspect	Inspect	Inspect
Instrument Panel Airbag	Visually inspection the top trim cover of the airbag module for deformation, distortion, or indentations as a result of damage. Replace if deformation, distortion, or indentations are found.	Inspect	Inspect	Inspect	Replace
Knee Airbag	Visually inspection the top trim cover of the airbag module for deformation, distortion, or indentations as a result of damage. Replace if deformation, distortion, or indentations are found.	Inspect	Inspect	Inspect	Replace
Roof and Interior Trim					

Roof and Headliner Mounting Points	—	Inspect	Inspect	Inspect	Inspect
Door trim assembly	On Side of Impact. Visually inspect door trim assembly for deformation or distortion as a result of damage. Replace if deformation or distortion is found.	Inspect	Inspect	Inspect	—
Trim Mounting Points and Hardware	On Side of Impact	—	Inspect	Inspect	—
Roof Rail Airbag Mounting Points and Hardware	On Side of Impact	—	Inspect	Inspect	—
Roof Rail Airbag	On Side of Impact. If not deployed, visually inspect roof trim for deformation or distortion as a result of damage. Replace if found.	Inspect	Inspect	Replace	—
Seats					
Seats and Seat Mounting Points	—	Inspect	Inspect	Inspect	Inspect
Seat Back Cover	If Side Air Bag(s) Deployed. If not deployed, visually inspect seat back cover and top trim cover of the airbag modules for deformation or distortion as a result of damage. Replace if deformation or distortion is found.	Inspect	Inspect	Replace	Inspect
Seat Side Air Bag	If Deployed	—	—	Replace	Replace
Seat Side Air Bag Mounting Points and Hardware	If Side Air Bag(s) Deployed	—	—	Inspect	Inspect
Seat Adjuster	—	—	—	Inspect	—
Seat Back Frame	—	—	—	Inspect	—
Seat Cushion Frame	—	—	—	Inspect	—
Seat Cushion Side Covers and Switches	On Side of Impact	—	—	Inspect	—
Seat Recliner and Cover	If Equipped	—	—	Inspect	—
Seat Belts					

Seat Belt System	This applies to seat belt systems in use by people of adult size, seat belt systems used to secure child restraints, infant carriers, and booster seats, including LATCH system and top tether anchorages. **Do NOT replace single seat belt system components in vehicles that have been in a collision as described above. Always replace the entire seat belt system with the buckle, guide, and retractor assembly, which includes the latch and webbing material.** 1. Replace any seat belt system that was in use during the collision serious enough to deploy any automatic restraint device such as air bags and seat belt pretensioners. 2. Replace any seat belt system that has torn, worn, or damaged components. 3. Replace any seat belt system if you observe the words "REPLACE" or "CAUTION", or if a yellow tag is visible. Do not replace a seat belt if only the child seat caution label is visible. 4. Replace any seat belt system if you are doubtful about its condition.	Inspect	—	—	—
Seat Belt Anchor and/or Retractor Pretensioners	—	Inspect	Replace	Replace	Replace
Seat Belt Anchor and/or Retractor Pretensioners Mounting Points and Hardware	Visually verify the seat belt retractor units are securely attached and the seat belt anchor bolts are secure.	Inspect	Inspect	Inspect	Inspect
Sensing and Diagnostic Module (SDM)					
Inflatable Restraint Sensing and Diagnostic Module (SDM) or Restraints Control Module (RCM)	Replace only if module has set DTC B0052 (or other related SDM DTCs) or DTC B1A33 (or other related RCM DTCs) and will not clear.	—	Replace	Replace	Replace
Inflatable Restraint Sensing and Diagnostic Module (SDM) or Restraints Control Module (RCM) Mounting Points and Hardware	—	—	Inspect	Inspect	Inspect

Section 7

Transmission

Shift Lock Control **7-2**
Schematic and Routing Diagrams **7-2**
Shift Lock Control Schematics 7-3

Transmission

Shift Lock Control

Schematic and Routing Diagrams

7085812
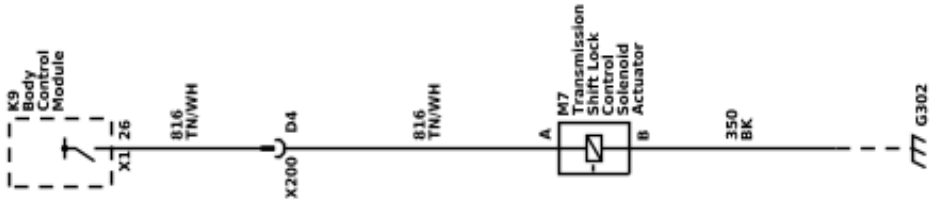
Shift Lock Control Schematics (Shift Lock Control)